DEPARTMENT OF THE AIR FORCE
377TH AIR BASE WING (AFGSC)

RECEIVED
APR 18 2019
NMED
Hazardous Waste
Bureau

APR 08 2019

Colonel Richard W. Gibbs, USAF
Commander
377th Air Base Wing
2000 Wyoming Blvd SE
Kirtland AFB NM 87117

John Kieling, Bureau Chief
Hazardous Waste Bureau
New Mexico Environment Department (NMED)
2905 Rodeo Park Drive East, Building 1
Santa Fe NM 87505-6303

Dear Mr. Kieling

Attached please find the *Ethylene Dibromide In Situ Biodegradation Pilot Test Report, Bulk Fuels Facility, Solid Waste Management Units ST-106 and SS-111*, Kirtland Air Force Base, New Mexico, dated April 2019. This report was prepared to describe activities and data associated with the pilot test conducted at the Bulk Fuels Facility on Kirtland Air Force Base in accordance with the New Mexico Environment Department letter dated February 25, 2019.

If you have any questions or concerns, please contact Mr. Scott Clark at (505) 846-9017 or at scott.clark@us.af.mil or Mr. Sheen Kottkamp at (505) 846-7674 or at sheen.kottkamp.1@us.af.mil.

Sincerely

Richard W. Gibbs

RICHARD W. GIBBS, Colonel, USAF
Commander

Attachment:
Ethylene Dibromide In Situ Biodegradation Pilot Test Report, Bulk Fuels Facility, Solid Waste Management Units ST-106 and SS-111, Kirtland Air Force Base, New Mexico, dated April 2019; 2 Hard Copies/2 CDs

NMED-(Pruett), 1 Hard copy and CD
NMED-OOTS (MCQuillan), letter and CD
NMED GWQB (Hunter), letter and CD
EPA Region 6 (King, Ellinger), letter and CD
COA (Faris), letter and CD
ABCWUA (Shean), letter and CD
SAF-IEE (Lynnes), electronic only
AFCEC/CZ (Renaghan, Clark, Kottkamp), electronic only
USACE Office (Moayyad, Phaneuf, Dreeland, Sanchez, Salazar, Kunkel, Ellender), electronic only
Public Info Repository, Administrative Record/Information Repository (AR/IR) and File

KAFB4062

KIRTLAND AIR FORCE BASE
ALBUQUERQUE, NEW MEXICO

ETHYLENE DIBROMIDE IN SITU BIODEGRADATION PILOT TEST REPORT
BULK FUELS FACILITY
SOLID WASTE MANAGEMENT UNITS ST-106 AND SS-111
KIRTLAND AIR FORCE BASE, NEW MEXICO

April 2019

377 MSG/CEI
2050 Wyoming Boulevard SE
Kirtland Air Force Base, New Mexico 87117-5270

KIRTLAND AIR FORCE BASE
ALBUQUERQUE, NEW MEXICO

ETHYLENE DIBROMIDE IN SITU BIODEGRADATION PILOT TEST REPORT

BULK FUELS FACILITY
SOLID WASTE MANAGEMENT UNITS ST-106 AND SS-111

April 2019

Prepared for
U.S. Army Corps of Engineers
Omaha District
1616 Capitol Avenue
Omaha, Nebraska 68102

USACE Contract No. W9128F-12-D-0003
Task Order 0025

Prepared by
Aptim Federal Services, LLC
17 Princess Road
Lawrenceville, New Jersey 08648

NOTICE

This Report was prepared for the U.S. Army Corps of Engineers by Aptim Federal Services, LLC for the purpose of aiding in the implementation of a final remedial action plan under the U.S. Air Force Environmental Restoration Program. As the Report relates to actual or possible releases of potentially hazardous substances, this Report's release prior to a final decision on remedial action may be in the public's interest. The limited objectives of this Report and the ongoing nature of the Environmental Restoration Program, along with the evolving knowledge of site conditions and chemical effects on the environment and health, must be considered when evaluating this Report since subsequent facts may become known that may make this Report premature or inaccurate.

Government agencies and their contractors registered with the Defense Technical Information Center (DTIC) should direct requests for copies of this Report to DTIC, Cameron Station, Alexandria, Virginia 22304-6145.

Non-government agencies may purchase copies of this document from National Technical Information Service, 5285 Port Royal Road, Springfield, Virginia 22161.

REPORT DOCUMENTATION PAGE	Form Approved OMB No. 0704-0188

Public reporting burden for this collection of information is estimated to average 1 hour per response, including the time for reviewing instructions, searching existing data sources, gathering and maintaining the data needed, and completing and reviewing the collection of information. Send comments regarding this burden estimate or any other aspect of this collection of information, including suggestions for reducing this burden, to Washington Headquarters Services, Directorate for Information Operations and Reports, 1215 Jefferson Davis Highway, Suite 1204, Arlington, VA 22202-4302, and to the Office of Management and Budget, Paperwork Reduction Project (0704-0188), Washington, DC 20503.

1. AGENCY USE ONLY	2. REPORT DATE April 2019	3. REPORT TYPE AND DATES COVERED Ethylene Dibromide In Situ Biodegradation Pilot Test Report

4. TITLE AND SUBTITLE	5. FUNDING NUMBERS
Ethylene Dibromide In Situ Biodegradation Pilot Test Report, Bulk Fuels Facility, Solid Waste Management Units ST-106 and SS-111, Kirtland Air Force Base, Albuquerque, New Mexico	USACE Contract No. W9128F-12-D-0003 Task Order 0025
6. AUTHOR Aptim Federal Services, LLC	
7. PERFORMING ORGANIZATION NAME(S) AND ADDRESS(ES) Aptim Federal Services, LLC 17 Princess Road Lawrenceville, New Jersey 08648	8. PERFORMING ORGANIZATION REPORT NUMBER KAFB-019-0001
9. SPONSORING/MONITORING AGENCY NAME(S) AND ADDRESS(ES) USACE Omaha District 1616 Capitol Avenue Omaha, Nebraska 68102 Project Engineer: Matthew Ellender	10. SPONSORING/MONITORING AGENCY REPORT NUMBER NA

11. SUPPLEMENTARY NOTES

NA

12a. DISTRIBUTION/AVAILABILITY STATEMENT NA	12b. DISTRIBUTION CODE NA

13. ABSTRACT (Maximum 200 words)

This Ethylene Dibromide In Situ Biodegradation Pilot Test Report has been prepared to describe activities and data associated with the ethylene dibromide (EDB) *in situ* biodegradation pilot test. The pilot test described herein was conducted to investigate anaerobic *in situ* bioremediation (ISB) of 1,2-dibromoethane (i.e., ethylene dibromide; EDB). ISB, with and without bioaugmentation, is a common remedial approach to treat chlorinated solvents such as trichloroethene and is a promising technology for promoting the degradation of EDB to nontoxic products. The efforts described herein evaluated the extent to which potential treatment amendments for *in situ* biostimulation enhanced anaerobic EDB biodegradation processes.

EDB degradation was evident during the pilot test with a greater than three-log reduction (99.9 percent) to below the United States Environmental Protection Agency maximum contaminant level of 0.05 micrograms per liter at wells KAFB-106MW2-S and KAFB-106064 after biostimulation efforts. EDB degradation was evident through comparison with benzene and toluene concentrations, and the production of EDB degradation products ethene, ethane, and bromide suggested that this degradation occurred by reductive debromination. Higher EDB $\delta^{13}C$ values (observed to be as high as +5‰ or per mile) provided additional isotopic evidence of EDB degradation.

14. SUBJECT TERMS	15. NUMBER OF PAGES 133
Bulk Fuels Facility; Pilot Test Report; well installation; well development; surveying; treatment system design, construction, and operation; groundwater sampling; analytical results.	16. PRICE CODE NA

17. SECURITY CLASSIFICATION OF REPORT	18. SECURITY CLASSIFICATION OF THIS PAGE	19. SECURITY CLASSIFICATION OF ABSTRACT	20. LIMITATION OF ABSTRACT
UNCLASSIFIED	UNCLASSIFIED	UNCLASSIFIED	NA

40 CFR 270.11
DOCUMENT CERTIFICATION
APRIL 2019

I certify under penalty of law that this document and all attachments were prepared under my direction or supervision according to a system designed to assure that qualified personnel properly gather and evaluate the information submitted. Based on my inquiry of the person or persons who manage the system, or those persons directly responsible for gathering the information, the information submitted is, to the best of my knowledge and belief, true, accurate, and complete. I am aware that there are significant penalties for submitting false information, including the possibility of fines and imprisonment for knowing violations.

Richard W. Gibbs

RICHARD W. GIBBS, Colonel, U.S. Air Force
Commander, 377th Air Base Wing

8 APR 19
Date

This document has been approved for public release.

KIRTLAND AIR FORCE BASE
Public Affairs, 377th Air Base Wing

5 Apr 19
Date

PREFACE

This Ethylene Dibromide In Situ Biodegradation Pilot Test Report has been prepared by Aptim Federal Services, LLC (APTIM) for the U.S. Army Corps of Engineers (USACE), under Contract No. W9128F-12-D-0003, Task Order 0025. It pertains to the Kirtland Air Force Base Bulk Fuels Facility, Solid Waste Management Units ST-106 and SS-111 located in Albuquerque, New Mexico. This report was prepared in accordance with applicable federal, state, and local laws and regulations.

This Pilot Test Report presents and describes all activities and data associated with the ethylene dibromide *in situ* biodegradation pilot test. Mr. Larry Woscyna is the Contracting Officer's Representative for the USACE Omaha District, Mr. Matthew Ellender is the USACE Omaha District Project Engineer; Mr. Scott Clark is the Kirtland Air Force Base Restoration Interim Section Chief; and Mrs. Kathleen Romalia is the APTIM Project Manager.

Kathleen E Romalia

Kathleen Romalia
Aptim Federal Services, LLC
Project Manager

CONTENTS

Section **Page**

ACRONYMS AND ABBREVIATIONS vii

EXECUTIVE SUMMARY ES-1

1. INTRODUCTION 1-1

1.1 Pilot Test Objectives 1-1
1.2 Site Description 1-2
1.3 Site History 1-2
1.4 Site Conditions 1-3
1.5 Report Organization 1-4

2. PILOT SYSTEM DESIGN AND CONSTRUCTION 2-1

2.1 Permitting 2-1
2.2 Utility Clearance 2-2
2.3 Well Design and Installation 2-3
2.3.1 Groundwater Monitoring Well Installation 2-5
2.3.2 Borehole Deviation and Borehole Abandonment 2-5
2.3.3 Extraction Well Installation 2-6
2.3.4 Injection Well Installation 2-7
2.3.5 Extraction and Injection Well Vaults 2-7
2.4 Well Development 2-8
2.4.1 Groundwater Monitoring Well Development 2-8
2.4.2 Extraction Well Development 2-9
2.4.3 Injection Well Development 2-9
2.4.4 Pump Installation 2-10
2.5 Well Survey 2-12
2.6 Recirculation Pilot System Equipment and Materials 2-12

3. PILOT SYSTEM OPERATION AND MONITORING 3-1

3.1 Pilot System Start-up Testing 3-1
3.2 Baseline Sampling 3-2
3.3 Phase 1 – Tracer Testing 3-2
3.4 Phase 2 – Biostimulation 3-6
3.5 Phase 3 – Biostimulation 3-9
3.6 Phase 4 – Long-Term Monitoring 3-11
3.7 NAPL Sampling 3-12
3.8 Sample Analysis 3-13
3.9 Sample Documentation 3-15
3.10 Quality Control 3-15
3.11 Waste Management 3-16
3.11.1 Soil IDW 3-16
3.11.2 Liquid IDW – Development and Decontamination 3-17
3.11.3 Liquid IDW – Purge Water 3-18

4. PILOT TEST RESULTS 4-1

4.1 Baseline Conditions 4-1
4.2 Amendment Distribution 4-2
4.2.1 Tracer Distribution During Phase 1 4-2
4.2.2 Tracer Distribution During Phase 2 and 3 4-4
4.2.3 Distribution of Fermentable Substrate 4-7
4.3 Microbial Analysis 4-8
4.4 Geochemistry 4-10
4.5 Selected Contaminants of Interest 4-13
4.5.1 Benzene and Toluene 4-13
4.5.2 EDB 4-16

5. CONCLUSIONS 5-1

5.1 Conclusions 5-1

6. REFERENCES 1

APPENDICES

Appendix A Site Photographs

Appendix B Approved Permits

Appendix C Well Installation Forms

Appendix D Borehole Abandonment and Deviation Documentation

Appendix E Final Pilot Test System Design Drawings and Specification Sheets

E-1. Final Design Drawings
E-2. Specification Sheets

Appendix F Field Sampling Records

F-1. Groundwater Purge Logs
F-2. Sample Collection Logs

Appendix G Data Quality Evaluation Report and Data Packages

G-1. Data Quality Evaluation Report
G-2. Data Packages

Appendix H Waste Disposal Documentation

H-1. Soil IDW Disposal Letters and Approvals
H-2. Corrective Action Report
H-3. Non-Hazardous Waste Manifests
H-4. Hazardous Waste Manifests
H-5. Waste Profiles

FIGURES

Figure

1 Area Location Map

2 Site Location Map

3 Concentrations of EDB in Anaerobic Microcosms Prepared with Aquifer Samples Collected from the BFF Source Area

4 Pilot Test Well Layout

5 Recirculation and Amendment System Piping and Instrument Diagram

6 Process Flow Diagram

7 Recirculation Groundwater Elevations

8 EDB Concentrations for Baseline and Phase 4 Sampling Events

9 Fluoroscein Concentrations – Shallow Wells

10 Fluoroscein Concentrations – Intermediate Wells

11 δ^2H Concentrations – Shallow Wells

12 δ^2H Concentrations – Intermediate Wells

13 Iodide Concentrations – Shallow Wells

14 Iodide Concentrations – Intermediate Wells

15 Lactic Acid Concentrations – All Wells

16 Acetic Acid Concentrations – All Wells

17 Propionic Acid Concentrations – All Wells

18 EBAC Concentrations – All Wells

19 APS Concentrations – All Wells

20 MGN Concentrations – All Wells

21 DHBt Concentrations – All Wells

22 DCM Concentrations – All Wells

23 DHG Concentrations – All Wells

FIGURES (concluded)

Figure

24 DSB Concentrations – All Wells

25 Dissolved Oxygen Concentrations – All Wells

26 Sulfate Concentrations – All Wells

27 Iron Concentrations – All Wells

28 Methane Concentrations – All Wells

29 Benzene Concentrations – All Wells

30 Toluene Concentrations – All Wells

31 EDB Concentrations – All Wells

32 EDB Reduction – All Wells

33 Ethene/Ethane EDB Equivalent – Shallow Wells

34 Ethene/Ethane EDB Equivalent – Intermediate Wells

35 Bromide vs. Chloride – All Wells

36 Br/Cl Ratio – Shallow Wells

37 Br/Cl Ratio – Intermediate Wells

38 EDB $\delta^{13}C$ - Shallow Wells

TABLES

Table

1 Well Completion and Survey Summary

2 Timeline of System Operation

3 Summary of Field Water Quality Measurements

4 Groundwater Sampling Frequency, Parameters, and Methods

5 Manual Water Level Measurements

6 Amendment Batching Summary

7 Analytical Data Table for KAFB-106063

8 Analytical Data Table for KAFB-106064

9 Analytical Data Table for KAFB-106EX1

10 Analytical Data Table for KAFB-106EX2

11 Analytical Data Table for KAFB-106IN1

12 Analytical Data Table for KAFB-106MW1-I

13 Analytical Data Table for KAFB-106MW1-S

14 Analytical Data Table for KAFB-106MW2-I

15 Analytical Data Table for KAFB-106MW2-S

16 Measures of Tracer Distribution during Phase 1

17 Contaminant Reduction during Test Phases

ACRONYMS AND ABBREVIATIONS

%	percent
‰	per mile
µg/L	microgram per liter
µm	micron
$\delta^{13}C$	delta carbon-13 (measure of carbon isotope composition)
$\delta^{2}H$	delta deuterium (measure of hydrogen isotope composition)
^{13}C	carbon-13, stable isotope of carbon
$^{2}H_2O$	deuterium oxide, deuterated water
AFB	Air Force Base
APS	sulfate reducing bacteria
APTIM	Aptim Federal Services, LLC
ARCH	Air Rotary Casing Hammer
AvGas	aviation gasoline
BFF	Bulk Fuels Facility
bgs	below ground surface
Calcon	Calcon Systems Inc.
cells/mL	cells per milliliter
CSIA	compound-specific isotope analysis
DAP	diammonium phosphate
DCM	*Dehalobacter* DCM
DHG	*Dehalogenimonas* spp.
DHBt	*Dehalobacter* spp.
DO	dissolved oxygen
DSB	*Desulfitobacterium* spp.
DTIC	Defense Technical Information Center
EBAC	total eubacteria
EDB	ethylene dibromide/1,2-dibromoethane
EPA	United States Environmental Protection Agency
Fe	iron
FCV	flow control valve
FFOR	Former Fuel Offloading Rack
gpm	gallon per minute
IDW	investigation-derived waste
ISB	*in situ* bioremediation
JP-4	jet propellant fuel grade 4
JP-8	jet propellant fuel grade 8

ACRONYMS AND ABBREVIATIONS (concluded)

KAFB	Kirtland Air Force Base
KI	potassium iodide
MCL	maximum contaminant level
MGN	methanogens
mg/kg	milligram per kilogram
mg/L	milligram per liter
NAPL	non-aqueous phase liquid
NMED	New Mexico Environment Department
OOM	order of magnitude
ORP	oxidation-reduction potential
OSE	Office of the State Engineer
P&ID	piping and instrumentation diagram
Pace	Pace Analytical®
PID	photo ionization detector
PM	Project Manager
PVC	polyvinylchloride
Report	Ethylene Dibromide In Situ Biodegradation Pilot Test Report
SCADA	Supervisory Control and Data Acquisition
SWMU	Solid Waste Management Unit
USACE	U.S. Army Corps of Engineers
USGS	U.S. Geological Survey
VOC	volatile organic compound
Work Plan	Ethylene Dibromide In Situ Biodegradation Pilot Test Work Plan

EXECUTIVE SUMMARY

This Ethylene Dibromide In Situ Biodegradation Pilot Test Report (Report) was prepared to describe activities and data associated with the pilot test conducted at the Bulk Fuels Facility (BFF) on Kirtland Air Force Base (AFB) in accordance with the New Mexico Environment Department (NMED) letter dated February 25, 2019 (NMED, 2019). The BFF site was the location of an accidental leak of aviation gasoline and jet propellant fuel grades 4 and 8 that was discovered in 1999. Based on historical Air Force fuel usage, aviation gasoline containing ethylene dibromide/1,2-dibromoethane (EDB) as a lead scavenger would have been in use from approximately the 1940s to 1975 (United States Army Corps of Engineers [USACE], 2011a). The investigation and remediation of the BFF leak (Solid Waste Management Units ST-106 and SS-111) is being implemented pursuant to the Resource Conservation and Recovery Act (RCRA) corrective action provisions in Part 6 of the Kirtland AFB Hazardous Waste Treatment Facility Operating Permit (Permit No. NM9570024423, referred to as the RCRA Permit) (NMED, 2010). This pilot test was performed pursuant to the NMED-approved Ethylene Dibromide In Situ Biodegradation Pilot Test Work Plan (Work Plan; USACE, 2016a) and Phase 3 Notification Letter (USACE, 2018a).

This stand-alone Executive Summary briefly summarizes the pilot test objectives, construction activities, results, and conclusions of this Report. Sections 1 through 3 of the main report describe the activities performed during the implementation of the pilot test. Section 4 describes pilot test analytical results and performance. Section 5 provides conclusions.

The pilot test was conducted to investigate anaerobic *in situ* bioremediation of EDB in groundwater associated with the BFF site. *In situ* bioremediation, with and without bioaugmentation, is a common remedial approach to treat chlorinated solvents such as trichloroethene and is a promising technology for promoting the degradation of EDB to nontoxic products. The pilot test was primarily designed to evaluate

the extent to which potential treatment amendments for *in situ* biostimulation and bioaugmentation enhance anaerobic EDB biodegradation processes.

Site preparation activities, mobilization, and installation of the Pilot Test System were performed from September 2016 through May 2017. Construction of the Pilot Test System consisted of the installation and development of seven wells; construction of underground piping, conduit, and direct buried electrical lines, and the installation of the system control building with required electrical service and components.

The pilot test utilized one injection, two extraction, and six monitoring wells, including existing monitoring wells KAFB-106064 and KAFB-106063 (nine wells total) (Figure ES-1). Well KAFB-106IN1 was installed and used as an injection well for recirculated groundwater and amendment injection; wells KAFB-106EX1 and KAFB-106EX2 were installed and used as groundwater extraction wells; and existing wells KAFB-106064 and KAFB-106063, and new nested wells KAFB-106MW1-S, KAFB-106MW1-I, KAFB-106MW2-S, and KAFB-106MW2-I were used as monitoring wells. The new shallow groundwater monitoring wells (KAFB-106MW1-S and KAFB-106MW2-S) are screened with 15 feet above the static water table and 20 feet extending below the water table, as measured at the time of well installation. The new intermediate wells (KAFB-106MW1-I and KAFB-106MW2-I) were installed within the intermediate groundwater zone are screened 35 feet below the water table.

The system for amending and recirculating groundwater was designed by Aptim Federal Services, LLC, together with subcontractors, and was fabricated by Calcon Systems Inc. The system is contained within a 20-foot long Conex box. The Conex box has a partition wall, separating the enclosure into two spaces. The smaller of the two spaces is the system control room that houses the supervisory control and data acquisition system with integrated computer, electrical control panel, Baski flow control valve controls and associated nitrogen cylinder, and a combination air conditioner/heater. The larger space houses

system process components. Shakedown testing was performed on May 16 through 17, 2017 prior to full system start-up.

The pilot test was implemented in four phases, each briefly described below:

- Phase 1—Evaluation of baseline conditions and the distribution of recirculated water using tracer amendments.
- Phase 2—Evaluation of biostimulation in the subsurface after distribution of treatment amendments in recirculated groundwater.
- Phase 3— Additional evaluation of biostimulation in the subsurface after distribution of treatment amendments in recirculated groundwater.
- Phase 4—Continued long-term monitoring with no active extraction/injection.

Groundwater samples were collected intermittently at extraction, injection, and the six groundwater monitoring wells during the active and the passive portions of the phases, except for Phase 4, which did not include an active recirculation portion. Samples were sent to numerous analytical laboratories for analysis.

Per the Work Plan (USACE, 2016a), Phase 3 was to consist of both biostimulation and bioaugmentation with a known debrominating culture (SDC-9); however, after review of field results from both Phase 1 and Phase 2, it was determined that bioaugmentation was not yet warranted. Due to the success of biostimulation during Phase 2, Phase 3 was modified to further evaluate biostimulation and a Phase 3 Notification Letter was submitted to the NMED on July 26, 2018. The modified Phase 3 was approved by the NMED in a letter dated August 7, 2018 (NMED, 2018).

Legend

- Existing Monitoring Well
- Pilot Test Injection/Extraction Well
- Pilot Test Monitoring Well
- Fence Line
- Natural Gas Line
- Wastewater Line
- Water Line
- Electrical Cable Line
- Construction Fence Area
- Truck Exit Route
- Pilot Test Trench Location for Water Pipe and Subsurface Electrical
- Pilot Test System Location
- Pilot Test Existing Electrical Tie-in
- Electrical Service Line
- Storage Shed

KAFB = Kirtland Air Force Base

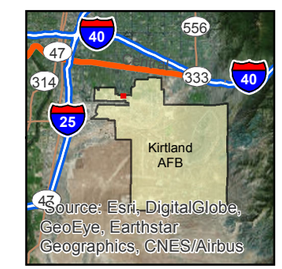

SITE LOCATION

Revision Date: 03/18/19

N

0 15 30 60

Feet

1 inch = 60 feet

Projection : NAD83 State Plane New Mexico Central FIPS3002 Feet

ETHYLENE DIBROMIDE IN SITU BIODEGREDATION
PILOT TEST REPORT
KIRTLAND AIR FORCE BASE, NEW MEXICO

FIGURE ES-1

SITE LOCATION MAP

H:\Kirtland_AFB\GIS_Documents\Project_Maps_bak\EDIB_Pilot_Test_Report\ECarpioESRI Data Solutions TeamKAFB_E002_est_electr_zoom.mxd 03/18/19

The results for the four phases of the pilot test are summarized below:

- EDB concentrations at shallow monitoring wells during the baseline evaluation ranged from 20.1 micrograms per liter (µg/L) at Kirtland AFB (KAFB)-106IN1 to 432 µg/L at KAFB-106MW1-S, and among the intermediate wells EDB was only detected at KAFB-106MW2-I with a concentration of approximately 0.1 µg/L. EDB concentrations are shown on Figure ES-2. Baseline microbial results indicated that the subsurface was biologically active prior to pilot test activities.

- EDB concentrations at shallow monitoring wells during the Phase 1 (tracer test) recirculation period ranged from 50.4 µg/L (KAFB-106EX1) to 137 µg/L (KAFB-106EX2) (Figure ES-2). EDB concentrations at the shallow monitoring wells decreased during the following Phase 1 passive period, with EDB reductions of approximately 75 percent (%) observed at wells KAFB-106064 (20.1 µg/L), KAFB-106EX1 (12.9 µg/L), and KAFB-106MW2-S (15 µg/L) after the one-month passive period (Figure ES-2). Biostimulation amendments were not added during Phase 1. The results from tracer test during Phase 1 indicated that the targeted treatment zone encompassing the shallow groundwater monitoring wells were hydraulically connected with the injection well. Distribution of tracers to groundwater sampled by monitoring wells nearest to the injection well (KAFB-106MW2-S and KAFB-106064) occurred within 5 days of operation, suggesting a high likelihood of successfully distributing biostimulation amendments to favor reductive debromination of EDB.

- During the Phase 2 (biostimulation) recirculation period, the range of EDB concentrations observed at shallow monitoring wells was less variable, ranging from 66.4 µg/L at KAFB-106MW1-S to a maximum of 90.9 µg/L at KAFB-106EX2 (Figure ES-2). EDB was detected at the intermediate monitoring wells during the Phase 2 recirculation period. Except for KAFB-106EX2, EDB concentrations decreased during the Phase 2 passive period by

approximately 90% or more with concentrations down to below detection limits (KAFB-106IN1, KAFB-106MW2-S).

- During the Phase 3 (biostimulation) recirculation period, the range of EDB concentrations observed at shallow monitoring wells was more variable, ranging from approximately 3 µg/L at KAFB-106064 to a maximum of 97 µg/L KAFB-106EX2 (Figure ES-2). Except for KAFB-106EX2, EDB concentrations during the subsequent passive period decreased by 95% or more relative to maximums observed during the preceding recirculation period, with concentrations ranging down to 0.019 µg/L (KAFB-106MW2-S).

- No significant rebound in EDB concentrations was noted during the Phase 4 sampling event. EDB decreased by an additional 80% at KAFB-106MW1-S since the last passive sampling event of Phase 3.

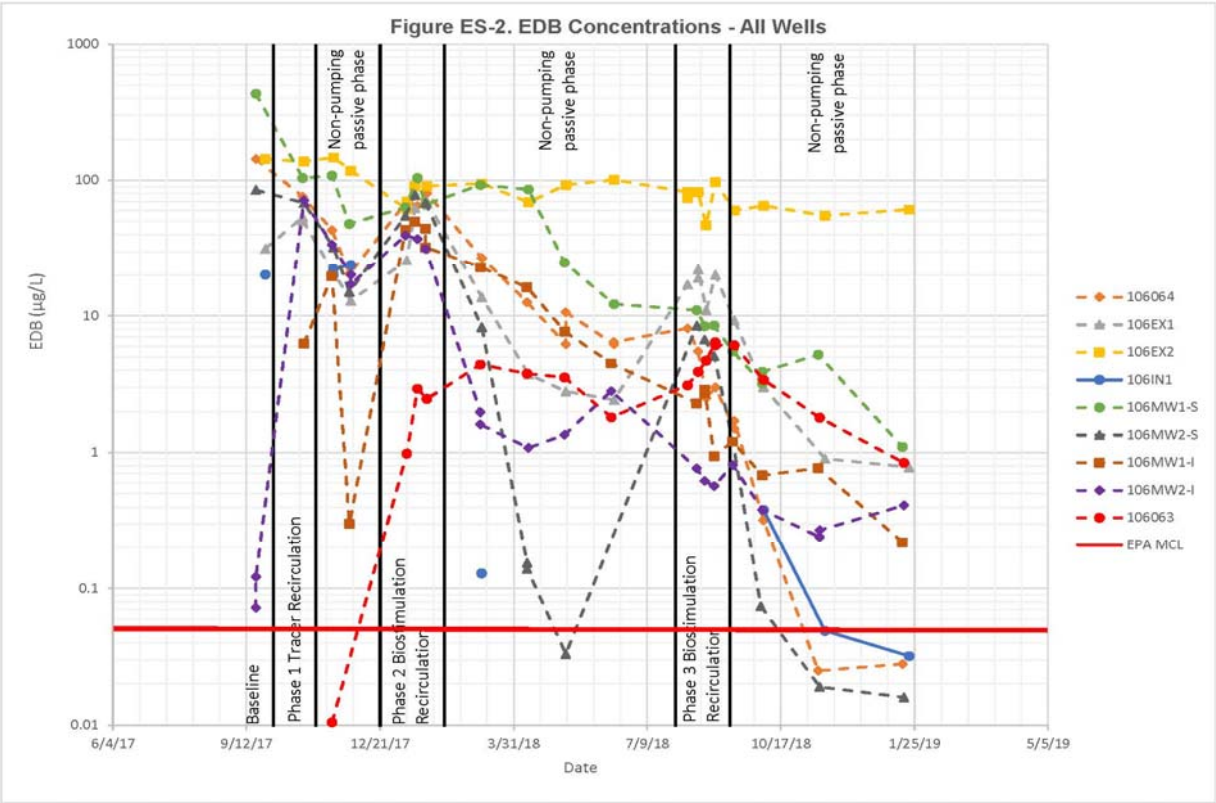

EDB degradation was evident during the pilot test with a greater than three-log reduction (99.9%) to below the United States Environmental Protection Agency (EPA) maximum contaminant level of 0.05 µg/L (EPA, 2009) at wells KAFB-106MW2-S and KAFB-106064 after biostimulation efforts. EDB degradation was evident through comparison with benzene and toluene concentrations, and the production of EDB degradation products ethene, ethane, and bromide suggested that this degradation occurred by reductive debromination. Dissolved oxygen, sulfate, iron, and methane concentrations observed throughout much of the pilot test indicated that bulk anaerobic conditions generally considered to be necessary for reductive debromination were present. Higher EDB delta carbon-13 ($\delta^{13}C$) values (observed to be as high as +5 per mille) provided additional isotopic evidence of EDB degradation.

1. INTRODUCTION

This *Ethylene Dibromide In Situ Biodegradation Pilot Test Report* (Report) has been prepared by Aptim Federal Services, LLC (APTIM) for the U.S. Army Corps of Engineers (USACE), Omaha District, under Contract No. W9128F-12-D-0003, Task Order 0025. The test described in this Report was implemented at the Kirtland Air Force Base (AFB) Bulk Fuels Facility (BFF) site, Solid Waste Management Units (SWMUs) ST-106 and SS-111. The investigation and remediation of the BFF leak (SWMUs ST-106 and SS-111) is being implemented pursuant to the Resource Conservation and Recovery Act (RCRA) corrective action provisions in Part 6 of the Kirtland AFB Hazardous Waste Treatment Facility Operating Permit (Permit No. NM9570024423, referred to as the RCRA Permit) (New Mexico Environment Department [NMED], 2010). This pilot test was performed pursuant to the *Ethylene Dibromide In Situ Biodegradation Pilot Test Work Plan* (Work Plan; USACE, 2016a) and the Phase 3 Notification Letter (USACE, 2018a).

This pilot test was conducted to investigate anaerobic *in situ* bioremediation (ISB) of 1,2-dibromoethane (i.e., ethylene dibromide [EDB]). ISB, with and without bioaugmentation, is a common remedial approach to treat chlorinated solvents such as trichloroethene and is a promising technology for promoting the degradation of EDB to nontoxic products. This pilot test was designed to evaluate the use of *in situ* biostimulation to enhance anaerobic EDB biodegradation processes.

1.1 Pilot Test Objectives

The primary objective of this pilot test was to evaluate the extent to which potential treatment amendments for ISB enhance anaerobic EDB biodegradation processes. Evaluation of the test was completed through comprehensive groundwater sampling that assessed both direct and indirect indicators of EDB biodegradation.

1.2 Site Description

Kirtland AFB is located in Bernalillo County, in central New Mexico, southeast of and adjacent to the City of Albuquerque and the Albuquerque International Sunport (Figure 1). The approximate area of the base is 52,287 acres, and it is bordered by Albuquerque to the north and west, the Isleta Pueblo Reservation to the south, and the Cibola National Forest to the east. The BFF site is located in the northwestern part of Kirtland AFB, and is comprised of two SWMUs, designated as ST-106 and SS-111. The pilot test was performed near the EDB contaminant source in an undeveloped area just south of Randolph Road, at the location identified on Figure 2.

The pilot test area included groundwater injection, extraction, and monitoring wells installed near the existing monitoring well cluster that includes Kirtland AFB (KAFB)-106062, KAFB-106063, and KAFB-106064, approximately 300 feet to the east of Building 1024 (Figure 2). The water table at the test location occurs at approximately 480 feet below ground surface (bgs), and the pilot test groundwater wells are screened in the shallow and intermediate zones of the aquifer within the Santa Fe Group. Well screens of the shallow monitoring wells were placed to target the highest EDB concentrations (i.e., approximately the top 20 feet of the aquifer), located in a zone of inter-bedded sands and gravels with occasional finer layers, and groundwater extraction and injection primarily facilitated flow in the soil materials of greatest hydraulic conductivity.

1.3 Site History

The BFF site was the location of a historical, accidental release of aviation gasoline (AvGas) and jet propellant fuel grades 4 (JP-4) and 8 (JP-8). Historical aerial photography revealed that the area was used for fuel storage and processing as early as 1951 (CH2M HILL, 2001). From 1953 to late 1975, the primary fuel stored and used at the BFF was AvGas. The use of AvGas and JP-4 at Kirtland AFB was phased out in 1975 and 1993, respectively (USACE, 2011a). JP-8 was handled through the Former Fuel Offloading Rack (FFOR) until the leak was discovered in 1999.

Based on historical Air Force fuel usage, AvGas containing EDB as a lead scavenger would have been in use from approximately the 1940s to 1975. EDB is a suspected human carcinogen that was historically added to leaded fuels to prevent the build-up of lead oxide deposits in engines, including aircraft engines.

The fuels are thought to have leaked undetected over approximately 3 to 4 decades at the FFOR through leak points during fuel transfer. The released fuel migrated through the vadose zone to eventually reach the water table. The migration followed a disjointed, meandering path caused by subsurface heterogeneity, where frequent changes in the alluvial lithology and confining layers created preferential flow pathways. This resulted in non-uniform residual contamination of the vadose zone and measurable non-aqueous phase liquid (NAPL) on the surface of the underlying unconfined aquifer. The presence of NAPL fuel hydrocarbons on the water table indicated that substantial releases had occurred.

1.4 Site Conditions

The historical water table in the vicinity of Kirtland AFB was estimated to be approximately 350 feet bgs before extensive groundwater pumping from the regional aquifer occurred. Throughout the history of the BFF site, the water table has fallen due to groundwater pumping to supply drinking water to the residents of Albuquerque. The deepest depth to water, representing the lowest historical groundwater elevation, measured at groundwater wells in the BFF source area ranged from approximately 500 to 502 feet bgs in 2009. In recent years, the water table has been rising due to water-conservation efforts by the Albuquerque community and reduction of pumping of production wells by Albuquerque Bernalillo County Water Utility Authority. As a result, the current vadose zone at the BFF site is approximately 455 to 480 feet thick.

The background gradient at the pilot test location is small and pumping of wells and reinjection during pilot test operations induced gradients exceeding that of the background. Based on data reviewed for the pilot test design, the groundwater gradient in the pilot test area was less than 0.002 foot/foot (First Quarter

2016), and the direction of groundwater flow had shifted from north-northeast to a more east-southeast direction, likely due to continuing water-conservation practices and seasonal fluctuations, as discussed in the Second Quarter 2018 Quarterly Monitoring Report (USACE, 2018b).

Prior to the pilot test during quarterly sampling in 2014 and 2015, groundwater samples were collected from 13 monitoring wells to analyze the microbial community at Kirtland AFB using Microbial Insight's QuantArray-Chlor protocol. Four consecutive quarters of samples were collected from the 13 monitoring wells, from the Fourth Quarter 2014 through the Third Quarter 2015. The method of collection and analysis has been discussed in previous quarterly reports, which can be found on the Air Force Administrative Records site (http://afcec.publicadmin-record.us.af.mil/Search.aspx). Results indicated that microorganisms likely to dehalogenate EDB, or its chlorinated analog 1,2-dichloroethane, are present in the subsurface. Additionally, treatability testing using Kirtland AFB soil and groundwater showed that bioaugmentation with a known debrominating culture (SDC-9) significantly enhanced EDB degradation rates (Figure 3). These results indicated that ISB, by stimulating the activity of indigenous EDB-degrading organisms (i.e., biostimulation) or bioaugmenting with a debrominating culture (e.g., SDC-9), showed promise for enhancing EDB degradation at Kirtland AFB.

1.5 Report Organization

This Report contains a detailed summary of the pilot test implementation, including design considerations, field activities, and a comprehensive documentation of results. The remainder of this Report contains the following sections:

- Section 2 – Pilot System Design and Construction
- Section 3 – Pilot System Operation and Monitoring
- Section 4 – Pilot Test Results

- Section 5 – Conclusions

Figures, tables, and appendices are available following the body of this Report.

2. PILOT SYSTEM DESIGN AND CONSTRUCTION

Site preparation activities, mobilization, and installation of the Pilot Test System were performed from September 2016 through May 2017. Construction of the Pilot Test System consisted of well installation and development; installation of underground piping, conduit, and direct buried electrical lines; and installation of the system control building with required electrical service and components. Appendix A includes 20 representative photographs of various site activities.

2.1 Permitting

Prior to initiating construction activities, the following permits were obtained:

- Kirtland AFB Dig Permit (utility clearance)
- Kirtland AFB Civil Engineer Work Permit
- Office of the State Engineer (OSE) Drill and Install Permit
- OSE Change of Water Rights
- Albuquerque Environmental Health Department Fugitive Dust Permit

One dig permit (Air Force Form 103) was submitted to Kirtland AFB on July 20, 2016 for well installation and trenching for utilities associated with the system. The dig permit was approved on August 15, 2016, and a permit number was issued (1607-014).

Surface disturbances at the pilot test location totaled an area greater than ¾ acre and required submittal of a Fugitive Dust Permit Application, which was submitted to the Albuquerque Environmental Health Department on May 12, 2014, prior to initiation of excavation activities, in accordance with 20.11.20

New Mexico Administrative Code. The permit application was approved, and the Fugitive Dust Permit (6621-C) was issued on May 14, 2014.

Two separate permits to "Drill a Well with No Consumptive Use of Water" were submitted to the OSE for monitoring wells, and extraction and injection wells, respectively. Permits were issued for the monitoring wells on November 17, 2016 and for the extraction and injection wells on August 15, 2016. An "Application for Permit to Change an Existing Water Right" was also submitted to the OSE for the extraction and injection wells. The intention of the change of water rights permit was not to increase the allowable groundwater diversion described in RG-1579 through RG-1589, but rather to change the purpose of use to pollution control and recovery, and by adding places of use not currently described in the Kirtland AFB water rights (RG-1579 through RG-1589) for the extraction and injection wells. The change of water rights application was approved by the OSE on December 7, 2016.

Additionally, a Notice of Intent was submitted to the NMED Ground Water Quality Bureau on October 26, 2016 to determine whether a Discharge Permit was required, in accordance with the requirements found in 20.6.2.1201.A New Mexico Administrative Code. NMED Ground Water Quality Bureau determined that a Discharge Permit was not required for pilot test activities in a letter dated December 16, 2016. Appendix B includes all relevant permits.

2.2 Utility Clearance

Prior to the initiation of construction activities, a utility clearance was undertaken at the pilot test site by High Mesa Consulting Group (under subcontract to APTIM) in September 2016. Kirtland AFB utility representatives also performed a utility locate in order to process the submitted dig permits.

2.3 Well Design and Installation

The pilot test utilized one injection, two extraction, and six monitoring wells, including existing monitoring wells KAFB-106064 and KAFB-106063 (nine wells total). Well KAFB-106IN1 was installed and used as an injection well for recirculated groundwater, tracer, and amendment injection; wells KAFB-106EX1 and KAFB-106EX2 were installed and used as groundwater extraction wells; and existing wells KAFB-106064 and KAFB-106063, and new nested wells KAFB-106MW1-S, KAFB-106MW1-I, KAFB-106MW2-S, and KAFB-106MW2-I were used as groundwater monitoring wells. The pilot test wells, which included KAFB-106063, KAFB-106064, and the seven newly installed wells, are shown on Figure 2. A cross-sectional view illustrating the depths of the pilot test wells is shown on Figure 4.

The pilot test wells were sited to accommodate existing well infrastructure, site utilities, and to facilitate use of existing wells for monitoring. The two extraction wells were located 75 to 92 feet from the single injection well, as shown in Figure 2. As detailed later in this Report, the extraction wells were used to periodically recirculate groundwater during individual phases of the pilot test. The periods of active groundwater recirculation were designed to facilitate the distribution of amendments at the test location. Pumping was halted after sufficient amendment distribution and ISB treatment performance was monitored.

Existing monitoring wells KAFB-106063 (screened from 505 to 520 feet bgs, with top of screen approximately 25 feet below the water table) and KAFB-106064 (screened from 485 to 505 feet bgs, with top of screen approximately 5 feet below the water table) were used for groundwater monitoring during the pilot test, along with the other newly installed wells. The design and locations of the new wells were selected to evaluate EDB biodegradation and were located near the injection well to facilitate evaluating the impacts of biostimulation amendments. The four new monitoring wells were installed within two boreholes utilizing a nested configuration with two wells in each borehole in accordance with the Work

Plan (USACE, 2016a). Each borehole contained a shallow well with approximately 15 feet of screen in the vadose zone and 20 feet of screen in the aquifer, along with a deeper well (intermediate) with the top of a 10-foot screen set approximately 35 feet below the water table. Well screen intervals were isolated within the borehole using bentonite seals. Well construction diagrams are presented in Appendix C and general construction information for each well is summarized in Table 1. .

The two pairs of nested groundwater monitoring wells, two extraction wells, and one injection well were installed by Cascade Drilling (formerly National Exploration Wells & Pumps) using an Air Rotary Casing Hammer (ARCH) drill rig from January through March 2017.

During borehole advancement, soil cuttings were logged every 5 feet by the site geologist in accordance with the Unified Soil Classification System and American Standard Test Method International D1586-84. Soil drill cuttings from just above and in the saturated zone were screened for presence of NAPL and volatile organic compounds (VOCs) using a photo ionization detector (PID) to collect headspace measurements. Drill cuttings were also visually inspected for evidence of staining. PID readings were recorded on the soil boring logs (Appendix C). Staining was not observed during drilling activities; however, elevated PID readings and fuel-like odors were recorded from depths ranging from 473 feet bgs to 515 feet bgs at the wells.

Soil boring logs and well construction diagrams for monitoring, extraction, and injection wells installed during the pilot test are located in Appendix C. Soil borings were reviewed by a professional geologist and submitted to the OSE, in accordance with well permit requirements. Table 1 presents the completion details for the wells, including surveyed elevations and coordinates, and screen depths. All newly installed well locations are depicted on Figure 2.

2.3.1 Groundwater Monitoring Well Installation

Drilling of groundwater monitoring wells began on January 8, 2017, and was completed on February 16, 2017, using Cascade's ARCH drill rig. The four monitoring wells were installed within two boreholes, utilizing a nested well design in accordance with the Work Plan (USACE, 2016a). Well construction diagrams are presented in Appendix C and general construction information for each well is summarized in Table 1.

The two shallow monitoring wells (KAFB-106MW1-S and KAFB-106MW2-S) were constructed with 4-inch diameter, Schedule 80, polyvinyl chloride (PVC) riser pipe; and the two intermediate wells (KAFB-106MW1-I and KAFB-106MW2-I) were constructed with 3-inch diameter, Schedule 80, PVC riser pipe. The shallow and intermediate monitoring wells are nested within a telescoping borehole (13-3/8-inch upper and 11-3/4-inch lower diameter) to a depth of approximately 535 feet bgs. The shallow wells were fitted with 35-foot screens, set with 15 feet of screen in the vadose zone and 20 feet in the aquifer. The placement of the shallow monitoring well screens is intended to account for potential water table rise and allow for future monitoring and characterization activities after the completion of this pilot test in the event it is necessary to support the Corrective Measures Evaluation. The intermediate wells are fitted with 10-foot screens, with top of screen installed approximately 35 feet below the water table. Monitoring wells were equipped with a Schedule 80 PVC flush-threaded end cap installed below the screened interval. Additional well construction details are summarized in Table 1 and Appendix C.

2.3.2 Borehole Deviation and Borehole Abandonment

Upon achievement of total depth at the intended borehole location for KAFB-106MW2 (see Figure 6 of the Work Plan), borehole deviation was evaluated using several tools, including a Reflex EZ-Trac 6122 digital field instrument, a mechanical drift detector (Eastman Whipstock Eastco), and a gyroscopic deviation tool. The deviation was measured and evaluated while the drive casing was in the borehole prior to any well installation activities. The bottom of the borehole was measured to be deviated 26.35

feet, on an azimuth of 113.5 degrees from the north, using the gyroscopic deviation tool. The results from this gyroscopic deviation survey are included in Appendix D. The deviation was likely caused by the casing entry angle, coupled with a change in lithology at 225 feet bgs. Because this borehole was determined to have too large of a vertical deviation, no well infrastructure was installed, and it was abandoned on January 30, 2017. The Borehole Abandonment Activity Report (USACE, 2017a) and NMED approval letter have been included in Appendix D.

A second borehole was drilled for well KAFB-106MW2 approximately 10 feet to the northwest of the original, abandoned borehole. The deviation of this second borehole at 520 feet bgs was measured to be 89.7 degrees, which is approximately 3 feet from plumb, within the project specifications of less than 5 feet deviation over the entire depth of the borehole. All other pilot test boreholes were advanced with minor, acceptable deviations that met specifications.

2.3.3 Extraction Well Installation

Drilling of the extraction wells (KAFB-106EX1 and KAFB-106EX2) began on February 21, 2017 and was completed on March 12, 2017, using Cascade's ARCH drill rig. Well construction was completed in accordance with the Work Plan (USACE, 2016a). Well construction diagrams are presented in Appendix C and general construction information for each well is summarized in Table 1.

Each extraction well was installed to a total depth of approximately 537 feet bgs. To minimize the likelihood of aeration of extracted water through water table depression during system operation, the two extraction wells were installed with 15-foot long screens, the top of which are located 10 feet below the static groundwater level. Additional design and construction details for the extraction wells are provided in Table 1 and Appendix C. Well vaults are discussed in Section 2.3.5. A KSPI 700 submersible hydrostatic level transducer was installed in the 1.25-inch PVC drop tube at each extraction well.

2.3.4 Injection Well Installation

Drilling of the injection well (KAFB-106IN1) began on March 16, 2017 and was completed on March 20, 2017, using Cascade's ARCH drill rig. The injection well was constructed in the same manner as the extraction wells (see Section 2.3.3) in accordance with the Work Plan (USACE, 2016a); however, the injection well was installed with 20 feet of Schedule 80 PVC, 0.010-inch machine slotted screen, with the top of screen at the static groundwater level and extending 20 feet into the water column. A well construction diagram is presented in Appendix C and general construction information for the well is summarized in Table 1. Similar to the extraction wells, a KSPI 700 submersible hydrostatic level transducer was installed in the 1.25-inch PVC drop tube at the injection well.

2.3.5 Extraction and Injection Well Vaults

Fiberglass well vaults were installed to house extraction and injection wellheads, plumbing, fittings, and remote instrumentation necessary for operation and monitoring of the recirculation system. The floor of each vault consists of a poured concrete slab to provide water containment in the event of a leak. An integrated leak detection sensor was installed in each of the three well vaults, to automatically alert system operators and shut down the system in case of a leak. Each vault is approximately 5 feet long, 4 feet wide, and 3.8 feet deep. Each wellhead is located approximately 6 inches from the wall of the vault, and the top of the sanitary seal is located approximately 8 inches from the concrete floor.

Due to the location of the pilot test area being in an open field, traffic-rated vaults were not required. The upper edge of each vault extends approximately 4 inches above grade to protect the vault from surface runoff water intrusion, and has a hinged, locking cover. The well vaults are protected by four steel concrete bollards located at each corner of the vaults.

2.4 Well Development

Development of the groundwater monitoring, extraction, and injection wells was initiated after drilling and construction of all new wells was completed. Because development close to active drilling could cause poor or incomplete well development of the wells, NMED approved postponement of well development until after completion of all well installation activities in an email dated January 30, 2017 (NMED, 2017). Details regarding development of the monitoring, extraction, and injection wells are discussed in the sections below. Well development logs are provided in Appendix C.

2.4.1 Groundwater Monitoring Well Development

Groundwater monitoring well development was conducted in accordance with the Groundwater Investigation Work Plan (USACE, 2011b). Well development consisted of surging, bailing, and pumping to remove fine sediment using a small drill rig equipped with a surge block, stainless steel bailer, and electric submersible pump. Development was considered complete when a turbidity of less than 10 nephelometric turbidity units was achieved for water clarity, at least five well volumes were removed from the well plus any additional water that was added to the well during drilling, and field parameters had stabilized. Field water quality parameters were monitored at regular (5- to 10-minute) intervals during pumping and were considered stabilized when the following criteria were met for three consecutive readings: pH within 0.1 pH units, temperature within 1 degree Celsius, and specific conductance within 10 percent (%). Field data were recorded on well development forms by APTIM scientists, as presented in Appendix C.

Liquid investigation-derived waste (IDW) generated during monitoring well development was stored in 275-gallon totes. Waste management and disposal are discussed in Section 3.11.

2.4.2 Extraction Well Development

The extraction wells were developed using Cascade's well development rig. Wells were developed using a combination of methods including bailing, surging, and pumping. Initial bailing was conducted to remove sediment from the borehole and filter pack prior to beginning well development. After initial bailing, mechanical surging and over-pumping was conducted. Field tests for total solids (by Imhoff cone method) were performed, water levels were monitored, and water quality parameters including turbidity measurements were monitored during development. A constant rate test was performed after initial development was completed. Each well was pumped at approximately 20 gallons per minute (gpm) for a period of no less than 180 minutes. Water levels in the extraction well were manually measured to estimate the specific capacity. Additionally, water levels were manually measured in one observation well to monitor drawdown during constant rate testing.

The extraction wells were developed until well efficiency met at least 70% and had a specific capacity of 3 to 5 gpm per foot, at the discretion of the APTIM scientist. Field data were recorded on well development forms by APTIM scientists, as presented in Appendix C.

Purge water IDW generated during development was transferred to 19,000-gallon Baker storage tanks located within the construction yard. Waste management and disposal are discussed in Section 3.11.

2.4.3 Injection Well Development

The injection well was developed using Cascade's well development rig in the same manner as the extraction wells, as described in Section 2.4.2; however, based on the limited effectiveness and low specific capacity (2.3 gpm per foot) achieved after 120 minutes pumping at a rate of 20 gpm, jetting was conducted to further develop the well. The jetting device consisted of four jets and an extraction pump that was attached to the bottom of the device. Jetting was conducted in 1-foot intervals starting at the top of the saturated screen, working downward. Each 1-foot section of screen was jetted for at least 1 minute.

Imhoff cone and water level readings were collected at a frequency of one minute during jetting activities. A 120-minute constant rate test was performed at the injection well after jetting was completed and indicated that the specific capacity of the well had improved. Field data were recorded on well development forms by APTIM scientists, as presented in Appendix C.

Purge water IDW generated during development was transferred to 19,000-gallon Baker storage tanks located within the construction yard. Waste management and disposal are discussed in Section 3.11.

2.4.4 Pump Installation

Dedicated stainless steel Geotech bladder sampling pumps were originally installed in each of the six groundwater monitoring wells being used for the pilot test (KAFB-106064, KAFB-106063, KAFB-106MW1-S, KAFB-106MW1-I, KAFB-106MW2-S, and KAFB-106MW2-I) in March 2017. Multiple failure points were observed on the Geotech pumps during initial pump testing. After numerous unsuccessful attempts to pull, repair, and/or replace faulty pumps, a decision was made to replace the pumps with QED MicroPurge® Model P1101HM bladder pumps with PVC bodies. These new QED pumps were installed in the monitoring wells in September 2017 and baseline samples were recollected (Section 3.2). No operational issues were observed from that point forward, except for minor decreases observed in discharge volumes. Decreased discharge volume is common with bladder pumps as the Teflon™ bladder creases overtime with use and is not able to open to full capacity during recharge/filling.

The QED bladder pumps were hung on a poly-coated stainless steel hanging cable such that the pump intake area is set at approximately the middle point of the saturated screen interval. The top of the pump string includes a single aluminum well cap with access to the discharge line, hanging cable, and air-line. This hanging well cap fits into the top of the sanitary well seal. Well tubing is twin-bonded, Teflon™-lined polyethylene tubing and consists of a ¼-inch outside diameter air supply line and a 3/8-inch outside

diameter water discharge line. During pump installation at KAFB-106MW1-S, measurable NAPL was detected. A discussion of the NAPL and sampling that occurred is discussed in Section 3.7.

In March 2017 following the successful well development, multi-stage centrifugal stainless steel submersible pumps (Grundfos 25S50-26, 5.5 horsepower) were installed in each extraction well. The extraction well pump intakes were set at 497 feet bgs, approximately 20 feet below the water table (as measured during well installation) and 10 feet above the total depth of the well to allow sufficient room for drawdown during pumping. The pumps are attached to approximately 500 feet of 1.5-inch threaded steel pipe, which is attached to a 6-inch sanitary well seal at the top of each well casing. Corrosion of the pumps and pipe materials was minimized through use of corrosion resistant materials and the installation of sacrificial zinc anodes on the drop pipes.

A 6-inch sanitary well seal and a 1.5-inch-diameter threaded steel pipe were installed in the injection well casing to convey water from the piping exiting the system Conex box to the screened interval of the injection well. The injection pipe extended down into the water column and was fitted with a 4-inch diameter, custom designed and fabricated down-hole flow control valve (FCV, manufactured by Baski, Inc.) to limit risks of cavitation within the pipe, and to minimize volatilization and aeration of the anaerobic recirculation water. A check valve was installed at the base of the FCV, with an electric submersible pump (Grundfos 5SQE-10-410, 2.3 horsepower) with variable speed frequency drive installed underneath to sample groundwater in the vicinity of the injection well (when the recirculation system is off, and water is not being injected). The injection well sampling pump intake was set at 492 feet bgs, approximately 10 feet above the total depth of the well. Corrosion of the FCV was also minimized through use of corrosion resistant materials and the installation of sacrificial zinc anodes on the drop pipe.

The extraction and injection well pumps were connected to the control room via power supply lines that were run up along-side the drop pipe within the well casing, through the well vault and underground to a conduit stuck-up adjacent to the Conex box. These power supply cables then entered the Conex box and landed on the terminals of the appropriate variable frequency drives.

2.5 Well Survey

The location and elevation of each well casing was surveyed by a New Mexico-licensed professional land surveyor from High Mesa Consulting Group in accordance with the United States Geological Survey Standard Operating Procedure developed for all monitoring wells on Kirtland AFB (U.S. Geological Survey [USGS], 2016).

Coordinates are based on the North American Datum of 1983 New Mexico State Plane Coordinate System. Elevations are based on the North American Vertical Datum of 1988. The elevation and horizontal location measurements were made to an accuracy of 0.01 and 0.1 foot, respectively. Results of the survey are summarized in Table 1.

2.6 Recirculation Pilot System Equipment and Materials

The pilot test involved multiple test phases requiring recirculation of anaerobic groundwater and addition of tracers and amendments to this water. The equipment necessary to perform the pilot test was installed in the appropriate wells (as detailed above) and a portable shipping (Conex-type) container, and included the necessary pumps, filters, mixers, meters, electrical, and piping to add tracers/amendments and distribute them in the subsurface (as detailed in this section). The container was also used for security and environmental control and was located adjacent to the well field test area, see Figure 2.

The system for amending and recirculating water was designed by APTIM, together with subcontractors, and was fabricated by Calcon Systems Inc. (Calcon). As discussed in Section 3.1, APTIM and the Calcon

performed all necessary system installation, shakedown verification testing (including, but not limited to, pressure testing and alarm functionality testing), and start-up tasks. The system as-built drawings and component specification sheets are presented in Appendix E.

A 20-ft long Conex box was used to house the recirculation and tracer/ amendment delivery system components. Figure 5 presents a schematic of the Conex box treatment system. The box has a partition wall, separating the enclosure into two spaces. The smaller of the two spaces is the system control room, which is rated as a non-hazardous atmosphere, and houses the supervisory control and data acquisition (SCADA) system with integrated computer, electrical control panel, Baski FCV controls and associated nitrogen cylinder, and a combination air conditioner/heater. The larger space, which includes the recirculation water piping/fittings, flowmeters, pressure transmitters, tracer/amendment tanks, chemical feed pump, and other system process components, is rated as a Class 1, Division 2 atmosphere, due to the possible presence of fuel hydrocarbons in the recirculation water flowing through the piping in this portion of the enclosure. All electrical components and connections in this portion of the enclosure are intrinsically safe to meet the hazardous atmosphere classification. This space also contains a floor leak sensor, which continuously monitors for water on the floor of the enclosure (in the case of a pipe failure or other leak), having the ability to shut down the system and notify appropriate personnel in the case of an alarm condition.

The main components of the recirculation system are identified on a process flow diagram (see Figure 6), while a more detailed design is presented on the piping and instrumentation diagram (P&ID), which is shown on Figure 5. To maintain the anaerobic conditions of the groundwater and aquifer and to prevent the loss of volatile components within the groundwater, the system was designed to minimize gas exchange between the recirculated groundwater and the atmosphere. The system was designed to extract groundwater from the two extraction well locations and reinject that groundwater in the injection well after tracer or amendment addition, at a design flow rate of up to 24 gpm. This design flow rate was

achieved by the system, but operational flowrates changed during the pilot test based on tracer results and other site conditions, as discussed further in Section 3.

Electrical power for system operation is supplied by on-base grid power through an electrical line that runs from the power source on the east side of the site to the recirculation system (see Figure 2). A 480-volt, 3-phase electrical service is required to operate the 60-horsepower extraction well pump motors. APTIM worked with base civil engineering personnel and a licensed electrical subcontractor to procure and install the necessary transformer and underground service line to the main disconnect switch on the system enclosure (Conex box). Trenching of the main power supply cable to the Conex box was required. Appropriate dig and base civil engineer permits were acquired prior to starting. Trenching and installation of the electrical power line was completed from April 17 to April 21, 2017. The electrical line was installed in a 3-foot deep trench. The route of the electrical power line is presented on Figure 2.

The treatment system includes a SCADA system for remote monitoring of flow rates and other parameters, to compliment on-site adjustments and regular operation and maintenance. Process instrumentation, including pressure, level, and flow gauges/switches, were installed at critical locations in the system, as shown on the P&ID (Figure 5), to ensure safe and controlled operation. The programmable SCADA and logic controllers contain the process control logic to monitor and regulate the operation of the various system components, both locally and remotely. The SCADA enables the application of power to the pumps, regulates flowrates, pressures and operation of the FCV, while continuously monitoring the system safety interlocks and making emergency call outs when the system is offline or in alarm mode.

Water conveyance pipelines connecting the Conex box to the extraction and injection wells were installed in trenches approximately 4 feet deep (below the frost line). The underground conveyance piping consists of double containment system that houses the 2-inch piping. The conveyance piping, injection valve pneumatic tubing, pump electrical leads, well vault leak detection wire, Baski nitrogen line, and water

level transducer wire leading from the Conex box to the wells are all located within the trenches. Where extraction and injection well piping breaches the ground surface and enters the container (above grade), the piping transitions to 1.5-inch single-walled Schedule 80 PVC, and is insulated to prevent freezing. Trenching began in April 2017 and well pipelines were connected to the system container and pressure tested on April 20, 2017.

Groundwater extraction occurred through the use of electric submersible well pumps (Grundfos 25S50-26) with variable speed frequency drives. Each of the two 4-inch-diameter pumps are fully submersible and capable of maintaining design flows. The variable speed frequency drives were controlled by input values from the SCADA system to fine tune motor operation to adjust flow rates, as needed. Once groundwater was extracted from each of the two extraction wells, it was directed through a pair of particle filters prior to combining flows. These filters were used to prevent undesired particulates from entering the amendment and reinjection portions of the system. Generally, 100-micron (µm) polyethylene woven (poly-woven) filters were used in the lead canisters, while 50-µm poly-woven filters were used in the lag canisters. During system operation, it was determined that the 100- and 50-µm filters had a longer operation lifetime. Earlier use of 50- and 20-µm pleated cellulose filters at the onset of the demonstration resulted in frequent filter changes and quick pressure build-up. The change to poly-woven filters with larger nominal pore sizes significantly improved filter runtimes.

Bourdon tube pressure gauges and switches are installed on the upstream side of the particle filters (as shown on the P&ID, Figure 5), between filters, and on the downstream side of the filters to sense back pressure on the filters. The SCADA system had two alarm set points associated with these pressure switches. The first (high pressure alarm) is an indicator to the system operator that the filters are in need of cleaning/changing, while the second (high-high pressure alarm) shuts-down the system until the filters are cleaned/ changed and the system is manually restarted. The poly-woven filters are housed within 20-inch polypropylene Pentek canisters that are pressure rated to 100 pounds per square inch. ProSense®

pressure transmitters are installed along the aboveground extraction well piping, upstream of the filters. Additionally, a pressure transmitter is connected to the injection well manifold within the well vault. These monitor the pressures of the system and are connected to the SCADA. Once the groundwater exits the filters from each pipeline, the flows from each extraction well are combined into one 2-inch Schedule 80 PVC pipeline that discharges to the injection well.

Signet 2551 Magmeter flow meters were installed along each extraction and injection well pipeline, just downstream of the filters (three flow meters, one on each pipeline). Totalizing meter installation reports, calibration documentation, and specification sheets were submitted to the OSE, as required by the Change of Water Rights Conditions of Approval for permitted wells RG-1579 POD316 through POD318. This documentation is contained in Appendix B.

Prior to reaching the injection well, extracted groundwater was mixed with either tracers or other amendments (depending on the phase of operation, as discussed in Section 3) using an amendment delivery system consisting of a 550-gallon amendment tank, control valves, pressure gauges, positive displacement variable speed metering pumps (LMI E711-368SI), and a pressure regulating tank.

The amendment tank is fitted with an EchoSonic® ultrasonic level sensor that is programmed with the SCADA. The level sensor is a non-contact sensor that is installed on the top of the amendment tank. The tank has an 8-inch opening with vented lid. Mixtures of water and fluorescein/deuterated water tracer or water and sodium lactate, diammonium phosphate (DAP), and potassium iodide (KI) were batched/mixed within the amendment tank prior to distribution, via the chemical feed pump, into the injection well piping. Tracer/amendment storage and mixing is further discussed in Section 3. The amendment tank is fitted with an outlet port and tubing that connects to the chemical feed pump and calibration column (4,000 milliliter graduated cylinder). The calibration column is connected to the chemical feed pump via a

gate valve and tubing connections. Pump tests were performed using the calibration cylinder and deionized (DI) water to determine and dial-in the appropriate flowrate of the chemical feed pump.

After the amendment solution enters the injection well piping, it flows through a 19-inch PVC static mixer to help blend the amendments with the groundwater (Figure 6). A 31.8-gallon HydroPro pressure tank is connected to the recirculation piping within the system container, to regulate the pressure spikes within the recirculation system. A wall-mounted Rosemount™ pressure transmitter is connected to the pressure tank piping.

A down-hole FCV and submersible pump, both installed in the injection well (as discussed in Section 2.4.4), is controlled by input values from the SCADA system, as needed. The system was designed to shut down automatically if the water level transducer in the injection well indicated that the water level in the well casing has risen to a predetermined level, or if the water level transducer in one or both of the extraction wells indicated that the water level has dropped to within approximately 2 feet of the top of the extraction well screen.

The Conex box was pre-fabricated by Calcon at their facility in San Ramon, California and delivered on April 13, 2017 to the pilot test site. Final design as-builts and specification sheets for system components are included in Appendix E.

3. PILOT SYSTEM OPERATION AND MONITORING

The pilot testing was performed in four phases. The duration and a timeline of each of these phases are summarized in Table 2. Data were collected and evaluated during each phase of the pilot test and the results were used to adjust each phase duration, as needed. The first phase (Phase 1) started after installation, development, and testing of the wells and equipment associated with the Pilot Test System. Phase 1 included an evaluation of baseline conditions, and operation of the recirculation system while performing a tracer test to evaluate distribution of injected water in the subsurface. The second phase (Phase 2) included an evaluation of biostimulation on EDB degradation through operation of the recirculation system and the addition of nutrients and a fermentable substrate to the subsurface. The third phase (Phase 3) of the pilot testing was originally proposed to include bioaugmentation with an exogenous debrominating culture (SDC-9), and an evaluation of enhanced EDB degradation. However, as discussed in Section 3.5, bioaugmentation was deemed not necessary based on results during Phase 2, and a further evaluation of biostimulation was performed as Phase 3. The modified Phase 3 was approved by the NMED in a letter dated August 7, 2018 (NMED, 2018). The fourth and final phase (Phase 4) of the pilot test consists of post-treatment monitoring and assessment and is ongoing. Activities during this final phase focus on longer-term performance of ISB.

3.1 Pilot System Start-up Testing

Final electrical and piping connections, including power and control wiring between the Conex box control panel and the extraction/injection well pumps and vault control components/sensors, and final pipe connections between the stubbed-up extraction/injection well piping and the Conex box were made by Calcon and APTIM from May 11 through 16, 2017. Shakedown testing of the Pilot Test System, which included testing the extraction well pumps; pressure and flow transmitters; leak detection and level sensors; chemical feed pump; Baski FCV and control system; injection well sample pump; remote telemetry; and alarm interlocks was performed on May 16 and 17, 2017 prior to full system start-up.

There were no notable operational issues with the system during shakedown testing, with all interlocks and associated alarms working properly. The Pilot Test System was started on June 29, 2017 during the first baseline sampling event at the extraction and injection wells. The Pilot Test System was restarted and retested on September 26, 2017, after a three-month project delay caused by faulty monitoring well sampling pumps (discussed in Section 2.4.4) and just prior to initiation of tracer testing (Phase 1).

3.2 Baseline Sampling

Initial baseline sampling occurred from June 29 through August 16, 2017 using Geotech dedicated bladder pumps at the monitoring wells and submersible Grundfos pumps at the extraction and injection wells. During this time, KAFB-106MW1-S was not sampled due to numerous pump failures (Section 2.4.4). Baseline samples were recollected for all analyses except for Microbial Insights QuantArray-Chlor from September 18 through September 26, 2017. All pilot test wells were sampled prior to Phase 1 recirculation activities to establish pre-test baseline conditions. Purged groundwater was passed through a flow-through cell equipped with a YSI™ ProDSS multi-parameter water quality meter for evaluation of geochemical stabilization parameters (pH, dissolved oxygen [DO], oxidation-reduction potential [ORP], temperature, and specific conductivity). Turbidity was measured with a Hach™ Model 2100Q turbidity meter. Water quality meters were calibrated prior to each sampling event, in accordance with manufacture's recommendations. Table 3 summarizes the field water quality measurements collected prior to sampling. Table 4 presents the suite of analytes that were measured by the certified analytical laboratories and the sampling frequency. An evaluation of baseline and other analytical testing results are presented in Section 4.

3.3 Phase 1 – Tracer Testing

The purpose of Phase 1 was to evaluate baseline conditions and the distribution of recirculated water using tracer amendments. Groundwater (without biostimulation or bioaugmentation amendments) was extracted from the two extraction wells at flow rates of 10 gpm from each well, combined, and after

tracers were added (during a 24-hour period), the water was reinjected back into the subsurface at the injection well. The recirculation portion of Phase 1, which was conducted for four weeks from October 2 to November 3, 2017, distributed injected water throughout the pilot testing zone and established new experimental baseline measurements for comparison to later biostimulation phases. The passive portion of Phase 1 began on November 3, 2017, upon shutdown of the recirculation system, and concluded on December 21, 2017.

During Phase 1, two conservative (i.e., non-reactive) tracers of water flow were used to evaluate subsurface transport characteristics. The two tracers used were fluorescein and water labeled with additional deuterium, a stable isotope (i.e., non-radioactive) of hydrogen. Prior to injection, the fluorescein and deuterated water were homogenized with 22 gallons of deionized water in a 55-gallon drum. The drum was plumbed to the inlet of the chemical feed pump via 3/8-inch diameter polyethylene tubing. Over a period of approximately 24 hours, from October 2 through 3, 2017, approximately 54 grams of fluorescein and 15 kilograms of deuterium oxide (^2H_2O) were injected into the treatment zone through the recirculated groundwater. During the entire Phase 1 recirculation period, approximately 1,024,000 gallons of water were extracted and reinjected.

During Phase 1 recirculation system operation, increased back pressure upstream of the sediment filters at pressure transmitters PIT-103 and PIT-109 (Figure 5) was observed, caused by an increased loading on the filters, resulting in more frequent filter changes than was originally anticipated, with KAFB-106EX1 experiencing a faster sediment loading rate. Initially, sediment was observed on the 10-inch long pleated cellulose filters CF-1-1 and CF-1-3; though this diminished in the short-term. A number of what appeared to be biological masses were also observed on filters during this time. Several approaches were used to mitigate the heavy filter loading and frequent filter change-out rate by increasing the effective filter surface area. The 10-inch long canister housings at CF-1-1 through CF-1-4 were replaced with 20-inch long canister housings, and woven polyethylene filter cartridges replaced the existing pleated cellulose.

During the majority of Phase 1, 100- and 50-µm woven polyethylene filters were ultimately used on both extraction well lines in the lead and lag positions, respectively, with much improved runtimes.

Water level readings in the extraction and injection wells were continuously monitored by the SCADA system and monitored manually periodically. During recirculation system operation, it became apparent that the water level readings from pressure transducers located in the extraction well drop pipes were not accurate. While the readings returned to the SCADA were erratic, the overall trends in the data were decipherable. The likely cause of the inaccurate readings was electrical interference from the extraction well pumps' power leads running down the well to the pump near the drop tubes where the transducers and their control wires were housed. As a result, manual water level readings were periodically measured using the Solinst water level meter. Manual water level readings are summarized in Table 5.

Eight groundwater sampling events designed to quantify transport properties during active recirculation were conducted during Phase 1, with two additional sampling events conducted approximately 2 and 4 weeks after recirculation activities ceased. Groundwater fluorescein concentrations and delta deuterium (measure of hydrogen isotope composition) (δ^2H) values were determined for these samples. In addition, groundwater measurements were collected during one subset of the recirculation sampling events (Day 23, collected on October 24 and 25, 2017) to determine baseline conditions for the other analytes presented in Table 4.

Groundwater samples were collected intermittently at extraction, injection, and the six groundwater monitoring wells during the active portion of Phase 1, and biweekly during the passive portion. KAFB-106MW1-S/I, KAFB-106MW2-S/I, KAFB-106064, KAFB-106063, KAFB-106EX1, KAFB 106EX2, and KAFB-106IN1 were sampled using either dedicated QED MicroPurge® Model P1101HM bladder pumps (monitoring wells) or the down-hole extraction pumps or injection well sampling pump (the injection well was not sampled during active recirculation). Prior to purging, depth to

water measurements and depth to NAPL (if present) were collected at groundwater monitoring wells KAFB-106MW1-S, KAFB-106064, and KAFB-106063; extraction wells, and the injection well. Water level measurements were also collected during purging to monitor for drawdown. Water levels were measured using a portable water level indicator and interface probe (Solinst). Both manual water level measurements (Solinst probe) and transducer measurements were collected from extraction and injection wells. Due to the size of the well casing and placement of the dedicated tubing bundle, water level measurements could not be obtained from KAFB-106MW1-I, KAFB-106MW2-I, and KAFB-106MW2-S. The field water quality parameters, NAPL, and water level measurements were recorded on the purge logs for each well. Purge logs and sample collection logs are included as Appendix F.

Each well was purged to remove stagnant water from the well in order to collect a representative groundwater sample. Purged groundwater passed through a flow-through cell equipped with a YSI™ ProDSS multi-parameter water quality meter for evaluation of geochemical stabilization parameters (pH, DO, ORP, temperature, and specific conductivity). Turbidity was measured with a Hach™ Model 2100Q turbidity meter. Purging continued until three stable field measurements for DO, pH, ORP, specific conductivity, temperature, and turbidity were obtained. Stabilization criteria for field measurements were three consecutive readings within 10% of each other. Water quality meters were calibrated prior to each sampling event, or after anomalous readings were observed. Samples from the extraction and injection wells were collected from sample ports located along the system piping, upstream of the sediment filters. Table 3 summarizes the field water quality measurements collected prior to sampling. Table 4 presents the suite of analytes that were measured by the certified analytical laboratories. Both hydrogen and carbon isotopes were reported using (δ) notation, where δ^2H or $\delta^{13}C = R_{sample}/R_{standard}-1$ and R is the $^2H/^1H$ or $^{13}C/^{12}C$ ratio of the sample and the standard (Vienna Standard Mean Ocean Water for δ^2H, and Vienna Pee Dee Belemnite for $\delta^{13}C$), respectively. Note that the commonly included multiplier of 10^3 has been omitted from the equation but should be incorporated to report δ values as per mille (‰). EDB CSIA)

samples were analyzed by Dr. Tomasz Kuder at the University of Oklahoma, through funding provided by Environmental Security Technology Certification Program Project ER-201331.

Ten sampling events were conducted during Phase 1. Additionally, three samples were collected from the injection well sampling port, which was representative of the groundwater being injected on October 2 and 3, 2017. Fluorescein and δ^2H data suggested good hydrologic control and connectivity at the test site. Tracer testing results are further discussed in Section 4.

3.4 Phase 2 – Biostimulation

The purpose of Phase 2 was to evaluate biostimulation in the subsurface after distribution of treatment amendments in recirculated groundwater. Phase 2 consisted of two operational periods, a recirculation/mixing (active) period, and a subsequent passive monitoring period (no recirculation). During the recirculation period, groundwater was extracted and an easily fermentable sodium lactate-based substrate (WilClear Plus®, manufactured by JRW Bioremediation), nutrient (DAP), and conservative tracer (KI) were added to the recirculated process water stream. The amended water was reinjected to distribute the amendments throughout the pilot testing zone. The goal of these amendments was to stimulate activity of native microbial populations capable of debrominating EDB.

Upon completion of the passive Phase 1 monitoring period, the recirculation system was restarted on December 11, 2017 and allowed to run at extraction rates of 10 gpm (each well) prior to introducing amendments. The active portion of Phase 2 began on December 21, 2017 with the injection of treatment amendments for biostimulation and continued until February 7, 2018. A concentrated solution of the amendments was prepared in the amendment mixing tank (AT-1, see Figure 5) and added to the process stream by the chemical feed pump manufactured by LMI (P-2-1).

The amendment solution was prepared using water obtained from the Kirtland AFB potable water plant located on Texas Drive and transferred to the project site in 275-gallon totes. The water was transferred from the totes into the amendment tank via a sump pump and garden hose. Volume marks on the tank were used to bring the water up to the desired level. DAP and KI were weighed using a kitchen scale and poured into the tank. The sodium lactate was pumped from 55-gallon drums into the tank using a drum pump and tubing. A Goulds submersible mixing pump was deployed within the amendment tank to mix the amendments and keep the constituents in solution. During this homogenization, specific conductivity in the tank was measured at regular intervals until it was determined that the readings had stabilized. After reaching stabilization, the chemical feed pump was turned on to start amendment injection. A pulsed amendment injection scenario was implemented in an attempt to minimize biofouling in the injection well. Additional batches of amendments were mixed once the level within the amendment tank reached a predetermined low level. A new batch was typically mixed every 4 to 7 days during recirculation. Over the approximately 7-week active injection period in Phase 2, approximately 290 gallons of WilClear Plus®, 150 kilograms of DAP, and 71 kilograms of KI were injected into the treatment zone. Table 6 summarizes the injected quantities for each Phase of the pilot test. During the entire Phase 2 recirculation period, approximately 1,468,000 gallons of water were extracted, amended, and then reinjected.

Approximately two hours after amendment injection began on December 21, 2017, a leak was observed originating from the chemical feed pump. The system was shut down and the chemical feed pump head and four-way valve were dismantled to determine the cause of the leak. Small crystals were observed within the check ball housings and on the check balls within the four-way valve. The affected areas were cleaned with cotton swabs and deionized water, reassembled, and the system was restarted. During a system check on December 23, 2017, it was observed that while the chemical feed pump was running, no amendment fluid was being conveyed through the tubing to the injection point on the recirculation process piping. Coincident to this, an increase in mounding (up to 9 feet above static [476 feet bgs]) at the injection well was observed. The system was shut down to diagnose and rectify the crystallization issue. It

was determined that amendment concentrations needed to be decreased in the amendment tank. Lower amendment concentrations and running the AT-1 submersible mix pump more frequently rectified the crystallization issue, allowing the chemical feed up to operate properly. Introduction of amendments using the new concentrations began on December 29, 2017. The active portion of Phase 2 was extended until February 7, 2018 to deliver the planned mass of amendments.

During Phase 2, approximately 11 feet of water level drawdown was observed at KAFB-106EX2 during active Phase 2 system operations. The flowrate at KAFB-106EX2 was incrementally reduced to 7 gpm beginning on January 8 through January 22, 2018 to prevent drawdown of water below the top of the screened interval. Extraction well KAFB-106EX1 did not display a similar drawdown trend, and thus, remained at 10 gpm throughout Phase 2. Table 5 presents the measured water levels and flowrates for the two extraction wells during Phase 2.

The passive portion of Phase 2 began on February 7, 2018, when the recirculation system was shut down, and concluded in July 2018. After the chemical feed pump was turned off and injection of the amendments ceased, the extraction wells were allowed to run for several hours to flush the injection well screen and filter pack. During the passive period of Phase 2, groundwater in the treatment zone was monitored for approximately 3 months to evaluate whether EDB degradation was enhanced (as further described in Section 4).

Groundwater samples were collected on a weekly basis during active recirculation and on a monthly basis during the passive portion of Phase 2 at extraction, injection, and monitoring wells, to evaluate the effectiveness of biostimulation. An additional passive sampling event was conducted, resulting in seven total sampling events for Phase 2. Groundwater sampling was performed as described in Section 3.3. Table 3 summarizes the field water quality measurements collected prior to sampling. Table 4 presents

the suite of analytes measured by the certified analytical laboratories. An evaluation of the Phase 2 sampling results is presented in Section 4.

3.5 Phase 3 – Biostimulation

As described in the Work Plan (USACE, 2016a), Phase 3 originally included a recirculation period that included both biostimulation and bioaugmentation. The Work Plan proposed that the biostimulation-portion of Phase 3 be similar to Phase 2 and that a debrominating bioaugmentation culture (SDC-9) would be injected into KAFB-106IN1 and distributed with the recirculation system. As presented in the *Phase 3 Ethylene Dibromide In Situ Biodegradation Pilot Test Notification Letter, Bulk Fuels Facility, Kirtland AFB, New Mexico* (USACE, 2018a), after evaluating analytical data from the passive period for Phase 2, it became evident that the rate of anaerobic EDB biodegradation was significantly enhanced as a result of biostimulation, and that bioaugmentation was not warranted as a part of Phase 3. Analytical results from the passive period of Phase 2 were discussed in the letter. NMED approved removal of bioaugmentation from Phase 3 in their letter dated August 7, 2018 (NMED, 2018), concluding that bioaugmentation remain an approved, but deferred, component of the pilot test.

Therefore, similar to Phase 2, the purpose of Phase 3 was to continue to evaluate biostimulation in the subsurface after distribution of treatment amendments in recirculated groundwater. Phase 3 also consisted of two operational periods, a recirculation/mixing (active) period, and a subsequent passive monitoring period (no recirculation). During the recirculation period, groundwater was extracted and WilClear Plus® and DAP were added to the process water stream before reinjecting it to distribute the amendments throughout the pilot testing zone.

Upon completion of the passive Phase 2 monitoring period, the active portion of Phase 3 began on July 30, 2018, with the groundwater extraction rates of 10 gpm at KAFB-106EX1 and 7 gpm at KAFB-106EX2. The injection of treatment amendments for biostimulation continued until September 9, 2018. A

concentrated solution of the amendments was prepared in a similar fashion to that in Phase 2 (discussed in Section 3.3.1). A pulsed amendment injection scenario was again implemented in an attempt to minimize biofouling in the injection well. Over the approximately 5-week active injection period in Phase 3, approximately 340 gallons of WilClear Plus® and 143 kilograms of DAP were injected into the treatment zone. Table 6 summarizes the actual injected quantities for each Phase of the pilot test. During the entire Phase 3 recirculation period, approximately 924,000 gallons of water were extracted, amended, and then reinjected.

The water table drawdown measured at KAFB-106EX2 during the active portion of Phase 2 became apparent again during Phase 3 system operations (as shown on Figure 7). The extraction flow rate at KAFB-106EX2 was incrementally reduced from 7 to 4 gpm during Phase 3 (beginning on August 6 through August 30, 2018) to prevent drawdown of water below the top of the screened interval. Extraction well KAFB-106EX1 remained at 10 gpm during Phase 3. Increased mounding was also observed throughout the active portion of Phase 3 at the injection well (see Figure 7), increasing to approximately 35 feet above the static level by the end of Phase 3 active recirculation.

The recirculation system was shut down on September 9, 2018, initiating the passive portion of Phase 3 that concluded on November 19, 2018. After the chemical feed pump was turned off and injection of the amendments ceased, the extraction wells were allowed to run for several hours to flush the injection well screen and filter pack. During the passive period of Phase 3, groundwater in the treatment zone was monitored for approximately 3 months to evaluate whether EDB degradation was enhanced (as further described in Section 4).

Groundwater samples were collected weekly during active recirculation and monthly during the passive portion of Phase 3 at extraction, injection, and monitoring wells to evaluate the effectiveness of

biostimulation. An additional recirculation sampling event was conducted, resulting in seven sampling events for Phase 3 (Table 4).

During the first Phase 3 passive sampling event (September 2018), the injection well sampling pump mounted below the FCV failed to pump water to the surface. After approximately 40 minutes of pumping, the water level in the well was manually checked and found to have drawn down below the transducer to the level of the pump intake (492 feet bgs). Thus, it seemed the loss of well capacity suggested by the increased mounding at the injection well (shown on Figure 7) was preventing groundwater from flowing into the well to sustain pumped flow to the surface; likely due to fouling of the well screen. Fine sand, silt, and grey biological-like growth were observed on the transducer cable and probe when it was pulled to collect manual water level measurement. As a result, of the decreased well capacity, sample collection using the injection well pump was no longer possible, and samples from KAFB-106IN1 were collected using a 0.85-inch by 36-inch stainless steel bailer lowered to the groundwater through the transducer drop tube. Samples were collected with the bailer during the Phase 3 passive sampling events conducted on October 4 and November 19, 2018.

Groundwater sampling methods were performed as described in Section 3.3. Table 3 summarizes the field water quality measurements collected prior to sampling. Table 4 presents the suite of analytes measured by the certified analytical laboratories. An evaluation of Phase 3 sampling results is presented in Section 4.

3.6 Phase 4 – Long-Term Monitoring

Phase 4 consists of continued groundwater monitoring with no active recirculation and began upon completion of the final Phase 3 sampling event on November 19, 2018. The recirculation system was not operated during Phase 4, except briefly during extraction well sampling. During this Phase and in accordance with the Work Plan (USACE, 2016a), groundwater samples are to be collected on a bi-

monthly basis at extraction, injection, and monitoring wells to evaluate the performance of the technology and quantify any rebound of EDB. Only one sampling event has been conducted as a part of Phase 4 under the current contract, on January 16 through January 21, 2019. This sampling event occurred approximately 2 months after the Phase 3 passive period was concluded, in accordance with the Work Plan (USACE, 2016a). Continued sampling of the groundwater monitoring, extraction, and injection wells is planned under a separate contract. Groundwater sampling methods were performed as described in Section 3.3. Table 3 summarizes the field water quality measurements collected prior to sampling. Table 4 presents the suite of analytes measured by the certified analytical laboratories. An evaluation of Phase 4 sampling results to date is presented in Section 4.

3.7 NAPL Sampling

Measurable NAPL was detected in the shallow nested well KAFB-106MW1-S during QED pump installation on September 5, 2017. Three separate measurements were collected using a Solinst interface probe and confirmed a thickness of approximately 0.27 to 0.31 feet. NAPL was not detected at any other shallow monitoring wells within or around the treatment zone, or in the injection well. The extraction wells were not gauged for NAPL, as the top of the well screens were designed to be installed below the static water level. Well KAFB-106MW1-S was bailed on September 8, 2017 and approximately 60 milliliters of product were recovered. The product was containerized and submitted to Pace Analytical® (Pace) for the following analysis:

- C3-C12 PIANO Quantitative Molecular Characterization by gas chromatography-mass spectrometry (VOC Fingerprinting)
- C8-C40 Full Scan Qualitative Molecular Characterization by gas chromatography-mass spectrometry (semivolatile organic compound Fingerprinting)
- Density and Viscosity

Density and viscosity analyses were subcontracted to Clark Testing. Additional product recovery was attempted on September 13 and 14, 2017, and approximately 60 milliliters were recovered and sent to the APTIM Lawrenceville laboratory. NAPL has not been detected in KAFB-106MW1-S since that time, but has been continually monitored on a weekly basis.

The NAPL analysis by Pace indicated a great variety of hydrocarbons, but notably benzene (31.8 milligrams per kilogram [mg/kg]) and EDB (20.5 mg/kg) concentrations were low compared to toluene (7,396 mg/kg) and ethylbenzene (6,098 mg/kg). This laboratory report is included in Appendix G. The NAPL received by APTIM was noted to contain similar quantities of toluene (7,190 milligrams per liter [mg/L]) and ethylbenzene (5,340 mg/L) and was presumed to have similar composition to that evaluated by Pace. The NAPL sample received by APTIM was also equilibrated with water at 1:1 and 1:10 ratios, and equilibrated aqueous concentrations for EDB, benzene, and toluene were approximately 150 micrograms per liter (µg/L), 160 µg/L, and 8,200 µg/L, respectively. The EDB and toluene concentrations are similar to that observed during baseline testing as described in Section 4.1, but the equilibrated benzene concentrations were smaller. The $\delta^{13}C$ value of the EDB in the NAPL, as determined by the University of Oklahoma, was approximately -21±2‰.

The fall and rise of the water table during well installation and development may have impacted the vertical transport and subsequent distribution of NAPL in the lower vadose zone, capillary fringe, and top of the unconfined aquifer; causing the measureable NAPL at KAFB-106MW1-S.

3.8 Sample Analysis

All sampling activities were conducted in accordance with Sections 5.2.4 and 5.2.5 of the Groundwater Investigation Work Plan (USACE, 2011b), and the site-specific Quality Assurance Project Plan, which is an appendix to the Groundwater Investigation Work Plan. Evaluation of EDB carbon isotopes was performed by CSIA as part of a U.S. Department of Defense Environmental Security Technology

Certification Program Project ER-201331 entitled, "Natural Attenuation and Biostimulation for In Situ Treatment of 1,2-Dibromoethane (EDB)." The monitoring, extraction, and injection wells were sampled for baseline conditions in June 2017. Samples were submitted for the following analyses:

- VOCs (United States Environmental Protection Agency [EPA] Method 8260B)
- EDB (EPA Method 8011)
- Dissolved iron and manganese (EPA Method 6010C)
- Anions – bromide, nitrate, nitrite, chloride, and sulfate (EPA Method 9056A)
- Nitrate and nitrite as nitrogen (EPA Method 353.2)
- Iodide (EPA Method 300.0)
- Reduced Gases (RSK SOP-175; EPA 3810)
- Volatile Fatty Acids (EPA Method 300 Modified)
- Alkalinity (Standard Method 2320B)
- Microbial Community (QuantArray-Chlor)
- Dissolved ortho-phosphate (Standard Method 4500 PE and EPA Method 9056A)
- EDB CSIA (Kuder et al, 2012)
- δ^2H (Hydrogen/H_2O Equilibration Isotope Ratio Mass Spectrometry)
- Fluorescein Dye Tracer (Spectrofluorophotometry)

Due to ultimate replacement of the Geotech bladder pumps with the QED MicroPurge® Model P1101HM bladder pumps in September 2017, baseline samples were recollected from September 18 through 26, 2017. Baseline samples were not originally collected at KAFB-106MW1-S in June 2017 due to repeated pump failures. Analytical results from baseline samples are discussed in Section 4.0.

3.9 Sample Documentation

Sample collection logs, purge logs, and chain-of-custody form were completed by field personnel during monitoring and sampling activities. Sample collection logs and purge logs are included in Appendix F. Chain-of-custody forms are included with the laboratory reports (Appendix G).

3.10 Quality Control

Field quality control samples were collected as part of each sampling event and included field duplicate and trip blank samples. Duplicate samples were analyzed to estimate the overall reproducibility of the sampling and analysis process and were collected immediately after the original/parent sample to reduce variability. Trip blank samples were used to evaluate potential contamination by VOCs during sampling, shipment, and laboratory processing. Additionally, internal laboratory quality control samples, including laboratory control samples, replicates, matrix spikes, matrix spike duplicates, and surrogate spike samples were analyzed concurrently with the groundwater samples.

The groundwater analytical data were validated for precision, bias, accuracy, representativeness, comparability, and completeness, and appropriate data qualifiers were appended to the analytical data in the project database. The data validation results are presented in the Data Quality Evaluation Report, which is included as Appendix G-1. Laboratory data packages are also provided in Appendix G-2.

3.11 Waste Management

IDW generated during the pilot test included soil generated from drilling activities and liquid IDW generated during drilling operations, well development, equipment decontamination, and groundwater sampling. All soil and liquid IDW generated during implementation of the pilot test was handled and disposed of in accordance with the Waste Management Plan of the Groundwater Investigation Work Plan (USACE, 2011b) and the Work Plan (USACE, 2016a). Kirtland AFB Landfill disposal letters and approvals; waste profiles; and hazardous and non-hazardous waste manifests for liquid IDW are provided in Appendix H.

3.11.1 Soil IDW

Soil IDW was generated during drilling and well installation activities at two nested monitoring wells, two extraction wells, and one injection well. All drill cuttings were containerized in plastic-lined, steel roll-off containers pending laboratory analysis for waste characterization and disposal. Each roll-off was sampled for waste characterization. Once the analytical results were received, reviewed, and determined to meet landfill requirements, a "Request for Disposal" letter was provided to Kirtland AFB for approval to dispose of the contents of each container. Analytical results for all roll-off containers confirmed that the drill cuttings were not a hazardous waste, and they met the requirement for disposal at the Kirtland AFB Construction and Demolition Landfill. Soil IDW disposal letters generated for the roll-off containers and associated approval letters are provided in Appendix H-1.

On January 25, 2017 at 12:30 p.m. approximately ¼ to ½ cubic yards of semi-saturated soil was released to the ground surface within the pilot test construction area while attempting to move a roll-off bin. The spill was reported by Kirtland AFB both verbally and in written format to the NMED Hazardous Waste Bureau within twenty-four hours. A Corrective Action Report was submitted to both the NMED Hazardous Waste Bureau and Ground Water Quality Bureau on February 9, 2017 (USACE, 2017b) and is included in Appendix H-2.

3.11.2 Liquid IDW – Development and Decontamination

Liquid IDW was generated during decontamination resulting from drilling activities, and during development. The following steps were followed during IDW liquid handling, storage, and characterization for liquid IDW generated during drilling and well development activities:

1. Development and decontamination water were transferred into appropriately sized storage tanks located at the drill site for temporary accumulation, pending laboratory analysis.

    a. For monitoring wells, liquid IDW generated from development activities was typically accumulated in 275 gallons totes. During development of the pilot test monitoring wells, an average of two totes were filled per well. Water from different wells was not combined.

    b. For extraction and injection wells, liquid IDW was accumulated in 19,000-gallon Baker tanks, since the development procedures for these tanks are more intensive and produced a greater amount of water. During development of the extraction and injection wells, one Baker tank was filled for each extraction well, and two Baker tanks were filled for the injection well. Jetting was performed at the injection well as part of the development process and the procedure created a greater volume of liquid IDW.

2. Storage tank and totes were labeled with pending analysis stickers containing the dates of accumulation, well identification, and generator point of contact information.

3. Once development of a specific well was complete, a composite water sample was collected from the storage container(s) using a disposable bailer and analyzed for the following: anions (EPA Method 300), nitrate (EPA Method 353.2), dissolved metals (EPA Method 6010), total lead (EPA Method 6010), semivolatile organic compounds (EPA Method 8270), VOCs (EPA Method 8260), and EDB (EPA Method 8011).

4. Liquid IDW containerized in totes (from monitoring well development) that was determined to be hazardous was transferred into 55-gallon drums and moved to the less than 90-day accumulation area. Hazardous waste labels were affixed to the drums showing generator information, accumulation dates, waste numbers, and the Kirtland EPA identification number. Drums were stored on appropriately sized secondary containment.

Non-hazardous liquid IDW generated from development and decontamination activities was disposed of by Chemical Transportation, Inc. and Clean Harbors at their respective facility located in Albuquerque, New Mexico. Non-hazardous waste manifests are included in Appendix H-3. Hazardous liquid IDW generated from development and decontamination activities was disposed of by Chemical Transportation, Inc. and Clean Harbors at Clean Harbors Deer Trail, LLC in Colorado. Hazardous waste manifests are included in Appendix H-4.

3.11.3 Liquid IDW – Purge Water

Analytical data from groundwater sampling was incorporated with the data collected during liquid IDW sampling of the development/decontamination water to generate both hazardous and non-hazardous waste profiles for disposal of purge water (Appendix H-5). The highest concentrations observed in IDW and groundwater samples were used to generate the waste profiles, thus eliminating the need to frequently sample liquid IDW generated during sampling activities. Hazardous purge water was transferred into 55-gallon, open-top metal drums placed on secondary containment pads located within the less than 90-day accumulation area. Non-hazardous purge water was placed in a single 275-gallon tote.

Hazardous liquid IDW generated from groundwater sampling activities was disposed of by Chemical Transportation, Inc. and Clean Harbors at Clean Harbors Aragonite, LLC in Grantsville, Utah and by Advanced Chemical Transportation at their local facility. The non-hazardous liquid IDW generated from

groundwater sampling activities was disposed of by Advanced Chemical Transportation at their local facility on March 19, 2019.

4. PILOT TEST RESULTS

This section describes the analytical results associated with the pilot test. Analytical data tables for each well are included as Tables 7 through 15.

4.1 Baseline Conditions

All pilot test wells were sampled prior to Phase 1 recirculation activities to establish pre-test baseline conditions, including measures of various tracers used, microbial community, geochemistry, contaminants (e.g., benzene and EDB), EDB degradation products (e.g., ethene, ethane, bromide), and EDB CSIA. As noted in Section 3.7, NAPL was observed at KAFB-106MW1-S during this period, and a sample of the NAPL was collected for analysis.

The pilot test was sited near existing well KAFB-106064, which contained EDB at concentrations of 17 µg/L (Second Quarter 2016; USACE, 2016c) and 9.3 µg/L (Fourth Quarter 2016; USACE, 2017c) and benzene at concentrations of 1,100 µg/L (Second Quarter 2016) and 1,000 µg/L (Fourth Quarter 2016) prior to installation of the new pilot test wells. After installation and development of the new pilot test wells, EDB and benzene concentrations of baseline groundwater samples at KAFB-106064 were measured at 143 µg/L and 4,730 µg/L, respectively. These increases at KAFB-106064 may have been the result of different types of sample pumps (bladder pumps) placed at different depths, heterogenous distribution of EDB and benzene in the subsurface, or perhaps due to increased mass transfer from residual NAPL during well installation and development. Higher concentrations were also observed at the other newly installed wells, where EDB ranged from 20.1 µg/L (KAFB-106IN1) to 432 µg/L (KAFB-106MW1-S) and benzene ranged from 586 µg/L (KAFB-106MW2-S) to 7,320 µg/L (KAFB-106MW1-S). The highest EDB and benzene concentrations observed were at KAFB-106MW1-S where NAPL was previously observed and collected (September 2017). EDB concentrations from baseline sampling and during the most recent sampling during the pilot test (Phase 4) are presented in Figure 8.

As will be further described below, representative microorganisms likely capable of EDB debromination were present in large numbers at shallow wells during the baseline evaluation, together with a reducing environment favorable for reductive debromination. Elevated concentrations of the EDB degradation products ethene, ethene, and bromide, together with more positive EDB $\delta^{13}C$ values (up to -5‰) at wells during the baseline evaluation, indicated that EDB degradation was likely ongoing or had previously occurred at the pilot test location. In this phased approach, the pilot test evaluated whether EDB degradation could be enhanced through addition of biostimulation amendments.

4.2 Amendment Distribution

Various tracers were amended to the recirculated groundwater to evaluate and verify the distribution and transport times between wells during the pilot test. These tracers included fluorescein dye (Phase 1), deuterium labeled water (^2H_2O, Phase 1), and iodide (Phase 2). Fluorescein is a fluorescent tracer often used in studies of groundwater flow in karst systems, ^2H_2O occurs as approximately 0.03% of water, and iodide is perhaps best known as an additive in iodized table salt, albeit at low concentrations. In addition to these tracers, biostimulation amendments added to the groundwater included a fermentable sodium lactate-based substrate with nutrients (WilClear Plus®) and DAP.

4.2.1 Tracer Distribution During Phase 1

Fluorescein was added together with deuterated water over a period of 24 hours while the recirculation system operated at 20 gpm (10 gpm at KAFB-106EX1, and 10 gpm at KAFB-106EX2). Three measurements of fluorescein concentrations of injected water collected directly from the KAFB-106IN1 sample port averaged 570 µg/L during the 24 hours of tracer injection, while background concentrations were non-detectable.

Figures 9 and 10 show measured fluorescein concentrations in samples collected from shallow and intermediate wells, respectively. The average transport times for the anaerobic shallow wells with high

EDB concentrations, as indicated by the date of maximum tracer contribution, were of primary interest and are provided in Table 16. These indicate that transport times increased with increasing distance, and no strong indications of preferential flow were apparent. Decreases in maximum concentrations with increasing distances from the injection well were indicative of dispersion within the subsurface as expected. After the 30 days of groundwater recirculation, the added fluorescein was redistributed in the groundwater and fluorescein concentrations among the shallow wells of the pilot test ranged from 3.7 µg/L (KAFB-106EX1) to 8.2 µg/L (KAFB-106EX2). After an additional month without groundwater recirculation (passive portion of Phase 1), fluorescein concentrations in the groundwater ranged from 4.1 µg/L (KAFB-106MW1-S) to 5.5 µg/L (KAFB-106064) among the shallow wells. Among the intermediate monitoring wells, fluorescein was observed at a maximum of 92 µg/L at KAFB-106MW2-I after 7 days of recirculation, and at a maximum of 50 µg/L at KAFB-106MW1-I after 30 days of recirculation. No fluorescein was observed at the existing intermediate monitoring well KAFB-106063 during Phase 1.

Deuterium labeled water was added at the same time as the fluorescein to ensure that at least one tracer was measurable during the tracer test. Three measurements of δ^2H values of the injected water averaged +590‰ during the 24 hours of tracer injection, while background δ^2H values at the test area ranged from -97‰ to -92‰. Figures 11 and 12 show measured δ^2H values of the water samples collected from shallow and intermediate wells. There is clear agreement between the fluorescein and δ^2H data, which provides confidence in observed transport times and water distribution. After the 30 days of groundwater recirculation, the deuterated water was redistributed in the groundwater and δ^2H values among the shallow wells of the pilot test ranged from -90‰ (KAFB-106EX1) to -84‰ (KAFB-106EX2). After an additional month without groundwater recirculation (passive portion of Phase 1), δ^2H values in the groundwater ranged from -89‰ (KAFB-106MW1-S) to -86‰ (KAFB-106MW2-S) among the shallow wells. Among the intermediate monitoring wells, δ^2H was observed at a maximum of +19‰ at KAFB-106MW2-I after 7 days of recirculation, and at a maximum of -62‰ at KAFB-106MW1-I after 30 days

of recirculation. For reference, Vienna Standard Mean Ocean Water has a δ^2H value of 0‰, by definition. As with fluorescein, no significant shift in δ^2H values was observed at the existing intermediate monitoring well KAFB-106063 during Phase 1.

The results from the Phase 1 tracer test indicated that the targeted treatment zone encompassing the shallow groundwater monitoring wells were hydraulically connected with the injection well. Additionally, it was evident that amendments were distributed in the treatment zone under the planned operating conditions. In particular, distribution of amendments to groundwater sampled by monitoring wells nearest to the injection well (KAFB-106MW2-S and KAFB-106064) occurred within 5 days of operation, suggesting a high likelihood of successfully distributing biostimulation amendments to favor reductive debromination of EDB. Based on these observations during Phase 1 operations, the recirculation system was operated similarly to distribute biostimulation amendments during Phases 2 and 3.

4.2.2 Tracer Distribution During Phase 2 and 3

Phase 2

Iodide, introduced as KI, was used as conservative tracer to verify distribution of water containing biostimulation amendments, and to allow for distinction between recirculated waters and background water. During the Phase 2 recirculation period, four samples of the injected groundwater were collected directly from the KAFB-106IN1 sample port while the chemical feed pump was operating. Iodide results from the injectate ranged from 18 to 26 mg/L. Adjusting for the timing of amendment cycles, the average concentration of iodide in reinjected water ranged from 15 to 18.6 mg/L.

Figures 13 and 14 show iodide concentrations of samples collected from shallow and intermediate wells, respectively, during the pilot test. The iodide data are consistent with observations made using other tracers during Phase 1, showing more rapid transport to the shallow monitoring wells nearest to the injection well (KAFB-106MW2-S and KAFB-106064), with amendments arriving at the more distant

extraction wells last. Also evident in the iodide data is that final concentrations observed at the nearest monitoring wells of 17 mg/L (KAFB-106MW2-S) and 18 mg/L (KAFB-106064) are equivalent with injected iodide concentrations (KAFB-106IN), which indicates that most of the groundwater observed at these wells was previously amended and reinjected. Groundwater at the more distant shallow groundwater monitoring well (KAFB-106MW1-S) was measured at 11 mg/L during the recirculation period, slightly lower than injected concentrations, indicating that a fraction of that water represented background conditions, or water that had previously been recirculated (during Phase 1) without iodide amendments. Lower concentrations of iodide observed at the extraction wells, 2.7 mg/L at KAFB-106EX2 and 1.3 mg/L at KAFB-106EX1, indicate longer transport times and dispersion consistent with Phase 1 results, and dilution due to extraction of water from both inside and outside the treatment zone. Consistent with Phase 1 tracer study results, elevated iodide concentrations up to 7.3 mg/L were observed at the nearest intermediate monitoring well (KAFB-106MW2-I), while transport to the other intermediate monitoring wells were slower, with an iodide measurement of 1.2 mg/L at KAFB-106MW1-I and no detections of iodide at KAFB-106063. Overall, iodide concentrations observed during the Phase 2 recirculation period indicated good distribution of injected waters, particularly within the treatment zone encompassing the shallow monitoring wells nearest to the injection well.

After recirculation of amendments at the start of Phase 2, a passive period without recirculation, but with continued monitoring, commenced and lasted more than four months and included four sampling events. Changes in iodide concentrations during the Phase 2 passive period were also informative. Iodide concentrations among the shallow groundwater monitoring wells nearest the injection well were fairly constant, with concentrations ranging from 17 to 22 mg/L for wells KAFB-106064 and KAFB-106MW2-S, and concentrations ranging from 13 to 16 mg/L for KAFB-106MW1-S. These iodide concentrations indicated that the sampled groundwater remained heavily influenced by treatment activities. Interestingly, iodide concentrations at KAFB-106EX1 increased from 1.3 mg/L at the end of recirculation to 8.3 mg/L during the Phase 2 passive period, and iodide concentrations at KAFB-106EX2

decreased from 2.7 mg/L at the end of recirculation to 0.3 mg/L during the Phase 2 passive period. While a decrease in iodide concentrations can result from iodide oxidation to iodate, the reducing conditions present at the site suggest this process should be limited. Rather the shifts in iodide concentrations at the outer boundaries of the treatment zone provide evidence that groundwater from outside the treatment zone is entering the treatment zone at KAFB-106EX2, and that groundwater with higher iodide concentrations from within the treatment zone are continuing to flow toward KAFB-106EX1. These data are consistent with a general west to east groundwater flow at the pilot site under ambient conditions. A similar decrease in iodide concentrations was also observed at the intermediate monitoring well KAFB-106MW2-I, indicating that this well may also be located close to the upgradient edge of the treatment zone and influenced by groundwater from outside the treatment zone during passive periods.

Phase 3

During Phase 3 amendment and recirculation activities, no additional iodide was added to the aquifer as KI; however, iodide already present in the subsurface after Phase 2 was redistributed. As such, the presence of iodide still served as a conservative tracer to allow for distinction between recirculated waters (from either Phase 2 or 3) and background groundwater with low iodide concentrations. At the end of the Phase 3 recirculation period, iodide concentrations among the shallow groundwater monitoring wells ranged from 4.5 mg/L (KAFB-106MW2-S) to 6.2 mg/L (KAFB-106MW1-S). This tight range indicates that amendments continued to be distributed well in the treatment zone during Phase 3. Interestingly, iodide concentrations of the intermediate monitoring wells increased during Phase 3 recirculation, with concentrations increasing to 15 mg/L (KAFB-106MW1-I), 10 mg/L (KAFB-106MW2-I), and 5.2 mg/L (KAFB-106063). While some redistribution of iodide was apparent during Phase 2 passive periods, these increases in iodide concentrations at the intermediate monitoring wells indicate that transport to these locations generally took longer than the period of active recirculation with iodide amendments during Phase 2 and continued to be redistributed to deeper locations during Phase 3 recirculation activities. This is logical considering the shallower screen intervals of both the injection well and extraction wells.

As during Phase 2, a passive period without recirculation, but with continued monitoring, commenced after recirculation ended. Iodide concentrations among the shallow groundwater monitoring wells nearest to the injection well varied little, with concentrations ranging from 6.3 mg/L (KAFB-106MW1-S) to 3.6 mg/L (KAFB-106MW2-S). These concentrations of iodide during the passive period indicated that the sampled groundwater remained heavily influenced by treatment activities. As before, iodide concentrations at KAFB-106EX1 increased from 4.6 mg/L at the end of recirculation to 6.2 mg/L during the Phase 3 passive period, and iodide concentrations at KAFB-106EX2 decreased from 4.6 mg/L at the end of recirculation to 0.5 mg/L during the Phase 3 passive period. These data remain consistent with a general west to east groundwater flow at the pilot site under ambient conditions. As during Phase 2, a similar decrease in iodide concentrations was also observed at the intermediate monitoring well KAFB-106MW2-I, again indicating that this well may be located close to the upgradient edge of the treatment zone and influenced by groundwater from outside the treatment zone during passive periods.

4.2.3 Distribution of Fermentable Substrate

Recirculated groundwater during Phase 2 and Phase 3 was amended with WilClear Plus®, which served as a fermentable substrate to stimulate debrominating organisms in the subsurface during the pilot test. As noted in the discussion of tracers above, reinjected groundwater was distributed throughout the treatment zone of the pilot test. However, due to possible sorption and retardation of organic compounds, the distribution of this fermentable substrate may have been slower than that of the tracers and observations of substrate and its immediate transformation products (e.g., acetate and propionate) provide additional insight regarding substrate distribution. During the Phase 2 recirculation period, three samples of the injected groundwater were collected directly from the KAFB-106IN1 sample port while the chemical feed pump was operating. Lactate concentrations of the injectate ranged from 140 to 154 mg/L. Adjusting for the timing of amendment cycles, the average concentration of lactate in reinjected water was approximately 110 mg/L. While measurements of reinjected substrate concentrations at KAFB-106IN1

were not made during Phase 3 recirculation activities, the system was operated under similar conditions, and lactate concentrations likely averaged near 100 mg/L as observed during Phase 2 recirculation.

Figure 15 shows measured lactate concentrations of samples collected at all the monitoring wells during the pilot test. While lactate was introduced to the subsurface at around 110 mg/L, concentrations at monitoring wells never exceeded 4 mg/L. Biological transformation of lactate, however, results in the production of both acetate and propionate, which were generally not detected in the injected groundwater during Phase 2. Figures 16 and 17 show measured acetate and propionate concentrations, respectively, from samples collected at all the monitoring wells during the pilot test. All wells showed clear increases in acetate concentrations, ranging from a lowest maximum of 44 mg/L in KAFB-106EX2 to a highest maximum of 151 mg/L in KAFB-106MW2-S. Likewise, propionate concentrations clearly increased due to biostimulation amendments, with only KAFB-106063 having no detections. Propionate concentrations in the wells ranged from a lowest maximum of 6.8 mg/L in KAFB-106MW1-I to a highest maximum of 74.9 mg/L in KAFB-106064. The observed increases in acetate and propionate strongly suggest that organic substrate capable of stimulating reductive debromination of EDB was distributed to most wells during the pilot test. As expected, concentrations of acetate and propionate decreased at many of the wells during passive periods, and extended monitoring to evaluate whether stimulated debrominating activity is sustained may be beneficial in the evaluation of the potential viability of this technology in the Corrective Measures Evaluation.

4.3 Microbial Analysis

As described in Section 4.2.3, amendments were supplied in the treatment area during Phase 2 and 3 to stimulate biological activity capable of reductive debromination of EDB. Figures 18 to 24 show populations of total eubacteria (EBAC), sulfate reducing bacteria (APS), methanogens (MGN), *Dehalobacter* spp. (DHBt), *Dehalobacter* DCM (DCM), *Dehalogenimonas* spp. (DHG), and *Desulfitobacterium* spp. (DSB) as determined by Microbial Insights' QuantArray-Chlor assay analysis.

Generally, the results indicated that the groundwater contained large populations of microorganisms prior to pilot test activities, with EBAC counts ranging from around 10^6 cells per milliliter (cells/mL) to 10^7 cells/mL, APS counts ranging from 10^4 cells/mL to 10^5 cells/mL, and representative organisms likely capable of EDB debromination (i.e., DHBt and DSB) ranging from around 10^4 to 10^5 cells/mL in baseline samples. This is consistent with microbial analyses from at KAFB-106064 in 2015 and an order of magnitude (OOM) or greater than observed at a background well in 2015 (USACE, 2016b). Given the large release of hydrocarbons at the site that can provide energy for diverse microbial communities, this high level of activity is not surprising. Fortunately, for the pilot test, the high number of likely debrominating organisms suggested that biostimulation to increase their activity was possible.

During the various phases of the pilot test, the measured populations increased by as much as two OOM depending on the organism and monitoring well examined. For populations of EBAC, much of this increase occurred during Phase 1 recirculation activities. This increase in EBAC after Phase 1 recirculation activity may be the result of organic carbon and nutrient redistribution in the treatment zone along with the increased groundwater flows due to recirculation. As with the high cell numbers prior to recirculation and amendments at the site, the large numbers of organisms capable of reductive debromination (10^5 to 10^6 cells/mL for DHBt, and around 10^5 cells/mL for DSB) after biostimulation, suggest that EDB debromination activity may have been stimulated during the pilot test.

Three microbial populations that increased by more than 2 OOM during pilot test activities are MGN, DHG, and DCM. Stimulation of methanogens was also evident from increases in methane within the treatment zone, as discussed below in Section 4.4. The increases in DHG and DCM occurred only after the addition of biostimulation amendments, but it is unclear whether these directly impacted EDB degradation. DHG are known to reductively dehalogenate 1,2-dichloroethane (Moe et al., 2009), the chlorinated analog of EDB, and DHG likely also dehalogenate EDB. DCM are particularly known for their ability to grow using dichloromethane (Justicia-Leon et al., 2012), but are also a species of

Dehalobacter (DHBt) that may include the ability to reductively dehalogenate other compounds. As with the larger numbers of DHBt and DSB present at the site, the growth of DHG and DCM suggest that EDB debromination activity may have been stimulated.

4.4 Geochemistry

DO, sulfate, iron, and methane were monitored during the pilot test as indicators of *in situ* redox conditions (Figures 25 to 28). DO was monitored during purging activities using a water quality meter (YSI™ ProDSS). Samples for sulfate, iron, and methane were collected from pilot test wells and submitted for laboratory analysis. All four parameters indicate that intended anaerobic conditions favoring reductive debromination of EDB occurred during the pilot test.

The pilot test was sited within a zone significantly impacted by hydrocarbons. DO concentrations at the shallow wells most impacted were low (less than 1 mg/L) under baseline conditions presumably due to past aerobic degradation of some of these hydrocarbons. Intermediate wells were not as impacted by hydrocarbons and generally had greater DO concentrations ranging from 1.7 mg/L at KAFB-106MW2-I to 7.4 mg/L at KAFB-106MW1-I. During Phase 1 recirculation without biostimulation amendments, DO decreased to less than 0.5 mg/L in the wells, except for extraction well KAFB-106EX1 (2.1 mg/L) and intermediate wells KAFB-106MW1-I (8.4 mg/L) and 106063 (1.9 mg/L). Extraction well KAFB-106EX1 is located near the eastern edge of the hydrocarbon and EDB plume and pumping may have drawn in more oxygen rich and less impacted groundwater from greater depths or from further east. As indicated by tracer tests, intermediate wells KAFB-106MW1-I and KAFB-106063 were less impacted by recirculated water during the Phase 1 recirculation period. During and after Phase 2 and Phase 3 recirculation periods in which amendments were introduced to groundwater, DO concentrations were below 1 mg/L at all wells, with most concentrations below 0.5 mg/L. Occasional DO concentrations above 1 mg/L were observed at the extraction wells KAFB-106EX1 and KAFB-106EX2 during passive periods. The extraction well samples were collected by briefly turning on the recirculation pumps and the

slightly elevated DO concentrations may have resulted from minor introductions of oxygen during this sampling process, or it may have resulted from collection of more oxygenated waters occurring *in situ*. The low DO concentrations within the treatment zone reflect favorable conditions for reductive debromination of EDB.

With the exception of KAFB-106EX2 (25 mg/L), sulfate concentrations in shallow wells were low (<5 mg/L) under baseline conditions presumably due to past sulfate reduction to sulfide. Sulfate reduction is indicative of bulk reducing conditions in the aquifer that favor EDB debromination and, under site conditions, the resulting sulfide typically precipitates together with dissolved metals (e.g., iron) to form sulfide minerals. Throughout the pilot test, sulfate concentrations at KAFB-106EX2 always exceeded 10 mg/L with a maximum concentration of 39.7 mg/L (Phase 2 passive), and may be the result of extracting groundwater richer in sulfate from outside the treatment zone. Intermediate wells were not as impacted by hydrocarbons and generally had greater sulfate concentrations under baseline conditions ranging from 16.4 mg/L at KAFB-106063 to 23.8 mg/L at KAFB-106MW1-I. During Phase 1 recirculation without biostimulation amendments, there was an increase in sulfate concentrations among the shallow wells as sulfate was redistributed at the site with concentrations ranging from 13.8 mg/L at KAFB-106064 to 28.5 at KAFB-106EX1, and among the intermediate wells with concentrations ranging from 15.4 mg/L at KAFB-106MW2-I to 26 mg/L at KAFB-106063. During the subsequent Phase 1 passive period, sulfate generally decreased in the wells to less than 5 mg/L due to sulfate reduction, but concentrations exceeding 10 mg/L were still observed at the extraction wells and two of the three intermediate wells (KAFB-106063 and KAFB-106MW1-I). During and after Phase 2 and Phase 3 recirculation periods, sulfate concentrations were below 5 mg/L in the wells (except for KAFB-106EX2) and were often not detected. During the recirculation events themselves, both extraction wells had sulfate concentrations exceeding 5 mg/L, and it is likely that much of this observed sulfate was drawn to the extraction wells from outside the treatment zone. The low sulfate concentrations within the treatment zone reflect favorable conditions for reductive debromination of EDB.

Due to the low solubility of ferric (Fe(III)) iron under circumneutral conditions as found at the site, dissolved iron concentrations are often assumed to reflect concentrations of more reduced ferrous (Fe(II)) iron. Minerals containing oxidized Fe(III) are fairly ubiquitous and elevated dissolved iron concentrations are usually indicative of iron reducing environments. Baseline measurements at the site indicated dissolved iron concentrations ranging from 1 mg/L (KAFB-106MW1-S) to 12 mg/L (KAFB-106MW2-S) in shallow wells, but concentrations at deeper, less impacted wells were all less than 1 mg/L. During and after Phase 2 and Phase 3 recirculation periods, dissolved iron concentrations increased due to iron reduction and maximum concentrations at individual wells ranged from 4.2 mg/L in KAFB-106EX2 to 22.1 mg/L in KAFB-106MW2-I. These elevated dissolved iron concentrations are consistent with bulk reducing conditions in the aquifer that are generally viewed as necessary for reductive debromination of EDB.

High methane concentrations in the subsurface are frequently indicative of methanogenesis that occurs under anaerobic conditions. Methane was observed during baseline measurements among shallow wells with concentrations ranging from 2 µg/L at KAFB-106MW1-S to 179 µg/L at KAFB-106064. The higher concentrations support the interpretation that the treatment zone was anaerobic prior to pilot test activities. During the Phase 1 recirculation period, methane concentrations dropped to less than 10 µg/L suggesting mixing from less methanogenic regions, increased abiotic losses (e.g., due to degassing under flow conditions), or methane oxidation. During the Phase 1 passive period, methane concentrations rebounded with a maximum concentration of 350 µg/L at KAFB-106MW2-S. During the Phase 2 recirculation period when lactate amendments were introduced, methane concentrations generally fell again, but increased by many OOM at several wells during the following passive period, with concentrations exceeding 10,000 µg/L at the injection well and KAFB-106MW2-S. After the Phase 3 recirculation period where lactate amendments were introduced, methane concentrations increased further and all wells, except for KAFB-106MW1-I, exceeded 100 µg/L. Shallow wells KAFB-106MW2-S and KAFB-106064 exceeded 10,000 µg/L. It should also be noted that the aqueous solubility of methane at 1

atmosphere is in the range of 20,000 µg/L, so it is feasible that minor pockets of gas-phase methane exist near wells with highest methane concentrations. These elevated methane concentrations are consistent with the increased populations of methanogens discussed in Section 4.3 and are indicative of reducing conditions favorable for EDB debromination.

4.5 Selected Contaminants of Interest

The primary objective of this pilot test was to evaluate the potential for enhanced anaerobic EDB biodegradation. Other contaminants co-located with EDB due to the nature of their common sources, including benzene and toluene, were not targeted by this pilot test. However, benzene and toluene can be used to help evaluate the fate of EDB. Both benzene and toluene are slightly less water soluble and more volatile than EDB, and their behavior helps constrain expectations for some abiotic EDB loss mechanisms, such as volatilization. Additionally, benzene and toluene are generally less susceptible than EDB to degradation under anaerobic conditions. As such, it is helpful to discuss the behaviors of benzene and toluene prior to discussing EDB degradation observed during the pilot test. Figures 29 to 31 show concentrations of benzene, toluene, and EDB, respectively for all wells of the pilot test, and Table 17 shows the reduction of benzene, toluene, and EDB associated with each Phase of the pilot test, as well as from baseline evaluation to the most recent Phase 4 sampling.

4.5.1 Benzene and Toluene

Benzene concentrations in shallow monitoring wells during the baseline evaluation ranged from 586 µg/L at KAFB-106MW2-S to 8,240 µg/L at KAFB-106MW1-S; benzene was not detected in the intermediate wells during baseline measurements. The measured benzene baseline concentrations were somewhat higher than those measured prior to pilot test well installation and development activities (benzene concentrations were approximately 1,000 µg/L at well KAFB-106064). This increase may have been the result of different types of sample pumps (bladder pumps) placed at different depths, heterogenous distribution of benzene in the subsurface, or perhaps due to increased mass transfer from residual NAPL

during well installation and development. It should be noted that the highest benzene concentration was observed at KAFB-106MW1-S where NAPL was present at the start of the pilot test (September 2017). During the Phase 1 recirculation period, benzene concentrations at shallow monitoring wells were more evenly distributed throughout the site and ranged from 2,730 µg/L (KAFB-106MW2-S) to 3,630 µg/L (KAFB-106MW1-S). With the exception of the injection well (KAFB-106IN1) and monitoring well KAFB-106MW1-S, benzene concentrations in shallow monitoring wells for the remainder of the pilot test ranged in concentration from 1,680 µg/L at KAFB-106MW2S to 4,400 µg/L at KAFB-106EX2, indicating limited losses due to biodegradation or abiotic mechanisms (e.g., volatilization, dilution). Benzene concentrations as low as 750 µg/L were observed at the injection well during Phase 4 sampling, but as noted in Section 3.4, this well was sampled using a bailer later in the pilot test after the dedicated submersible pump at the well stopped operating. Interestingly, benzene increased during the passive periods at the shallow well KAFB-106MW1-S to concentrations as high as 9,800 µg/L. The higher concentration at KAFB-106MW1-S is similar to baseline conditions prior to recirculation and may be the result of increased mass transfer from residual NAPL phases, as NAPL had previous been observed at that location.

Relative to the shallower monitoring wells, benzene concentrations at the intermediate wells during the pilot test were more variable and interpreting changes in these benzene concentrations is more challenging. As noted earlier, benzene was not detected at the intermediate wells during baseline measurements, but benzene concentrations increased after recirculation activities mixed groundwater over a greater depth. During Phase 2 and Phase 3 recirculation periods, benzene concentrations ranged from 1,200 µg/L to 3,600 µg/L at the intermediate wells. However, these benzene concentrations decreased to approximately 50 µg/L during the Phase 2 passive period at KAFB-106MW1-I and 106MW2-I, and to approximately 130 µg/L at KAFB-106MW2-I during Phase 4 passive monitoring. No significant decrease in benzene concentrations was noted at 106063. The observed decreases in benzene concentrations may be due to sorption in the soils or degradation, but may also be attributed in part to the influx of

groundwater not impacted by benzene as decreases in the iodide tracer were also observed in KAFB-106MW2-I.

Toluene concentrations in shallow monitoring wells during the baseline evaluation ranged from 1,540 µg/L at KAFB-106MW2-S to 13,200 µg/L at KAFB-106MW1-S, and toluene concentrations were less than 10 µg/L in all three intermediate monitoring wells, significantly less than the EPA maximum contaminant level (MCL) of 1,000 µg/L (EPA, 2009). As with benzene, the highest toluene concentration was observed at KAFB-106MW1-S where NAPL was present at the start of the pilot test. During the Phase 1 recirculation period, toluene concentrations at shallow monitoring wells were more evenly distributed throughout the site and ranged from 4,740 µg/L (KAFB-106MW2-S) to 9,330 µg/L (KAFB-106MW1-S). Toluene concentrations in the shallow monitoring wells for the remainder of Phases 1 through 3 ranged in concentration from 3,300 µg/L at the injection well to 19,500 µg/L at KAFB-106064, indicating limited losses due to biodegradation or abiotic mechanisms during this time (e.g., volatilization, dilution). Interestingly, toluene concentrations decreased during Phase 4 passive monitoring at shallow wells KAFB-106MW2-S to 150 µg/L (from 4,900 µg/L in the previous sampling event) and KAFB-106064 to 960 µg/L (from 11,000 µg/L in the previous sampling event). These decreases were far greater than for benzene and may indicate some anaerobic biodegradation of toluene.

As with benzene, toluene concentrations at the intermediate wells during the pilot test were more variable and interpreting changes in these toluene concentrations is challenging. Toluene impacts at the intermediate wells were limited during the baseline evaluation, but toluene concentrations increased after recirculation activities mixed groundwater over a greater depth. During Phase 2 and Phase 3 recirculation periods, toluene concentrations increased to concentrations as high as 19,000 µg/L at the intermediate wells, but as observed with benzene, toluene concentrations decreased during the following passive periods at wells KAFB-106MW1-I and KAFB-106MW2-I, decreasing to concentrations as low as 7.4 µg/L at KAFB-106MW2-I during Phase 4 monitoring. No significant decreases in toluene

concentrations were noted at KAFB-106063. As noted with benzene, the observed decreases in toluene concentrations at the intermediate wells may be due to sorption in the soils or degradation, but may also be attributed in part to the influx of groundwater not impacted by toluene as decreases in iodide tracer were also observed in KAFB-106MW2-I.

Overall, the trends among benzene and toluene concentrations suggest that losses during and after recirculation were limited at the shallower wells, but interpretation of trends at the intermediate wells is more challenging. With the exception of toluene decreases noted among shallow monitoring wells during Phase 4 monitoring, the reasonably constant benzene and toluene concentrations observed in the shallow zone throughout the pilot test provide a good point of comparison to help evaluate EDB degradation. As noted below, decreases in EDB concentrations much greater than observed for benzene and toluene provide strong evidence of EDB degradation, as other abiotic loss mechanisms would likely be mirrored in benzene and toluene data.

4.5.2 EDB

EDB Concentrations

EDB was the primary contaminant targeted by these pilot test efforts. EDB concentrations in shallow monitoring wells during the baseline evaluation ranged from 20.1 µg/L at KAFB-106IN1 to 432 µg/L at KAFB-106MW1-S, and among the intermediate wells EDB was only detected at KAFB-106MW2-I with a concentration of approximately 0.1 µg/L. These baseline EDB concentrations were somewhat higher than that measured prior to pilot test well installation, when EDB concentrations at KAFB-106064 were 9.3 µg/L (Fourth Quarter 2016 USACE, 2017c) and 17 µg/L (Second Quarter 2016; USACE, 2016c). This increase may have been the result of different types of sample pumps (bladder pumps) placed at different depths, heterogenous distribution of EDB in the subsurface, or perhaps due to increased mass transfer from residual NAPL during well installation. As with benzene and toluene, the highest EDB

concentration during the baseline evaluation was observed at KAFB-106MW1-S where NAPL was present at the start of the pilot test.

EDB concentrations at shallow monitoring wells were more evenly distributed during the Phase 1 recirculation period and ranged from 50.4 µg/L (KAFB-106EX1) to 137 µg/L (KAFB-106EX2), with EDB concentrations at wells closer to the injection well ranging from 68 µg/L (KAFB-106MW2-S) to 104 µg/L (KAFB-106MW1-S). Compared to the EDB concentrations observed during Phase 1 recirculation, concentrations at the shallow monitoring wells decreased during the following Phase 1 passive period, with EDB reductions of approximately 75% observed at wells KAFB-106064 (20.3 µg/L), KAFB-106EX1 (12.9 µg/L), and KAFB-106MW2-S (15 µg/L) after the one-month passive period. This is slightly less than a one-log reduction (i.e., 90%), as indicated in Table 17. Decreases of similar magnitude were not observed for benzene and toluene, where losses were less than 25% and, in most cases, less than 10% with some increases in concentration. These observations are consistent with some ongoing EDB degradation that may have been further stimulated by groundwater recirculation and nutrient redistribution from other locations within the aquifer. Whether this apparent EDB degradation would have been sustained for longer periods was not assessed during this pilot test as Phase 2 recirculation and biostimulation activities commenced as planned after the approximately one-month passive period. Decreases in EDB concentrations were observed at the intermediate monitoring wells too, with losses up to 95%. However, these EDB reductions were mirrored in benzene and toluene data, and may be due to degradation or other processes, such as sorption in the soils or influx of unimpacted groundwater.

During the last sampling of the Phase 2 recirculation period, the range of EDB concentrations observed at shallow monitoring wells was less variable, ranging from 66.4 µg/L at KAFB-106MW1-S to a maximum of 90.9 µg/L at KAFB-106EX2. This indicated good redistribution of EDB within the treatment zone and provides a good point of comparison for changes during the subsequent passive period. Except for

KAFB-106EX2, where no change in EDB concentration was observed, EDB concentrations decreased during the Phase 2 passive period by approximately 90% or more. As indicated in Table 17, this corresponds to one-log (90%) to three-log reduction (99.9%) relative to maximum concentrations measured during Phase 2 recirculation. Notably, EDB was not detected at the injection well (KAFB-106IN1) or KAFB-106MW2-S at the end of the passive period, with detection limits of approximately 0.02 µg/L. As mentioned earlier, no significant decreases of benzene and toluene were observed, providing evidence that abiotic losses (e.g. volatilization) were limited, and that anaerobic EDB degradation was stimulated during this passive period. As during the Phase 1 passive period, decreases in EDB concentrations were observed at the intermediate monitoring wells, but decreases in benzene and toluene were also observed, such that changes were not exclusive to EDB. In addition to EDB, benzene, and toluene degradation, other possible explanations leading to these decreases at intermediate wells include sorption in the soils or influx of unimpacted groundwater.

Due to the large decrease in EDB concentrations during Phase 2 and apparent *in situ* biodegradation activity of indigenous debrominating organisms, a decision was made to delay the planned bioaugmentation of the treatment zone with exogenous debrominating organisms (USACE, 2018a). Instead, additional recirculation with more organic substrate and nutrients was performed during Phase 3 with the goal of expanding the biological treatment zone. Interestingly, and in contrast to Phase 1 and Phase 2 recirculation activities and in contrast to other solutes (e.g., iodide, benzene, toluene), EDB concentrations observed during Phase 3 recirculation exhibited a new pattern. Measured EDB concentrations at the extraction wells were reasonably constant during this recirculation period, with concentrations at KAFB-106EX1 ranging from 11 to 20 µg/L, and concentrations at KAFB-106EX2 ranging from 47 to 97 µg/L. Based on flows through the treatment system from the extraction wells, EDB in the reinjected groundwater ranged from approximately 35 µg/L to 45 µg/L, yet concentrations at the monitoring wells were less, ranging from approximately 3 µg/L at KAFB-106064 to 11 µg/L at KAFB-106MW1-S. Notably, EDB concentrations also decreased at the shallow wells during this

recirculation period with time. Observing concentrations lower than injected concentrations and decreasing EDB concentrations during the recirculation period suggests that EDB degradation was stimulated and occurred between the injection well and the shallow monitoring wells during the Phase 3 recirculation period. Similar decreases in concentrations were not observed for benzene or toluene. Except for KAFB-106EX2 and KAFB-106MW1-S, where changes in EDB concentrations were less, EDB concentrations during the subsequent passive period decreased by 95% or more relative to maximums observed during the preceding recirculation period. As indicated in Table 17, these decreases corresponded to one-log (90%) to three-log reduction (99.9%) relative to maximum concentrations measured during Phase 3 recirculation, and EDB was detected at concentrations less than the EPA MCL of 0.05 µg/L (EPA, 2009) at the injection well (KAFB-106IN1) and wells KAFB-106MW2-S and KAFB-106064. As mentioned earlier, no significant losses of benzene and toluene were observed, providing evidence that abiotic losses (e.g. volatilization) were limited, and that anaerobic EDB degradation was stimulated during this passive period. Overall, the footprint of enhanced EDB degradation appeared larger after Phase 3 activities than during Phase 2. As during the Phase 1 and 2 passive periods, decreases in EDB concentrations were observed among the intermediate monitoring wells during Phase 3, but because similar decreases in benzene and toluene were also observed, such changes were not exclusive to EDB and could not be solely attributed to reductive debromination.

Phase 4 extended monitoring of the pilot test performance commenced after Phase 3, and one sampling round has been completed to date that occurred approximately four months after Phase 3 recirculation activities were halted. While no significant rebound in EDB concentrations was noted during this sampling event, EDB decreased by an additional 80% at KAFB-106MW1-S since the last passive sampling event during Phase 3. Figure 8 shows the EDB concentrations measured during baseline and Phase 4 sampling events at all pilot test wells. Table 17 and Figure 32 show the overall extent of reduction in EDB, benzene, and toluene from baseline measurements (or the highest observed concentrations for intermediate wells) to the most recent Phase 4 sampling event. With the exception of

KAFB-106EX2, EDB reductions were greater than 97% in the shallow wells, with four of the wells exhibiting greater than two-log reductions (99%), and two of the wells exhibiting greater than three-log reductions (99.9%). Further, three of the wells were below the EPA MCL of 0.05 µg/L (EPA, 2009) for EDB during their most recent sampling event (Figure 8). Except for decreases of toluene at two shallow wells during the most recent sampling, and at intermediate wells, reductions of benzene and toluene were much more limited. The large and rapid reductions in EDB concentrations in an environment conducive to reductive debromination strongly suggests that *in situ* anaerobic biodegradation of EDB occurred.

EDB Degradation Products

Reductive debromination of EDB by various debrominating organisms often results in stoichiometric production of one mole of ethene and two moles of bromide for each mole of EDB reduced (Koster van Groos et al, 2018). Under reducing conditions, ethene can also be further transformed to ethane, and both gases as well as bromide are reasonably stable under anaerobic conditions. Elevated concentrations of these degradation products can provide additional evidence of reductive debromination of EDB under both baseline conditions and during pilot test efforts.

Based the assumption of reductive debromination and its stoichiometry, equivalent quantities of EDB degraded can be estimated using measured concentrations of ethene and ethane:

$$C_{EDB-degraded} = MW_{EDB} * \left(\frac{C_{ethene}}{MW_{ethene}} + \frac{C_{ethane}}{MW_{ethane}}\right)$$

Where *C* indicates concentrations in units of mass per volume, and *MW* indicates the molecular weights of the respective compounds. Figures 33 and 34 show estimated equivalents of EDB degraded based on quantities of ethene and ethane products observed at the shallow and intermediate wells, respectively. In shallow wells, estimated equivalents of EDB converted to ethene and ethane during the baseline evaluation ranged from approximately 20 µg/L at KAFB-106EX1 to over 130 µg/L at both

KAFB-106064 and KAFB-106MW2-S, indicating that there was likely debromination occurring prior to any pilot test activities. During the Phase 1 recirculation period, these estimates of EDB equivalents degraded decreased and ranged from 5 µg/L (KAFB-106MW2-S and KAFB-106EX2) to 24 µg/L (KAFB-106064). Many geochemical measures (e.g., sulfate, iron, methane) indicated more oxidizing conditions during this recirculation period, which may be attributed to redistribution of the low concentrations of DO observed at KAFB-106EX1 throughout the treatment zone. The small quantities of DO introduced during this process may have helped facilitate some ethene and ethane consumption. During the Phase 1 passive period, increases in estimates of EDB equivalents degraded based on ethene and ethane were noted, which is consistent with the decreases in EDB concentrations during this period described earlier, providing further evidence of EDB degradation prior to biostimulation efforts.

During and after the Phase 2 recirculation period, estimates of EDB equivalents degraded based on ethene and ethane increased to magnitudes similar to initial EDB concentrations, suggesting substantial conversion. The highest estimate of EDB equivalents degraded occurred at KAFB-106MW1-S after Phase 3 biostimulation efforts with an estimated concentration of approximately 270 µg/L. This is also the location where the highest initial EDB concentrations were noted during the baseline evaluation with a concentration of over 400 µg/L. Interestingly, decreases in ethene and ethane occurred with time at the injection well (KAFB-106IN1) and KAFB-106MW2-S during the Phase 2 and Phase 3 passive periods, despite large EDB reductions at these locations. This decrease in ethene and ethane could indicate slowed production of these compounds due to the lower parent EDB concentrations, together with some ethene or ethane degradation or partitioning into gas-phase pockets that may be present due to methanogenesis. As described in Section 4.4, very high methane concentrations were observed at these wells that could reflect the presence of gas-phase methane.

Reductive debromination of EDB often results in the production of two moles of bromide for each mole of EDB degraded. However, two challenges for examining bromide released during this process are the

presence of bromide in background water and that expected bromide released from EDB could be quite small. For example, degradation of 100 µg/L of EDB results in release of just 0.085 mg/L of bromide, which may be challenging to measure. One method for distinguishing the release of bromide from background water is to examine the ratio of bromide to chloride as these anions are typically correlated due to their frequent common sources. Deviation from a constant ratio in favor of greater bromide might indicate a unique source of bromide, such as EDB debromination.

Figure 35 shows concentrations of bromide vs. chloride for all the wells of the pilot test, and Figures 36 and 37 show the bromide to chloride ratio with time for the shallow and intermediate wells, respectively. The dashed red line in each of these figures approximates the background ratio of 0.0089 based on previous studies (USACE, 2016b). Examining these figures, very few samples were enriched in chloride relative to bromide compared to the background, but many samples were enriched in bromide. The largest apparent increase in bromide to chloride ratio occurred during and after the Phase 3 recirculation period. This coincided with use of a new certified analytical laboratory after the original analytical laboratory measuring bromide ceased operations. Several of the increases in bromide appear to be on the order of 1 mg/L, which corresponds to degradation of approximately 1,200 µg/L of EDB – much more than was observed in aqueous phase measurements during the pilot test. One explanation for this large excess of bromide could be stimulation of debrominating organisms within the treatment zone and continuing release and degradation of EDB from a separate phase source (e.g. NAPL), which would certainly be of interest.

Carbon Isotope Analysis of EDB

Examining the isotope composition of pollutants provides a novel measure of their degradation (Hunkeler et al., 2008, Wilson et al., 2008). As EDB degrades, its carbon (C) stable isotope composition can change as EDB with a heavy C isotope substitution (^{13}C) degrades slightly slower than EDB with only ^{12}C (Koster van Groos et al, 2018). The isotope composition of EDB does not shift as a result of dilution and

volatilization is expected to have negligible impact on isotope composition under site conditions. As such, a shift in EDB $\delta^{13}C$ from more negative values to more positive values (corresponding to an increase in relative ^{13}C abundance) provides additional evidence of EDB degradation. Figure 38 shows $\delta^{13}C$ values of EDB sampled at shallow monitoring wells during the pilot test, as well as of EDB extracted from the NAPL recovered at well KAFB-106MW1-S during baseline studies. Unfortunately, it was not possible to measure the isotope composition of each sample, as low EDB concentrations and high concentrations of other VOCs, such as benzene and toluene complicated the analyses.

The $\delta^{13}C$ values of EDB in the NAPL sample and at well KAFB-106EX2 were consistently the most negative with values of -16‰ or lower, which indicates they were the least degraded. This is consistent with the other measures of EDB degradation discussed earlier and as shown in Table 17 and Figure 32. The baseline evaluation performed with samples collected prior to the pilot test included EDB $\delta^{13}C$ values as high as -5‰, significantly higher than the EDB of the NAPL and located at KAFB-106EX2, indicating significant isotope fractionation and providing further evidence of EDB degradation under ambient conditions at the site prior to the pilot test. $\delta^{13}C$ values of EDB during passive periods of the pilot test were typically more positive than preceding recirculation periods, providing further evidence of enhanced degradation during passive periods. The highest $\delta^{13}C$ value of EDB (+5‰) was from a sample collected at KAFB-106EX1 during the Phase 2 passive period and represents a large shift in isotope composition and significant EDB degradation, yet we suspect that if isotope analyses were feasible with lower concentration samples even higher $\delta^{13}C$ values would have been observed. Overall, the increases in $\delta^{13}C$ values of EDB observed provide strong supporting evidence that EDB degraded during the pilot test.

5. CONCLUSIONS

5.1 Conclusions

The primary objective of this pilot test was to demonstrate anaerobic ISB as a treatment technology targeting EDB in impacted groundwater at Kirtland AFB. Based on the pilot test data reviewed here, the following conclusions regarding the effectiveness of ISB for EDB treatment were made:

- Enhanced ISB of EDB was successfully demonstrated (see Figure 32 and Figure 8). EDB degradation was evident during the pilot test with a greater than three-log reduction (99.9%) to below the EPA MCL of 0.05 µg/L at wells KAFB-106MW2-S and KAFB-106064 after biostimulation efforts. EDB degradation was evident through comparison with benzene and toluene concentrations, and the production of EDB degradation products ethene, ethane, and bromide suggested that this degradation occurred by reductive debromination. Higher EDB $\delta^{13}C$ values (observed to be as high as +5‰ at KAFB-106EX1) provided additional isotopic evidence of EDB degradation.

- Baseline measurements indicated that EDB was likely degrading prior to the pilot test. QuantArray-Chlor analyses indicated that microorganisms likely capable of degrading EDB were present during the baseline assessment and throughout the pilot test. During the baseline assessment, degradation products of reductive debromination (e.g., ethene, ethane, bromide) were present in the groundwater and EDB was observed to have more positive $\delta^{13}C$ values (up to -5‰). These all indicate EDB degradation prior to ISB treatment.

- Tracer and biostimulation amendments were distributed throughout the treatment zone, with highest concentrations of iodide and propionate observed at wells KAFB-106MW1-S, KAFB-106MW2-S, and KAFB-106064 (see Figure 13 and 17).

- Measurements of DO, sulfate, iron, and methane indicate that reducing conditions favorable for reductive debromination of EDB were achieved throughout the site.

- During the pilot test, the performance of one extraction well (KAFB-106EX2) and the injection well (KAFB-106IN1) deteriorated, but the performance of these wells remained sufficient to finish the pilot test.

- ISB appears to be a promising approach targeting EDB source areas in Kirtland AFB groundwater. While debromination may be occurring at Kirtland AFB without additional support, the addition of biostimulation amendments and mixing of water appeared to enhance reductive debromination.

6. REFERENCES

CH2M HILL. 2001. *Stage 1 Abatement Plan Report for the Bulk Fuels Facility (ST-106)*. Kirtland Air Force Base, New Mexico. May 21.

EPA. 2009. *National Primary Drinking Water Regulations*, EPA 816-F 09-004, U.S. Environmental Protection Agency, Washington, D.C.

Hunkeler, D., Meckenstock, R. U., Sherwood Lollar, B., Schmidt, T. C., & Wilson, J. T. 2008. A Guide for Assessing Biodegradation and Source Identification of Organic Ground Water Contaminants using Compound Specific Isotope Analysis (CSIA), EPA 600/R-08/148. *USEPA Publication*, (December), 1–82. https://doi.org/EPA/600/R-08/148.

Justicia-Leon, S. D., Ritalahti, K. M., Mack, E. E., & Löffler, F. E. 2012. Dichloromethane fermentation by a Dehalobacter sp. in an enrichment culture derived from pristine river sediment. *Applied and Environmental Microbiology, 78(4), 1288–1291*. https://doi.org/10.1128/AEM.07325-11.

Koster Van Groos, P. G., Hatzinger, P. B., Streger, S. H., Vainberg, S., Philp, R. P., & Kuder, T. 2018. Carbon Isotope Fractionation of 1,2-Dibromoethane by Biological and Abiotic Processes. *Environmental Science and Technology, 52(6)*. https://doi.org/10.1021/acs.est.7b05224.

Kuder, T., Wilson J.T., Philip, P., He, Y.T. 2012. Carbon Isotope Fractionation in Reactions of 1,2-Dibromoethane with FeS and Hydrogen Sulfide. Environ. Sci. Technol. 46, 7495-7502.

Moe, W. M., Yan, J., Nobre, M. F., da Costa, M. S., & Rainey, F. A. 2009. Dehalogenimonas lykanthroporepellens gen. nov., sp. nov., a reductively dehalogenating bacterium isolated from chlorinated solvent-contaminated groundwater. *International Journal of Systematic and Evolutionary Microbiology, 59(11), 2692–2697*. https://doi.org/10.1099/ijs.0.011502-0.

NMED. 2019. February 25, 2019 correspondence from Mr. John Kieling, Bureau Chief to Colonel Richard W. Gibbs, Base Commander, 377 AB/CC, Kirtland AFB, NM and Mr. Chris Segura, Chief, Installation Support Section, AFCEC/CZOW, Kirtland AFB, NM, *re: Bulk Fuels Facility Spill, Solid Waste Management Unit ST-106/SS-11, Kirtland Air Force Base, EPA ID# NM9570024423, HWB-KAFB-19-MISC.*

NMED. 2018. August 7, 2018 correspondence from Mr. Juan Carlos Borrego, Deputy Secretary, Environment Department, to Colonel Richard W. Gibbs, Base Commander, 377 AB/CC, Kirtland

AFB, NM and Mr. Chris Segura, Chief, Installation Support Section, AFCEC/CZOW, Kirtland AFB, NM, *re: Phase 3 Ethylene Dibromide In Situ Biodegradation Pilot Test, Notification letter, Bulk Fuels Facility, Solid Waste Management Unit ST-106/SS-11, Kirtland Air Force Base, EPA ID# NM9570024423, HWB-KAFB-13-MISC.*

NMED. 2017. Correspondence email from Diane Agnew, NMED HWB to Adria A. Bodour, AFCEC/CZRX, RE: Requesting NMED Approval for Development Postpone of Monitoring, Extraction, and Injection Wells for EDB Bioremediation Pilot Test Work Plan, January 30.

NMED. 2010. Hazardous Waste Treatment Facility Operating Permit, EPA ID No. NM9570024423, Issued to U.S. Air Force for the Open Detonation Unit Located at Kirtland Air Force Base, Bernalillo County, New Mexico, by the NMED Hazardous Waste Bureau. July.

USACE. 2018a. *Phase 3 Ethylene Dibromide In Situ Biodegradation Pilot Test, Notification letter, Bulk Fuels Facility, Kirtland Air Force Base, New Mexico.* Prepared by Aptim Federal Services, LLC for the USACE Albuquerque District under USACE Contract No. W9128F-12-D-0003, Task Order 0025. July.

USACE, 2018b. Quarterly Report – April-June 2018, Bulk Fuels Facility, Solid Waste Management Unit ST-106/SS-111, Kirtland Air Force Base, New Mexico. Prepared by EA Engineering, Science, and Technology, Inc., PBC for the USACE Albuquerque District under USACE Contract No. W912DR-12-D-0006, Delivery Order DM01. September.

USACE. 2017a. *Borehole Abandonment Activities Report, Performed as part of the construction effort for the Eythlene Dibromide In Situ Biodegradation Pilot Test, Bulk Fuels Facility, Kirtland Air Force Base, New Mexico*. Prepared by Aptim Federal Services, LLC for the USACE Albuquerque District under USACE Contract No. W9128F-12-D-0003, Task Order 0025. March.

USACE. 2017b. *Corrective Action Report fo Accidental Soil Release, Kirtland Air Force Base, New Mexico.* Prepared by Aptim Federal Services, LLC for the USACE Albuquerque District under USACE Contract No. W9128F-12-D-0003, Task Order 0025. February.

USACE. 2017c. Quaterly Monitoring Report April-June 2016, Bulk Fuels Facility, Solid Waste Management Unit ST-106/SS-111. Prepared by EA Engineering, Science, and Technology, Inc., PBC for the USACE Albuquerque District under USACE Contract No. W912DR-12-D-0006, Delivery Order DM01. March.

USACE. 2016a. *Ethylene Dibromide In Situ Biodegradation Pilot Test Work Plan, Bulk Fuels Facility, Kirtland Air Force Base, New Mexico*. Prepared by CB&I Federal Services, LLC. for the USACE Albuquerque District under USACE Contract No. W9128F-12-D-0003, Task Order 0025. December.

USACE. 2016b. Quarterly Pre-Remedy Monitoring and Site Investigation Report for October – December 2015 and Annual Report for 2015, Bulk Fuels Facility, Solid Waste Management Unit ST-106/SS-111. Prepared by CB&I Federal Services, LLC. for the USACE Albuquerque District under USACE Contract No. W912DY-10-D-0014, Delivery Order 0002. April.

USACE. 2016c. Quarterly Monitoring Report, October-December 2016 and Annual Report for 2016, Bulk Fuels Facility, Solid Waste Management Unit ST-106/SS-111. Prepared by EA Engineering, Science, and Technology, Inc., PBC for the USACE Albuquerque District under USACE Contract No. W912DR-12-D-0006, Delivery Order DM01. September.

USACE. 2011a. *Interim Measures Work Plan, Bulk Fuels Facility (BFF) Spill, Solid Waste Management Units ST-106 and SS-111, Kirtland Air Force Base, Albuquerque, New Mexico*. Prepared by Shaw Environmental & Infrastructure, Inc. for the USACE Albuquerque District under USACE Contract No. W912DY-10-D-0014, Delivery Order 0002. March.

USACE. 2011b. *Groundwater Investigation Work Plan, Bulk Fuels Facility (BFF) Spill, Solid Waste Management Units ST-106 and SS-111, Kirtland Air Force Base, Albuquerque, New Mexico.* Prepared by Shaw Environmental & Infrastructure, Inc. for the USACE Albuquerque District under USACE Contract No. W912DY-10-D-0014, Delivery Order 0002. March.

USGS. 2016. *Definition of Land Survey Objective / Measuring Points and Land Survey Campaign among the Kirtland Air Force Base Monitoring Well Network*. Prepared by the USGS for Kirtland AFB.

Wilson, J. T., Banks, K., Earle, R., He, Y., Kuder, T., & Adair, C. (2008). Natural attenuation of the lead scavengers 1,2-dibromoethane (EDB) and 1,2-dichloroethane (1,2-DCA) at motor fuel release sites and implications for risk management. *EPA Report 600/R-08/107. U.S. EPA, Office of Research and Development, National Risk Management Research Laboratory, Ada, OK.*, (September), 1–74. Retrieved from http://purl.access.gpo.gov/GPO/LPS77736

FIGURES

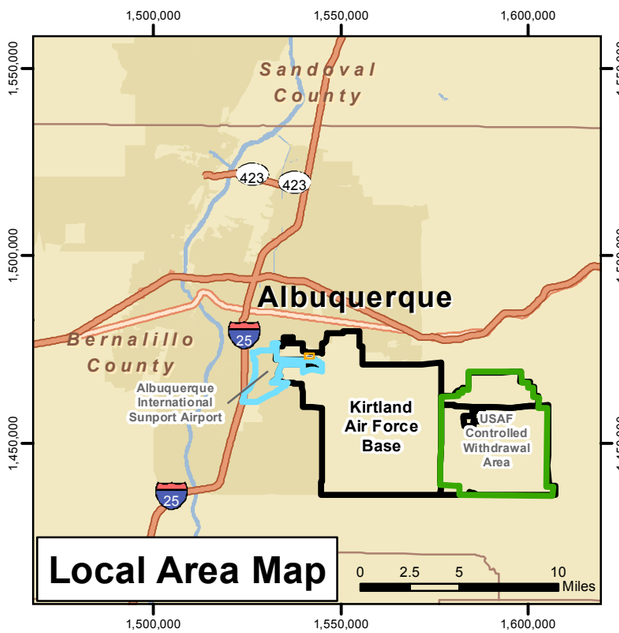

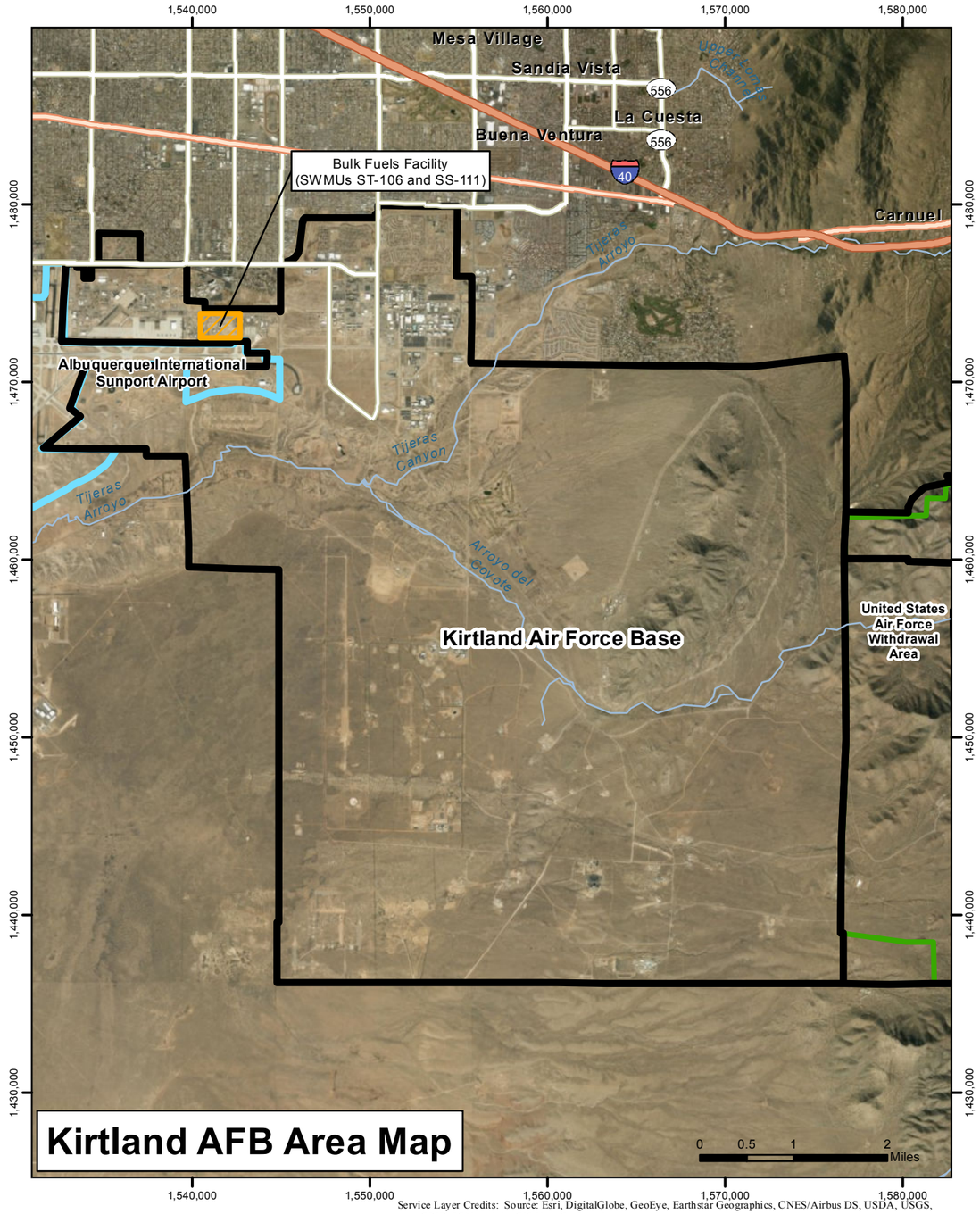

Service Layer Credits: Source: Esri, DigitalGlobe, GeoEye, Earthstar Geographics, CNES/Airbus DS, USDA, USGS, AeroGRID, IGN, and the GIS User Community

Legend

- Installation Location
- Kirtland Air Force Base Installation Boundary
- Bulk Fuels Facility (SWMUs ST-106 and SS-111)
- Albuquerque International Sunport Airport
- United States Air Force Withdrawal Area
- Major Highways
- Highways
- Major Roads
- Rivers
- Urban Areas
- Counties
- States

SWMUs = Solid Waste Management Unit
AFB = Air Force Base
USAF = United States Air Force

N

Revision Date: 02/20/19

Projection : NAD83 State Plane New Mexico Central FIPS3002 Feet

ETHYLENE DIBROMIDE IN SITU BIODEGREDATION
PILOT TEST REPORT
KIRTLAND AIR FORCE BASE, NEW MEXICO

FIGURE 1

AREA LOCATION MAP

H:\Kirtland_AFB\GIS_Documents\Project_Maps_bak\EDIB_Pilot_Test_Report\KAFB_001_loc_map.mxd 02/20/19

Legend

- Existing Monitoring Well
- Pilot Test Injection/Extraction Well
- Pilot Test Monitoring Well
- Fence Line
- Natural Gas Line
- Wastewater Line
- Water Line
- Electrical Cable Line
- Construction Fence Area
- Truck Exit Route
- Pilot Test Trench Location for Water Pipe and Subsurface Electrical
- Pilot Test System Location
- Pilot Test Existing Electrical Tie-in
- Electrical Service Line
- Storage Shed

KAFB = Kirtland Air Force Base

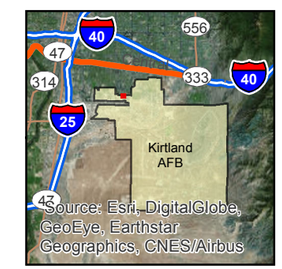

SITE LOCATION

Revision Date: 03/18/19

N

0 15 30 60

Feet

1 inch = 60 feet

Projection : NAD83 State Plane New Mexico Central FIPS3002 Feet

ETHYLENE DIBROMIDE IN SITU BIODEGREDATION
PILOT TEST REPORT
KIRTLAND AIR FORCE BASE, NEW MEXICO

FIGURE 2

SITE LOCATION MAP

H:\Kirtland_AFB\GIS_Documents\Project_Maps_bak\EDIB_Pilot_Test_Report\ECarpioESRI Data Solutions TeamKAFB_E002_est_electr_zoom.mxd 03/18/19

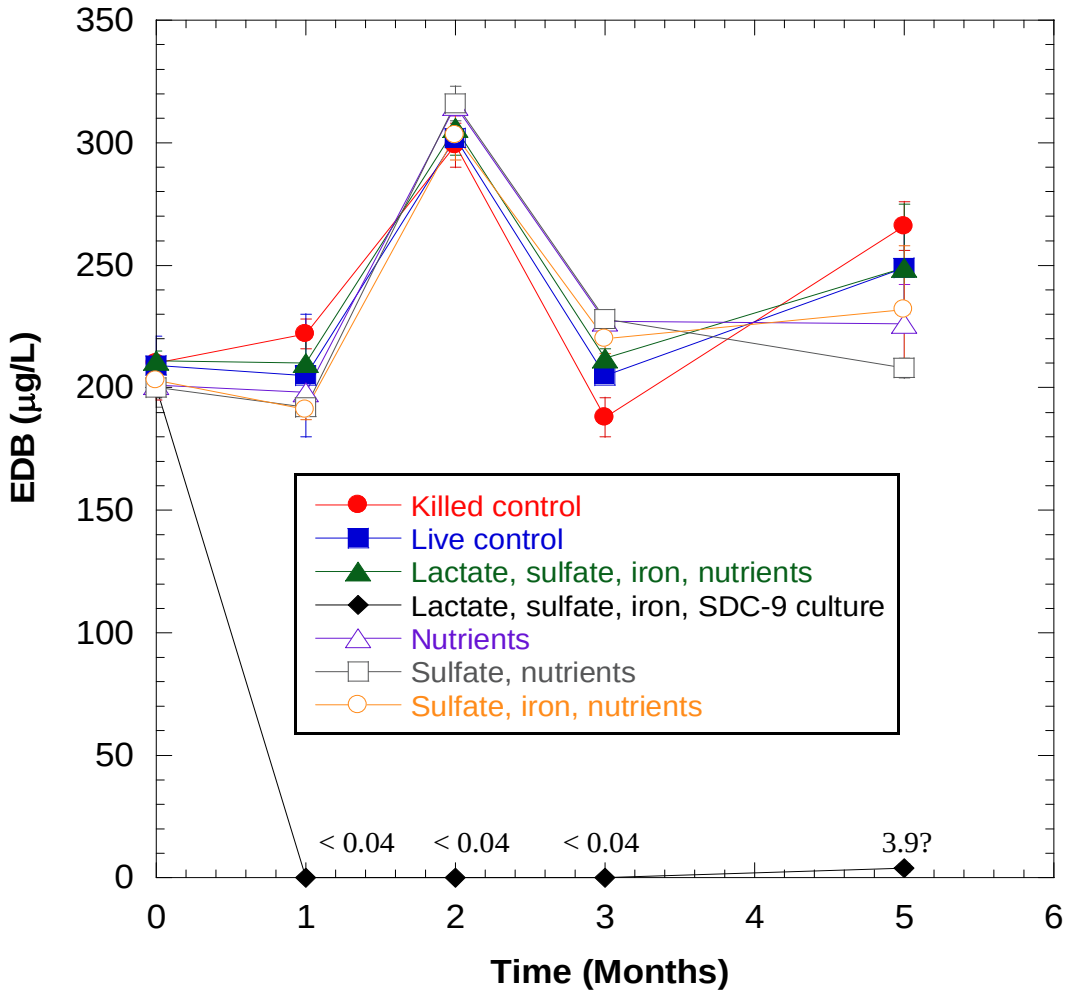

Note: the treatments that were amended with the dehalogenating culture SDC-9 showed increased degradation of EDB.

Figure 3. Concentrations of EDB in Anaerobic Microcosms Prepared with Aquifer Samples Collected from the BFF Source Area

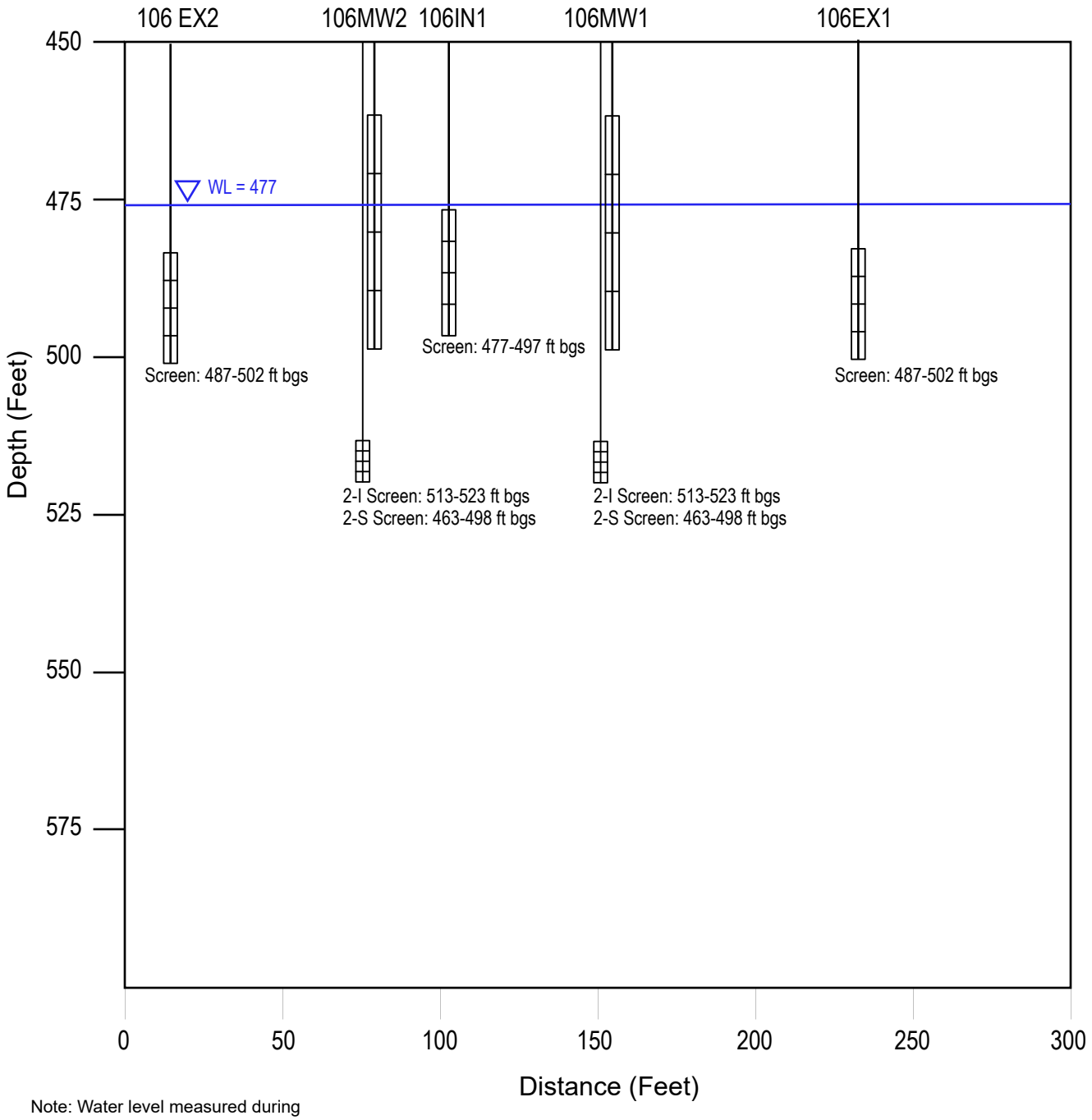

Note: Water level measured during drilling and well installation activities

LEGEND:

106MW1-S SCREEN INTERVAL

EX = Extraction Well
IN = Injection Well
MW = Monitoring Well
ft bgs = feet below ground surface

APTIM

APTIM
17 Princess Road
Lawerenceville, New Jersey 08648

ETHYLENE DIBROMIDE IN SITU BIODEGREDATION
PILOT TEST REPORT
KIRTLAND AIR FORCE BASE, NEW MEXICO

FIGURE 4

PILOT TEST WELL LAYOUT

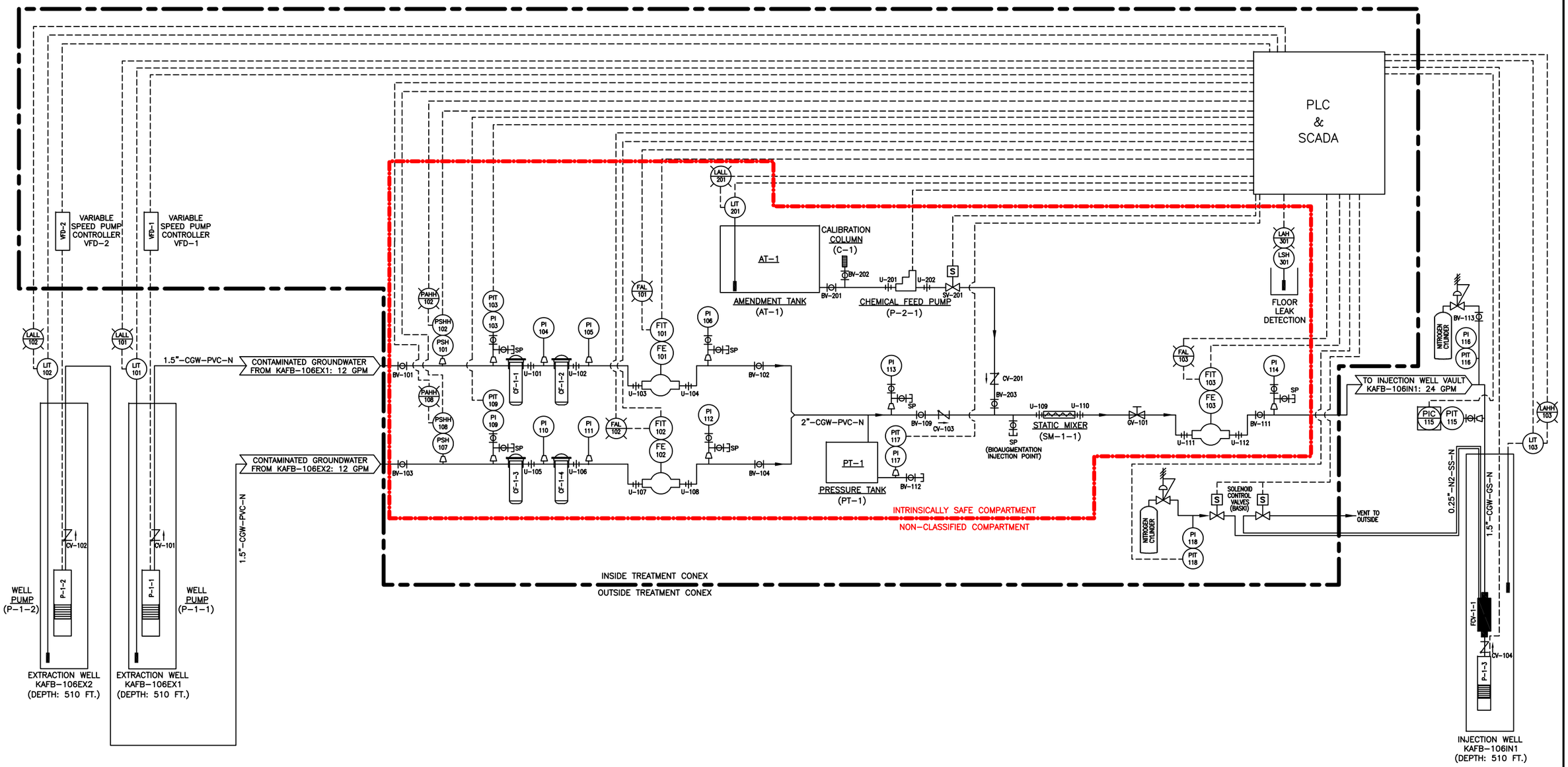

P-1-1, P-1-2 EXTRACTION WELL PUMP	VFD-1, VFD-2 PUMP CONTROLLER	FIQ-101, FIQ-102, FIQ-103 FLOW METER	PT-1 PRESSURE TANK	AT-1 AMENDMENT TANK	P-3-1 CHEMICAL FEED PUMP	PIT-111 PRESSURE TRANSMITTER	FCV-1-1 FLOW CONTROL VALVE	P-1-3 INJECTION WELL PUMP
TYPE: SUBMERSIBLE FLOW: 15GPM@575' MOTOR:FRANKLIN,5HP,460V,3PH MODEL: 25S50-26 (Teflon) MFR: GRUNDFOS	TYPE: 60HZ FREQ CONVERTER ENCLOSURE: IP55, A5 ELECTRIC: 3X440-500V MODEL: CUE (part#91136938) MFR: GRUNDFOS	TYPE: MAGNETIC FLOW SENSOR PIPE RANGE: 2"-4" MODEL: 2551 MAGMETER PART#: 3-2551-P0-42 MFR: GF SIGNET	TYPE: DIAPHRAGM TANK VOLUME: 31.8 GAL PRE-CHARGE: 12 PSI INLET: 1" NPTF MODEL: V100 MFR: GOULDS	TYPE: VERTICAL POLY TANK DIMENSIONS: 52"x66",550GAL OUTLET: 2" BULKHEAD MODEL: NTO (VT0550-52) MFR: ACE ROTO-MOLD	TYPE: ELECTRONIC METERING CAPACITY: 2.5 GPH, 150 PSI VOLTAGE: 120 VAC MODEL: E71 MFR: LMI	TYPE: INTRINSICALLY SAFE RANGE: 1-30 PSI SETPOINT: 5-10 PSI MODEL: 2088 MFR: ROSEMOUNT	TYPE: PNEUMATIC SIZE: 4" OD MODEL: INFLEX FCV MFR: BASKI INCLUDES CONTROL PANEL WITH NITROGEN REGULATOR	TYPE: SUBMERSIBLE FLOW: 3GPM@550' MOTOR: 1HP,230V,8.1A MODEL: 5SQE10-410 (Teflon) MFR: GRUNDFOS

APTIM

Aptim Federal Services
17 Princess Road
Lawrenceville, New Jersey 08648

U.S. ARMY CORPS OF ENGINEERS
OMAHA DISTRICT
OMAHA, NEBRASKA

FIGURE 5

RECIRCULATION AND AMENDMENT SYSTEM PIPING AND INSTRUMENTATION DIAGRAM

IN-SITU EDB BIOREMEDIATION PILOT TEST
KIRTLAND AFB, NEW MEXICO

OFFICE	DATE	DESIGNED BY	DRAWN BY	CHECKED BY	APPROVED BY	DRAWING NUMBER
Lawrenceville, NJ	5/9/17	G.Lavorgna	G.Lavorgna	S.Shealy	P.KostervanGroos	500433-D1

File: R:\PROJECTS\500433 - RAPID Kirtland EDB\Design\500433-D1.dwg
Plot Date/Time: Mar 27, 2019 - 1:35pm
Plotted By: Craig.Lavorgna
Xref:
Image: APTIM_Logo Standard CBI_Logo-Color-CMYK

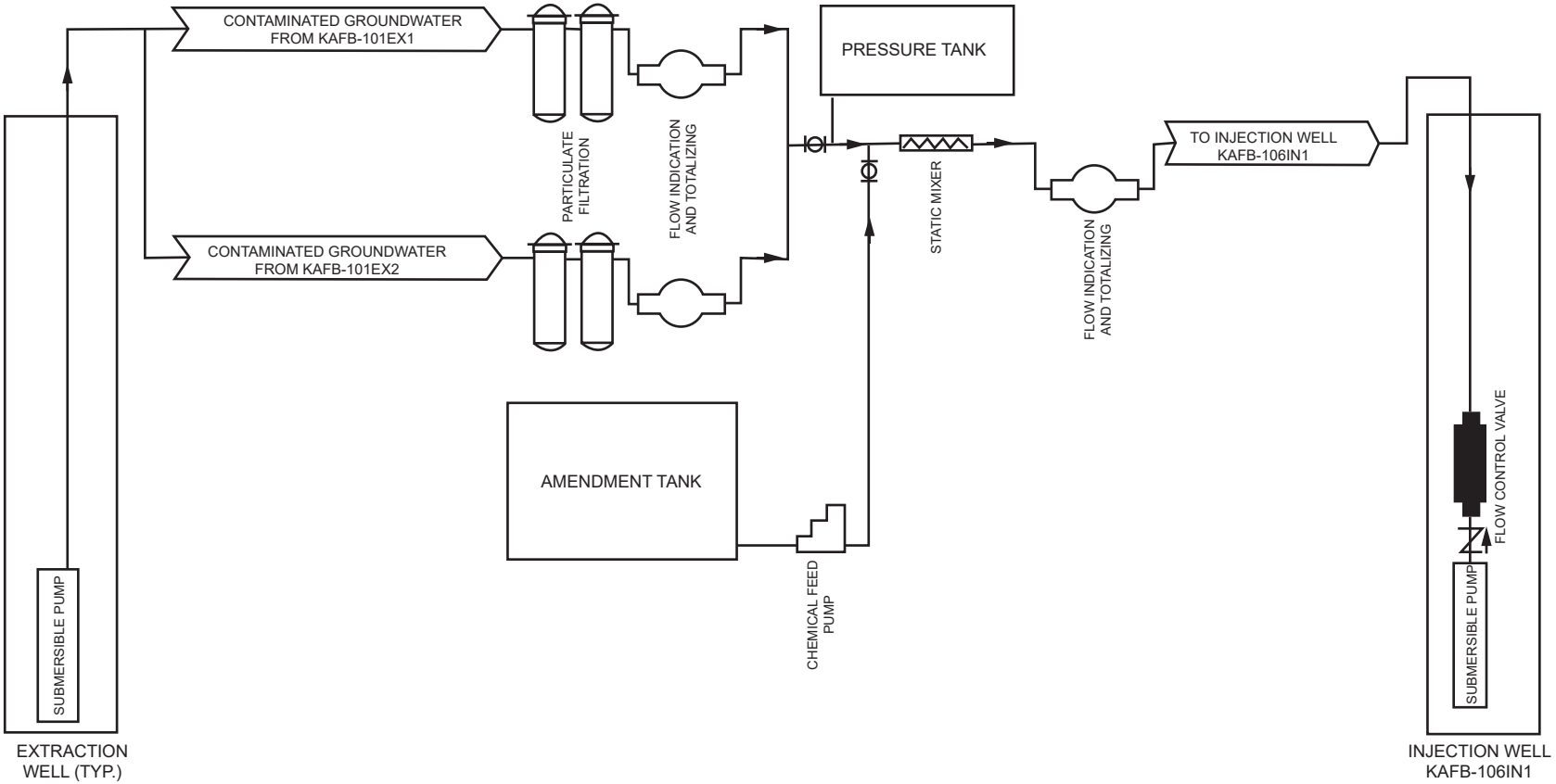

FIGURE 6 PROCESS FLOW DIAGRAM

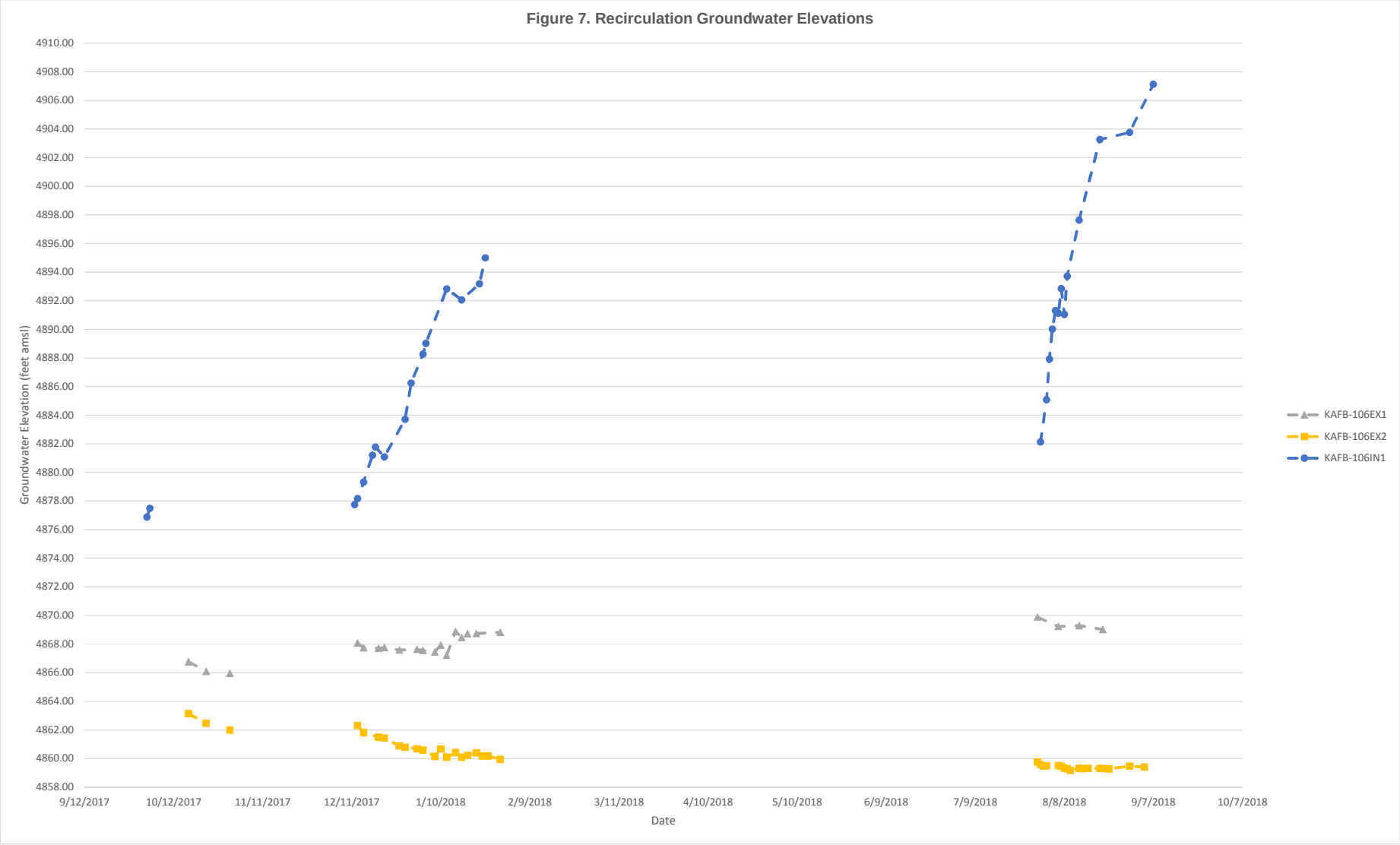
Figure 7. Recirculation Groundwater Elevations
Groundwater Elevation (feet amsl)
4910.00
4908.00
4906.00
4904.00
4902.00
4900.00
4898.00
4896.00
4894.00
4892.00
4890.00
4888.00
4886.00
4884.00
4882.00
4880.00
4878.00
4876.00
4874.00
4872.00
4870.00
4868.00
4866.00
4864.00
4862.00
4860.00
4858.00
9/12/2017
10/12/2017
11/11/2017
12/11/2017
1/10/2018
2/9/2018
3/11/2018
4/10/2018
5/10/2018
6/9/2018
7/9/2018
8/8/2018
9/7/2018
10/7/2018
Date
KAFB-106EX1
KAFB-106EX2
KAFB-106IN1

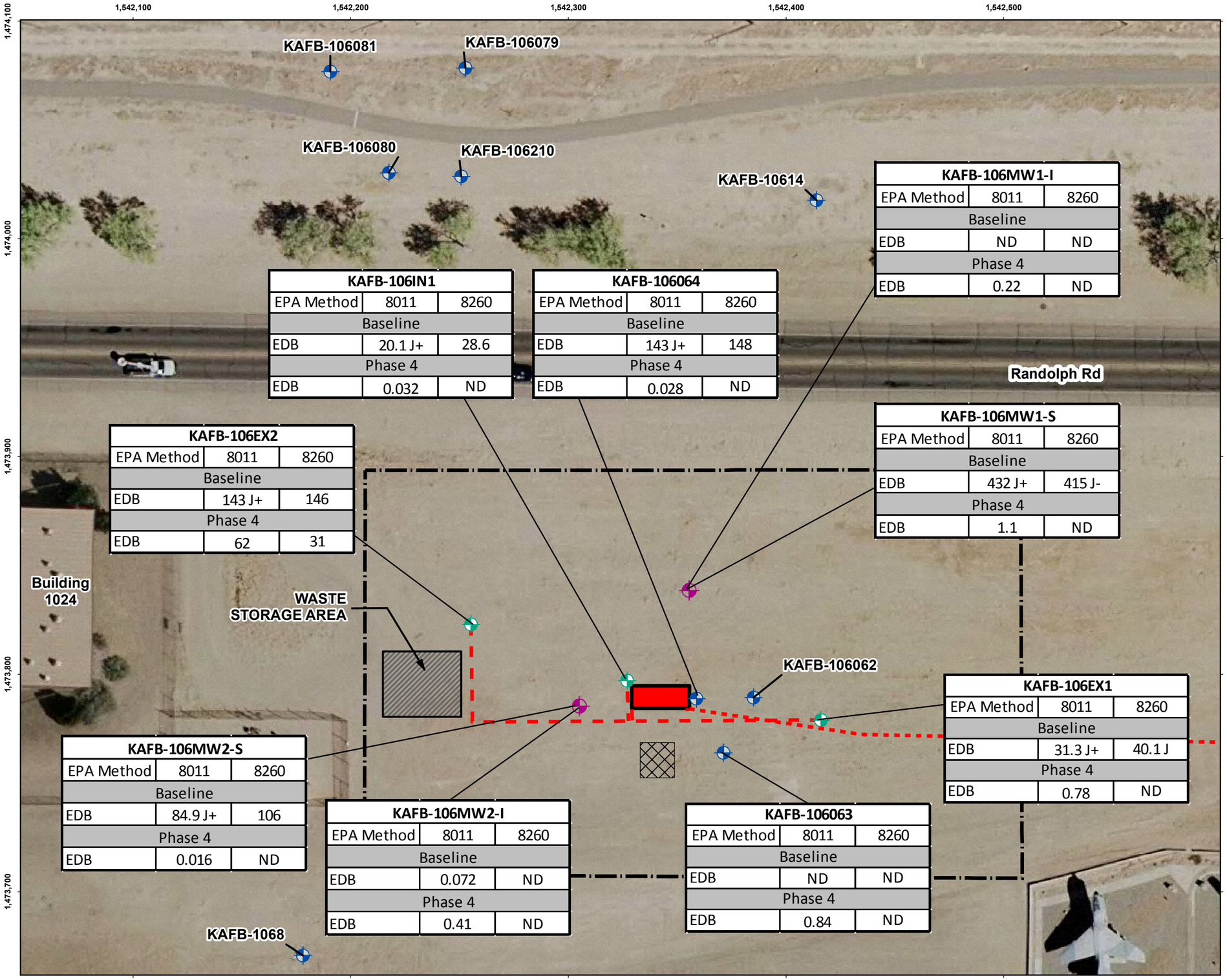

KAFB-106IN1		
EPA Method	8011	8260
Baseline		
EDB	20.1 J+	28.6
Phase 4		
EDB	0.032	ND

KAFB-106064		
EPA Method	8011	8260
Baseline		
EDB	143 J+	148
Phase 4		
EDB	0.028	ND

KAFB-106MW1-I		
EPA Method	8011	8260
Baseline		
EDB	ND	ND
Phase 4		
EDB	0.22	ND

KAFB-106EX2		
EPA Method	8011	8260
Baseline		
EDB	143 J+	146
Phase 4		
EDB	62	31

KAFB-106MW1-S		
EPA Method	8011	8260
Baseline		
EDB	432 J+	415 J-
Phase 4		
EDB	1.1	ND

KAFB-106EX1		
EPA Method	8011	8260
Baseline		
EDB	31.3 J+	40.1 J
Phase 4		
EDB	0.78	ND

KAFB-106MW2-S		
EPA Method	8011	8260
Baseline		
EDB	84.9 J+	106
Phase 4		
EDB	0.016	ND

KAFB-106MW2-I		
EPA Method	8011	8260
Baseline		
EDB	0.072	ND
Phase 4		
EDB	0.41	ND

KAFB-106063		
EPA Method	8011	8260
Baseline		
EDB	ND	ND
Phase 4		
EDB	0.84	ND

Legend

- Existing Monitoring Well
- Pilot Test Injection/Extraction Well
- Pilot Test Monitoring Well
- Construction Fence
- Pilot Test Trench Location for Water Pipe and Subsurface Electrical
- Pilot Test System Location
- Electrical Service Line
- Storage Shed

EPA = United States Environmental Protection Agency
KAFB = Kirtland Air Force Base
ND = Not Detected

Units are in micrograms per liter.

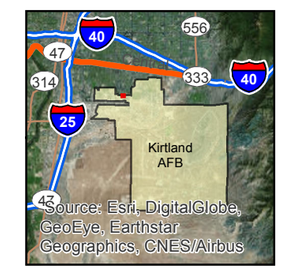

SITE LOCATION

Revision Date: 03/21/19

N

0 15 30 60
Feet
1 inch = 45 feet

Projection : NAD83 State Plane New Mexico Central FIPS3002 Feet

ETHYLENE DIBROMIDE IN SITU BIODEGREDATION PILOT TEST REPORT
KIRTLAND AIR FORCE BASE, NEW MEXICO

FIGURE 8

EDB CONCENTRATIONS FOR BASELINE AND PHASE 4 SAMPLING EVENTS

H:\Kirtland_AFB\GIS_Documents\Project_Maps_bak\EDIB_Pilot_Test_Report\ECarpioESRI Data Solutions TeamKAFB_E004_edb_conc_BL_Ph4.mxd 03/21/19

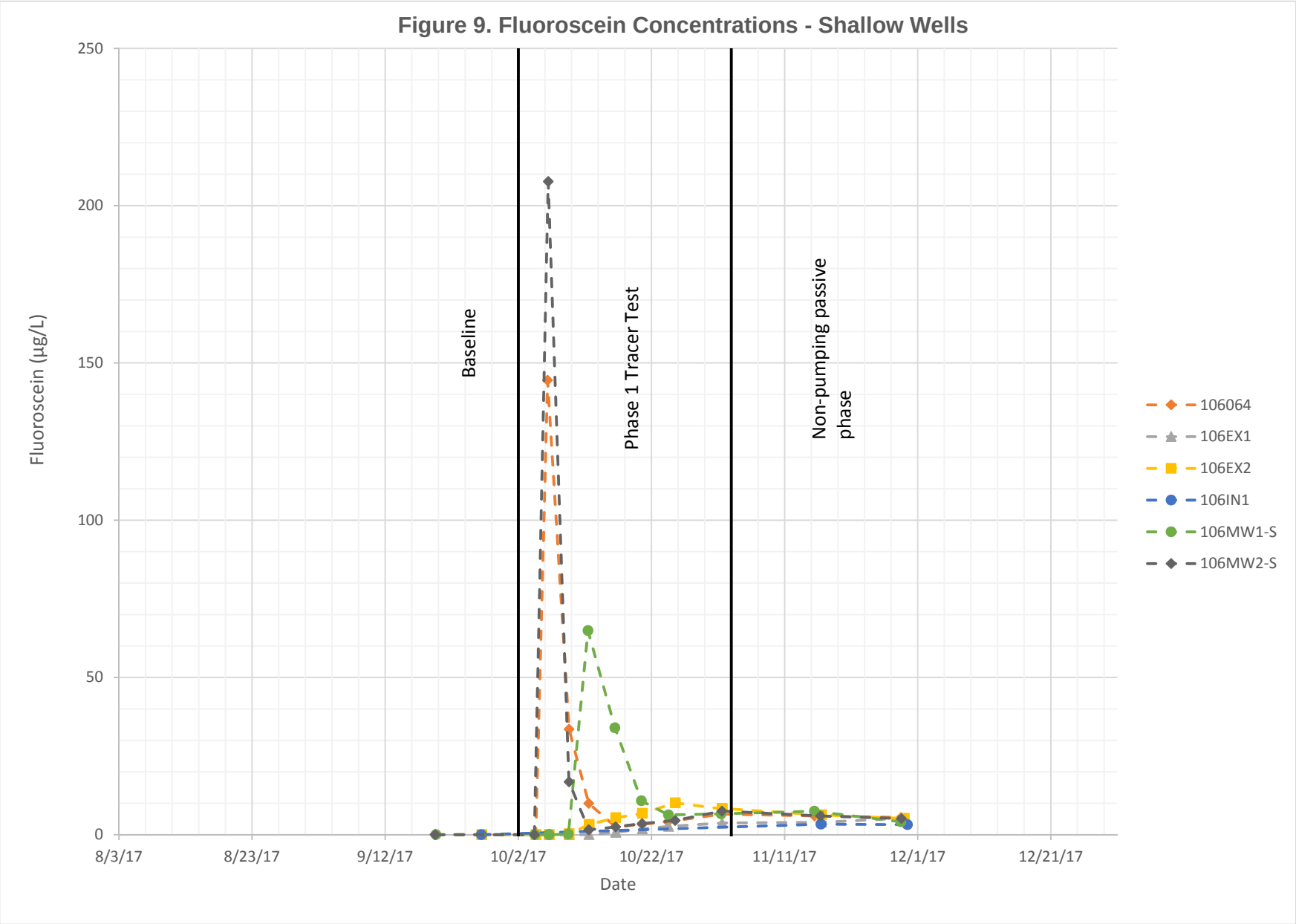
Figure 9. Fluoroscein Concentrations - Shallow Wells
Fluoroscein (µg/L)
250
200
150
100
50
0
8/3/17
8/23/17
9/12/17
10/2/17
10/22/17
11/11/17
12/1/17
12/21/17
Date
Baseline
Phase 1 Tracer Test
Non-pumping passive phase
106064
106EX1
106EX2
106IN1
106MW1-S
106MW2-S

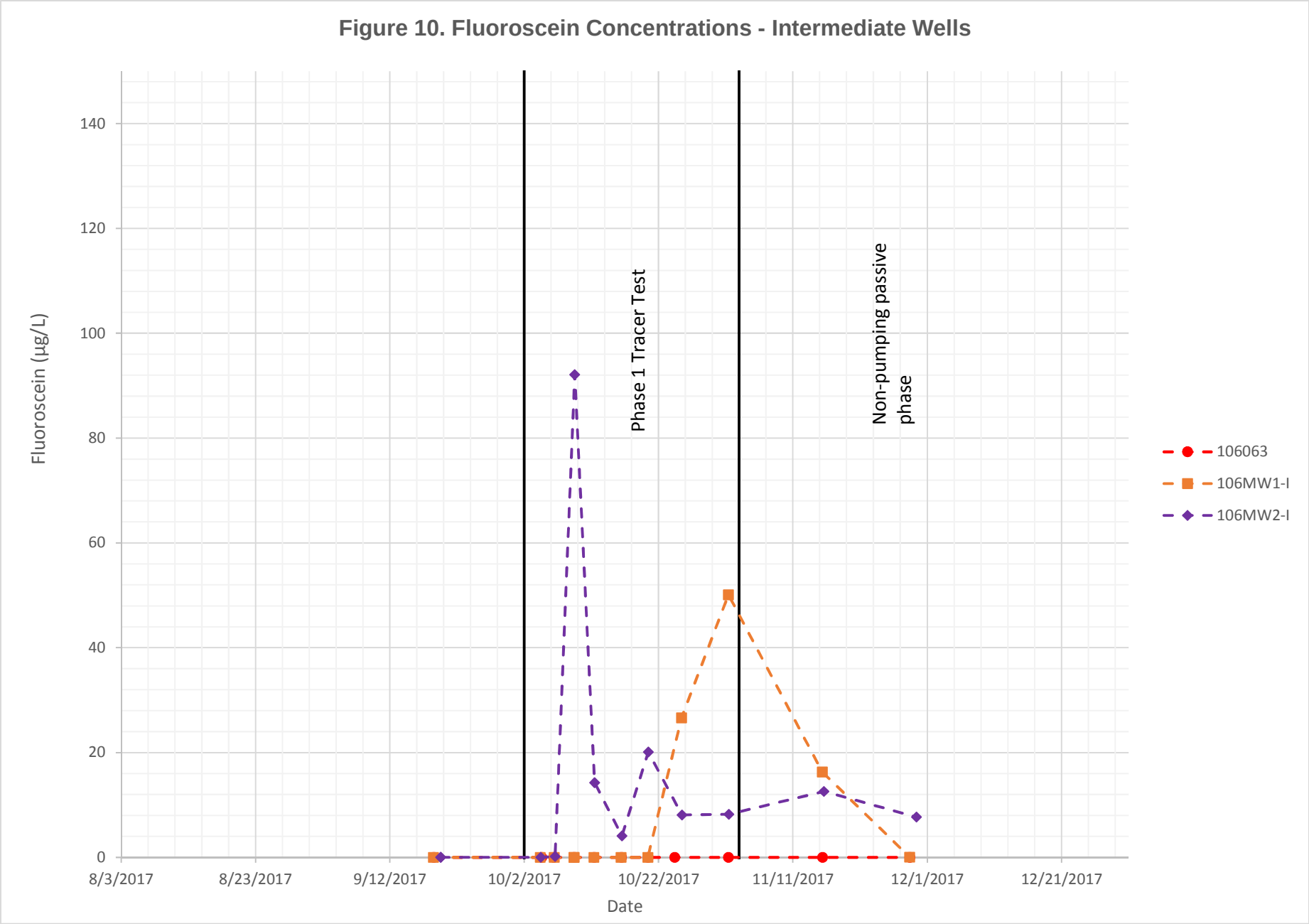
Figure 10. Fluoroscein Concentrations - Intermediate Wells
Fluoroscein (µg/L)
140
120
100
80
60
40
20
0
8/3/2017
8/23/2017
9/12/2017
10/2/2017
10/22/2017
11/11/2017
12/1/2017
12/21/2017
Date
Phase 1 Tracer Test
Non-pumping passive phase
106063
106MW1-I
106MW2-I

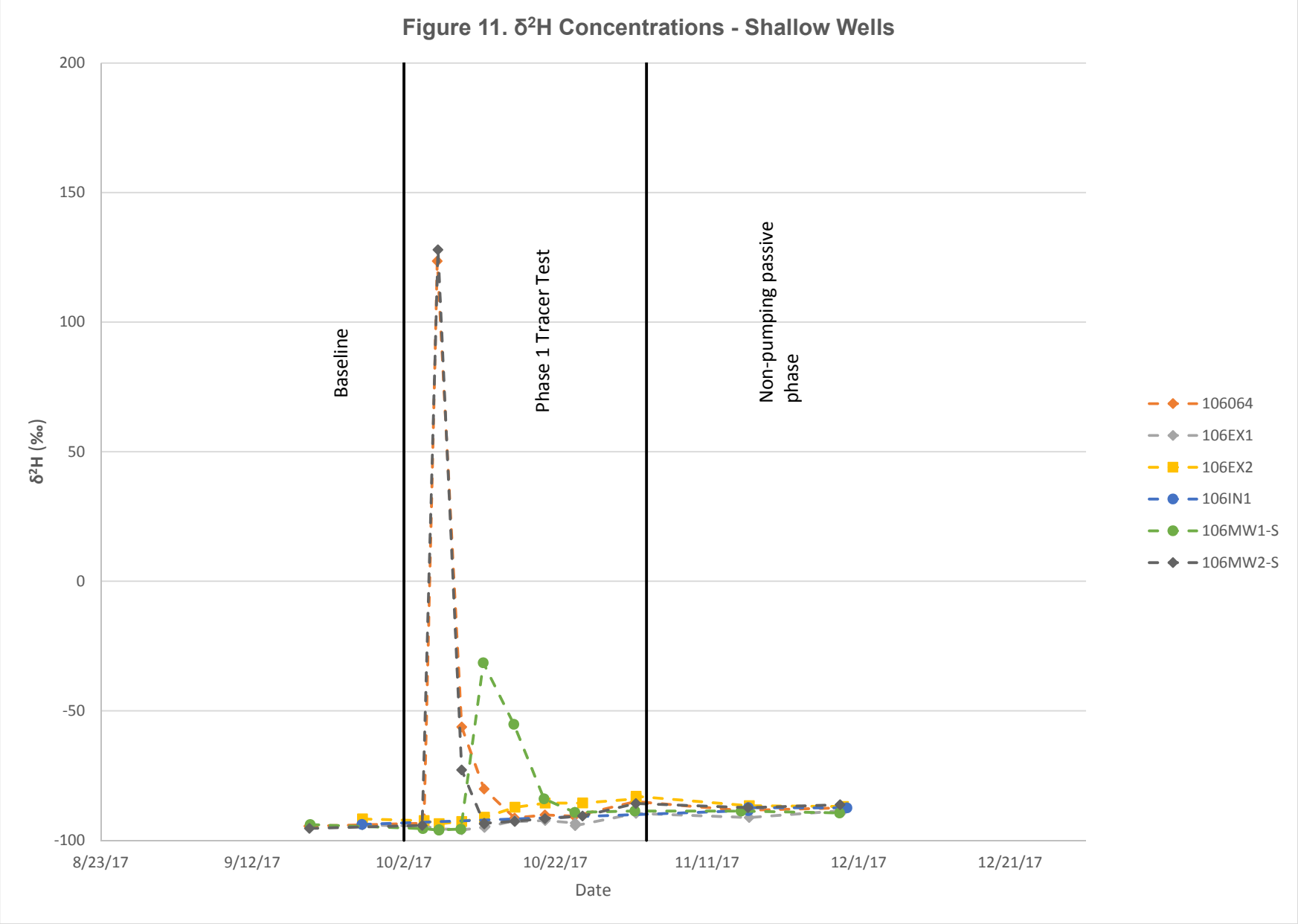
Figure 11. δ²H Concentrations - Shallow Wells
200
150
100
50
0
-50
-100
δ²H (‰)
Baseline
Phase 1 Tracer Test
Non-pumping passive phase
8/23/17
9/12/17
10/2/17
10/22/17
11/11/17
12/1/17
12/21/17
Date
106064
106EX1
106EX2
106IN1
106MW1-S
106MW2-S

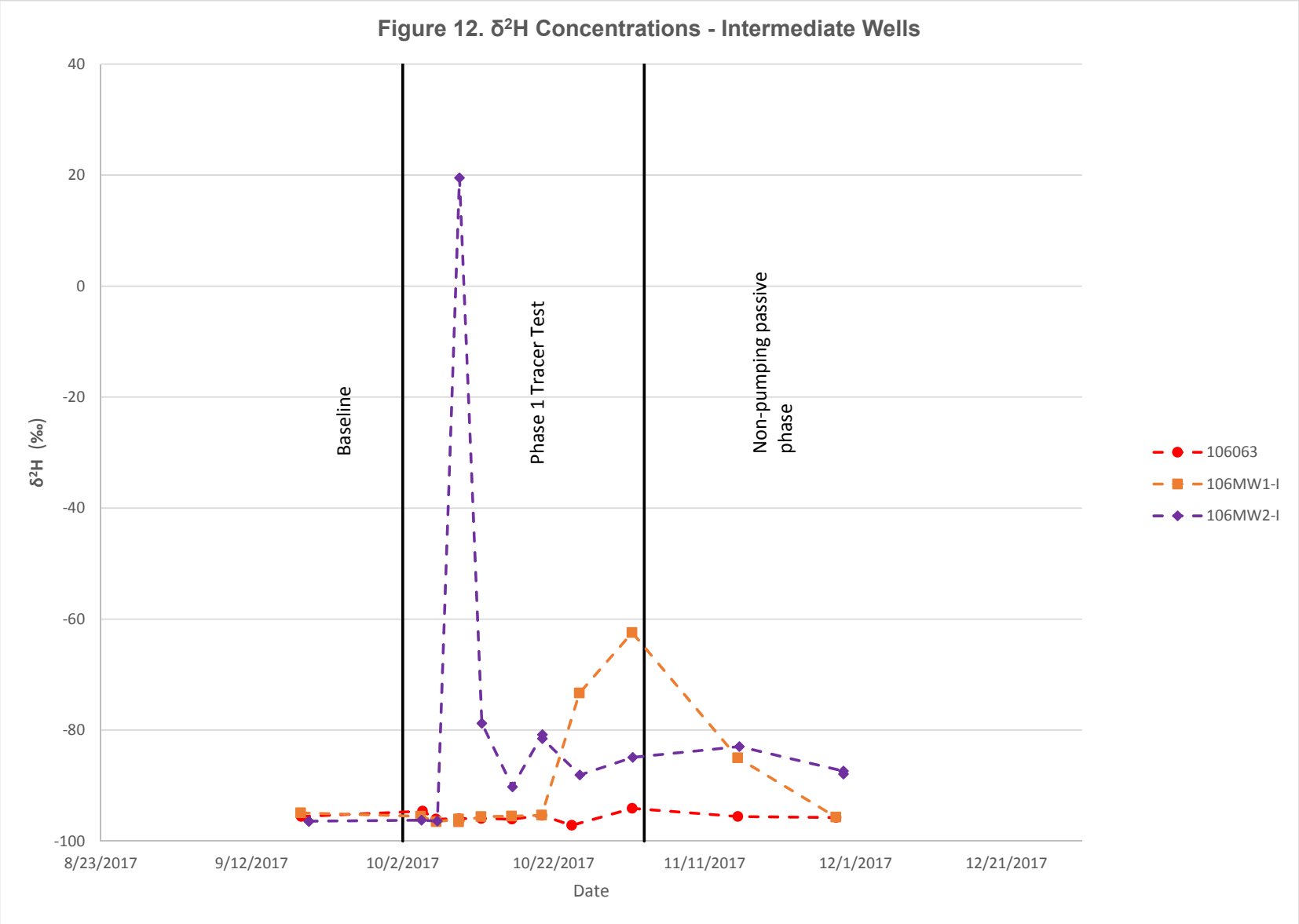
Figure 12. δ²H Concentrations - Intermediate Wells
40
20
0
-20
-40
-60
-80
-100
δ²H (‰)
Baseline
Phase 1 Tracer Test
Non-pumping passive phase
8/23/2017
9/12/2017
10/2/2017
10/22/2017
11/11/2017
12/1/2017
12/21/2017
Date
106063
106MW1-I
106MW2-I

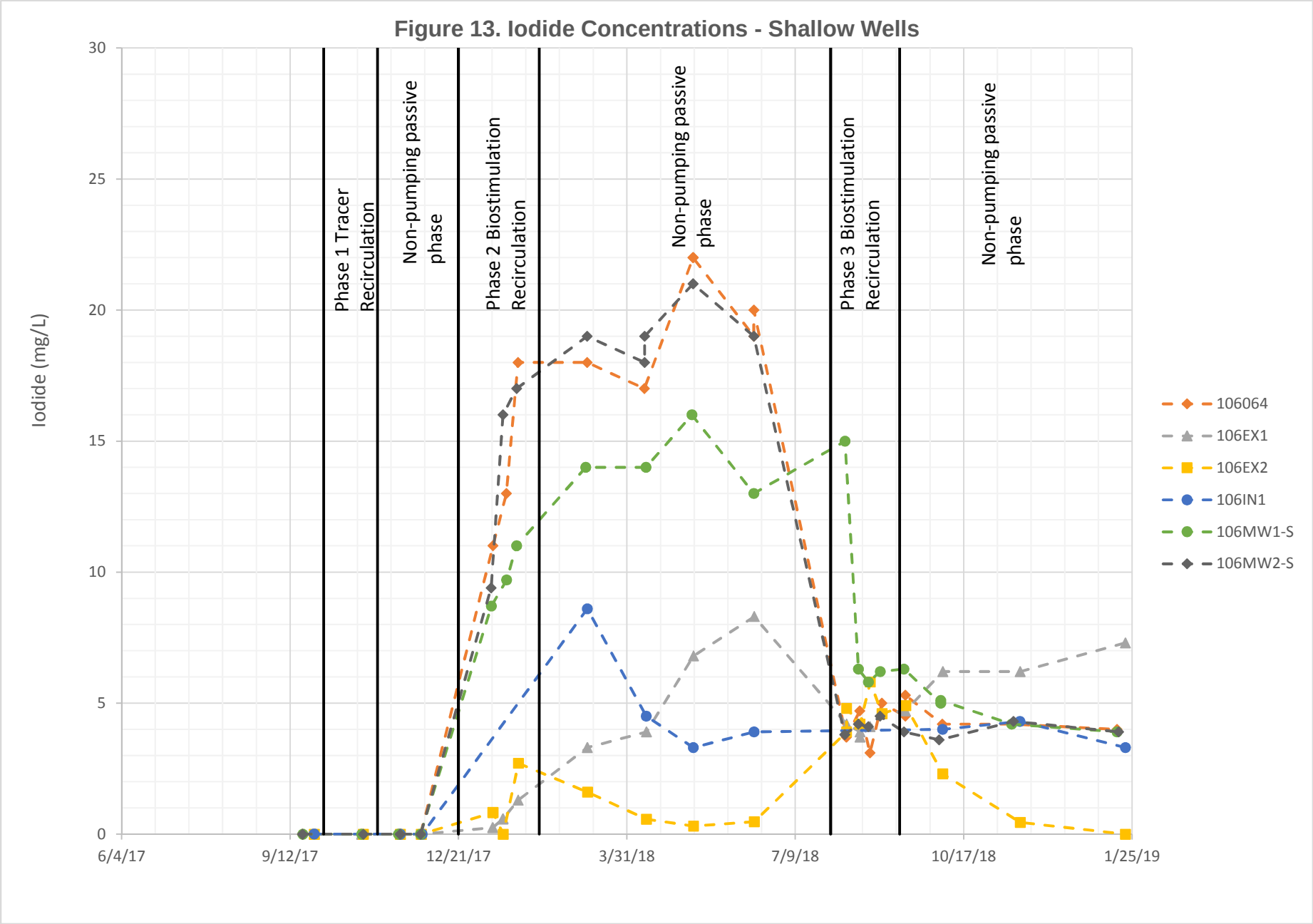
Figure 13. Iodide Concentrations - Shallow Wells
Iodide (mg/L)
30
25
20
15
10
5
0
6/4/17
9/12/17
12/21/17
3/31/18
7/9/18
10/17/18
1/25/19
Phase 1 Tracer Recirculation
Non-pumping passive phase
Phase 2 Biostimulation Recirculation
Non-pumping passive phase
Phase 3 Biostimulation Recirculation
Non-pumping passive phase
106064
106EX1
106EX2
106IN1
106MW1-S
106MW2-S

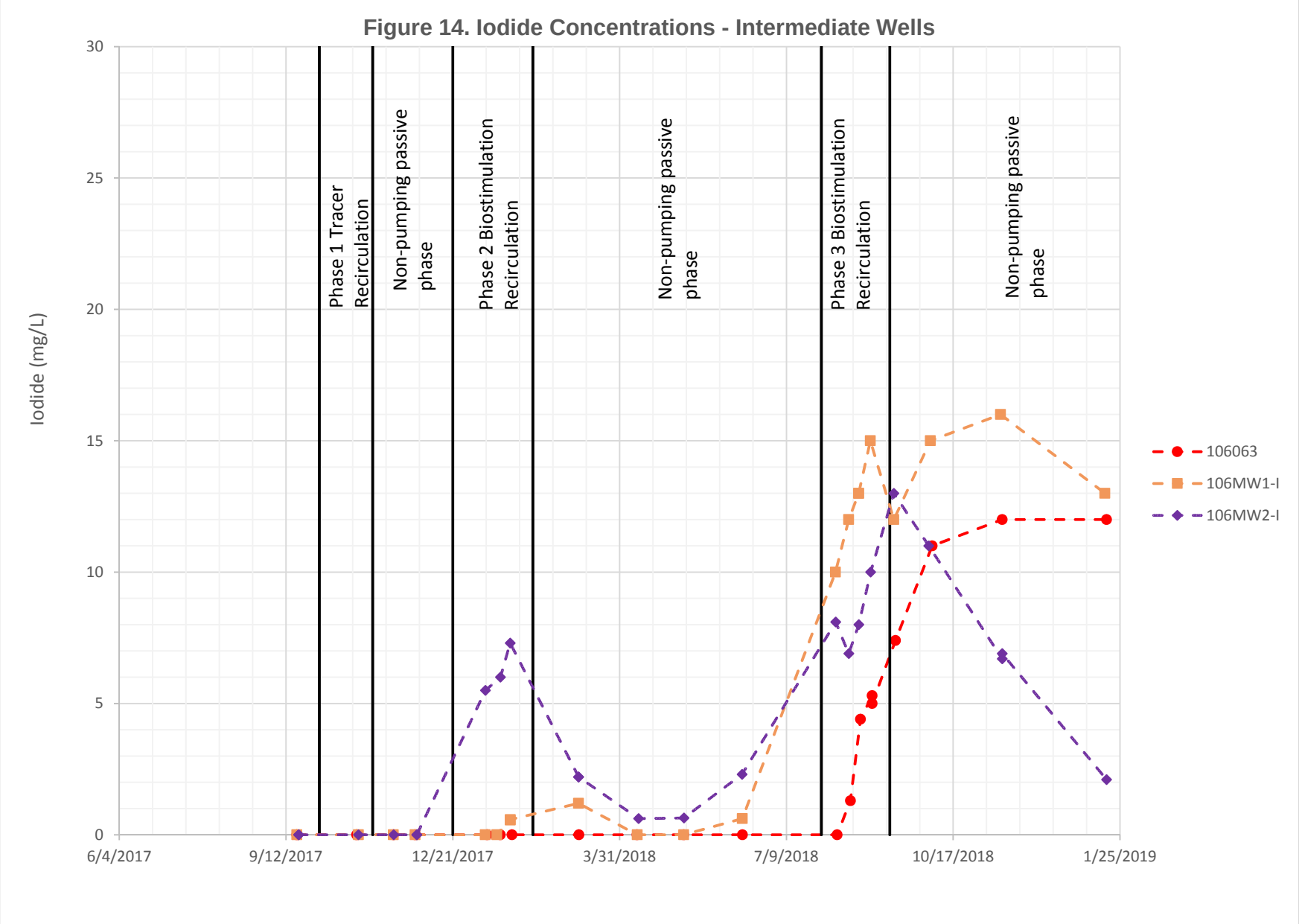
Figure 14. Iodide Concentrations - Intermediate Wells
Iodide (mg/L)
30
25
20
15
10
5
0
6/4/2017
9/12/2017
12/21/2017
3/31/2018
7/9/2018
10/17/2018
1/25/2019
Phase 1 Tracer Recirculation
Non-pumping passive phase
Phase 2 Biostimulation Recirculation
Non-pumping passive phase
Phase 3 Biostimulation Recirculation
Non-pumping passive phase
106063
106MW1-I
106MW2-I

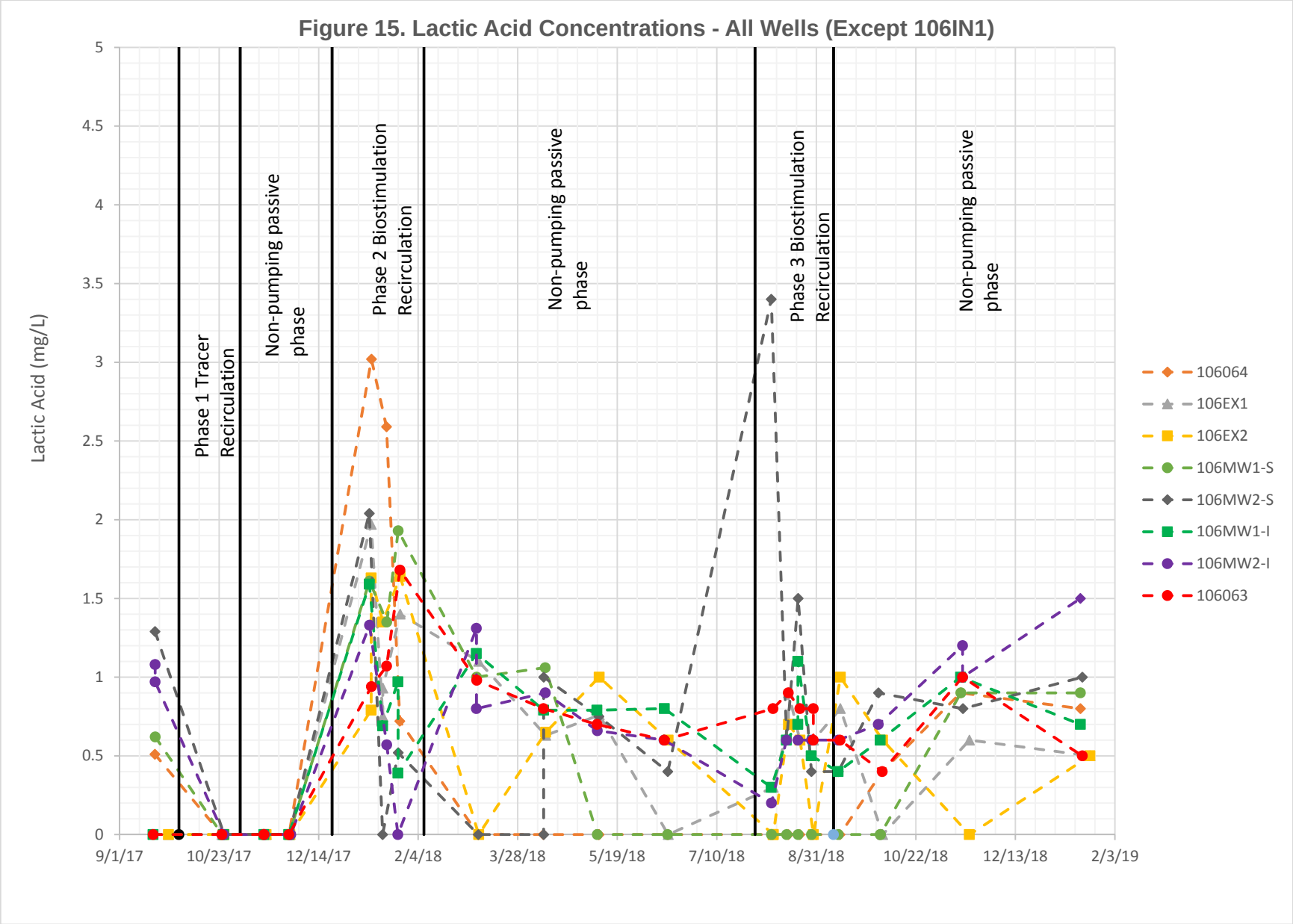
Figure 15. Lactic Acid Concentrations - All Wells (Except 106IN1)
Lactic Acid (mg/L)
5
4.5
4
3.5
3
2.5
2
1.5
1
0.5
0
9/1/17
10/23/17
12/14/17
2/4/18
3/28/18
5/19/18
7/10/18
8/31/18
10/22/18
12/13/18
2/3/19
Phase 1 Tracer Recirculation
Non-pumping passive phase
Phase 2 Biostimulation Recirculation
Non-pumping passive phase
Phase 3 Biostimulation Recirculation
Non-pumping passive phase
106064
106EX1
106EX2
106MW1-S
106MW2-S
106MW1-I
106MW2-I
106063

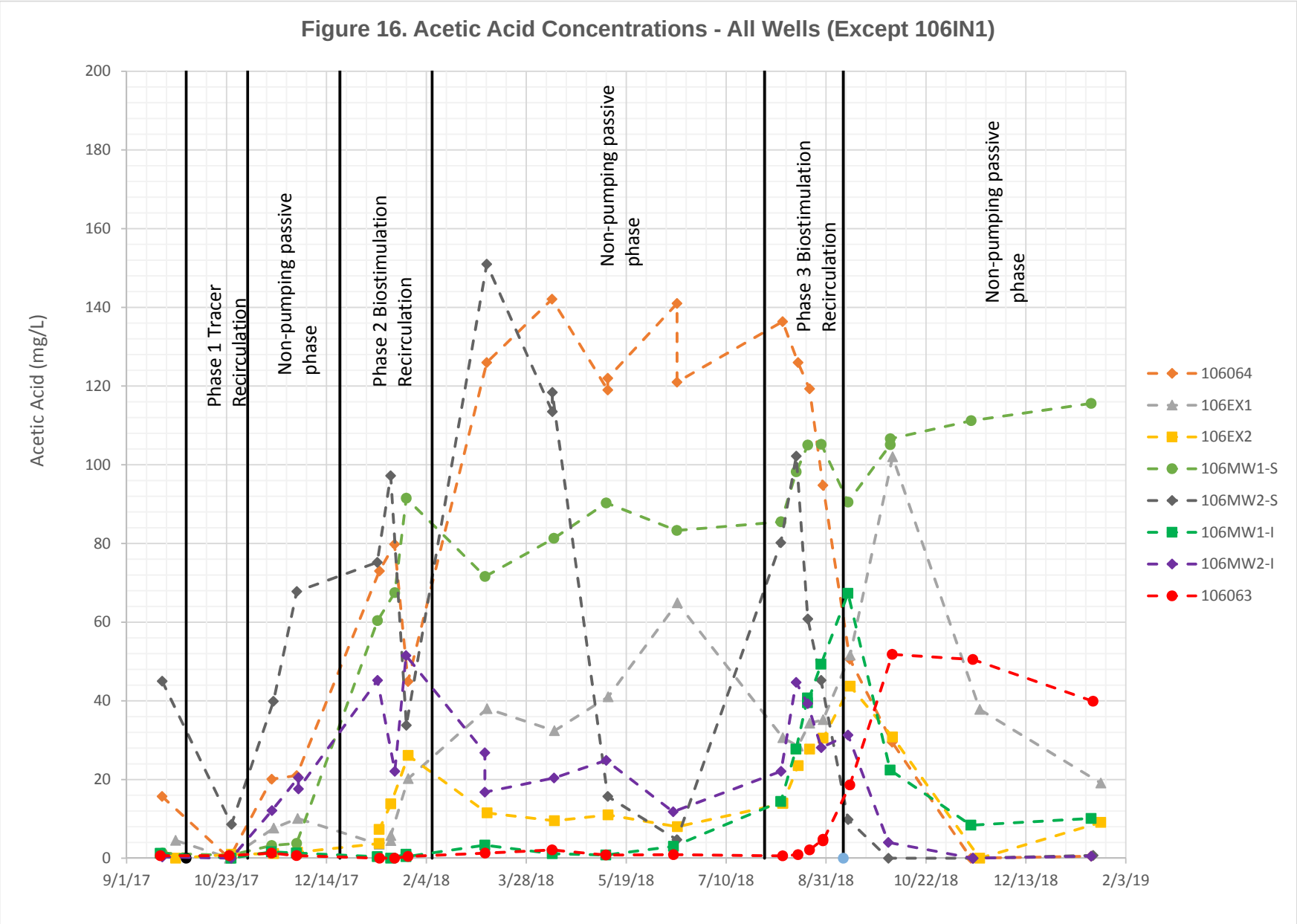
Figure 16. Acetic Acid Concentrations - All Wells (Except 106IN1)
Acetic Acid (mg/L)
200
180
160
140
120
100
80
60
40
20
0
9/1/17
10/23/17
12/14/17
2/4/18
3/28/18
5/19/18
7/10/18
8/31/18
10/22/18
12/13/18
2/3/19
Phase 1 Tracer Recirculation
Non-pumping passive phase
Phase 2 Biostimulation Recirculation
Non-pumping passive phase
Phase 3 Biostimulation Recirculation
Non-pumping passive phase
106064
106EX1
106EX2
106MW1-S
106MW2-S
106MW1-I
106MW2-I
106063

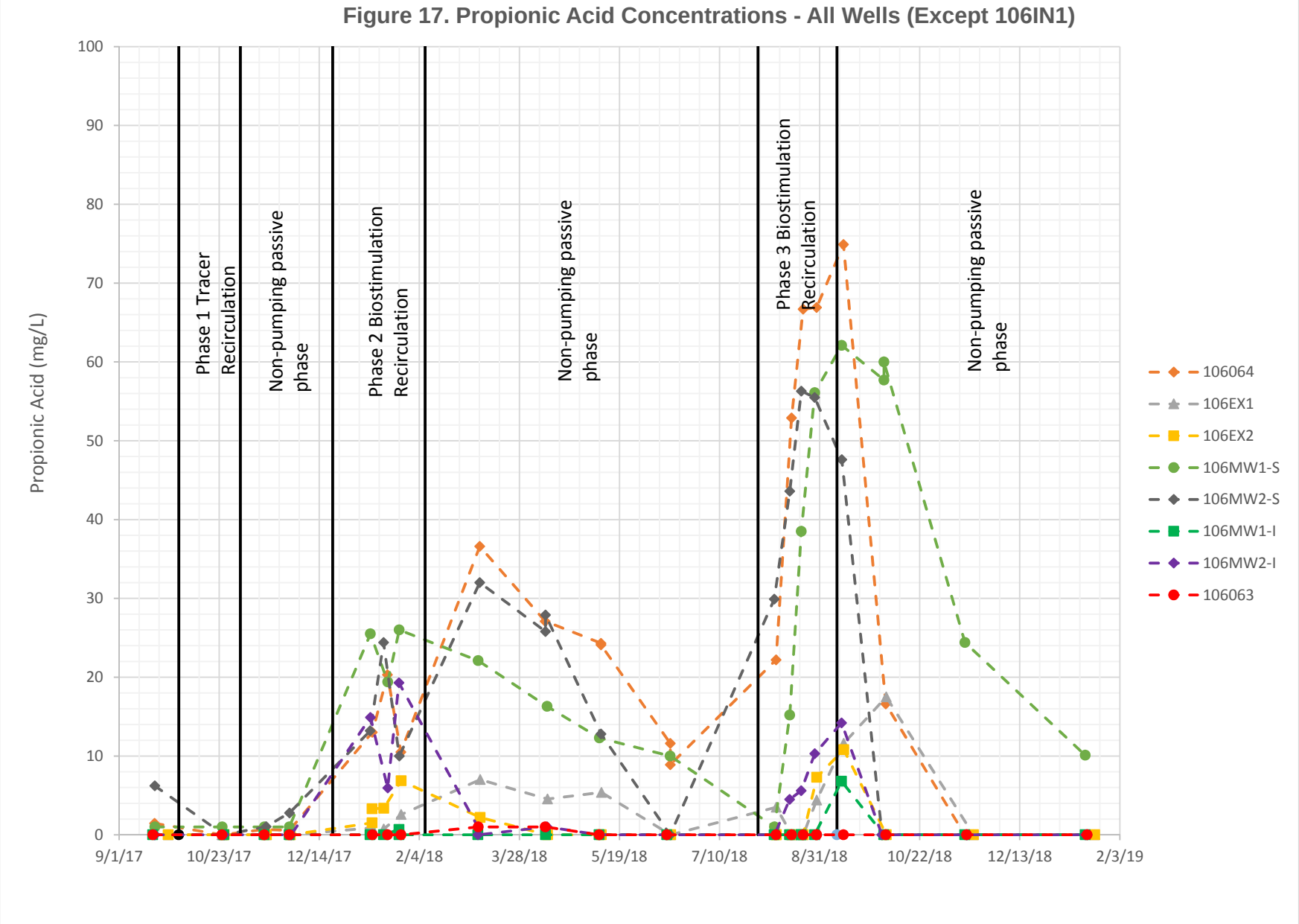
Figure 17. Propionic Acid Concentrations - All Wells (Except 106IN1)
Propionic Acid (mg/L)
100
90
80
70
60
50
40
30
20
10
0
9/1/17
10/23/17
12/14/17
2/4/18
3/28/18
5/19/18
7/10/18
8/31/18
10/22/18
12/13/18
2/3/19
Phase 1 Tracer Recirculation
Non-pumping passive phase
Phase 2 Biostimulation Recirculation
Non-pumping passive phase
Phase 3 Biostimulation Recirculation
Non-pumping passive phase
106064
106EX1
106EX2
106MW1-S
106MW2-S
106MW1-I
106MW2-I
106063

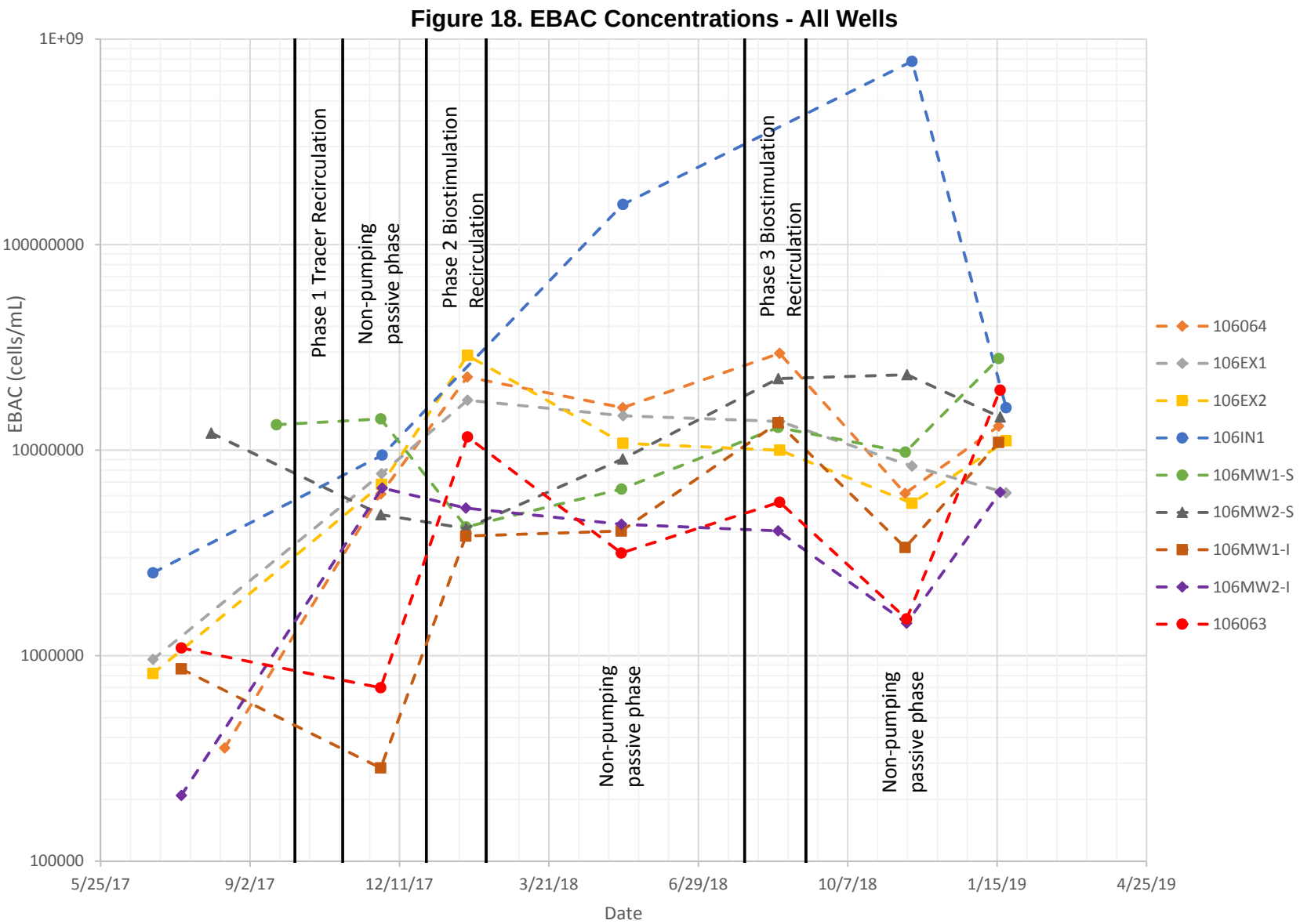
Figure 18. EBAC Concentrations - All Wells
1E+09
100000000
10000000
1000000
100000
EBAC (cells/mL)
5/25/17
9/2/17
12/11/17
3/21/18
6/29/18
10/7/18
1/15/19
4/25/19
Date
Phase 1 Tracer Recirculation
Non-pumping passive phase
Phase 2 Biostimulation Recirculation
Non-pumping passive phase
Phase 3 Biostimulation Recirculation
Non-pumping passive phase
106064
106EX1
106EX2
106IN1
106MW1-S
106MW2-S
106MW1-I
106MW2-I
106063

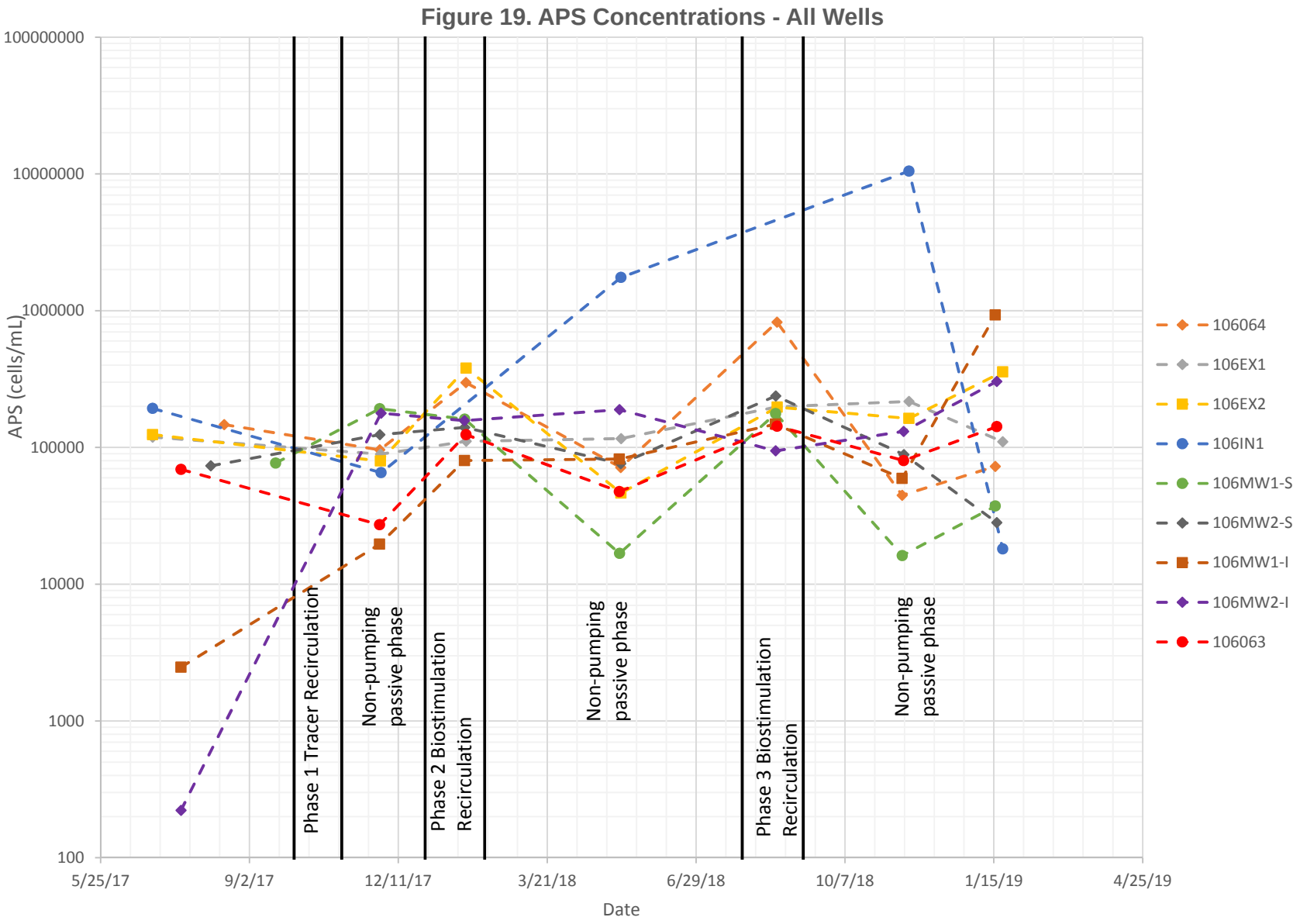
Figure 19. APS Concentrations - All Wells
100000000
10000000
1000000
100000
10000
1000
100
APS (cells/mL)
5/25/17
9/2/17
12/11/17
3/21/18
6/29/18
10/7/18
1/15/19
4/25/19
Date
Phase 1 Tracer Recirculation
Non-pumping passive phase
Phase 2 Biostimulation Recirculation
Non-pumping passive phase
Phase 3 Biostimulation Recirculation
Non-pumping passive phase
106064
106EX1
106EX2
106IN1
106MW1-S
106MW2-S
106MW1-I
106MW2-I
106063

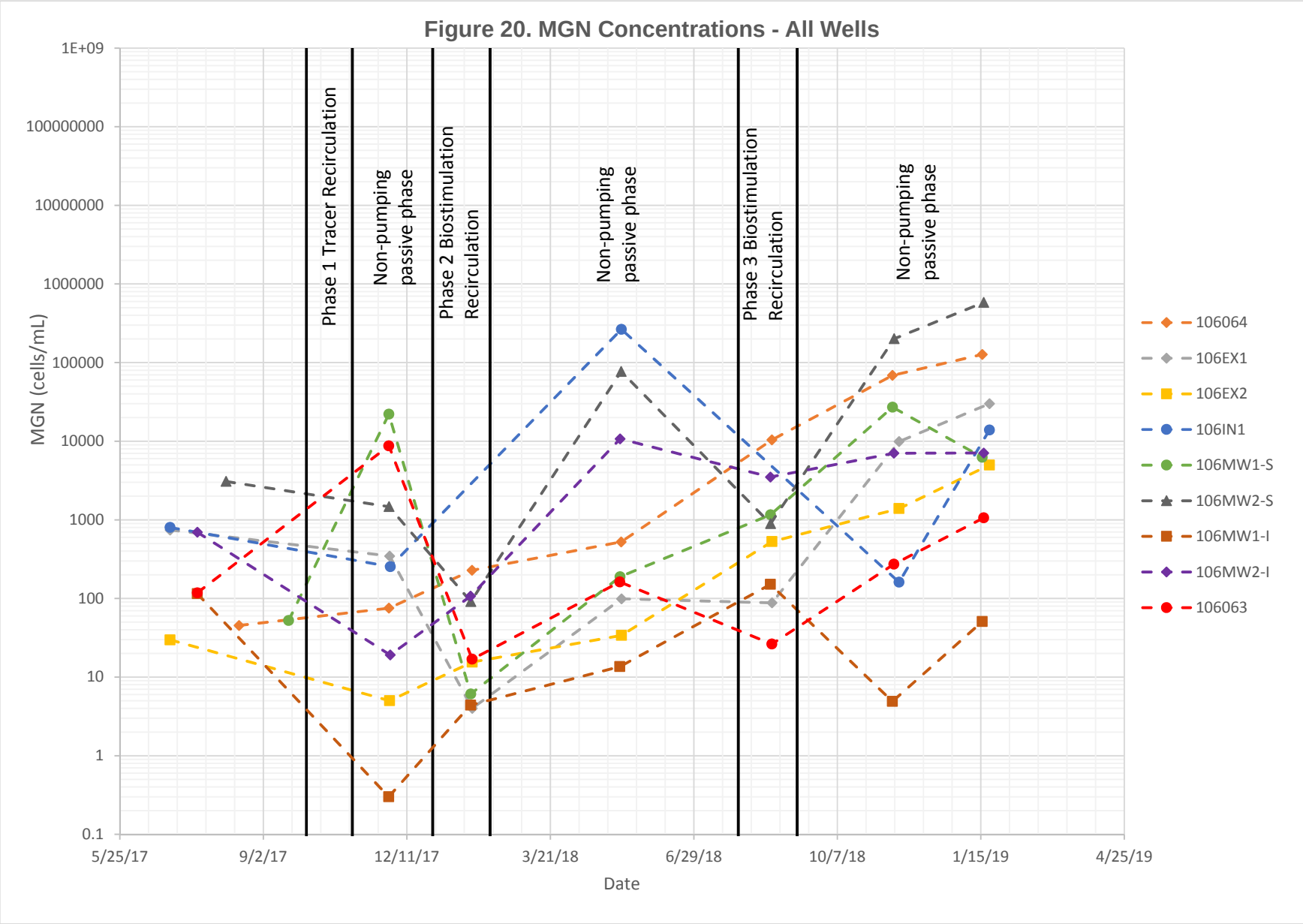
Figure 20. MGN Concentrations - All Wells
MGN (cells/mL)
1E+09
100000000
10000000
1000000
100000
10000
1000
100
10
1
0.1
5/25/17
9/2/17
12/11/17
3/21/18
6/29/18
10/7/18
1/15/19
4/25/19
Date
Phase 1 Tracer Recirculation
Non-pumping passive phase
Phase 2 Biostimulation Recirculation
Non-pumping passive phase
Phase 3 Biostimulation Recirculation
Non-pumping passive phase
106064
106EX1
106EX2
106IN1
106MW1-S
106MW2-S
106MW1-I
106MW2-I
106063

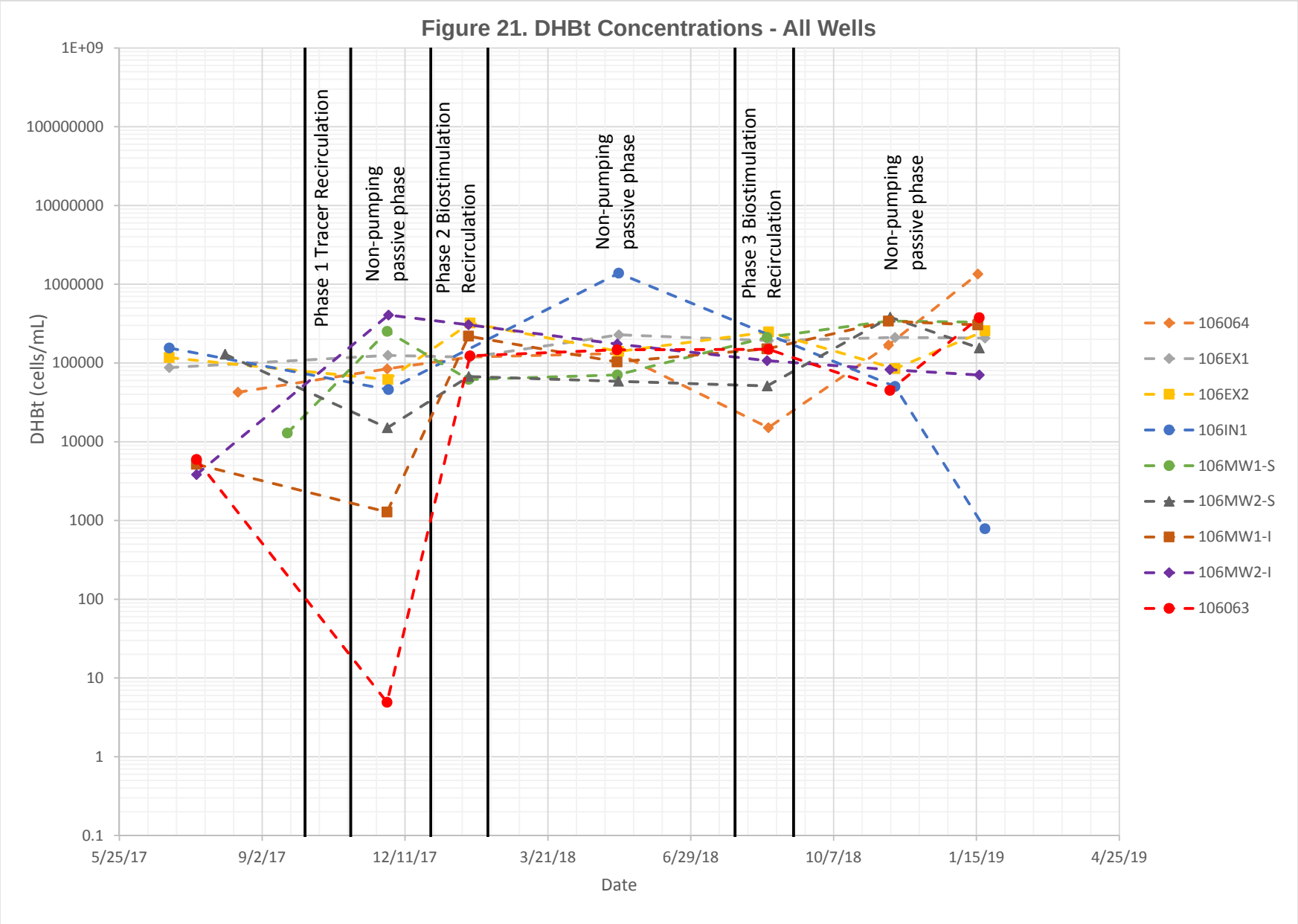
Figure 21. DHBt Concentrations - All Wells
DHBt (cells/mL)
1E+09
100000000
10000000
1000000
100000
10000
1000
100
10
1
0.1
5/25/17
9/2/17
12/11/17
3/21/18
6/29/18
10/7/18
1/15/19
4/25/19
Date
Phase 1 Tracer Recirculation
Non-pumping passive phase
Phase 2 Biostimulation Recirculation
Non-pumping passive phase
Phase 3 Biostimulation Recirculation
Non-pumping passive phase
106064
106EX1
106EX2
106IN1
106MW1-S
106MW2-S
106MW1-I
106MW2-I
106063

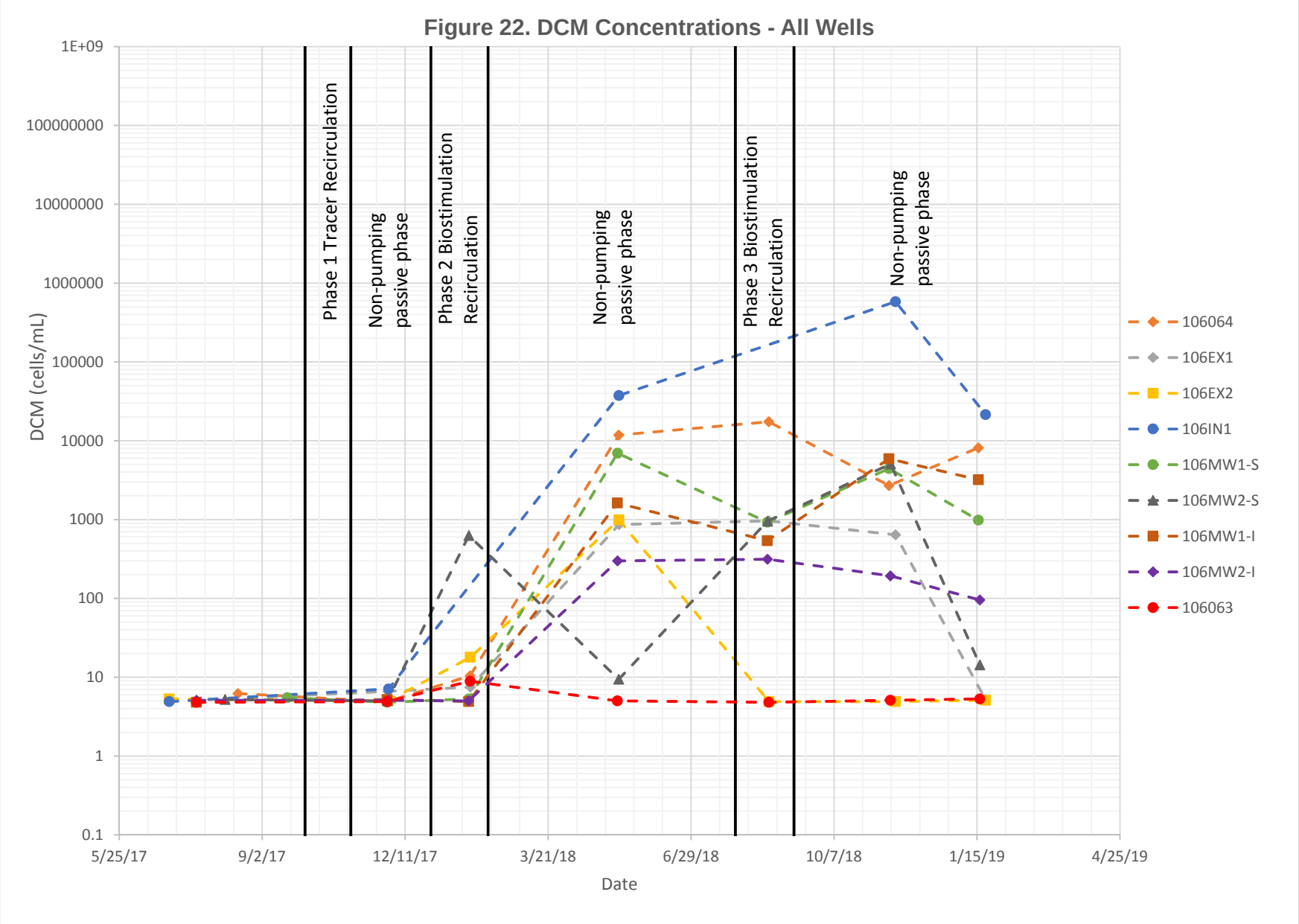
Figure 22. DCM Concentrations - All Wells
DCM (cells/mL)
1E+09
100000000
10000000
1000000
100000
10000
1000
100
10
1
0.1
5/25/17
9/2/17
12/11/17
3/21/18
6/29/18
10/7/18
1/15/19
4/25/19
Date
Phase 1 Tracer Recirculation
Non-pumping passive phase
Phase 2 Biostimulation Recirculation
Non-pumping passive phase
Phase 3 Biostimulation Recirculation
Non-pumping passive phase
106064
106EX1
106EX2
106IN1
106MW1-S
106MW2-S
106MW1-I
106MW2-I
106063

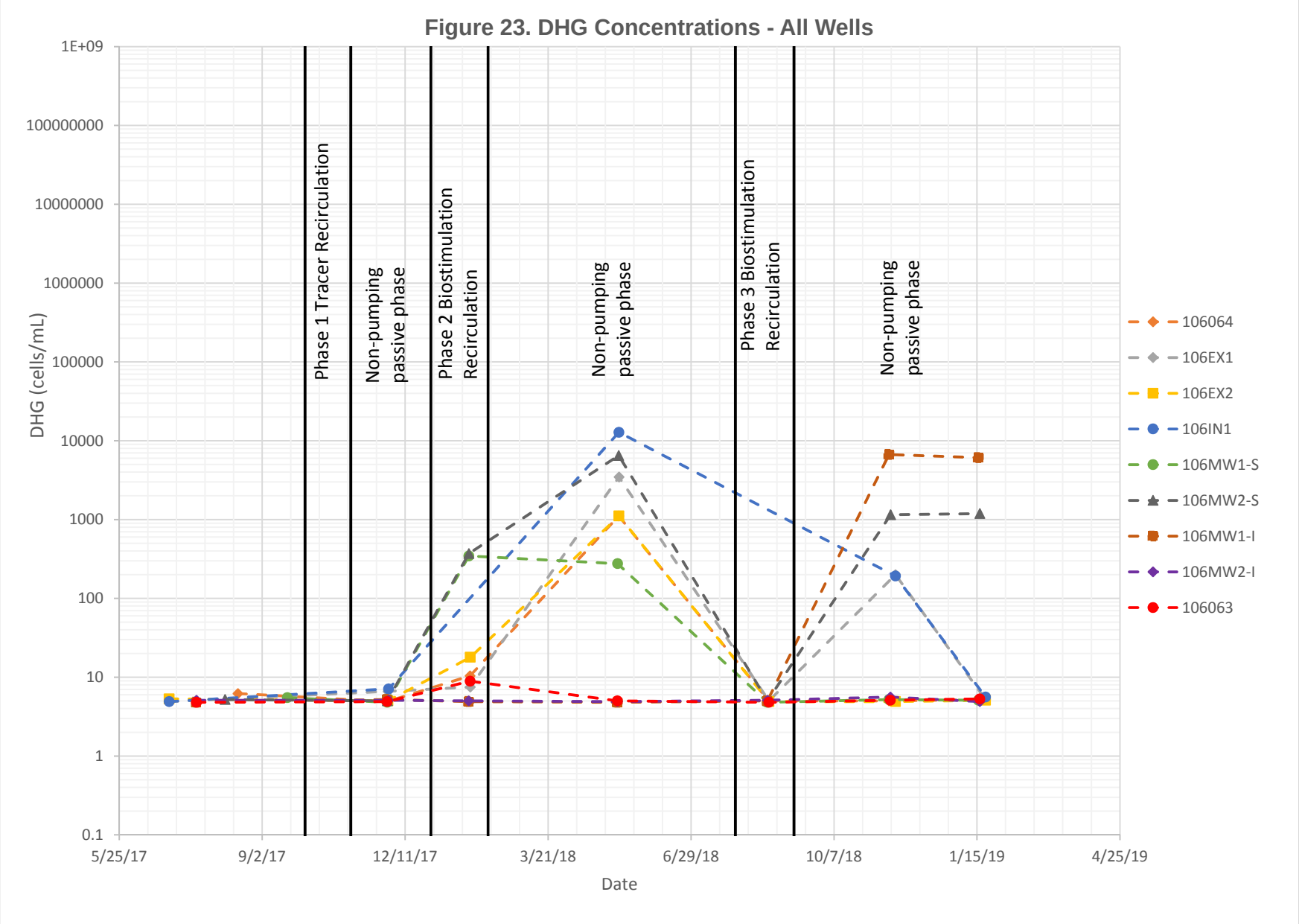
Figure 23. DHG Concentrations - All Wells
DHG (cells/mL)
1E+09
100000000
10000000
1000000
100000
10000
1000
100
10
1
0.1
5/25/17
9/2/17
12/11/17
3/21/18
6/29/18
10/7/18
1/15/19
4/25/19
Date
Phase 1 Tracer Recirculation
Non-pumping passive phase
Phase 2 Biostimulation Recirculation
Non-pumping passive phase
Phase 3 Biostimulation Recirculation
Non-pumping passive phase
106064
106EX1
106EX2
106IN1
106MW1-S
106MW2-S
106MW1-I
106MW2-I
106063

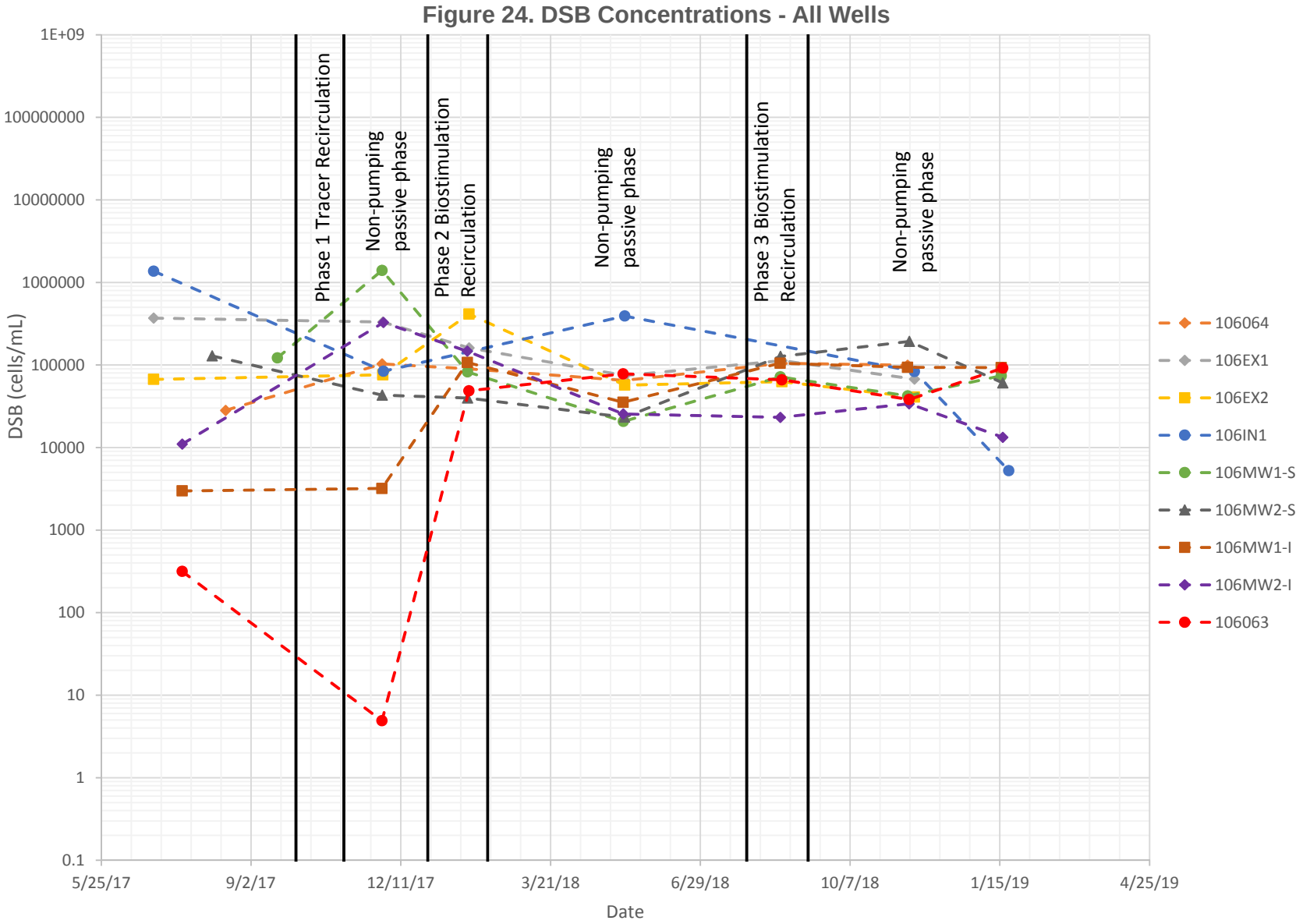
Figure 24. DSB Concentrations - All Wells
DSB (cells/mL)
1E+09
100000000
10000000
1000000
100000
10000
1000
100
10
1
0.1
5/25/17
9/2/17
12/11/17
3/21/18
6/29/18
10/7/18
1/15/19
4/25/19
Date
Phase 1 Tracer Recirculation
Non-pumping passive phase
Phase 2 Biostimulation Recirculation
Non-pumping passive phase
Phase 3 Biostimulation Recirculation
Non-pumping passive phase
106064
106EX1
106EX2
106IN1
106MW1-S
106MW2-S
106MW1-I
106MW2-I
106063

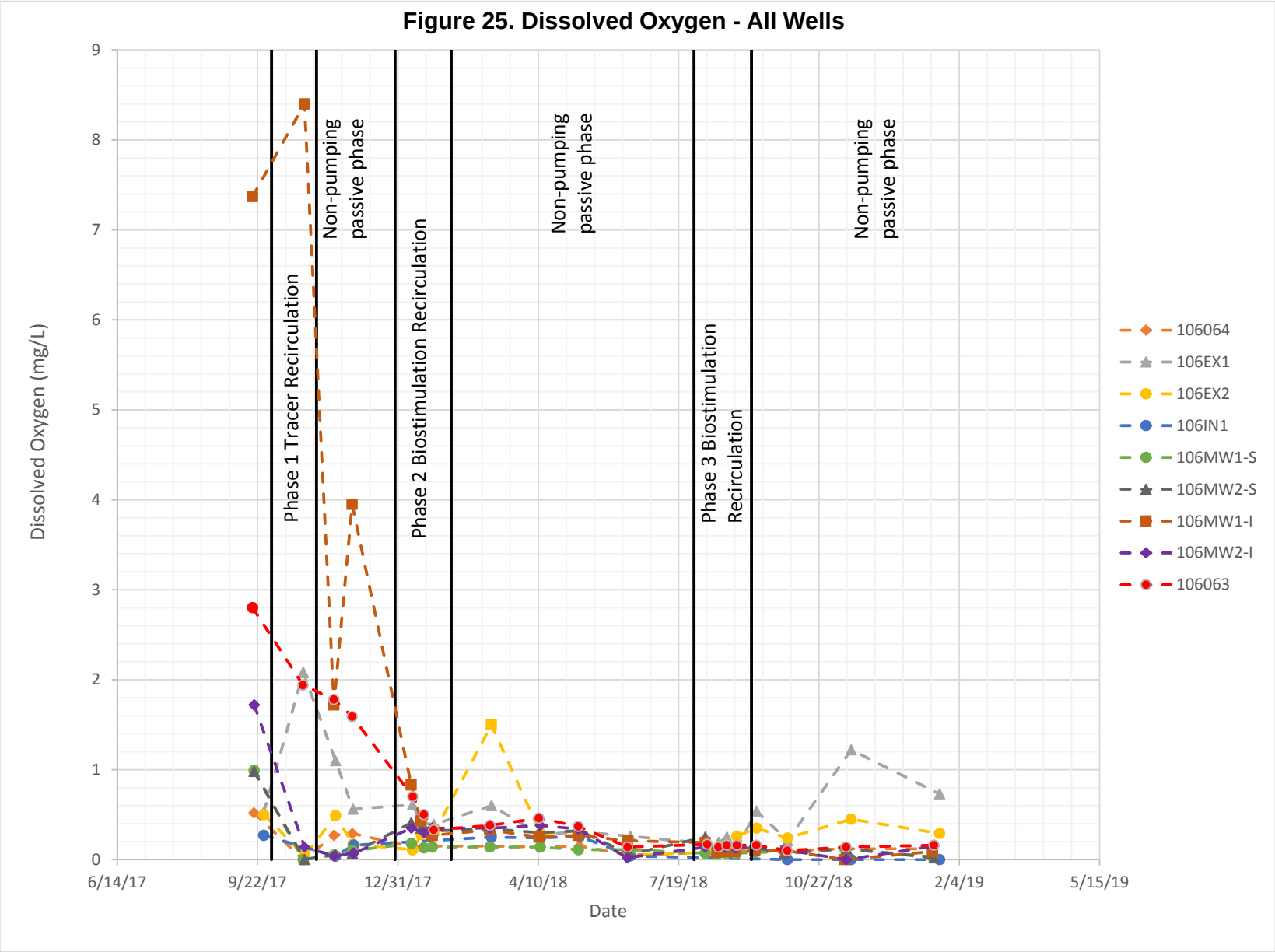
Figure 25. Dissolved Oxygen - All Wells
Dissolved Oxygen (mg/L)
9
8
7
6
5
4
3
2
1
0
6/14/17
9/22/17
12/31/17
4/10/18
7/19/18
10/27/18
2/4/19
5/15/19
Date
Phase 1 Tracer Recirculation
Non-pumping passive phase
Phase 2 Biostimulation Recirculation
Non-pumping passive phase
Phase 3 Biostimulation Recirculation
Non-pumping passive phase
106064
106EX1
106EX2
106IN1
106MW1-S
106MW2-S
106MW1-I
106MW2-I
106063

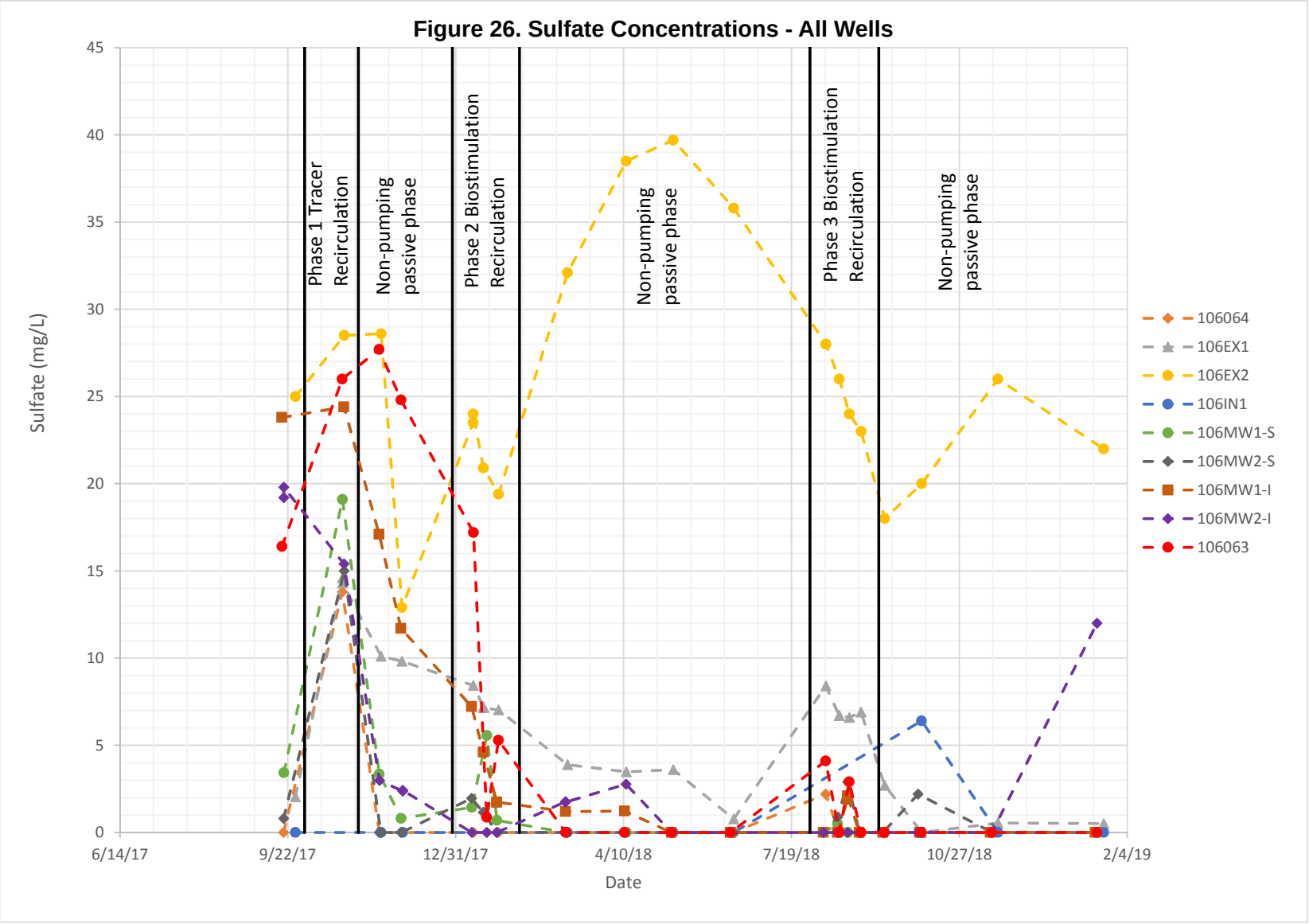
Figure 26. Sulfate Concentrations - All Wells
Sulfate (mg/L)
45
40
35
30
25
20
15
10
5
0
6/14/17
9/22/17
12/31/17
4/10/18
7/19/18
10/27/18
2/4/19
Date
Phase 1 Tracer Recirculation
Non-pumping passive phase
Phase 2 Biostimulation Recirculation
Non-pumping passive phase
Phase 3 Biostimulation Recirculation
Non-pumping passive phase
106064
106EX1
106EX2
106IN1
106MW1-S
106MW2-S
106MW1-I
106MW2-I
106063

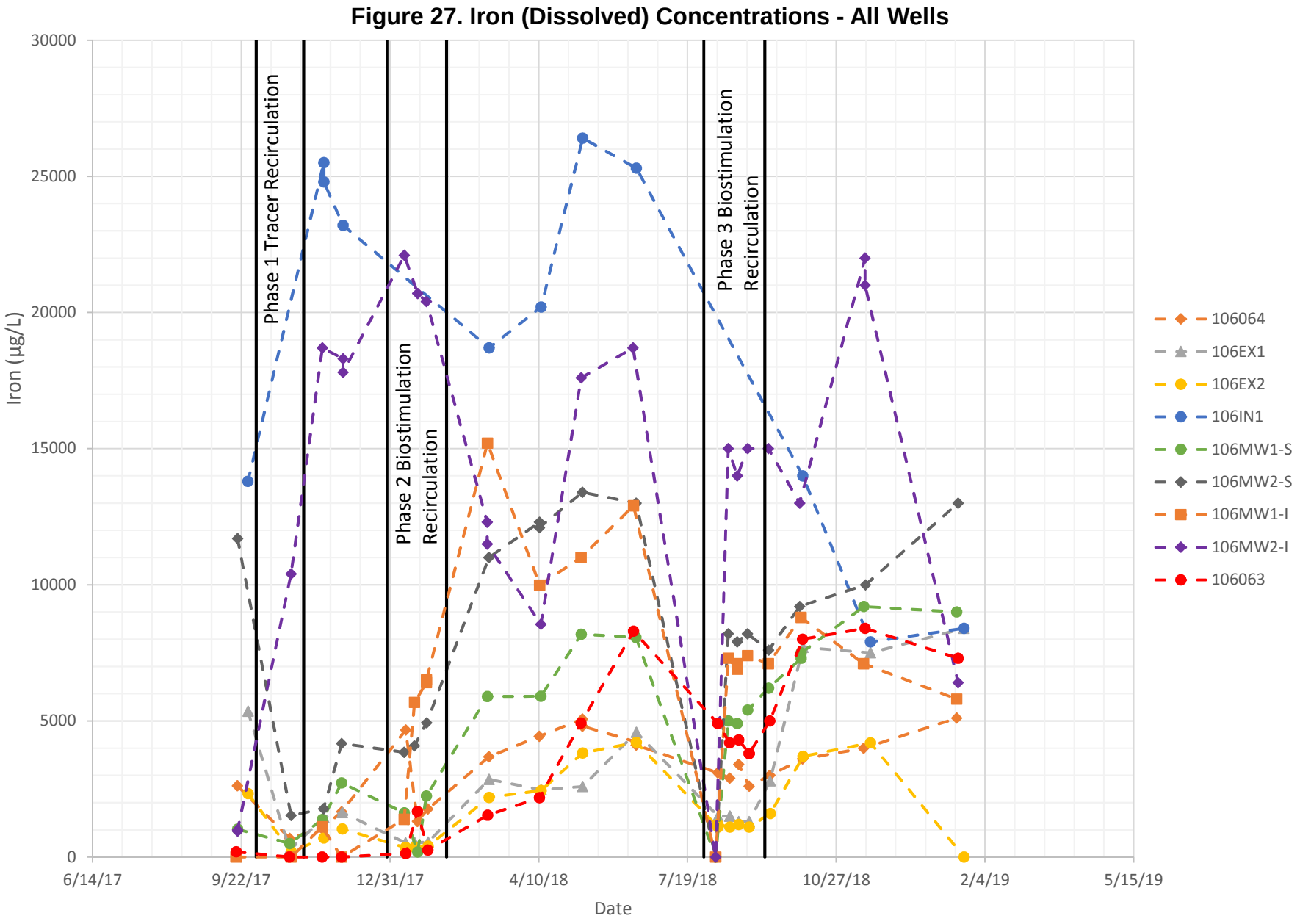
Figure 27. Iron (Dissolved) Concentrations - All Wells
Iron (µg/L)
30000
25000
20000
15000
10000
5000
0
6/14/17
9/22/17
12/31/17
4/10/18
7/19/18
10/27/18
2/4/19
5/15/19
Date
Phase 1 Tracer Recirculation
Phase 2 Biostimulation
Recirculation
Phase 3 Biostimulation
Recirculation
106064
106EX1
106EX2
106IN1
106MW1-S
106MW2-S
106MW1-I
106MW2-I
106063

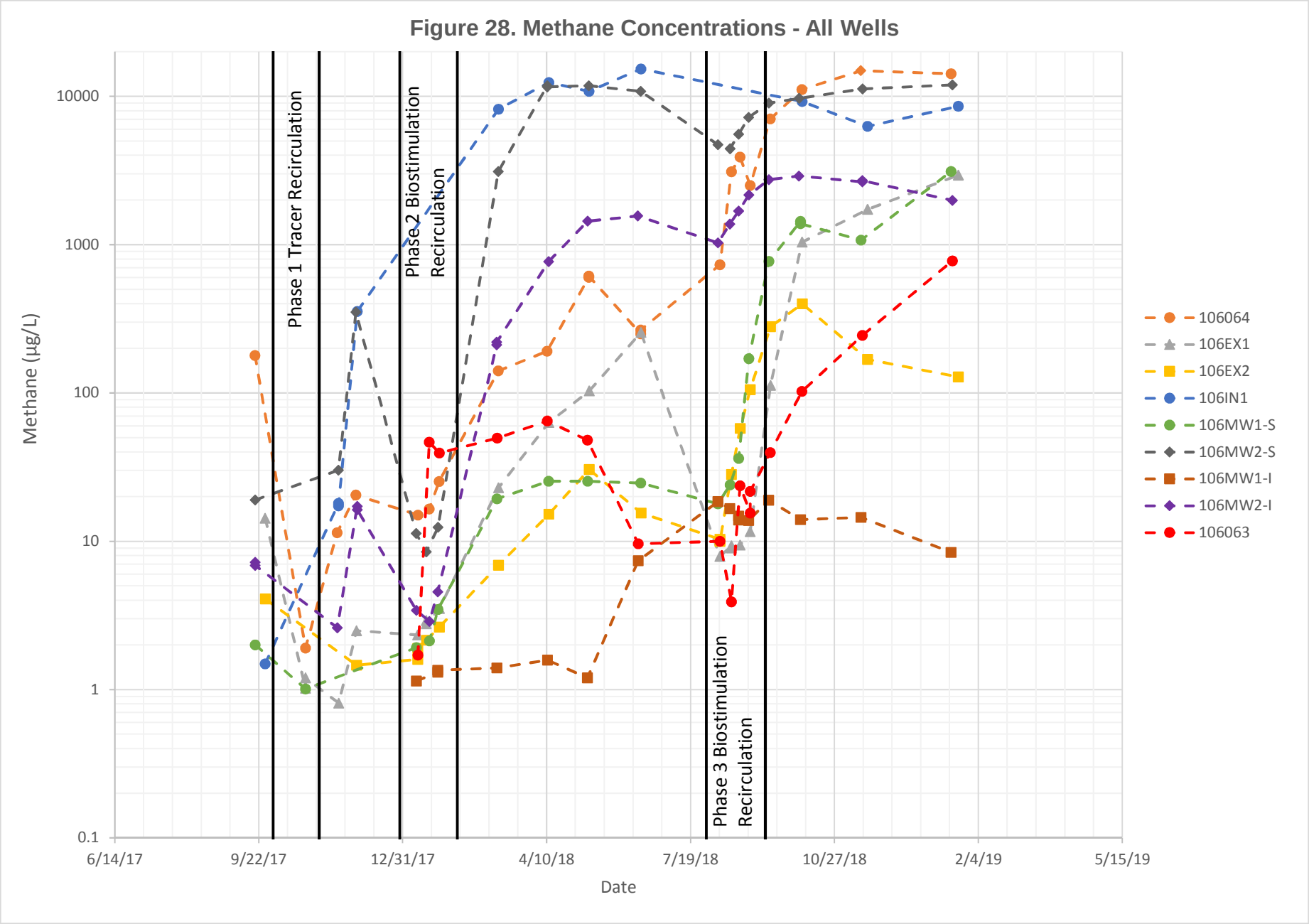
Figure 28. Methane Concentrations - All Wells
Methane (µg/L)
10000
1000
100
10
1
0.1
6/14/17
9/22/17
12/31/17
4/10/18
7/19/18
10/27/18
2/4/19
5/15/19
Date
Phase 1 Tracer Recirculation
Phase 2 Biostimulation Recirculation
Phase 3 Biostimulation Recirculation
106064
106EX1
106EX2
106IN1
106MW1-S
106MW2-S
106MW1-I
106MW2-I
106063

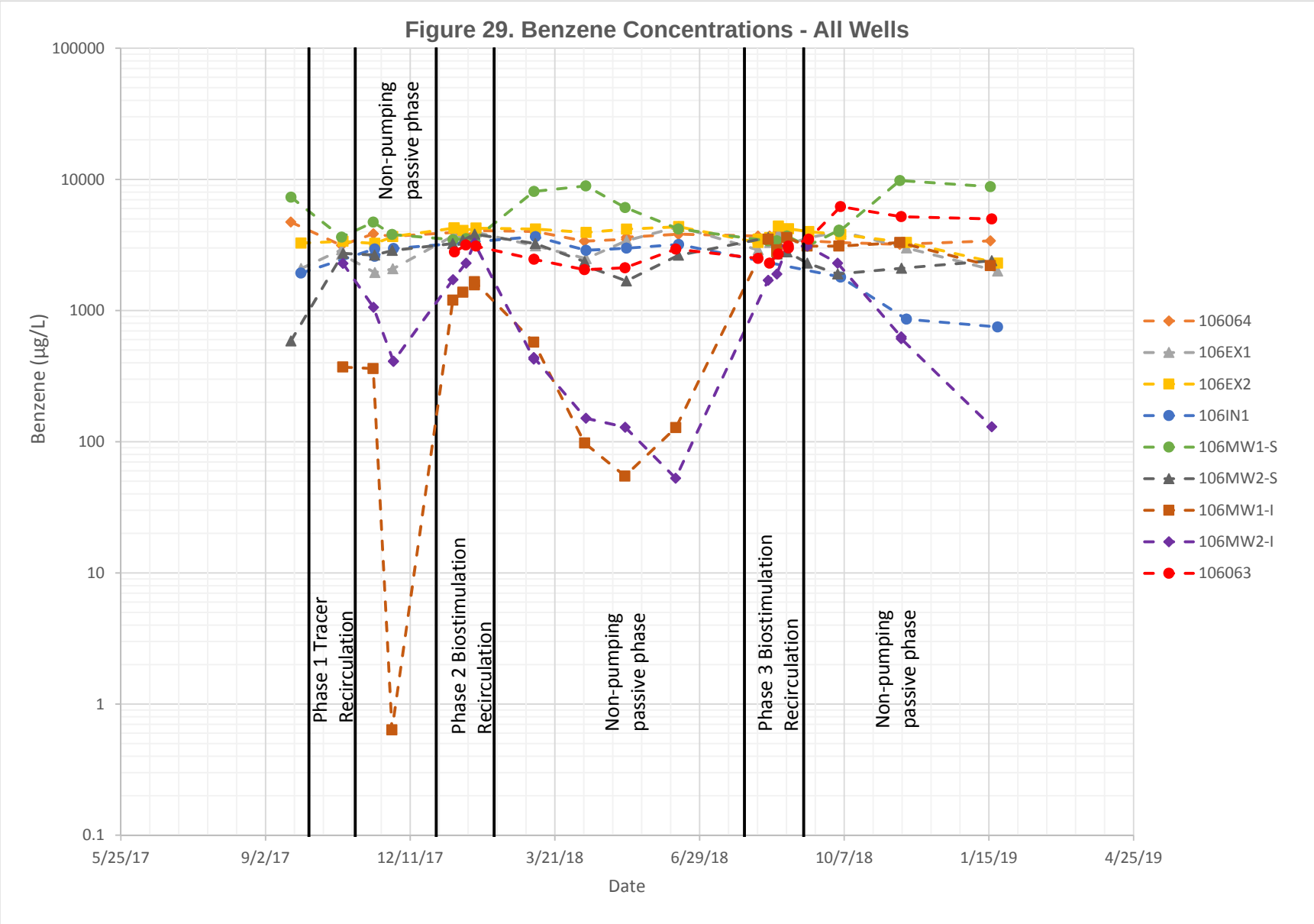
Figure 29. Benzene Concentrations - All Wells
Benzene (µg/L)
100000
10000
1000
100
10
1
0.1
5/25/17
9/2/17
12/11/17
3/21/18
6/29/18
10/7/18
1/15/19
4/25/19
Date
Phase 1 Tracer Recirculation
Non-pumping passive phase
Phase 2 Biostimulation Recirculation
Non-pumping passive phase
Phase 3 Biostimulation Recirculation
Non-pumping passive phase
106064
106EX1
106EX2
106IN1
106MW1-S
106MW2-S
106MW1-I
106MW2-I
106063

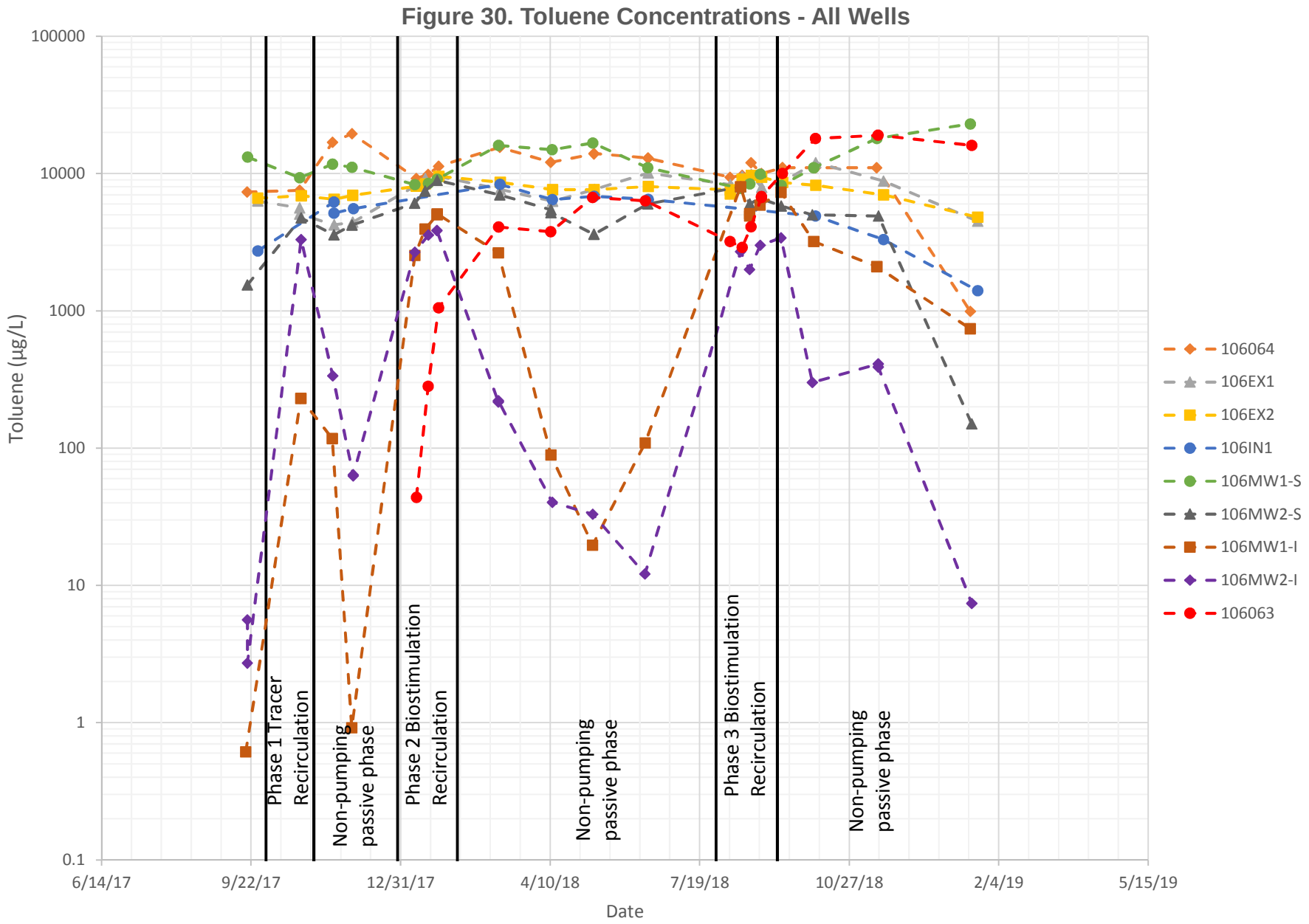
Figure 30. Toluene Concentrations - All Wells
Toluene (µg/L)
100000
10000
1000
100
10
1
0.1
6/14/17
9/22/17
12/31/17
4/10/18
7/19/18
10/27/18
2/4/19
5/15/19
Date
Phase 1 Tracer
Recirculation
Non-pumping
passive phase
Phase 2 Biostimulation
Recirculation
Non-pumping
passive phase
Phase 3 Biostimulation
Recirculation
Non-pumping
passive phase
106064
106EX1
106EX2
106IN1
106MW1-S
106MW2-S
106MW1-I
106MW2-I
106063

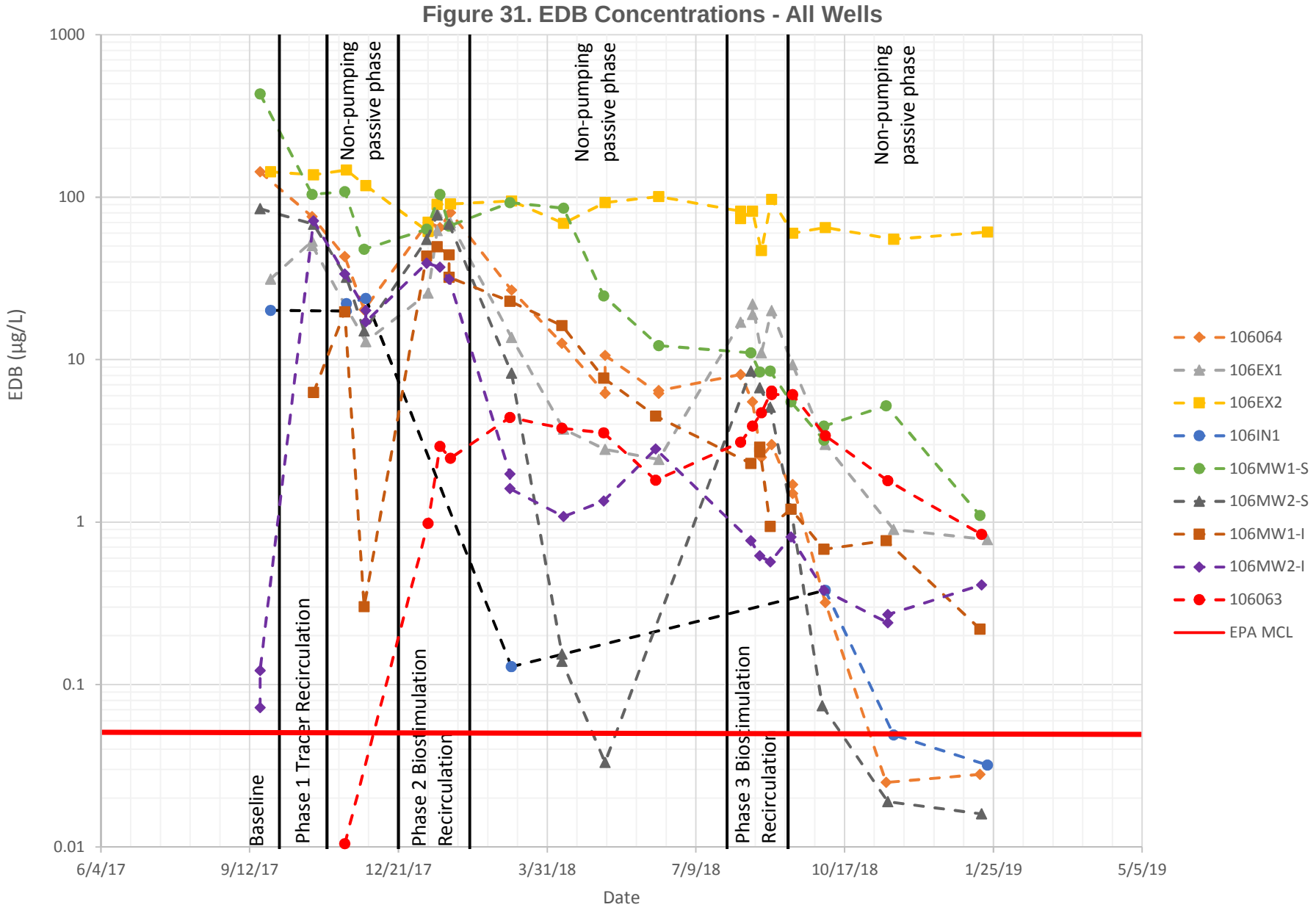
Figure 31. EDB Concentrations - All Wells
EDB (µg/L)
1000
100
10
1
0.1
0.01
6/4/17
9/12/17
12/21/17
3/31/18
7/9/18
10/17/18
1/25/19
5/5/19
Date
Baseline
Phase 1 Tracer Recirculation
Non-pumping passive phase
Phase 2 Biostimulation Recirculation
Non-pumping passive phase
Phase 3 Biostimulation Recirculation
Non-pumping passive phase
106064
106EX1
106EX2
106IN1
106MW1-S
106MW2-S
106MW1-I
106MW2-I
106063
EPA MCL

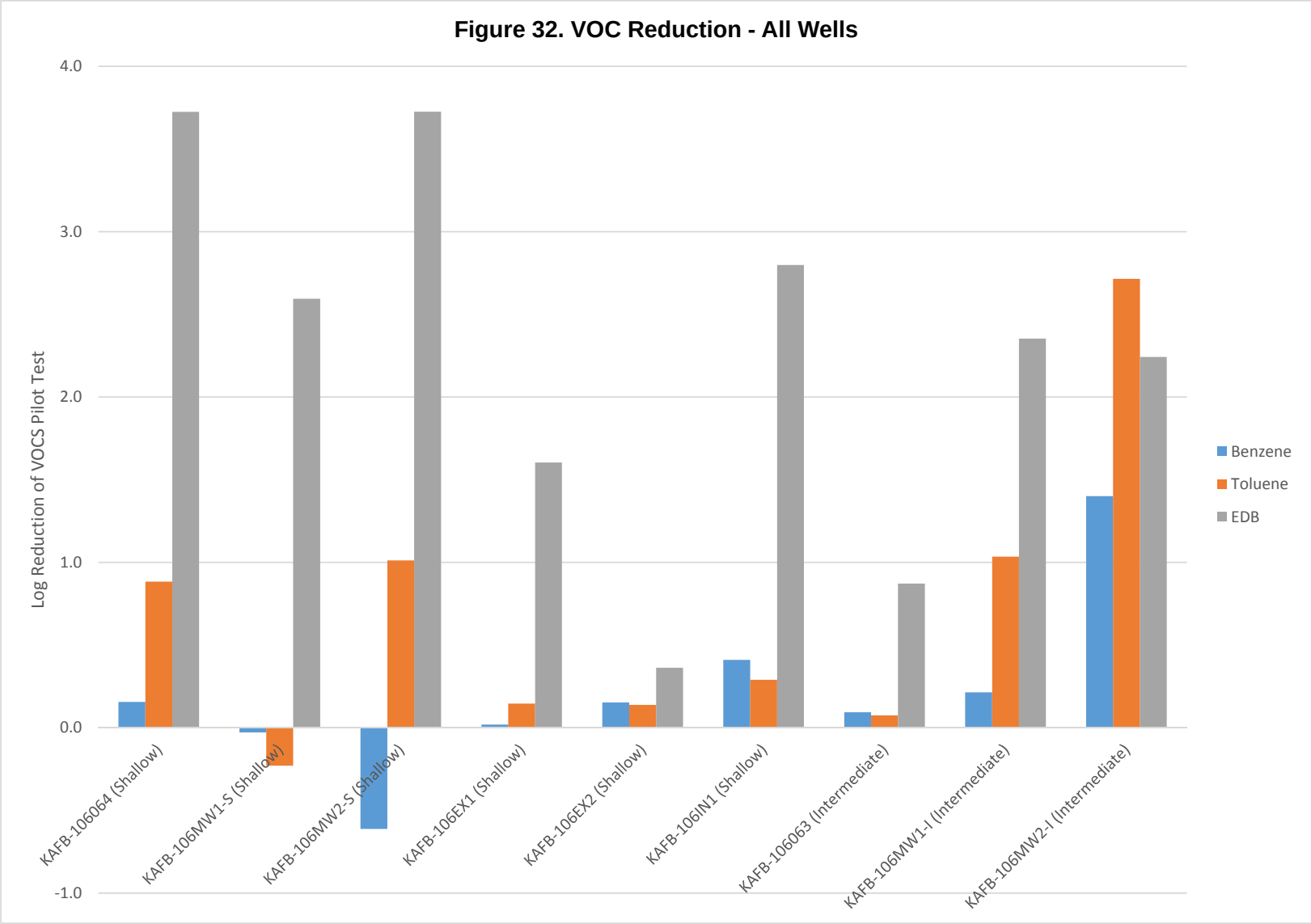
Figure 32. VOC Reduction - All Wells
Log Reduction of VOCS Pilot Test
4.0
3.0
2.0
1.0
0.0
-1.0
KAFB-106064 (Shallow)
KAFB-106MW1-S (Shallow)
KAFB-106MW2-S (Shallow)
KAFB-106EX1 (Shallow)
KAFB-106EX2 (Shallow)
KAFB-106IN1 (Shallow)
KAFB-106063 (Intermediate)
KAFB-106MW1-I (Intermediate)
KAFB-106MW2-I (Intermediate)
Benzene
Toluene
EDB

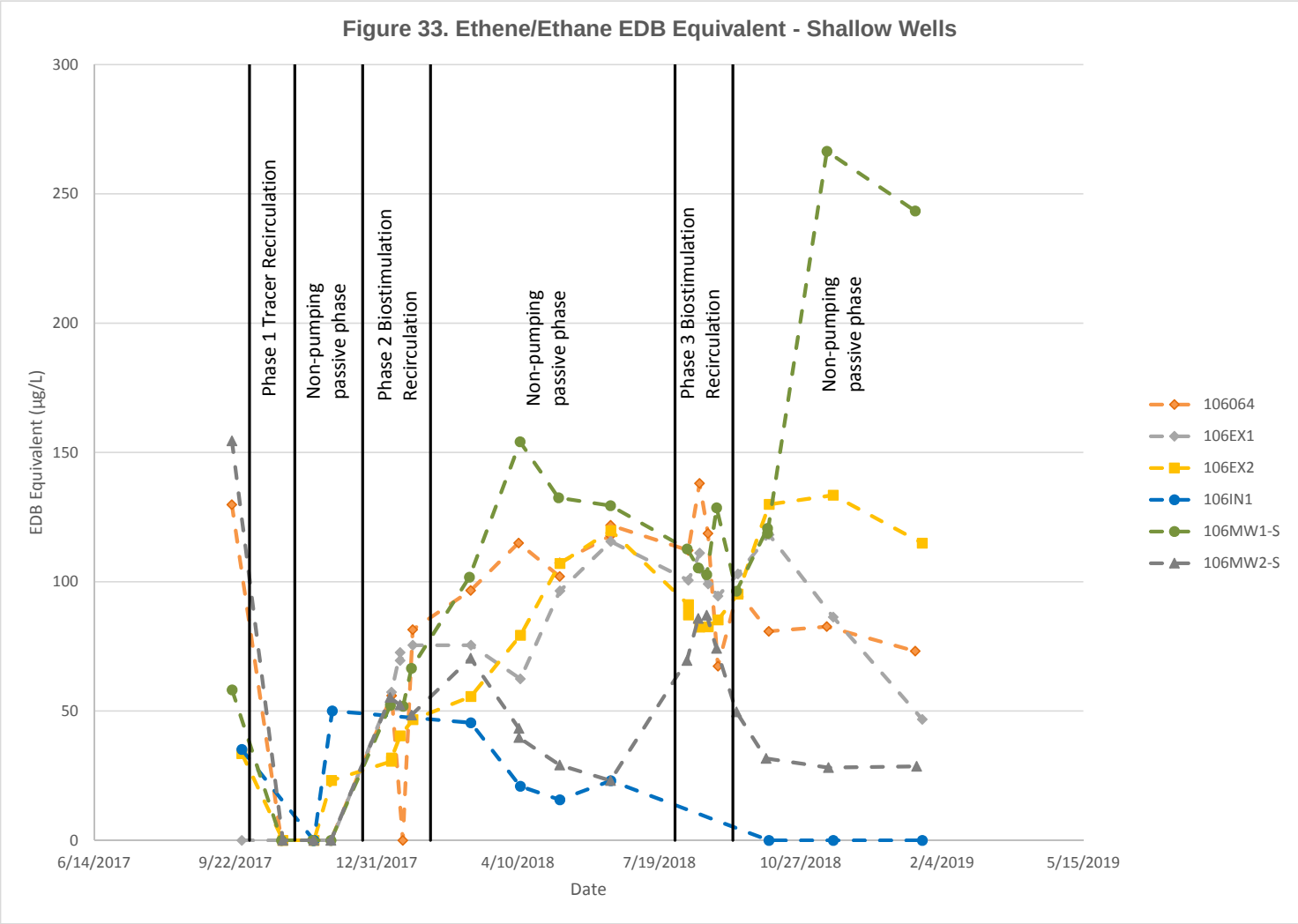
Figure 33. Ethene/Ethane EDB Equivalent - Shallow Wells
EDB Equivalent (µg/L)
300
250
200
150
100
50
0
6/14/2017
9/22/2017
12/31/2017
4/10/2018
7/19/2018
10/27/2018
2/4/2019
5/15/2019
Date
Phase 1 Tracer Recirculation
Non-pumping passive phase
Phase 2 Biostimulation Recirculation
Non-pumping passive phase
Phase 3 Biostimulation Recirculation
Non-pumping passive phase
106064
106EX1
106EX2
106IN1
106MW1-S
106MW2-S

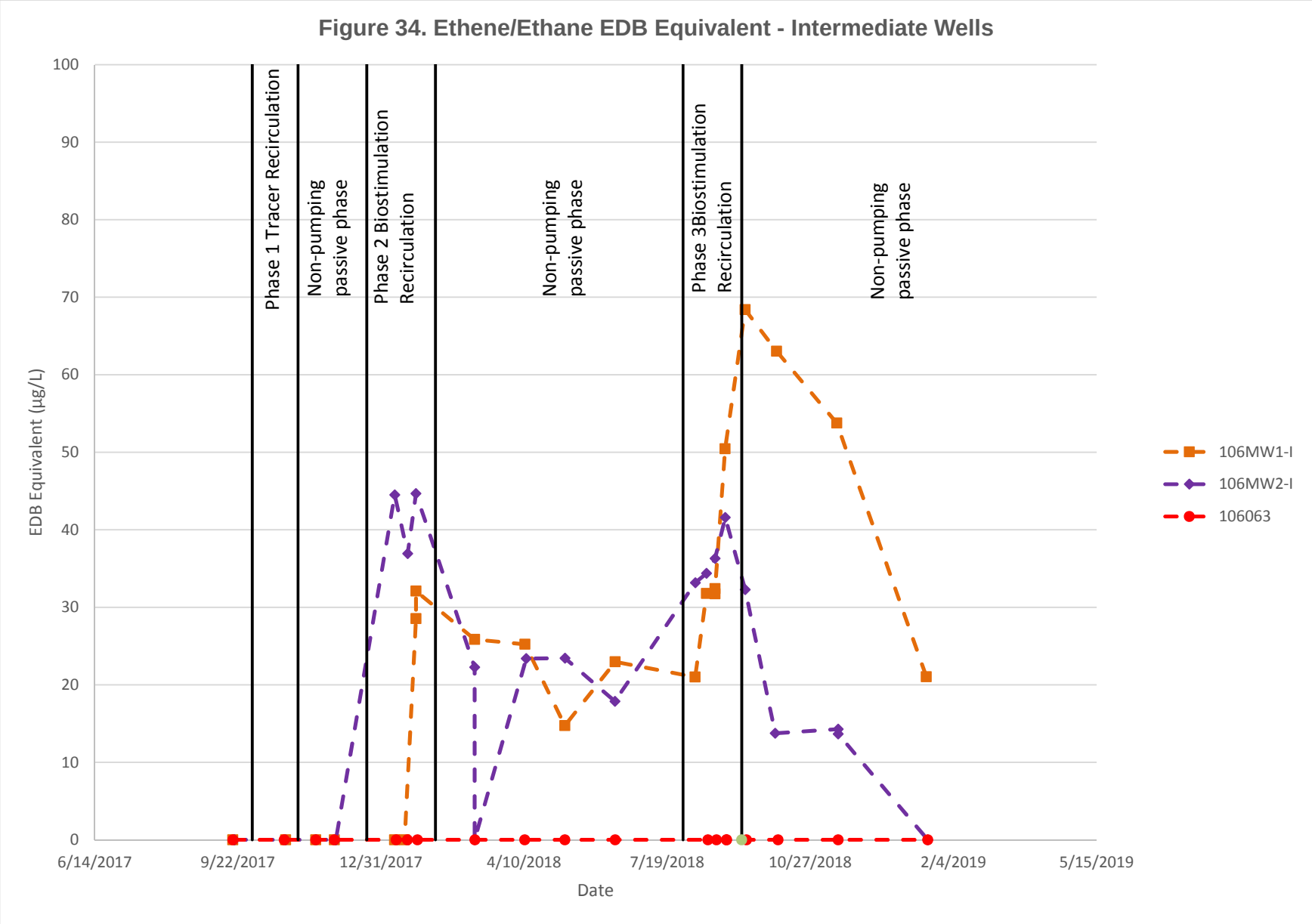
Figure 34. Ethene/Ethane EDB Equivalent - Intermediate Wells
EDB Equivalent (µg/L)
100
90
80
70
60
50
40
30
20
10
0
6/14/2017
9/22/2017
12/31/2017
4/10/2018
7/19/2018
10/27/2018
2/4/2019
5/15/2019
Date
Phase 1 Tracer Recirculation
Non-pumping passive phase
Phase 2 Biostimulation Recirculation
Non-pumping passive phase
Phase 3Biostimulation Recirculation
Non-pumping passive phase
106MW1-I
106MW2-I
106063

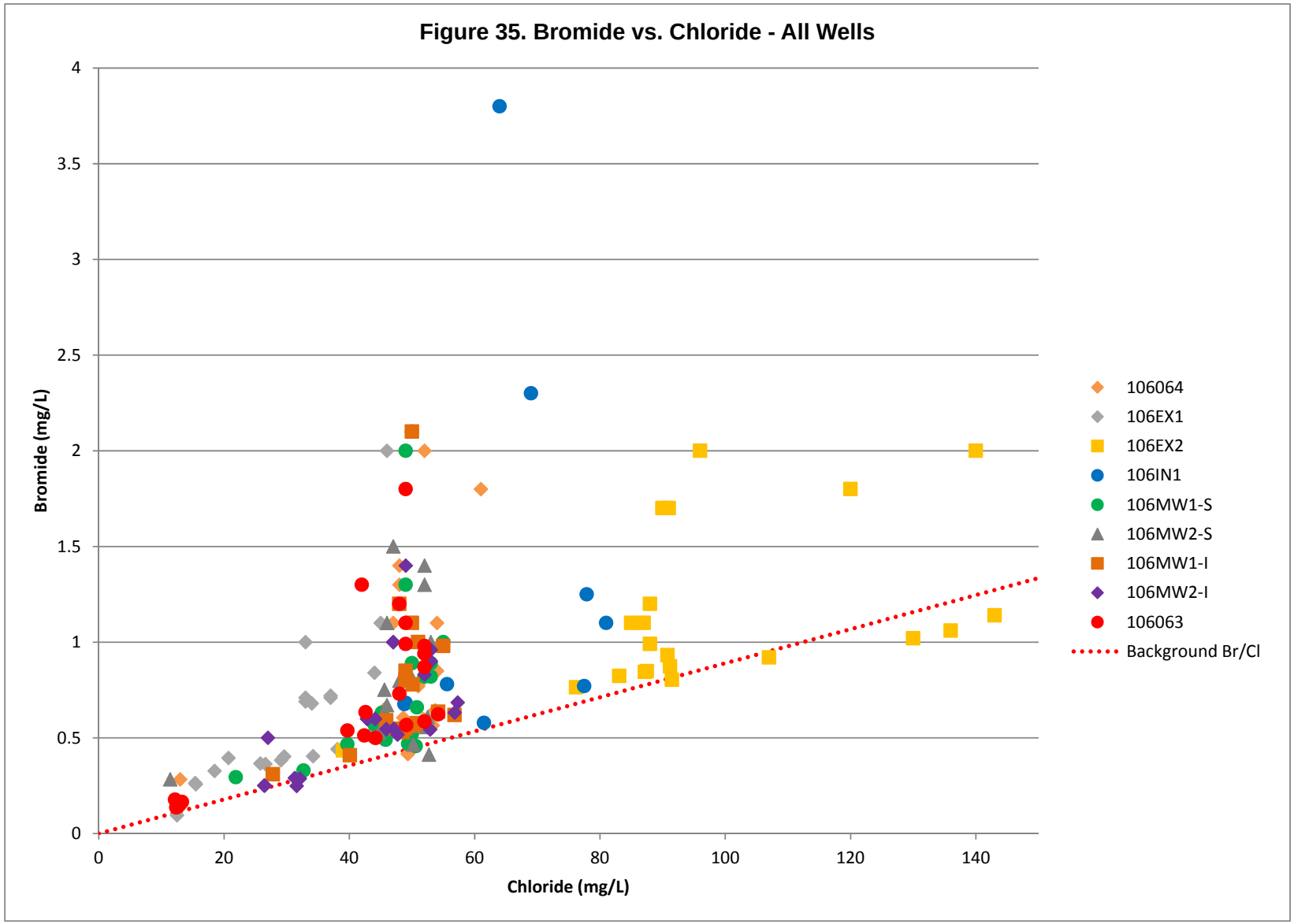
Figure 35. Bromide vs. Chloride - All Wells
Bromide (mg/L)
Chloride (mg/L)
0
0.5
1
1.5
2
2.5
3
3.5
4
0
20
40
60
80
100
120
140
106064
106EX1
106EX2
106IN1
106MW1-S
106MW2-S
106MW1-I
106MW2-I
106063
Background Br/Cl

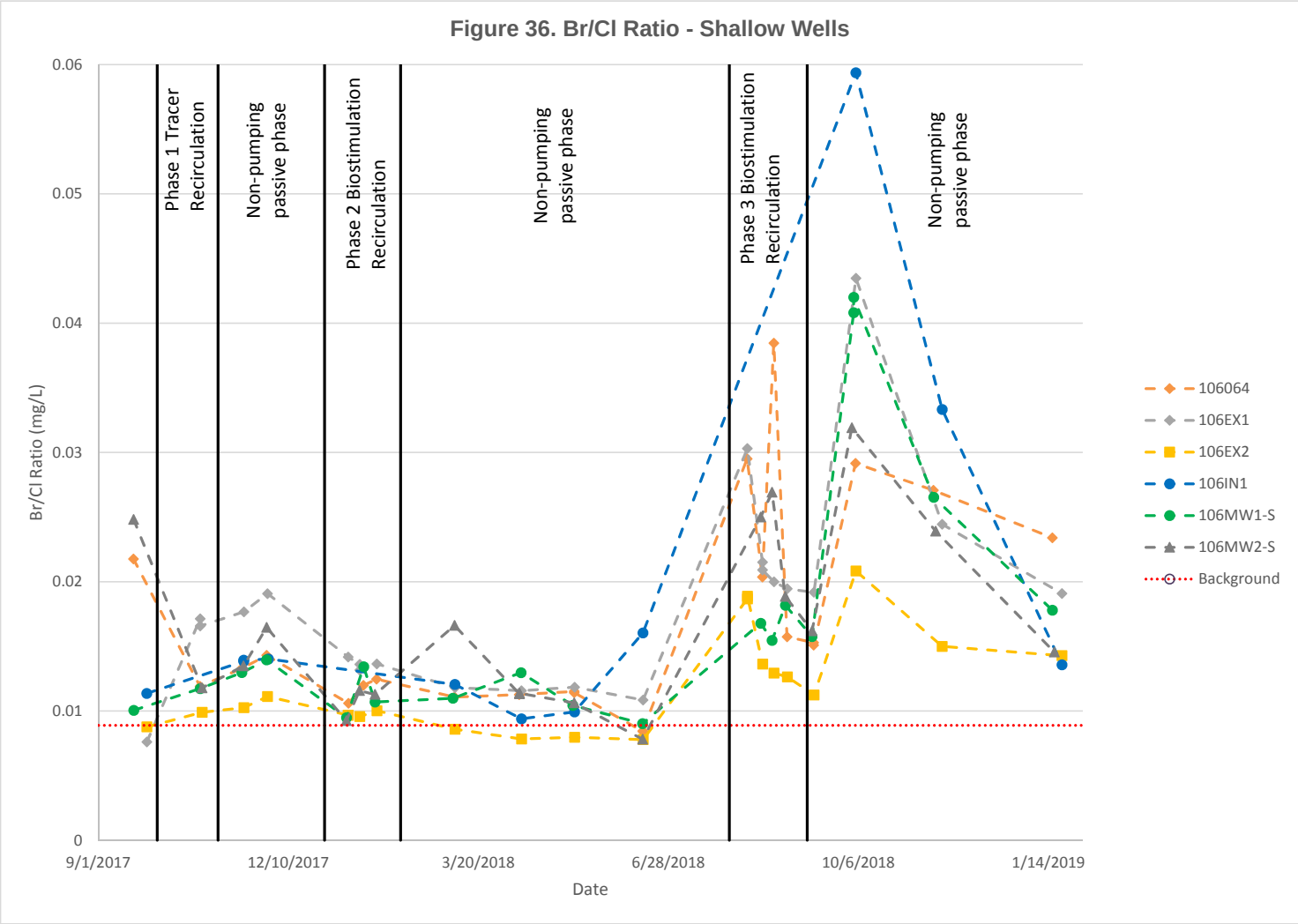
Figure 36. Br/Cl Ratio - Shallow Wells
Br/Cl Ratio (mg/L)
0.06
0.05
0.04
0.03
0.02
0.01
0
9/1/2017
12/10/2017
3/20/2018
6/28/2018
10/6/2018
1/14/2019
Date
Phase 1 Tracer Recirculation
Non-pumping passive phase
Phase 2 Biostimulation Recirculation
Non-pumping passive phase
Phase 3 Biostimulation Recirculation
Non-pumping passive phase
106064
106EX1
106EX2
106IN1
106MW1-S
106MW2-S
Background

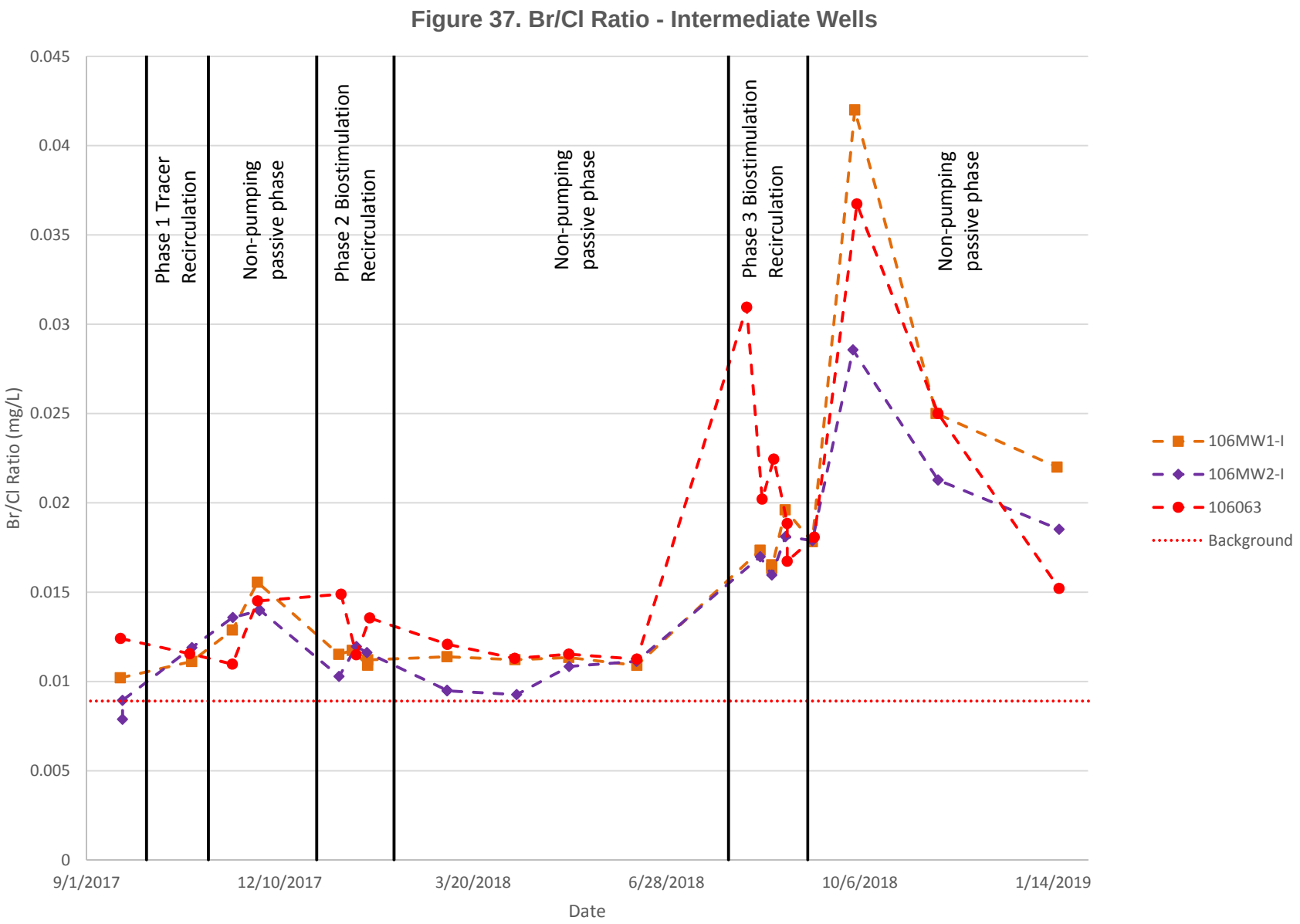
Figure 37. Br/Cl Ratio - Intermediate Wells
Br/Cl Ratio (mg/L)
0.045
0.04
0.035
0.03
0.025
0.02
0.015
0.01
0.005
0
9/1/2017
12/10/2017
3/20/2018
6/28/2018
10/6/2018
1/14/2019
Date
Phase 1 Tracer Recirculation
Non-pumping passive phase
Phase 2 Biostimulation Recirculation
Non-pumping passive phase
Phase 3 Biostimulation Recirculation
Non-pumping passive phase
106MW1-I
106MW2-I
106063
Background

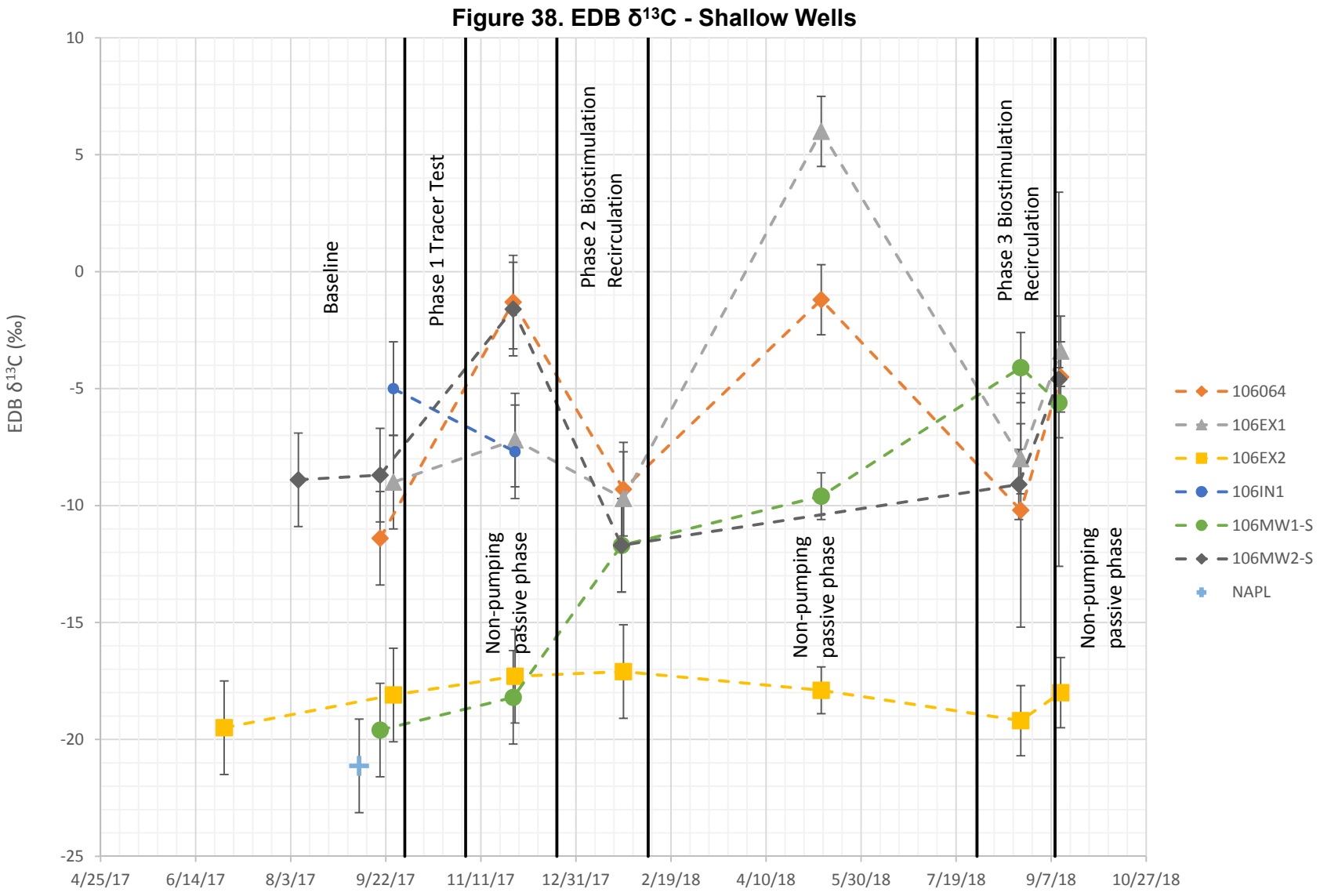
Figure 38. EDB δ13C - Shallow Wells
EDB δ13C (‰)
10
5
0
-5
-10
-15
-20
-25
4/25/17
6/14/17
8/3/17
9/22/17
11/11/17
12/31/17
2/19/18
4/10/18
5/30/18
7/19/18
9/7/18
10/27/18
Baseline
Phase 1 Tracer Test
Non-pumping passive phase
Phase 2 Biostimulation Recirculation
Non-pumping passive phase
Phase 3 Biostimulation Recirculation
Non-pumping passive phase
106064
106EX1
106EX2
106IN1
106MW1-S
106MW2-S
NAPL

TABLES

Table 1
Well Completion and Survey Data

Well ID	Well Type	Date Completed	Survey Date	Easting[a]	Northing[a]	Ground Elevation[b]	Top of Well Vault/Protective Casing Elevation[b]	Top of PVC Elevation[b]	Water Level (feet bgs)[c]	Screened Interval (feet bgs)[d]	Well Depth[d] (feet bgs)	Pump Intake (feet bgs)[d]	Casing Diameter (inches)	Casing Type
Newly Installed Wells														
KAFB-106EX1	Extraction	3/12/2017	9/28/2017	1542416.04	1473778.98	5349.35	5349.35	5345.82	477.00	487 - 502	507	491	6.00	SDR 17 PVC/SS Screen
KAFB-106EX2	Extraction	2/26/2017	9/28/2017	1542255.24	1473822.85	5346.84	5346.84	5343.50	477.00	487 - 502	507	491	6.00	SDR 17 PVC/SS Screen
KAFB-106IN1	Injection	3/20/2017	9/28/2017	1542327.02	1473797.07	5348.37	5348.37	5345.07	477.00	477 - 497	502	492	6.00	SDR 17 PVC/SS Screen
KAFB-106MW1-S	GWMW	1/12/2017	9/28/2017	1542355.49	1473838.55	5347.45	5347.53	5347.03	478.00	463 - 498	500.5	488	4.00	Schedule 80 PVC/Screen
KAFB-106MW1-I	GWMW							5347.07	478.00	513 - 523	528	518	3.00	Schedule 80 PVC/Screen
KAFB-106MW2-S	GWMW	2/16/2017	9/28/2017	1542305.04	1473785.32	5347.97	5348.06	5347.55	478.00	463 - 498	500.5	488	4.00	Schedule 80 PVC/Screen
KAFB-106MW2-I	GWMW							5347.57	478.00	513 - 523	528	518	3.00	Schedule 80 PVC/Screen
Existing Wells														
KAFB-106064	GWMW	4/8/2011	4/15/2011	1542358.76	1473788.79	5347.90	5351.10	5350.50	491.00	488 - 508	513	495	5.00	Schedule 80 PVC/Screen
KAFB-106063	GWMW	4/8/2011	4/15/2011	1542371.25	1473763.99	5348.50	5351.90	5351.20	491.40	508 - 523	528	511	5.00	Schedule 80 PVC/Screen

[a]Horizontal Coordinate System: NM_NAD83_ST_PL_Central_FIPS_3002_Feet. Measuring point is from the top of protective casing (GWMWs), or vault top (extraction and injection wells).

[b]Elevation above mean sea level. Ground elevation at GWMWs were measured at the northside of the concrete well pad. Ground Elevation at the extraction and injection wells was measured at the top of the well vault.

[c]Average water level measured during well completion, prior to well development.

[d]Screened interval, well depth, and pump intake for existing wells KAFB-106064 and KAFB-106063 is measured from top of casing (approximately 3 feet above ground surface).

bgs - Below ground surface.

GWMW - Groundwater Monitoring Well.

ID - Identification.

KAFB - Kirtland Air Force Base.

NAD83 - North American Datum of 1983.

PVC - Polyvinyl chloride.

SS - Stainless steel.

Table 2
Timeline of Pilot Test Activities

Month	Year	Phase	Event
January - March	2017	N/A	Drilling and construction of two nested groundwater monitoring wells, two extraction wells, and one injection well.
March - May			Surface completion on wells and well development.
March - May			Installation of system pipeline and utilities.
April			Recirculation system delivered to site.
May			Extraction and Injection well down-hole assembly installation; Geotech bladder pump installation.
May			Recirculation system shakedown testing with Calcon.
May - August			Troubleshoot Geotech bladder pump issues.
June - August			Baseline samples collected from all wells except KAFB-106MW1-S due to pump failure.
September			Installation of QED bladder pumps. NAPL detected in KAFB-106MW1-S.
			Recollect baseline samples with new pumps.
			Start system in preparation for Phase 1 on September 26, 2017.
October - November		1	Phase 1 Recirculation (Tracer Test). Fluorescein and deuterated water were injected over a 24 hour period on October 2 through October 3.
November - December			Phase 1 Passive period.
December		2	Start system in preparation for Phase 2 on December 11, 2017.
			Begin injecting amendments on December 22, 2017. Notice that chemical feed pump is leaking; crystallization is observed within check ball housing; turn off system on 12/23/17 to troubleshoot.
			Remix amendment tank to include lower ratios of DAP and lactate. Resume injecting on 12/29/17.
February	2018		Finishing injecting amendments and groundwater for Phase 2 on 2/7/18. Total additions for Phase 2: 150 kg DAP, 290 gallons WilClear Plus®, and 71 kg KI.
February - July			Phase 2 Passive period.
July - August			Data from Phase 2 indicates biostimulation has effectively reduced concentrations of EDB within the pilot test area. Suggested that bioaugmentation be deferred for Phase 3 and additional biostimulation be performed. NMED concurs and approves the Phase 3 Notification Letter in a letter dated August 7, 2018.
July - September		3	Start system for Phase 3 on July 30, 2018. Total additions for Phase 3: 143 kg DAP and 340 gallons WilClear plus. No tracer was used.
September			Phase 3 Passive period began on September 9, 2018.
September			During the first Phase 3 Passive sampling event (9/12/18), the Grundfos pump installed in the injection well failed to lift water after 40 minutes. Excessive drawdown was observed at injection well with transducer, and the pump was shutoff. Tripping out the transducer indicates fine sand, silt, and grey biological growth on the transducer. KAFB-106IN1 is not sampled.
October - November			Samples from the injection well are collected by bailing the sound tube using a stainless steel bailer.
November		4	Phase 4, long-term rebound monitoring began on November 19, 2018.
January - February	2019		Collect first Phase 4 sample on January 16, 17, and 21, 2019. System continues to remain off.

Notes:

DAP - Diammonium phosphate.

IN - Injection well.

KAFB - Kirtland Air Force Base.

kg - Kilograms.

KAFB - Kirtland Air Force Base.

kg - Kilograms.

KI - Potassium iodide.

KI - Potassium iodide.

MW - Monitoring well.

NAPL - Non-aqueous phase liquid.

Table 3
Field Water Quality Measurements

Location Name	Sample No.	Date	Time	Gallons Removed	Depth to Groundwater (feet below TOC)[a]	Temp (^oC)	pH (S.U.)	Spec Cond (mS/cm^2)	DO (mg/L)	ORP (mV)	Turbidity (NTU)
KAFB-106063	106063-BL-071817	7/18/2017	1057	2.5	NM	20.2	7.19	0.379	0.04	-123.8	NR
	106063-BL-091817	9/18/2017	1309	2.5	480.24	21.0	7.22	0.543	2.80	-13.5	0.72
	106063-P1R-100417	10/4/2017	1510	4	480.58	21.0	7.23	0.512	1.27	-24	1.98
	106063-P1R-100617	10/6/2017	952	4	480.58	18.3	7.20	0.495	1.03	82.8	2.01
	106063-P1R-100917	10/9/2017	1052	4	480.55	18.6	7.30	0.493	1.06	66.1	1.48
	106063-P1R-101217	10/12/2017	959	4	480.21	18.5	7.12	0.474	1.18	108.1	1.57
	106063-P1R-101617	10/16/2017	1126	4	480.42	18.3	7.12	0.464	1.41	138	1.63
	106063-P1R-102017	10/20/2017	1027	4	480.39	17.8	7.17	0.440	1.65	157.7	1.19
	106063-P1R-102417	10/24/2017	928	4	480.64	16.7	7.31	0.417	1.94	156.3	1.10
	106063-P1R-110117	11/1/2017	955	4	480.25	17.6	7.18	0.440	2.83	207.9	1.56
	106063-P1P-111517	11/15/2017	950	4	480.09	17.4	7.15	0.436	1.78	181.6	2.09
	106063-P1P-112817	11/28/2017	1010	4	479.64	16.30	7.3	0.43	1.59	152.8	2.43
	106063-P2R-011018	1/10/2018	1440	5	478.62	15.3	7.14	0.658	0.70	-99.6	3.50
	106063-P2R-011818	1/18/2018	1150	5	478.99	15.0	7.23	0.681	0.50	-130.2	3.42
	106063-P2R-012518	1/25/2018	1140	5	478.86	16.0	7.19	0.696	0.33	-155.2	4.61
	106063-P2P-030618	3/6/2018	1440	4	478.68	17.0	7.11	0.723	0.38	-166.7	3.41
	106063-P2P-041018	4/10/2018	1040	5	478.54	17.7	6.99	0.772	0.46	-175.5	6.51
	106063-P2P-050818	5/8/2018	1100	5	478.22	20.4	6.94	0.817	0.37	-188.3	4.17
	106063-P2P-061218	6/12/2018	1515	5	478.71	24.4	6.94	0.869	0.14	-133.6	6.14
	106063-P3R-080818	8/8/2018	955	5	478.99	19.2	6.91	0.856	0.17	-175.3	1.59
	106063-P3R-081618	8/16/2018	945	5	479.08	19.1	6.89	0.866	0.14	-158.6	2.15
	106063-P3R-082218	8/22/2018	1000	5	479.25	18.7	6.92	0.885	0.16	-128.2	3.69
	106063-P3R-082918	8/29/2018	955	5	479.11	18.8	6.81	0.894	0.16	-120.6	7.49
	106063-P3P-091218	9/12/2018	935	5	479.07	18.4	7.12	0.915	0.16	-109.3	1.65
	106063-P3P-100418	10/4/2018	1020	5	479.00	18.9	6.88	0.839	0.10	-133.6	4.24
	106063-P3P-111518	11/15/2018	915	5	479.00	16.8	6.88	0.913	0.14	-111.3	1.81
	106063-P4P-011719	1/17/2019	950	5	479.03	16.7	6.78	0.980	0.16	-113.1	1.25

Table 3
Field Water Quality Measurements

Location Name	Sample No.	Date	Time	Gallons Removed	Depth to Groundwater (feet below TOC)[a]	Temp (^oC)	pH (S.U.)	Spec Cond (mS/cm^2)	DO (mg/L)	ORP (mV)	Turbidity (NTU)
KAFB-106064	106064-BL-081617	8/16/2017	1033	4	NM	19.10	7.00	0.413	0.71	-132.7	7.89
	106064-BL-091917	9/19/2017	1042	4.5	479.45	19.6	6.90	0.607	0.52	-180.5	10.00
	106064-P1R-100417	10/4/2017	1510	4	NM	19.7	7.04	0.75	0.22	-138.7	5.03
	106064-P1R-100617	10/6/2017	925	3.5	480.58	18.2	7.20	0.758	0.09	-152.2	4.12
	106064-P1R-100917	10/9/2017	1450	3.5	479.43	18.3	7.11	0.751	0.11	-157.8	1.34
	106064-P1R-101217	10/12/2017	1348	2.5	479.43	19.7	7.12	0.756	0.00	-241.6	0.64
	106064-P1R-101617	10/16/2017	1423	2.6	479.43	18.9	7.13	0.728	0.00	-236	0.97
	106064-P1R-102017	10/20/2017	1420	2.9	479.50	19.0	7.13	0.721	0	-238.2	0.75
	106064-P1R-102417	10/24/2017	1120	4	479.61	18.0	7.09	0.707	0	-257.5	0.91
	106064-P1R-110117	11/1/2017	1340	4.4	479.60	18.7	7.02	0.719	0	-229.6	1.58
	106064-P1P-111517	11/15/2017	1151	4.5	479.28	17.7	6.92	0.749	0.27	-185.3	4.59
	106064-P1P-112817	11/28/2017	1210	4.5	479.88	17.0	6.96	0.741	0.29	-176.3	4.01
	106064-P2R-011018	1/10/2018	1338	4.5	477.63	16.3	6.90	0.873	0.14	-143.4	2.90
	106064-P2R-011818	1/18/2018	1015	3.2	478.08	16.3	6.74	0.886	0.15	-150.9	3.92
	106064-P2R-012518	1/25/2018	930	3.5	477.90	15.4	6.70	0.964	0.15	-143.2	4.23
	106064-P2P-030718	3/7/2018	935	3.5	477.82	16.3	6.80	1.024	0.15	-155.4	2.17
	106064-P2P-041018	4/10/2018	910	4	477.70	17.4	6.72	1.057	0.14	-180	1.88
	106064-P2P-050918	5/9/2018	904	4	477.40	18.8	6.75	1.068	0.15	-455.5	4.53
	106064-P2P-061418	6/14/2018	1005	5	477.90	20.3	6.76	1.055	0.05	-131.8	11.80
	106064-P3R-080818	8/8/2018	910	4	478.02	18.9	6.68	1.030	0.08	-103.9	6.51
	106064-P3R-081618	8/16/2018	925	5	478.12	19.3	6.74	1.011	0.09	-118	5.18
	106064-P3R-082218	8/22/2018	930	5	478.15	18.6	6.64	1.023	0.09	-112.9	6.25
	106064-P3R-082918	8/29/2018	922	5	478.15	19.0	6.64	1.015	0.10	-114.2	7.21
	106064-P3P-091218	9/12/2018	900	5	478.20	18.9	6.72	1.031	0.09	-124.9	5.15
	106064-P3P-100418	10/4/2018	920	5	NM	18.6	6.63	1.039	0.10	-126.5	7.84
	106064-P3P-111418	11/14/2018	952	5	478.25	17.0	6.86	1.049	0.12	-172	2.50
	106064-P4P-011619	1/16/2019	952	5	478.15	16.5	6.71	1.085	0.12	-126.5	3.09

Table 3
Field Water Quality Measurements

Location Name	Sample No.	Date	Time	Gallons Removed	Depth to Groundwater (feet below TOC)[a]	Temp (^oC)	pH (S.U.)	Spec Cond (mS/cm^2)	DO (mg/L)	ORP (mV)	Turbidity (NTU)
KAFB-106MW1-S	106MW1S-BL-091917	9/19/2017	1510	3	476.31	20.8	7.19	0.738	0.99	-145.2	15.10
	106MW1S-P1R-100417	10/4/2017	1200	5.5	476.56	19.4	7.17	0.704	0.54	-140.9	5.95
	106MW1S-P1R-100617	10/6/2017	1453	5	476.31	19.9	8.40*	0.736	0.34	-139.6	2.43
	106MW1S-P1R-100917	10/9/2017	1218	5	476.19	18.3	7.20	0.729	0.23	-138.3	2.28
	106MW1S-P1R-101217	10/12/2017	1120	5	476.31	18.8	7.29	0.736	0.10	-163.7	2.01
	106MW1S-P1R-101617	10/16/2017	1213	3.6	476.55	18.7	7.31	0.744	0.04	-173.6	1.31
	106MW1S-P1R-102017	10/20/2017	1141	4.1	475.92	18.6	7.32	0.761	0.03	-172.9	1.04
	106MW1S-P1R-102417	10/24/2017	1316	4	476.29	18.9	7.29	0.750	0	-192.2	1.11
	106MW1S-P1R-110117	11/1/2017	1125	4.7	475.65	18.2	7.21	0.747	0.02	-169.1	1.22
	106MW1S-P1P-111517	11/15/2017	1133	6	475.85	17.9	7.28	0.753	0.05	-207	5.42
	106MW1S-P1P-112817	11/28/2017	1125	4.5	475.46	17.4	7.16	0.773	0.10	-187.8	3.31
	106MW1S-P2R-010918	1/9/2018	1307	4.5	474.55	17.6	7.04	0.856	0.18	-153.5	3.28
	106MW1S-P2R-011818	1/18/2018	1400	4.5	474.51	17.1	7.02	0.890	0.13	-180	4.12
	106MW1S-P2R-012418	1/24/2018	1316	3.5	474.60	15.7	6.93	0.914	0.14	-159.2	4.42
	106MW1S-P2P-030618	3/6/2018	1300	4.5	474.35	16.6	7.08	0.995	0.14	-166	2.49
	106MW1S-P2P-041118	4/11/2018	920	4	474.00	17.9	7.00	1.034	0.14	-174.9	2.29
	106MW1S-P2P-050818	5/8/2018	1429	6	473.96	20.8	6.88	1.070	0.11	-585.7	2.09
	106MW1S-P2P-061418	6/14/2018	810	6	474.53	19.3	7.11	0.998	0.11	-121.5	8.58
	106MW1S-P3R-080718	8/7/2018	1315	6	474.64	20.4	6.86	1.029	0.07	-104.8	4.99
	106MW1S-P3R-081518	8/15/2018	1125	6	474.63	19.7	6.93	1.004	0.06	-124.9	7.18
	106MW1S-P3R-082118	8/21/2018	1125	6	474.80	20.1	6.81	1.016	0.07	-108.1	5.84
	106MW1S-P3R-082818	8/28/2018	1135	6	474.66	19.5	6.81	1.026	0.07	-103	5.89
	106MW1S-P3P-091118	9/11/2018	1130	6	474.75	19.2	6.82	1.034	0.08	-114.9	5.14
	106MW1S-P3P-100318	10/3/2018	1020	6	474.78	18.5	6.69	1.068	0.09	-110	5.07
	106MW1S-P3P-111418	11/14/2018	1207	6	474.60	16.5	6.87	1.089	0.12	-119.5	5.56
	106MW1S-P4P-011619	1/16/2019	1314	6	473.60	17.3	6.97	1.124	0.03	-126.2	1.43

Table 3
Field Water Quality Measurements

Location Name	Sample No.	Date	Time	Gallons Removed	Depth to Groundwater (feet below TOC)[a]	Temp (^oC)	pH (S.U.)	Spec Cond (mS/cm^2)	DO (mg/L)	ORP (mV)	Turbidity (NTU)
KAFB-106MW1-I	106MW1I-BL-071817	7/18/2017	1245	2	475.94	19.3	7.55	0.445	9.59	220.1	1.06
	106MW1I-BL-091817	9/18/2017	1140	2	476.12	19.2	7.48	0.46	7.37	194.5	3.02
	106MW1I-P1R-100417	10/4/2017	920	3	NM	18.5	7.52	0.464	7.79	145.2	0.85
	106MW1I-P1R-100617	10/6/2017	1055	3	NM	18.7	7.16	0.464	7.69	117.7	0.61
	106MW1I-P1R-100917	10/9/2017	955	8.7 L	NM	18.2	7.13	0.466	7.81	140	0.62
	106MW1I-P1R-101217	10/12/2017	915	2.9	NM	17.9	7.60	0.41	8.33	230.4	0.73
	106MW1I-P1R-101617	10/16/2017	1018	2.5	NM	18.0	7.62	0.406	8.58	180.5	0.82
	106MW1I-P1R-102017	10/20/2017	955	3.1	NM	18.1	7.60	0.414	8.51	147.3	0.91
	106MW1I-P1R-102517	10/25/2017	946	4	NM	17.5	7.47	0.490	8.40	41	1.79
	106MW1I-P1R-110117	11/1/2017	930	3.8	NM	17.6	7.26	0.611	7.18	26.8	2.53
	106MW1I-P1P-111517	11/15/2017	916	4	NM	17.5	7.23	0.553	1.72	-124.9	4.11
	106MW1I-P1P-112817	11/28/2017	930	5	NM	17.4	7.24	0.488	3.95	36.9	2.09
	106MW1I-P2R-010918	1/9/2018	1114	4	NM	17.0	7.12	0.782	0.83	-153.1	4.76
	106MW1I-P2R-011618	1/16/2018	1030	7	NM	15.3	7.12	0.810	0.43	-158.0	2.81
	106MW1I-P2R-012418	1/24/2018	1052	7.5	NM	16.5	6.94	0.839	0.27	-155.7	3.5
	106MW1I-P2P-030618	3/6/2018	1025	8	NM	16.6	7.22	0.838	0.33	-200.3	4.17
	106MW1I-P2P-041018	4/10/2018	1405	7	NM	18.7	7.22	0.796	0.25	-206	2.31
	106MW1I-P2P-050818	5/8/2018	1018	7	NM	19.2	7.10	0.785	0.27	-203.4	2.09
	106MW1I-P2P-061218	6/12/2018	1455	6	NM	21.1	7.11	0.822	0.21	-159.1	4.51
	106MW1I-P3R-080718	8/7/2018	1027	6	NM	19.4	7.06	0.820	0.19	-129.5	2.95
	106MW1I-P3R-081518	8/15/2018	935	5	NM	18.9	7.10	0.894	0.08	-147.8	3.95
	106MW1I-P3R-082118	8/21/2018	925	5	NM	19.0	7.02	0.943	0.09	-148	5.03
	106MW1I-P3R-082818	8/28/2018	920	5	NM	18.8	7.00	0.981	0.09	-145.4	5.08
	106MW1I-P3P-091118	9/11/2018	932	5	NM	18.6	7.08	1.030	0.10	-150.1	7.15
	106MW1I-P3P-100318	10/3/2018	855	5	NM	18.2	6.92	0.944	0.10	-142.2	4.13
	106MW1I-P3P-111418	11/14/2018	1027	5	NM	17.1	6.87	0.971	0.02*	-123.6	4.74
	106MW1I-P4P-011619	1/16/2019	1119	5	NM	17.0	7.20	0.827	0.09	-138.2	1.11

Table 3
Field Water Quality Measurements

Location Name	Sample No.	Date	Time	Gallons Removed	Depth to Groundwater (feet below TOC)[a]	Temp (^oC)	pH (S.U.)	Spec Cond (mS/cm^2)	DO (mg/L)	ORP (mV)	Turbidity (NTU)
KAFB-106MW2-S	106MW2S-BL-080717	8/7/2017	1234	3	NM	19.6	7.10	0.875	1.01	-93.2	14.80
	106MW2S-BL-091917	9/19/2017	1225	3	476.20*	19.7	6.94	0.765	0.98	-167.8	7.17
	106MW2S-P1R-100417	10/4/2017	948	4	NM	18.7	7.21	0.76	0.75	-188.9	2.45
	106MW2S-P1R-100617	10/6/2017	1142	4	NM	19.0	7.26	0.803	0.50	-196.9	4.6
	106MW2S-P1R-100917	10/9/2017	1446	4	NM	18.3	7.39	0.789	0.52	-191.4	2.41
	106MW2S-P1R-101217	10/12/2017	1412	4	NM	19.2	7.24	0.761	0.35	-200.4	2.26
	106MW2S-P1R-101617	10/16/2017	1445	4	NM	19.3	7.28	0.753	0.28	-207.2	2.91
	106MW2S-P1R-102017	10/20/2017	1429	4	NM	18.9	7.32	0.728	0.25	-218	4.42
	106MW2S-P1R-102517	10/25/2017	1323	4	NM	18.9	7.31	0.708	0	-214.1	1.19
	106MW2S-P1R-110117	11/1/2017	1413	4	NM	18.7	7.15	0.759	0.24	-214.8	1.9
	106MW2S-P1P-111617	11/16/2017	921	4.5	NM	17.5	7.30	0.786	0.06	-198.3	12.3
	106MW2S-P1P-112817	11/28/2017	1302	3.5	NM	18.0	7.21	0.863	0.07	-204.3	3.85
	106MW2S-P2R-010918	1/9/2018	1045	3.5	NM	17.3	6.85	0.852	0.41	-196.2	3.52
	106MW2S-P2R-011618	1/16/2018	945	4	NM	13.7	6.91	0.870	0.35	-172.1	3.10
	106MW2S-P2R-012418	1/24/2018	1345	4	NM	16.3	6.74	0.970	0.32	-174.1	2.97
	106MW2S-P2P-030718	3/7/2018	940	4	NM	15.9	6.78	1.039	0.34	-183.1	3.35
	106MW2S-P2P-041018	4/10/2018	1305	4	NM	19.4	6.91	1.168	0.30	-231.1	5.39
	106MW2S-P2P-050918	5/9/2018	915	4	NM	19.0	7.02	1.132	0.32	-226.5	7.19
	106MW2S-P2P-061418	6/14/2018	905	4	NM	18.9	7.00	1.094	0.06	-150.2	4.97
	106MW2S-P3R-080718	8/7/2018	1020	5	NM	19.1	6.74	1.097	0.25	-108.6	8.79
	106MW2S-P2R-081518	8/15/2018	1130	5	NM	19.7	6.73	1.021	0.11	-153.8	2.89
	106MW2S-P3R-082118	8/21/2018	1140	5	NM	20.1	6.70	1.017	0.12	-151.1	2.88
	106MW2S-P3R-082818	8/28/2018	945	5	NM	18.6	6.73	1.057	0.13	-150	5.15
	106MW2S-P3P-091118	9/11/2018	1200	5	NM	19.4	7.10	0.992	0.13	-158.7	2.77
	106MW2S-P3P-100218	10/2/2018	1040	5	NM	19.0	6.74	0.999	0.07	-165.2	7.59
	106MW2S-P3P-111518	11/15/2018	1423	5	NM	17.9	6.85	1.052	0.12	-132	9.91
	106MW2S-P4P-011719	1/17/2019	1307	5	NM	17.6	6.89	1.129	0.02	-151	9.40

Table 3
Field Water Quality Measurements

Location Name	Sample No.	Date	Time	Gallons Removed	Depth to Groundwater (feet below TOC)[a]	Temp (^oC)	pH (S.U.)	Spec Cond (mS/cm^2)	DO (mg/L)	ORP (mV)	Turbidity (NTU)
KAFB-106MW2-I	106MW2I-BL-072417	7/24/2017	1124	2.5	NM	19.3	7.23	0.431	6.70	199.2	2.84
	106MW2I-BL-091917	9/19/2017	1337	2.5	476.46*	19.7	7.26	0.454	1.72	-118.1	3.16
	106MW2I-P1R-100417	10/4/2017	1142	4	NM	18.6	7.26	0.518	2.38	-154.2	3.08
	106MW2I-P1R-100617	10/6/2017	1412	4	NM	19.4	7.24	0.53	2.24	-156.7	4.85
	106MW2I-P1R-100917	10/9/2017	1216	4	NM	18.3	7.32	0.559	2.28	-140.5	6.20
	106MW2I-P1R-101217	10/12/2017	1130	4	NM	18.4	7.21	0.558	2.23	-137.2	5.71
	106MW2I-P1R-101617	10/16/2017	1251	4	NM	18.8	7.22	0.701	1.50	-160.3	3.81
	106MW2I-P1R-102017	10/20/2017	1153	4	NM	18.6	7.30	0.732	0.52	-218.3	4.84
	106MW2I-P1R-102517	10/25/2017	1117	4	NM	18.1	7.38	0.685	0.14	-228.9	6.55
	106MW2I-P1R-110117	11/1/2017	1126	4	NM	18.3	7.31	0.767	0.28	-271	5.64
	106MW2I-P1P-111517	11/15/2017	1438	4	NM	18.2	7.50	0.749	0.04	-265.4	2.48
	106MW2I-P1P-112917	11/29/2017	929	4	NM	17.4	7.45	0.695	0.07	-259.1	2.07
	106MW2I-P2R-010918	1/9/2018	1353	4	NM	17.5	7.07	0.874	0.35	-226.8	3.17
	106MW2I-P2R-011818	1/18/2018	1355	4	NM	17.3	7.15	0.87	0.30	-234.1	5.19
	106MW2I-P2R-012418	1/24/2018	940	4	NM	15.6	7.01	0.872	0.35	-230.7	3.5
	106MW2I-P2P-030618	3/6/2018	1013	4	NM	16.5	7.09	0.585	0.35	-211.3	3.68
	106MW2I-P2P-041118	4/11/2018	1020	5	NM	18.8	6.96	0.620	0.38	-198.7	4.67
	106MW2I-P2P-050818	5/8/2018	1400	5	NM	20.5	6.96	0.800	0.34	-214.8	3.34
	106MW2I-P2P-061218	6/12/2018	1020	5	NM	19.9	7.07	0.83	0.02	-154.8	4.34
	106MW2I-P3R-080718	8/7/2018	1410	5	NM	21.7	6.93	0.919	0.14	-137.8	7.98
	106MW2I-P3R-081518	8/15/2018	945	5	NM	19.3	6.88	0.912	0.13	-139.2	3.54
	106MW2I-P3R-082118	8/21/2018	950	5	NM	19.2	6.86	0.904	0.14	-141.6	1.39
	106MW2I-P3R-082818	8/28/2018	1140	5	NM	19.7	7.45	0.938	0.13	-132.5	3.47
	106MW2I-P3P-091118	9/11/2018	1015	5	NM	19.1	7.06	0.976	0.15	-130.1	1.40
	106MW2I-P3P-100218	10/2/2018	900	5	NM	18.1	6.73	0.869	0.11	-137.2	4.98
	106MW2I-P3P-111518	11/15/2018	942	5	NM	17.1	6.86	0.861	0.02*	-140.1	4.13
	106MW2I-P4P-011719	1/17/2019	1025	5	NM	16.8	7.20	0.575	0.15	-146.4	0.32

Table 3
Field Water Quality Measurements

Location Name	Sample No.	Date	Time	Gallons Removed	Depth to Groundwater (feet below TOC)[a]	Temp (^oC)	pH (S.U.)	Spec Cond (mS/cm^2)	DO (mg/L)	ORP (mV)	Turbidity (NTU)
KAFB-106EX1	106EX1-BL-062917	6/29/2017	953	3.5	482.37	20.2	7.29	0.57	0.36	-116	2.79
	106EX1-BL-092617	9/26/2017	1218	3.5	476.67	20.3	7.02	0.650	0.53	-162.8	14.80
	106EX1-P1R-100417	10/4/2017	1553	3.5	482.65	20.6	7.04	0.551	2.70	-53.2	1.61
	106EX1-P1R-100617	10/6/2017	1526	3.5	482.31	20.7	7.04	0.541	2.19	-74.9	1.61
	106EX1-P1R-100917	10/9/2017	1524	3.5	480.21	20.0	7.12	0.547	2.29	-69.1	2.72
	106EX1-P1R-101217	10/12/2017	1503	3.5	482.50	20.7	7.07	0.497	2.21	-26	0.93
	106EX1-P1R-101617	10/16/2017	1514	3.5	484.20	20.4	7.16	0.479	2.26	-50	1.34
	106EX1-P1R-102017	10/20/2017	1505	3.5	480.50	20.5	7.10	0.473	2.05	-70	1.27
	106EX1-P1R-102417	10/24/2017	1404	5	482.40	20.3	7.10	0.490	2.08	-69.9	2.96
	106EX1-P1R-110117	11/1/2017	1445	5	483.36	20.2	6.93	0.555	1.72	-104.3	2.22
	106EX1-P1P-111617	11/16/2017	1316	16	476.11	20.3	7.08	0.534	1.1	-129.9	5.49
	106EX1-P1P-112917	11/29/2017	1243	15	476.03	19.6	7.05	0.575	0.56	-122.7	4.91
	106EX1-P2R-011018	1/10/2018	1028	2.5	481.41	19.3	6.95	0.600	0.61	-101.5	4.05
	106EX1-P2R-011618	1/16/2018	1150	5	480.43	18.3	6.96	0.604	0.41	-115.4	3.65
	106EX1-P2R-012518	1/25/2018	1305	5	480.64	19.5	6.88	0.637	0.39	-122.6	3.28
	106EX1-P2P-030718	3/7/2018	1440	5	481.40	20.0	6.82	0.707	0.60	-153.9	4.75
	106EX1-P2P-041118	4/11/2018	1450	5	474.53	20.6	6.82	0.756	0.28	-175.3	12.70
	106EX1-P2P-050918	5/9/2018	1435	6	474.31	20.6	6.84	0.818	0.31	-139.8	6.01
	106EX1-P2P-061418	6/14/2018	1428	10	474.81	20.7	6.88	0.861	0.26	-90.0	9.16
	106EX1-P3R-080818	8/8/2018	1155	6	480.50	20.6	6.92	0.720	0.18	-75.9	5.27
	106EX1-P3R-081618	8/16/2018	1110	7	480.50	20.7	6.89	0.753	0.19	-79.2	1.95
	106EX1-P3R-082218	8/22/2018	1105	6	480.50	20.5	7.01	0.757	0.25	-85	2.47
	106EX1-P3R-082918	8/29/2018	1115	7	480.65	20.7	6.89	0.758	0.13	-96.1	9.11
	106EX1-P3P-091218	9/12/2018	1255	6	474.50	21.2	6.93	0.815	0.54	-117	9.01
	106EX1-P3P-100418	10/4/2018	1440	8	475.35	21.0	6.82	0.996	0.21	-116.8	9.59
	106EX1-P3P-111918	11/19/2018	1345	8	474.50	20.1	6.93	0.911	1.22	-83.2	NR
	106EX1-P4P-012119	1/21/2019	1208	8	478.20	19.4	7.08	0.959	0.73	-110	4.80

Table 3
Field Water Quality Measurements

Location Name	Sample No.	Date	Time	Gallons Removed	Depth to Groundwater (feet below TOC)[a]	Temp (^oC)	pH (S.U.)	Spec Cond (mS/cm^2)	DO (mg/L)	ORP (mV)	Turbidity (NTU)
KAFB-106EX2	106EX2-BL-062917	6/29/2017	1050	3.5	478.34	20.4	7.40	0.883	0.57	-113	3.61
	106EX2-BL-092617	9/26/2017	1257	3.5	476.75	20.4	7.04	0.873	0.50	-157.8	2.27
	106EX2-P1R-100417	10/4/2017	1616	3.5	480.19	20.6	7.12	0.918	0.89	-72.8	1.70
	106EX2-P1R-100617	10/6/2017	1551	3.5	479.60	20.7	7.08	0.929	0.81	-65.3	1.27
	106EX2-P1R-100917	10/9/2017	1554	3.5	482.40	20.2	7.14	0.936	0.61	-70.8	1.59
	106EX2-P1R-101217	10/12/2017	1531	3.5	480.40	20.6	7.09	0.824	0.15	-43.9	0.83
	106EX2-P1R-101617	10/16/2017	1548	3.5	480.50	20.5	7.12	0.843	0.02	-60.4	0.87
	106EX2-P1R-102017	10/20/2017	1540	3.5	478.10	20.8	7.10	0.879	0	-75.9	0.78
	106EX2-P1R-102517	10/25/2017	1410	5	483.00	20.4	7.07	0.834	0.04	-87.7	1.46
	106EX2-P1R-110117	11/1/2017	1521	5	484.85	20.4	6.96	0.908	0.23	-112.7	3.34
	106EX2-P1P-111617	11/16/2017	1355	12	476.09	20.3	7.04	0.945	0.49	-112.1	2.78
	106EX2-P1P-112917	11/29/2017	1326	12	475.85	20.1	6.99	0.999	0.17	-103.7	3.17
	106EX2-P2R-011018	1/10/2018	1105	2	486.17	19.9	7.02	0.937	0.11	-107.8	3.15
	106EX2-P2R-011618	1/16/2018	1250	6	486.40	19.6	6.99	0.918	0.28	-118.8	3.61
	106EX2-P2R-012518	1/25/2018	1345	4.5	486.60	20.1	6.90	0.946	0.29	-123.1	3.10
	106EX2-P2P-030718	3/7/2018	1515	7	485.50	19.9	6.80	1.05	1.50	-127.3	3.22
	106EX2-P2P-041118	4/11/2018	1531	5	474.42	20.6	6.74	1.142	0.29	-152.2	14.00
	106EX2-P2P-050918	5/9/2018	1355	7	474.31	20.6	6.72	1.174	0.32	-142.2	5.81
	106EX2-P2P-061418	6/14/2018	1526	10	474.45	21.1	6.85	1.131	0.05	-102.2	8.88
	106EX2-P3R-080818	8/8/2018	1235	5	487.00	21.0	6.92	1.017	0.08	-81.6	6.92
	106EX2-P3R-081618	8/16/2018	1235	7	487.50	21.0	6.88	1.032	0.13	-118.1	1.57
	106EX2-P3R-082218	8/22/2018	1205	7	487.50	21.0	6.97	1.053	0.13	-117	2.09
	106EX2-P3R-082918	8/29/2018	1215	8	487.50	21.2	6.87	1.044	0.26	-121.4	8.95
	106EX2-P3P-091218	9/12/2018	1355	8	475.12	22.0	6.93	1.061	0.35	-155.4	4.35
	106EX2-P3P-100418	10/4/2018	1525	8	474.98	21.6	6.83	1.089	0.24	-112.7	7.98
	106EX2-P3P-111918	11/19/2018	1440	8	474.61	20.1	6.91	1.047	0.45	-93.3	3.22
	106EX2-P4P-012119	1/21/2019	1305	8	479.02	19.4	6.99	1.154	0.29	-126.7	2.28

Table 3
Field Water Quality Measurements

Location Name	Sample No.	Date	Time	Gallons Removed	Depth to Groundwater (feet below TOC)[a]	Temp (^oC)	pH (S.U.)	Spec Cond (mS/cm^2)	DO (mg/L)	ORP (mV)	Turbidity (NTU)
KAFB-106IN1	106IN1-BL-062917	6/29/2017	815	NR	476.10	19.4	7.20	0.738	0.79	-110.6	17.80
	106IN1-BL-092617	9/26/2017	1105	90	476.85	21.1	7.00	0.736	0.27	-179.7	2.78
	106IN1-P1P-111617	11/16/2017	1100	117	476.15	22.4	6.94	0.937	0.04	-225.1	19.20
	106IN1-P1P-112917	11/29/2017	1055	110	476.14	22.1	6.86	0.934	0.16	-180.9	15.90
	106IN1-P2P-030718	3/7/2018	1343	268	474.80	23.5	6.34	1.750	0.25	-225.4	63.8
	106IN1-P2P-041118	4/11/2018	1355	185	474.53	24.8	6.50	1.744	0.24	-261.6	50.3
	106IN1-P2P-050918	5/9/2018	1235	150	474.20	24.7	6.63	0.846	0.26	-257.2	36.3
	106IN1-P2P-061418	6/14/2018	1310	220	474.84	24.8	6.76	1.701	0.04	-219.5	36.1
	106IN1-P3P-100418[b]	10/4/2018	NA	--	475.35	--	--	--	--	--	--
	106IN1-P3P-111918[b]	11/19/2018	NA	--	474.51	--	--	--	--	--	--
	106IN1-P4P-012119[b]	1/21/2019	NA	--	473.60	--	--	--	--	--	--

Notes:

*Water level was collected prior to pump installation.

[a] Depth to Groundwater measurements were collected prior to purging (static) and during purging activities. The water level included in this table represents the water level collected prior to purging the well. Depth to water could not be measured at KAFB-106MW1-I and KAFB-106MW2-1 due to the size of the casing. KAFB-106MW2-S could not be gauged due to a tubing obstruction downhole.

[b]Sample was collected from sound tube using a stainless steel bailer.

°C - degrees Celcius.

DO - Dissolved oxygen.

KAFB - Kirtland Air Force Base.

mg/L - Milligram per liter.

mS/cm^2 - Millisiemens per square centimeter.

mV - Millivolts.

NM - Not measured.

No. - Number.

NR - Not recorded.

NTU - Nephelometric Turbidity Unit.

S.U. - Standard Unit.

TOC - Top of casing.

Baseline (Phase 1)

Recirculation

Passive

Table 4
Groundwater Sampling Frequency, Locations, and Analytes

Phase	Analyte	Locations[a]	Frequency[b]
Phase 1	Water Isotopes (δ2H) (IRMS) and Dye Tracer (Fluorescein) (Fluorimetric)	6 MWs, 2 EWs, 1 IW	1 event (baseline)
		6 MWs, 2 EWs	8 events (recirculation, collected on Days 2, 4, 7, 10, 14, 18, 23, and 30)
		6 MWs, 2 EWs, 1 IW	2 events (passive, collected during Weeks 2 and 4)
	Microbial Community (QuantArray-Chlor)	6 MWs, 2 EWs, 1 IW	1 event (baseline)
		6 MWs, 2 EWs, 1 IW	1 event (passive, collected during Week 4)
	CSIA (Kuder et at, 2012)	3 MWs[d], 2EWs, 1 IW	1 event (baseline)
		3 MWs[d], 2EWs, 1 IW	1 event (passive, collected during Week 4)
	All Other Analytes[c]	6 MWs, 2 EWs, 1 IW	1 event (baseline)
		6 MWs, 2 EWs	8 events (recirculation, collected on Days 2, 4, 7, 10, 14, 18, 23, and 30)
		6 MWs, 2 EWs, 1 IW	2 events (passive, collected during Weeks 2 and 4)
Phase 2	Microbial Community (QuantArray-Chlor)	6 MWs, 2 EWs	1 event (recirculation, collected during Week 4)
		6 MWs, 2 EWs, 1 IW	1 event (passive, collected at end of Month 3)
	CSIA (Kuder et at, 2012)	3 MWs[d], 2EWs, 1 IW	1 event (recirculation, collected during Week 4)
		3 MWs[d], 2EWs, 1 IW	1 event (passive, collected at end of Month 3)
	All Other Analytes[c]	6 MWs, 2 EWs	3 events (recirculation, collected during Weeks 2, 3, and 4)
		6 MWs, 2 EWs, 1 IW	4 events (passive, collected at end of Months 1, 2, 3, and 4)[e]
Phase 3	Microbial Community (QuantArray-Chlor)	6 MWs, 2 EWs	1 event (recirculation, collected during Week 4)
		6 MWs, 2 EWs, 1 IW	1 event (passive, collected at end of Month 3)
	CSIA (Kuder et at, 2012)	3 MWs[d], 2EWs, 1 IW	1 event (recirculation, collected during Week 4)
		3 MWs[d], 2EWs, 1 IW	1 event (passive, collected at end of Month 3)
	All Other Analytes[c]	6 MWs, 2 EWs	4 events (recirculation, collected during Weeks 2, 3, 4, and 5)[f]
		6 MWs, 2 EWs, 1 IW	3 events (passive, collected at end of Months 1, 2, and 3)
Phase 4	Microbial Community (QuantArray-Chlor)	6 MWs, 2 EWs, 1 IW	1 event (passive, collected at the end of Month 2)
	CSIA (Kuder et at, 2012)	3 MWs[d], 2EWs, 1 IW	1 event (passive, collected at the end of Month 2)
	All Other Analytes[c]	6 MWs, 2 EWs, 1 IW	1 event (passive, collected at the end of Month 2)

Notes:

Kuder, T., Wilson J.T., Philip, P., He, Y.T., 2012. Carbon Isotope Fractionation in Reactions of 1,2 Dibromoethane with FeS and Hydrogen Sulfide. Environ. Sci. Technol. 46, 7495-7502.

[a] 4 MWs = KAFB-106064, KAFB-106063, KAFB-106MW1, KAFB-106MW2

2 EWs = KAFB-106EX1 and KAFB-106EX2

1 IW = KAFB-106IN1

[b] The frequency provided is approximate and may be adjusted to collect samples closer together or further apart based on operating conditions and sample results.

Table 4
Groundwater Sampling Frequency, Locations, and Analytes

[c] EDB (EPA Method 8011), VOCs (EPA Method 8260B), reduced gases (RSK-175), anions (E353.2, SM4500PE, and SW9056A), VFAs (E300M), dissolved iron and manganese (EPA Method 6010C), and alkalinity (SM2320B).

[d] Includes shallow monitoring wells KAFB-106064, KAFB-106MW1-S, and KAFB-106MW2-S.

[e] An additional sampling event was conducted at the end of the passive phase (Month 4).

[f] An additional sampling event was conducted at the end of recirculation (Week 5).

CSIA - Compound-Specific Isotope Analysis.

EDB - Ethylene dibromide.

EW - Extraction well.

IRMS - Isotope Ratio Mass Spectrometry.

IW - Injection well.

KAFB - Kirtland Air Force Base.

Microbial Community - Microorganism population.

MW - Monitoring well.

VFA - Volatile Fatty Acid.

VOCs - Volatile organic compound.

Table 5
Manual Extraction Well Water Level Measurements

Well ID	Phase	Date[a]	Depth to Water (feet below TOC)	Drawdown (feet)[b]	Flow Rate (gpm)
KAFB-106EX1	1	6/29/2017	476.20	NA	NA
		10/17/2017	482.58	-6.38	10
		10/23/2017	483.25	-7.05	10
		10/31/2017	483.40	-7.20	10
	2	11/29/2017 (Static)	475.97	NA	NA
		12/13/2017	481.28	-5.31	10
		12/15/2017	481.61	-5.64	10
		12/20/2017	481.64	-5.67	10
		12/22/2017	481.58	-5.61	10
		12/27/2017	481.77	-5.80	10
		1/2/2018	481.71	-5.74	10
		1/4/2018	481.80	-5.83	10
		1/8/2018	481.90	-5.93	10
		1/10/2018	481.41	-5.44	10
		1/12/2018	482.12	-6.15	10
		1/15/2018	480.47	-4.50	10
		1/17/2018	480.90	-4.93	10
		1/19/2018	480.62	-4.65	10
		1/22/2018	480.61	-4.64	10
		1/30/2018	480.52	-4.55	10
	3	6/14/2018 (Static)	474.78	NA	NA
		7/30/2018	479.46	-4.68	10
		8/6/2018	480.11	-5.33	10
		8/13/2018	480.06	-5.28	10
		8/21/2018	480.33	-5.55	10
KAFB-106EX2	1	6/29/2017	476.70	NA	NA
		10/17/2017	483.69	-6.99	10
		10/23/2017	484.36	-7.66	10
		10/31/2017	484.85	-8.15	10
	2	11/29/2017 (Static)	475.93	NA	NA
		12/13/2017	484.53	-8.60	10
		12/15/2017	485.02	-9.09	10
		12/20/2017	485.34	-9.41	10
		12/22/2017	485.40	-9.47	10
		12/27/2017	485.94	-10.01	10
		12/29/2017	486.05	-10.12	10
		1/2/2018	486.14	-10.21	10
		1/4/2018	486.24	-10.31	10
		1/8/2018	486.68	-10.75	9
		1/10/2018	486.17	-10.24	9
		1/12/2018	486.73	-10.80	8
		1/15/2018	486.41	-10.48	8
		1/17/2018	486.73	-10.80	8

Table 5
Manual Extraction Well Water Level Measurements

Well ID	Phase	Date[a]	Depth to Water (feet below TOC)	Drawdown (feet)[b]	Flow Rate (gpm)
KAFB-106EX2	2	1/19/2018	486.61	-10.68	8
		1/22/2018	486.43	-10.50	7
		1/24/2018	486.65	-10.72	7
		1/26/2018	486.65	-10.72	7
		1/30/2018	486.89	-10.96	7
KAFB-106EX2	3	6/14/2018 (Static)	474.34	NA	NA
		7/30/2018	487.07	-12.73	7
		7/31/2018	487.25	-12.91	7
		8/1/2018	487.35	-13.01	7
		8/2/2018	487.34	-13.00	7
		8/6/2018	487.32	-12.98	6
		8/7/2018	487.37	-13.03	6
		8/8/2018	487.50	-13.16	6
		8/9/2018	487.54	-13.20	6
		8/10/2018	487.66	-13.32	6
		8/13/2018	487.51	-13.17	6
		8/14/2018	487.54	-13.20	6
		8/16/2018	487.51	-13.17	5
		8/20/2018	487.52	-13.18	5
		8/21/2018	487.52	-13.18	5
		8/23/2018	487.55	-13.21	5
		8/30/2018	487.36	-13.02	4
		9/4/2018	487.42	-13.08	4

Notes:

[a] Only dates in which water levels were measured during active recirculation are included.

[b]Drawdown is determined by subtracting the static water level measured during the previous passive Phase from the water level measured during the active recirculation (pumping) Phase.

gpm - Gallons per minute.

ID - Identification.

KAFB - Kirtland Air Force Base.

TOC - Top of casing.

Table 6
Amendment Batching Summary

Batch #	Date	Phase	DAP (kg)	KI (kg)	Wilclear Plus® Lactate (gallons)	Potable Water (gallons)	Notes
1	12/22/2017	2	127	33	135	315	Stopped injecting on 12/23/17 due to crystallization issues in chemical feed pump. Removed 150 gallons of batch 1 mixture from tank, and added 150 gallons of water on 12/28. Resumed injection of amendments on 12/29/17 at 0806. Diluted the remaining stored 150 gallons of mixture with 75 gallons of water, and added the 225 gallons to the tank on 1/2/18.
	1/4/2018		0	12	50	200	Mounding increases, decide to add less DAP. Removed 200 gallons of amendment mixture from tank and store in tote to accommodate this batch without DAP. Brought tank level up to ~450 gallons. Start injecting new mixture on 1/5/18 at 0820.
	1/11/2018		0	6	25	100	Also added 100 gallons of diluted mixture that was previously removed from tank on 1/4 (prior to mixing batch 2). Brought tank level up to ~450 gallons. Used same ratio as 1/4/18 mix.
	1/15/2018		0	6	25	100	Also added 100 gallons of diluted mixture that was previously removed from tank on 1/4/18 (prior to mixing batch 2). Brought tank level up to ~510 gallons. Used same ratio as 1/4/18 mix.
2	1/23/2018		23	14	55	220	Brought tank level up from 175 to 450 gallons. Finish Phase 2 injection on 2/3/18 at 1130. Inject remaining 11 gallons of amendment and flush injection well for 1 hour at 17 gpm on 2/7/18. System off at 1725.
3	7/30/2018	3	38	0	90	360	Brought tank level up to 450 gallons. Start injection on 7/30/18 at 1504.
4	8/6/2018		29	0	70	280	Brought tank level up to 500 gallons. Resume injection on 8/6/18 at 1539.
5	8/14/2018		26	0	62	248	Level was at 190 gallons, needed 310 gallons to bring level up to 500. Resume injection on 8/14/18 at 1453.
6	8/23/2018		28	0	66	264	Resume injection on 8/23/18 at 1431.
7	8/30/2018		22	0	52	208	Resume injection on 8/30/18 at 1301. Finish Phase 3 injection on 9/9/18 at 1525. Flush injection well for approximately 1 hour.
		TOTAL	293	71	630	2295	

Notes:

DAP - Diammonium phosphate.

kg - Kilogram.

KI - Potassium iodide.

Table 7
Groundwater Analytical Results for KAFB-106063

	Phase Designation	Original Baseline[b]			New Baseline - QED Pumps[c]			Phase 1 Recirculation			Phase 1 Recirculation					
	Sample ID	106063-BL-071817			106063-BL-091817			106063-P1R-100417			106063-P1R-100617			106063-P1R-100917		
	Sample Date	7/18/2017			9/18/2017			10/4/2017			10/6/2017			10/9/2017		
	Sample Pupose	REG			REG			REG			REG			REG		
Chemical Class and Analytical Method[a]	Parameter	Result	Val Qual	LOQ	Result	Val Qual	LOQ	Result	Val Qual	LOQ	Result	Val Qual	LOQ	Result	Val Qual	LOQ
Microbial Community (cells/mL) QuantArray-Chlor	1,1 DCA Reductase (DCA)	ND	U	4.8	NS	--	--	NS	--	--	NS	--	--	NS	--	--
	1,2 DCA Reductase (DCAR)	ND	U	4.8	NS	--	--	NS	--	--	NS	--	--	NS	--	--
	BAV1 Vinyl Chloride Reductase (BVC)	ND	U	0.5	NS	--	--	NS	--	--	NS	--	--	NS	--	--
	Chloroform Reductase (CFR)	ND	U	4.8	NS	--	--	NS	--	--	NS	--	--	NS	--	--
	Dehalobacter DCM (DCM)	ND	U	4.8	NS	--	--	NS	--	--	NS	--	--	NS	--	--
	Dehalobacter spp. (DHBt)	5950		4.8	NS	--	--	NS	--	--	NS	--	--	NS	--	--
	Dehalobium chlorocoercia (DECO)	1120		4.8	NS	--	--	NS	--	--	NS	--	--	NS	--	--
	Dehalococcoides (DHC)	ND	U	0.5	NS	--	--	NS	--	--	NS	--	--	NS	--	--
	Dehalogenimonas spp. (DHG)	ND	U	4.8	NS	--	--	NS	--	--	NS	--	--	NS	--	--
	Desulfitobacterium spp. (DSB)	316		4.8	NS	--	--	NS	--	--	NS	--	--	NS	--	--
	Desulfuromonas spp. (DSM)	ND	U	4.8	NS	--	--	NS	--	--	NS	--	--	NS	--	--
	Dichloromethane Dehalogenase (DCMA)	ND	U	4.8	NS	--	--	NS	--	--	NS	--	--	NS	--	--
	Epoxyalkane Transferase (EtnE)	261		4.8	NS	--	--	NS	--	--	NS	--	--	NS	--	--
	Ethene Monooxygenase (EtnC)	9.5		4.8	NS	--	--	NS	--	--	NS	--	--	NS	--	--
	Methanogens (MGN)	118		4.8	NS	--	--	NS	--	--	NS	--	--	NS	--	--
	PCE Reductase (PCE-1)	NS	--	--	NS	--	--	NS	--	--	NS	--	--	NS	--	--
	Phenol Hydroxylase (PHE)	11300		4.8	NS	--	--	NS	--	--	NS	--	--	NS	--	--
	PMMO	136		4.8	NS	--	--	NS	--	--	NS	--	--	NS	--	--
	Soluble Methane Monooxygenase (SMMO)	639		4.8	NS	--	--	NS	--	--	NS	--	--	NS	--	--
	Sulfate Reducing Bacteria (APS)	69100		4.8	NS	--	--	NS	--	--	NS	--	--	NS	--	--
	tceA Reductase (TCE)	ND	U	0.5	NS	--	--	NS	--	--	NS	--	--	NS	--	--
	Toluene Dioxygenase (TOD)	113		4.8	NS	--	--	NS	--	--	NS	--	--	NS	--	--
	Toluene Monooxygenase (RMO)	19200		4.8	NS	--	--	NS	--	--	NS	--	--	NS	--	--
	Toluene Monooxygenase 2 (RDEG)	9950		4.8	NS	--	--	NS	--	--	NS	--	--	NS	--	--
	Total Eubacteria (EBAC)	1090000		4.8	NS	--	--	NS	--	--	NS	--	--	NS	--	--
	trans-1,2-DCE Reductase (TDR)	ND	U	4.8	NS	--	--	NS	--	--	NS	--	--	NS	--	--
	Trichlorobenzene Dioxygenase (TCBO)	0.5	J	4.8	NS	--	--	NS	--	--	NS	--	--	NS	--	--
	Vinyl Chloride Reductase (VCR)	ND	U	0.5	NS	--	--	NS	--	--	NS	--	--	NS	--	--
EDB (µg/L) EPA Method 8011	1,2-DIBROMOETHANE	ND	UJ	0.0188	ND	UJ	0.0194	NS	--	--	NS	--	--	NS	--	--
Fluorometric (µg/L) Spectrofluorophotometry	FLUORESCEIN	ND	U	0.01	ND	U	0.01	ND	U	0.01	ND	U	0.01	ND	U	0.01
Reduced Gases (µg/L) RSKSOP-175	ACETYLENE	ND	U	10	ND	U	10	NS	--	--	NS	--	--	NS	--	--
	ETHANE	ND	U	4	ND	U	4	NS	--	--	NS	--	--	NS	--	--
	ETHYLENE	ND	U	5	ND	U	5	NS	--	--	NS	--	--	NS	--	--
	METHANE	ND	U	2	ND	U	2	NS	--	--	NS	--	--	NS	--	--
	PROPANE	ND	U	6	ND	U	6	NS	--	--	NS	--	--	NS	--	--
General Chemistry (mg/L) SM2320b, EPA Method 300, EPA Method 353.2, SM4500 PE	ALKALINITY	206		1	311		1	NS	--	--	NS	--	--	NS	--	--
	BROMIDE	0.178		0.125	0.165		0.125	NS	--	--	NS	--	--	NS	--	--
	CHLORIDE	15.7		0.33	13.3		0.33	NS	--	--	NS	--	--	NS	--	--
	IODIDE	ND	U	0.2	ND	U	0.75	NS	--	--	NS	--	--	NS	--	--
	NITRATE	NS	--	--	NS	--	--	NS	--	--	NS	--	--	NS	--	--
	NITRITE	NS	--	--	NS	--	--	NS	--	--	NS	--	--	NS	--	--
	NITROGEN, NITRATE-NITRITE	ND	U	0.375	ND	U	0.375	NS	--	--	NS	--	--	NS	--	--
	O-PHOSPHATE (AS P)	ND	U	0.02	ND	U	0.02	NS	--	--	NS	--	--	NS	--	--
	SULFATE	16.2		1	16.4		1	NS	--	--	NS	--	--	NS	--	--
VFAs (mg/L) EPA Method 300m	ACETIC ACID	ND	U	1	0.63	J	1	NS	--	--	NS	--	--	NS	--	--
	BUTYRIC ACID	ND	U	1	ND	U	1	NS	--	--	NS	--	--	NS	--	--
	FORMIC ACID	ND	U	1	ND	U	1	NS	--	--	NS	--	--	NS	--	--
	LACTIC ACID	ND	U	1	ND	U	1	NS	--	--	NS	--	--	NS	--	--
	PROPIONIC ACID	ND	U	1	ND	U	1	NS	--	--	NS	--	--	NS	--	--
	PYRUVIC ACID	ND	U	1	ND	U	1	NS	--	--	NS	--	--	NS	--	--
	VALERIC ACID	ND	U	1	ND	U	1	NS	--	--	NS	--	--	NS	--	--

Table 7
Groundwater Analytical Results for KAFB-106063

	Phase Designation	Original Baseline[b]			New Baseline - QED Pumps[c]			Phase 1 Recirculation			Phase 1 Recirculation					
	Sample ID	106063-BL-071817			106063-BL-091817			106063-P1R-100417			106063-P1R-100617			106063-P1R-100917		
	Sample Date	7/18/2017			9/18/2017			10/4/2017			10/6/2017			10/9/2017		
	Sample Pupose	REG			REG			REG			REG			REG		
Chemical Class and Analytical Method[a]	Parameter	Result	Val Qual	LOQ	Result	Val Qual	LOQ	Result	Val Qual	LOQ	Result	Val Qual	LOQ	Result	Val Qual	LOQ
Dissolved Metals (mg/L) EPA Method 6010	IRON	0.054		0.06	0.193		0.06	NS	--	--	NS	--	--	NS	--	--
	MANGANESE	0.308		0.006	0.438		0.006	NS	--	--	NS	--	--	NS	--	--
δ2H (0/00) Mass Spectrometry, USGS Reston, VA	DELTA2H	-96.01		-99	-95.56		-99	-94.59		-99	-96.02		-99	-95.95		-99
VOCs (µg/L) EPA Method 8260	1,1,2-TRICHLOROETHANE	ND	U	1	ND	U	1	NS	--	--	NS	--	--	NS	--	--
	1,2,4-TRIMETHYLBENZENE	ND	U	1	ND	U	1	NS	--	--	NS	--	--	NS	--	--
	1,2-DIBROMOETHANE	ND	U	1	ND	U	1	NS	--	--	NS	--	--	NS	--	--
	1,2-DICHLOROETHANE	ND	U	1	1.86	J	1	NS	--	--	NS	--	--	NS	--	--
	1,3,5-TRIMETHYLBENZENE	ND	U	1	ND	U	1	NS	--	--	NS	--	--	NS	--	--
	2-BUTANONE	ND	U	10	ND	U	10	NS	--	--	NS	--	--	NS	--	--
	2-CHLOROTOLUENE	ND	U	1	ND	U	1	NS	--	--	NS	--	--	NS	--	--
	2-HEXANONE	ND	U	5	ND	U	5	NS	--	--	NS	--	--	NS	--	--
	4-METHYL-2-PENTANONE	ND	U	5	ND	U	5	NS	--	--	NS	--	--	NS	--	--
	ACETONE	31.8		10	16.1	J	10	NS	--	--	NS	--	--	NS	--	--
	BENZENE	ND	U	1	ND	U	1	NS	--	--	NS	--	--	NS	--	--
	CARBON DISULFIDE	ND	U	1	ND	U	1	NS	--	--	NS	--	--	NS	--	--
	CHLOROMETHANE	ND	U	1	ND	U	1	NS	--	--	NS	--	--	NS	--	--
	DICHLORODIFLUOROMETHANE	ND	U	2	ND	U	2	NS	--	--	NS	--	--	NS	--	--
	ETHYLBENZENE	ND	U	1	ND	U	1	NS	--	--	NS	--	--	NS	--	--
	ISOPROPYLBENZENE	ND	U	1	ND	U	1	NS	--	--	NS	--	--	NS	--	--
	METHYL TERT-BUTYL ETHER	ND	U	1	0.561	J	1	NS	--	--	NS	--	--	NS	--	--
	METHYLENE CHLORIDE	ND	U	2	ND	U	2	NS	--	--	NS	--	--	NS	--	--
	NAPHTHALENE	ND	U	1	ND	U	1	NS	--	--	NS	--	--	NS	--	--
VOCs (µg/L) EPA Method 8260	N-BUTYLBENZENE	ND	U	1	ND	U	1	NS	--	--	NS	--	--	NS	--	--
	N-PROPYLBENZENE	ND	U	1	ND	U	1	NS	--	--	NS	--	--	NS	--	--
	P-ISOPROPYLTOLUENE	ND	U	1	ND	U	1	NS	--	--	NS	--	--	NS	--	--
	SEC-BUTYLBENZENE	ND	U	1	ND	U	1	NS	--	--	NS	--	--	NS	--	--
	TERT-BUTYLBENZENE	ND	U	1	ND	U	1	NS	--	--	NS	--	--	NS	--	--
	TOLUENE	ND	U	1	ND	U	1	NS	--	--	NS	--	--	NS	--	--
	TRICHLOROETHENE	ND	U	1	ND	U	1	NS	--	--	NS	--	--	NS	--	--
	TRICHLOROFLUOROMETHANE	ND	U	2	ND	U	2	NS	--	--	NS	--	--	NS	--	--
	XYLENES	ND	U	3	ND	U	3	NS	--	--	NS	--	--	NS	--	--

Notes:

a. EPA analytical methods listed are for the most recent sampling event.

b. Samples were collected using Geotech Bladder Pumps.

c. Samples were recollected (except for QuantArray-Chlor analysis) using replacement QED Bladder Pumps.

-- = Not applicable.

δ2H - Delta Deuterium.

0/00 - Per mille.

cells/mL = Cells per milliliter.

EPA = Environmental Protection Agency.

FD = Field duplicate.

ID = Identification.

J = Estimated value, concentration is less than LOQ but greater than laboratory method detection limit (DL).

J+ = Estimated value, concentration is less than LOQ but greater than laboratory method detection limit (DL); biased high.

J- = Estimated value, concentration is less than LOQ but greater than laboratory method detection limit (DL); biased low.

KAFB = Kirtland Air Force Base.

LOQ = Limit of Quantitation

µg/L = Microgram per liter.

mg/L = Milligram per liter.

ND = Not detected.

NS = Not sampled.

REG = Regular/parent sample.

U = Analyte was not detected. The reported numerical value is at or below the LOQ.

UJ = Analyte was not detected. The reported value is estimated.

VAL QUAL = Validation qualifier.

VFA - Volatile fatty acid.

VOC = Volatile organic compound.

Table 7
Groundwater Analytical Results for KAFB-106063

	Phase Designation	Phase 1 Recirculation						Phase 1 Recirculation								
	Sample ID	106063-P1R-101217			106063-P1R-101617			106063-P1R-102017			106063-P1R-102417			106063-P1R-110117		
	Sample Date	10/12/2017			10/16/2017			10/20/2017			10/24/2017			11/1/2017		
	Sample Pupose	REG			REG			REG			REG			REG		
Chemical Class and Analytical Method[a]	**Parameter**	**Result**	**Val Qual**	**LOQ**	**Result**	**Val Qual**	**LOQ**	**Result**	**Val Qual**	**LOQ**	**Result**	**Val Qual**	**LOQ**	**Result**	**Val Qual**	**LOQ**
Microbial Community (cells/mL) QuantArray-Chlor	1,1 DCA Reductase (DCA)	NS	--	--	NS	--	--	NS	--	--	NS	--	--	NS	--	--
	1,2 DCA Reductase (DCAR)	NS	--	--	NS	--	--	NS	--	--	NS	--	--	NS	--	--
	BAV1 Vinyl Chloride Reductase (BVC)	NS	--	--	NS	--	--	NS	--	--	NS	--	--	NS	--	--
	Chloroform Reductase (CFR)	NS	--	--	NS	--	--	NS	--	--	NS	--	--	NS	--	--
	Dehalobacter DCM (DCM)	NS	--	--	NS	--	--	NS	--	--	NS	--	--	NS	--	--
	Dehalobacter spp. (DHBt)	NS	--	--	NS	--	--	NS	--	--	NS	--	--	NS	--	--
	Dehalobium chlorocoercia (DECO)	NS	--	--	NS	--	--	NS	--	--	NS	--	--	NS	--	--
	Dehalococcoides (DHC)	NS	--	--	NS	--	--	NS	--	--	NS	--	--	NS	--	--
	Dehalogenimonas spp. (DHG)	NS	--	--	NS	--	--	NS	--	--	NS	--	--	NS	--	--
	Desulfitobacterium spp. (DSB)	NS	--	--	NS	--	--	NS	--	--	NS	--	--	NS	--	--
	Desulfuromonas spp. (DSM)	NS	--	--	NS	--	--	NS	--	--	NS	--	--	NS	--	--
	Dichloromethane Dehalogenase (DCMA)	NS	--	--	NS	--	--	NS	--	--	NS	--	--	NS	--	--
	Epoxyalkane Transferase (EtnE)	NS	--	--	NS	--	--	NS	--	--	NS	--	--	NS	--	--
	Ethene Monooxygenase (EtnC)	NS	--	--	NS	--	--	NS	--	--	NS	--	--	NS	--	--
	Methanogens (MGN)	NS	--	--	NS	--	--	NS	--	--	NS	--	--	NS	--	--
	PCE Reductase (PCE-1)	NS	--	--	NS	--	--	NS	--	--	NS	--	--	NS	--	--
	Phenol Hydroxylase (PHE)	NS	--	--	NS	--	--	NS	--	--	NS	--	--	NS	--	--
	PMMO	NS	--	--	NS	--	--	NS	--	--	NS	--	--	NS	--	--
	Soluble Methane Monooxygenase (SMMO)	NS	--	--	NS	--	--	NS	--	--	NS	--	--	NS	--	--
	Sulfate Reducing Bacteria (APS)	NS	--	--	NS	--	--	NS	--	--	NS	--	--	NS	--	--
	tceA Reductase (TCE)	NS	--	--	NS	--	--	NS	--	--	NS	--	--	NS	--	--
	Toluene Dioxygenase (TOD)	NS	--	--	NS	--	--	NS	--	--	NS	--	--	NS	--	--
	Toluene Monooxygenase (RMO)	NS	--	--	NS	--	--	NS	--	--	NS	--	--	NS	--	--
	Toluene Monooxygenase 2 (RDEG)	NS	--	--	NS	--	--	NS	--	--	NS	--	--	NS	--	--
	Total Eubacteria (EBAC)	NS	--	--	NS	--	--	NS	--	--	NS	--	--	NS	--	--
	trans-1,2-DCE Reductase (TDR)	NS	--	--	NS	--	--	NS	--	--	NS	--	--	NS	--	--
	Trichlorobenzene Dioxygenase (TCBO)	NS	--	--	NS	--	--	NS	--	--	NS	--	--	NS	--	--
	Vinyl Chloride Reductase (VCR)	NS	--	--	NS	--	--	NS	--	--	NS	--	--	NS	--	--
EDB (µg/L) EPA Method 8011	1,2-DIBROMOETHANE	NS	--	--	NS	--	--	NS	--	--	ND	U	0.0191	NS	--	--
Fluorometric (µg/L) Spectrofluorophotometry	FLUORESCEIN	ND	U	0.01	ND	U	0.01	ND	U	0.01	ND	U	0.01	ND	U	0.01
Reduced Gases (µg/L) RSKSOP-175	ACETYLENE	NS	--	--	NS	--	--	NS	--	--	ND	U	10	NS	--	--
	ETHANE	NS	--	--	NS	--	--	NS	--	--	ND	U	4	NS	--	--
	ETHYLENE	NS	--	--	NS	--	--	NS	--	--	ND	U	5	NS	--	--
	METHANE	NS	--	--	NS	--	--	NS	--	--	ND	U	2	NS	--	--
	PROPANE	NS	--	--	NS	--	--	NS	--	--	ND	U	6	NS	--	--
General Chemistry (mg/L) SM2320b, EPA Method 300, EPA Method 353.2, SM4500 PE	ALKALINITY	NS	--	--	NS	--	--	NS	--	--	213		1	NS	--	--
	BROMIDE	NS	--	--	NS	--	--	NS	--	--	0.149	J-	0.125	NS	--	--
	CHLORIDE	NS	--	--	NS	--	--	NS	--	--	12.9		0.33	NS	--	--
	IODIDE	NS	--	--	NS	--	--	NS	--	--	ND	U	0.75	NS	--	--
	NITRATE	NS	--	--	NS	--	--	NS	--	--	NS	--	--	NS	--	--
	NITRITE	NS	--	--	NS	--	--	NS	--	--	NS	--	--	NS	--	--
	NITROGEN, NITRATE-NITRITE	NS	--	--	NS	--	--	NS	--	--	ND	U	0.375	NS	--	--
	O-PHOSPHATE (AS P)	NS	--	--	NS	--	--	NS	--	--	ND	U	0.02	NS	--	--
	SULFATE	NS	--	--	NS	--	--	NS	--	--	26		1	NS	--	--
VFAs (mg/L) EPA Method 300m	ACETIC ACID	NS	--	--	NS	--	--	NS	--	--	0.65	J	1	NS	--	--
	BUTYRIC ACID	NS	--	--	NS	--	--	NS	--	--	ND	U	1	NS	--	--
	FORMIC ACID	NS	--	--	NS	--	--	NS	--	--	ND	U	1	NS	--	--
	LACTIC ACID	NS	--	--	NS	--	--	NS	--	--	ND	U	1	NS	--	--
	PROPIONIC ACID	NS	--	--	NS	--	--	NS	--	--	ND	U	1	NS	--	--
	PYRUVIC ACID	NS	--	--	NS	--	--	NS	--	--	ND	U	1	NS	--	--
	VALERIC ACID	NS	--	--	NS	--	--	NS	--	--	ND	U	1	NS	--	--

Table 7
Groundwater Analytical Results for KAFB-106063

	Phase Designation	Phase 1 Recirculation						Phase 1 Recirculation								
	Sample ID	106063-P1R-101217			106063-P1R-101617			106063-P1R-102017			106063-P1R-102417			106063-P1R-110117		
	Sample Date	10/12/2017			10/16/2017			10/20/2017			10/24/2017			11/1/2017		
	Sample Pupose	REG			REG			REG			REG			REG		
Chemical Class and Analytical Method[a]	Parameter	Result	Val Qual	LOQ	Result	Val Qual	LOQ	Result	Val Qual	LOQ	Result	Val Qual	LOQ	Result	Val Qual	LOQ
Dissolved Metals (mg/L) EPA Method 6010	IRON	NS	--	--	NS	--	--	NS	--	--	ND	U	0.06	NS	--	--
	MANGANESE	NS	--	--	NS	--	--	NS	--	--	0.0331		0.006	NS	--	--
δ2H (0/00) Mass Spectrometry, USGS Reston, VA	DELTA2H	-95.92		-99	-96.05		-99	-95.37		-99	-97.16		-99	-94.1		-99
VOCs (µg/L) EPA Method 8260	1,1,2-TRICHLOROETHANE	NS	--	--	NS	--	--	NS	--	--	ND	U	1	NS	--	--
	1,2,4-TRIMETHYLBENZENE	NS	--	--	NS	--	--	NS	--	--	ND	U	1	NS	--	--
	1,2-DIBROMOETHANE	NS	--	--	NS	--	--	NS	--	--	ND	U	1	NS	--	--
	1,2-DICHLOROETHANE	NS	--	--	NS	--	--	NS	--	--	0.881	J	1	NS	--	--
	1,3,5-TRIMETHYLBENZENE	NS	--	--	NS	--	--	NS	--	--	ND	U	1	NS	--	--
	2-BUTANONE	NS	--	--	NS	--	--	NS	--	--	ND	U	10	NS	--	--
	2-CHLOROTOLUENE	NS	--	--	NS	--	--	NS	--	--	ND	U	1	NS	--	--
	2-HEXANONE	NS	--	--	NS	--	--	NS	--	--	ND	U	5	NS	--	--
	4-METHYL-2-PENTANONE	NS	--	--	NS	--	--	NS	--	--	ND	U	5	NS	--	--
	ACETONE	NS	--	--	NS	--	--	NS	--	--	ND	U	10	NS	--	--
	BENZENE	NS	--	--	NS	--	--	NS	--	--	ND	U	1	NS	--	--
	CARBON DISULFIDE	NS	--	--	NS	--	--	NS	--	--	ND	U	1	NS	--	--
	CHLOROMETHANE	NS	--	--	NS	--	--	NS	--	--	ND	U	1	NS	--	--
	DICHLORODIFLUOROMETHANE	NS	--	--	NS	--	--	NS	--	--	ND	U	2	NS	--	--
	ETHYLBENZENE	NS	--	--	NS	--	--	NS	--	--	ND	U	1	NS	--	--
	ISOPROPYLBENZENE	NS	--	--	NS	--	--	NS	--	--	ND	U	1	NS	--	--
	METHYL TERT-BUTYL ETHER	NS	--	--	NS	--	--	NS	--	--	ND	U	1	NS	--	--
	METHYLENE CHLORIDE	NS	--	--	NS	--	--	NS	--	--	ND	U	2	NS	--	--
	NAPHTHALENE	NS	--	--	NS	--	--	NS	--	--	ND	U	1	NS	--	--
VOCs (µg/L) EPA Method 8260	N-BUTYLBENZENE	NS	--	--	NS	--	--	NS	--	--	ND	U	1	NS	--	--
	N-PROPYLBENZENE	NS	--	--	NS	--	--	NS	--	--	ND	U	1	NS	--	--
	P-ISOPROPYLTOLUENE	NS	--	--	NS	--	--	NS	--	--	ND	U	1	NS	--	--
	SEC-BUTYLBENZENE	NS	--	--	NS	--	--	NS	--	--	ND	U	1	NS	--	--
	TERT-BUTYLBENZENE	NS	--	--	NS	--	--	NS	--	--	ND	U	1	NS	--	--
	TOLUENE	NS	--	--	NS	--	--	NS	--	--	ND	U	1	NS	--	--
	TRICHLOROETHENE	NS	--	--	NS	--	--	NS	--	--	ND	U	1	NS	--	--
	TRICHLOROFLUOROMETHANE	NS	--	--	NS	--	--	NS	--	--	ND	U	2	NS	--	--
	XYLENES	NS	--	--	NS	--	--	NS	--	--	ND	U	3	NS	--	--

Notes:

a. EPA analytical methods listed are for the most recent sampling event.

b. Samples were collected using Geotech Bladder Pumps.

c. Samples were recollected (except for QuantArray-Chlor analysis) using replacement QED Bladder Pumps.

-- = Not applicable.

δ2H - Delta Deuterium.

0/00 - Per mille.

cells/mL = Cells per milliliter.

EPA = Environmental Protection Agency.

FD = Field duplicate.

ID = Identification.

J = Estimated value, concentration is less than LOQ but greater than laboratory method detection limit (DL).

J+ = Estimated value, concentration is less than LOQ but greater than laboratory method detection limit (DL); biased high.

J- = Estimated value, concentration is less than LOQ but greater than laboratory method detection limit (DL); biased low.

KAFB = Kirtland Air Force Base.

LOQ = Limit of Quantitation

µg/L = Microgram per liter.

mg/L = Milligram per liter.

ND = Not detected.

NS = Not sampled.

REG = Regular/parent sample.

U = Analyte was not detected. The reported numerical value is at or below the LOQ.

UJ = Analyte was not detected. The reported value is estimated.

VAL QUAL = Validation qualifier.

VFA - Volatile fatty acid.

VOC = Volatile organic compound.

Table 7
Groundwater Analytical Results for KAFB-106063

	Phase Designation	Phase 1 Passive			Phase 1 Passive			Phase 2 Recirculation								
	Sample ID	106063-P1P-111517			106063-P1P-112817			106063-P2R-011018			106063-P2R-011818			106063-P2R-012518		
	Sample Date	11/15/2017			11/28/2017			1/10/2018			1/18/2018			1/25/2018		
	Sample Pupose	REG			REG			REG			REG			REG		
Chemical Class and Analytical Method[a]	Parameter	Result	Val Qual	LOQ	Result	Val Qual	LOQ	Result	Val Qual	LOQ	Result	Val Qual	LOQ	Result	Val Qual	LOQ
Microbial Community (cells/mL) QuantArray-Chlor	1,1 DCA Reductase (DCA)	NS	--	--	ND	U	4.9	NS	--	--	NS	--	--	ND	U	8.9
	1,2 DCA Reductase (DCAR)	NS	--	--	ND	U	4.9	NS	--	--	NS	--	--	ND	U	8.9
	BAV1 Vinyl Chloride Reductase (BVC)	NS	--	--	ND	U	0.5	NS	--	--	NS	--	--	ND	U	0.9
	Chloroform Reductase (CFR)	NS	--	--	ND	U	4.9	NS	--	--	NS	--	--	ND	U	8.9
	Dehalobacter DCM (DCM)	NS	--	--	ND	U	4.9	NS	--	--	NS	--	--	ND	U	8.9
	Dehalobacter spp. (DHBt)	NS	--	--	ND	U	4.9	NS	--	--	NS	--	--	123000		8.9
	Dehalobium chlorocoercia (DECO)	NS	--	--	245		4.9	NS	--	--	NS	--	--	20600		8.9
	Dehalococcoides (DHC)	NS	--	--	ND	U	0.5	NS	--	--	NS	--	--	ND	U	0.9
	Dehalogenimonas spp. (DHG)	NS	--	--	ND	U	4.9	NS	--	--	NS	--	--	ND	U	8.9
	Desulfitobacterium spp. (DSB)	NS	--	--	ND	U	4.9	NS	--	--	NS	--	--	48700		8.9
	Desulfuromonas spp. (DSM)	NS	--	--	ND	U	4.9	NS	--	--	NS	--	--	126		8.9
	Dichloromethane Dehalogenase (DCMA)	NS	--	--	ND	U	4.9	NS	--	--	NS	--	--	ND	U	8.9
	Epoxyalkane Transferase (EtnE)	NS	--	--	1970		4.9	NS	--	--	NS	--	--	106		8.9
	Ethene Monooxygenase (EtnC)	NS	--	--	230		4.9	NS	--	--	NS	--	--	ND	U	8.9
	Methanogens (MGN)	NS	--	--	8730		4.9	NS	--	--	NS	--	--	16.9		8.9
	PCE Reductase (PCE-1)	NS	--	--	NS	--	--	NS	--	--	NS	--	--	ND	U	8.9
	Phenol Hydroxylase (PHE)	NS	--	--	53000		4.9	NS	--	--	NS	--	--	20100		8.9
	PMMO	NS	--	--	30.2		4.9	NS	--	--	NS	--	--	NS	--	--
	Soluble Methane Monooxygenase (SMMO)	NS	--	--	788		4.9	NS	--	--	NS	--	--	ND	U	8.9
	Sulfate Reducing Bacteria (APS)	NS	--	--	27200		4.9	NS	--	--	NS	--	--	124000		8.9
	tceA Reductase (TCE)	NS	--	--	ND	U	0.5	NS	--	--	NS	--	--	ND	U	0.9
	Toluene Dioxygenase (TOD)	NS	--	--	ND	U	4.9	NS	--	--	NS	--	--	ND	U	8.9
	Toluene Monooxygenase (RMO)	NS	--	--	6230		4.9	NS	--	--	NS	--	--	9740		8.9
	Toluene Monooxygenase 2 (RDEG)	NS	--	--	115000		4.9	NS	--	--	NS	--	--	14400		8.9
	Total Eubacteria (EBAC)	NS	--	--	698000		4.9	NS	--	--	NS	--	--	11600000		8.9
	trans-1,2-DCE Reductase (TDR)	NS	--	--	ND	U	4.9	NS	--	--	NS	--	--	ND	U	8.9
	Trichlorobenzene Dioxygenase (TCBO)	NS	--	--	ND	U	4.9	NS	--	--	NS	--	--	ND	U	8.9
	Vinyl Chloride Reductase (VCR)	NS	--	--	ND	U	0.5	NS	--	--	NS	--	--	ND	U	
EDB (µg/L) EPA Method 8011	1,2-DIBROMOETHANE	0.0105	J	0.019	ND	U	0.0191	0.981		0.0948	2.92		0.188	2.47	J+	0.194
Fluorometric (µg/L) Spectrofluorophotometry	FLUORESCEIN	ND	U	0.01	ND	U	0.01	NS	--	--	NS	--	--	NS	--	--
Reduced Gases (µg/L) RSKSOP-175	ACETYLENE	ND	U	10	ND	U	10	ND	U	10	ND	U	10	ND	U	10
	ETHANE	ND	U	4	ND	U	4	ND	U	4	ND	U	4	ND	U	4
	ETHYLENE	ND	U	5	ND	U	5	ND	U	5	ND	U	5	1.83	J	5
	METHANE	ND	U	2	ND	U	2	1.71	J	2	46.6		2	39.4	J+	2
	PROPANE	ND	U	6	ND	U	6	ND	U	6	ND	U	6	ND	U	6
General Chemistry (mg/L) SM2320b, EPA Method 300, EPA Method 353.2, SM4500 PE	ALKALINITY	154		1	178		1	284		1	358		1	327		1
	BROMIDE	0.136	J	0.125	0.177	J	0.125	0.634		0.125	0.623		0.25	0.538		0.125
	CHLORIDE	12.4		0.33	12.2		0.33	42.6		0.33	54.2		0.66	39.7		0.33
	IODIDE	ND	U	0.75	ND	U	0.75	ND	U	0.75	ND	U	0.75	ND	U	0.75
	NITRATE	NS	--	--	NS	--	--	NS	--	--	NS	--	--	NS	--	--
	NITRITE	NS	--	--	NS	--	--	NS	--	--	NS	--	--	NS	--	--
	NITROGEN, NITRATE-NITRITE	ND	U	0.375	ND	U	0.375	ND	U	0.375	ND	U	0.375	ND	U	0.375
	O-PHOSPHATE (AS P)	0.0281	J	0.02	0.0116	J	0.02	0.0172	J	0.02	0.0154	J	0.02	ND	U	0.02
	SULFATE	27.7		1	24.8		1	17.2	J+	1	0.873	J+	2	5.29		1
VFAs (mg/L) EPA Method 300m	ACETIC ACID	1.29		1	0.64	J	1	ND	U	1	ND	U	1	0.45	J	1
	BUTYRIC ACID	ND	U	1	ND	U	1	ND	U	1	ND	U	1	ND	U	1
	FORMIC ACID	ND	U	1	ND	U	1	ND	U	1	ND	U	1	ND	U	1
	LACTIC ACID	ND	U	1	ND	U	1	0.94	J	1	1.07		1	1.68		1
	PROPIONIC ACID	ND	U	1	ND	U	1	ND	U	1	ND	U	1	ND	U	1
	PYRUVIC ACID	ND	U	1	ND	U	1	ND	U	1	ND	U	1	ND	U	1
	VALERIC ACID	ND	U	1	ND	U	1	ND	U	1	ND	U	1	ND	U	1

Table 7
Groundwater Analytical Results for KAFB-106063

	Phase Designation	Phase 1 Passive			Phase 1 Passive			Phase 2 Recirculation								
	Sample ID	106063-P1P-111517			106063-P1P-112817			106063-P2R-011018			106063-P2R-011818			106063-P2R-012518		
	Sample Date	11/15/2017			11/28/2017			1/10/2018			1/18/2018			1/25/2018		
	Sample Pupose	REG			REG			REG			REG			REG		
Chemical Class and Analytical Method[a]	Parameter	Result	Val Qual	LOQ	Result	Val Qual	LOQ	Result	Val Qual	LOQ	Result	Val Qual	LOQ	Result	Val Qual	LOQ
Dissolved Metals (mg/L) EPA Method 6010	IRON	ND	U	0.06	ND	U	0.06	0.129		0.06	1.68		0.06	0.254	J-	0.06
	MANGANESE	0.0393		0.006	0.0782		0.006	0.234		0.006	3.56		0.006	0.574	J-	0.006
δ2H (0/00) Mass Spectrometry, USGS Reston, VA	DELTA2H	-95.56		-99	-95.76		-99	NS	--	--	NS	--	--	NS	--	--
VOCs (µg/L) EPA Method 8260	1,1,2-TRICHLOROETHANE	ND	U	1	ND	U	1	ND	U	25	ND	U	12.5	ND	U	25
	1,2,4-TRIMETHYLBENZENE	ND	U	1	ND	U	1	157		25	154		12.5	256		25
	1,2-DIBROMOETHANE	ND	U	1	ND	U	1	ND	U	25	ND	U	12.5	ND	U	25
	1,2-DICHLOROETHANE	ND	U	1	0.605	J	1	ND	U	25	ND	U	12.5	ND	U	25
	1,3,5-TRIMETHYLBENZENE	ND	U	1	ND	U	1	68.9		25	76.8		12.5	120		25
	2-BUTANONE	ND	U	10	ND	U	10	ND	U	250	ND	U	125	ND	U	250
	2-CHLOROTOLUENE	ND	U	1	ND	U	1	ND	U	25	ND	U	12.5	ND	U	25
	2-HEXANONE	ND	U	5	ND	U	5	ND	U	125	ND	U	62.5	ND	U	125
	4-METHYL-2-PENTANONE	ND	U	5	ND	U	5	ND	U	125	46.2	J	62.5	ND	U	125
	ACETONE	8.05	J	10	7.26	J	10	ND	U	250	67.6	J	125	ND	U	250
	BENZENE	ND	U	1	ND	U	1	2800		25	3160		12.5	3100		25
	CARBON DISULFIDE	ND	U	1	ND	U	1	ND	U	25	ND	U	12.5	ND	U	25
	CHLOROMETHANE	ND	U	1	ND	U	1	20.2		25	ND	U	12.5	ND	U	25
	DICHLORODIFLUOROMETHANE	ND	U	2	ND	U	2	ND	U	50	ND	U	25	ND	U	50
	ETHYLBENZENE	ND	U	1	ND	U	1	65.5		25	192		12.5	541		25
	ISOPROPYLBENZENE	ND	U	1	ND	U	1	43	J	25	57		12.5	82.3		25
	METHYL TERT-BUTYL ETHER	ND	U	1	ND	U	1	ND	U	25	ND	U	12.5	ND	U	25
	METHYLENE CHLORIDE	ND	U	2	ND	U	2	ND	U	50	ND	U	25	ND	U	50
	NAPHTHALENE	ND	U	1	ND	U	1	45		25	72.7		12.5	83.7		25
VOCs (µg/L) EPA Method 8260	N-BUTYLBENZENE	ND	U	1	ND	U	1	ND	U	25	8.31	J	12.5	ND	U	25
	N-PROPYLBENZENE	ND	U	1	ND	U	1	31.1	J	25	53.7		12.5	89.9		25
	P-ISOPROPYLTOLUENE	ND	U	1	ND	U	1	ND	U	25	12.5	J	12.5	ND	U	25
	SEC-BUTYLBENZENE	ND	U	1	ND	U	1	ND	U	25	10.9	J	12.5	15.9	J	25
	TERT-BUTYLBENZENE	ND	U	1	ND	U	1	ND	U	25	ND	U	12.5	ND	U	25
	TOLUENE	ND	U	1	ND	U	1	43.8	J	25	282		12.5	1050		25
	TRICHLOROETHENE	ND	U	1	ND	U	1	ND	U	25	ND	U	12.5	ND	U	25
	TRICHLOROFLUOROMETHANE	ND	U	2	ND	U	2	ND	U	50	ND	U	25	ND	U	50
	XYLENES	ND	U	3	ND	U	3	715		75	935		37.5	1380		75

Notes:

a. EPA analytical methods listed are for the most recent sampling event.

b. Samples were collected using Geotech Bladder Pumps.

c. Samples were recollected (except for QuantArray-Chlor analysis) using replacement QED Bladder Pumps.

-- = Not applicable.

δ2H - Delta Deuterium.

0/00 - Per mille.

cells/mL = Cells per milliliter.

EPA = Environmental Protection Agency.

FD = Field duplicate.

ID = Identification.

J = Estimated value, concentration is less than LOQ but greater than laboratory method detection limit (DL).

J+ = Estimated value, concentration is less than LOQ but greater than laboratory method detection limit (DL); biased high.

J- = Estimated value, concentration is less than LOQ but greater than laboratory method detection limit (DL); biased low.

KAFB = Kirtland Air Force Base.

LOQ = Limit of Quantitation

µg/L = Microgram per liter.

mg/L = Milligram per liter.

ND = Not detected.

NS = Not sampled.

REG = Regular/parent sample.

U = Analyte was not detected. The reported numerical value is at or below the LOQ.

UJ = Analyte was not detected. The reported value is estimated.

VAL QUAL = Validation qualifier.

VFA - Volatile fatty acid.

VOC = Volatile organic compound.

Table 7
Groundwater Analytical Results for KAFB-106063

	Phase Designation	Phase 2 Passive												Phase 3 Recirculation					
	Sample ID	106063-P2P-030618			106063-P2P-041018			106063-P2P-050818			106063-P2P-061218			106063-P3R-080818			106063-P3R-081618		
	Sample Date	3/6/2018			4/10/2018			5/8/2018			6/12/2018			8/8/2018			8/16/2018		
	Sample Pupose	REG			REG			REG			REG			REG			REG		
Chemical Class and Analytical Method[a]	Parameter	Result	Val Qual	LOQ	Result	Val Qual	LOQ	Result	Val Qual	LOQ	Result	Val Qual	LOQ	Result	Val Qual	LOQ	Result	Val Qual	LOQ
Microbial Community (cells/mL) QuantArray-Chlor	1,1 DCA Reductase (DCA)	NS	--	--	NS	--	--	ND	U	5	NS	--	--	NS	--	--	NS	--	--
	1,2 DCA Reductase (DCAR)	NS	--	--	NS	--	--	ND	U	5	NS	--	--	NS	--	--	NS	--	--
	BAV1 Vinyl Chloride Reductase (BVC)	NS	--	--	NS	--	--	ND	U	0.5	NS	--	--	NS	--	--	NS	--	--
	Chloroform Reductase (CFR)	NS	--	--	NS	--	--	ND	U	5	NS	--	--	NS	--	--	NS	--	--
	Dehalobacter DCM (DCM)	NS	--	--	NS	--	--	ND	U	5	NS	--	--	NS	--	--	NS	--	--
	Dehalobacter spp. (DHBt)	NS	--	--	NS	--	--	147000		5	NS	--	--	NS	--	--	NS	--	--
	Dehalobium chlorocoercia (DECO)	NS	--	--	NS	--	--	5210		5	NS	--	--	NS	--	--	NS	--	--
	Dehalococcoides (DHC)	NS	--	--	NS	--	--	ND	U	0.5	NS	--	--	NS	--	--	NS	--	--
	Dehalogenimonas spp. (DHG)	NS	--	--	NS	--	--	ND	U	5	NS	--	--	NS	--	--	NS	--	--
	Desulfitobacterium spp. (DSB)	NS	--	--	NS	--	--	78100		5	NS	--	--	NS	--	--	NS	--	--
	Desulfuromonas spp. (DSM)	NS	--	--	NS	--	--	141		5	NS	--	--	NS	--	--	NS	--	--
	Dichloromethane Dehalogenase (DCMA)	NS	--	--	NS	--	--	ND	U	5	NS	--	--	NS	--	--	NS	--	--
	Epoxyalkane Transferase (EtnE)	NS	--	--	NS	--	--	235		5	NS	--	--	NS	--	--	NS	--	--
	Ethene Monooxygenase (EtnC)	NS	--	--	NS	--	--	ND	U	5	NS	--	--	NS	--	--	NS	--	--
	Methanogens (MGN)	NS	--	--	NS	--	--	162		5	NS	--	--	NS	--	--	NS	--	--
	PCE Reductase (PCE-1)	NS	--	--	NS	--	--	ND	U	5	NS	--	--	NS	--	--	NS	--	--
	Phenol Hydroxylase (PHE)	NS	--	--	NS	--	--	4390		5	NS	--	--	NS	--	--	NS	--	--
	PMMO	NS	--	--	NS	--	--	NS	--	--	NS	--	--	NS	--	--	NS	--	--
	Soluble Methane Monooxygenase (SMMO)	NS	--	--	NS	--	--	333		5	NS	--	--	NS	--	--	NS	--	--
	Sulfate Reducing Bacteria (APS)	NS	--	--	NS	--	--	47500		5	NS	--	--	NS	--	--	NS	--	--
	tceA Reductase (TCE)	NS	--	--	NS	--	--	ND	U	0.5	NS	--	--	NS	--	--	NS	--	--
	Toluene Dioxygenase (TOD)	NS	--	--	NS	--	--	ND	U	5	NS	--	--	NS	--	--	NS	--	--
	Toluene Monooxygenase (RMO)	NS	--	--	NS	--	--	3460		5	NS	--	--	NS	--	--	NS	--	--
	Toluene Monooxygenase 2 (RDEG)	NS	--	--	NS	--	--	2120		5	NS	--	--	NS	--	--	NS	--	--
	Total Eubacteria (EBAC)	NS	--	--	NS	--	--	3160000		5	NS	--	--	NS	--	--	NS	--	--
	trans-1,2-DCE Reductase (TDR)	NS	--	--	NS	--	--	ND	U	5	NS	--	--	NS	--	--	NS	--	--
	Trichlorobenzene Dioxygenase (TCBO)	NS	--	--	NS	--	--	ND	U	5	NS	--	--	NS	--	--	NS	--	--
	Vinyl Chloride Reductase (VCR)	NS	--	--	NS	--	--	ND	U		NS	--	--	NS	--	--	NS	--	--
EDB (µg/L) EPA Method 8011	1,2-DIBROMOETHANE	4.4	J+	1.91	3.78	J	1.89	3.54		0.189	1.81		0.0949	3.1		0.031	3.9		0.03
Fluorometric (µg/L) Spectrofluorophotometry	FLUORESCEIN	NS	--	--	NS	--	--	NS	--	--	NS	--	--	NS	--	--	NS	--	--
Reduced Gases (µg/L) RSKSOP-175	ACETYLENE	ND	U	10	ND	U	10	ND	U	10	ND	U	10	ND	U	10	ND	U	10
	ETHANE	ND	U	4	ND	U	4	ND	U	4	ND	U	4	ND	U	4	ND	U	4
	ETHYLENE	3.04	J	5	4.12		5	6.2		5	7.7		5	8.8		5	8.2		5
	METHANE	49.6		2	64.79		2	48.11		2	9.6		2	9.98		2	3.9		2
	PROPANE	ND	U	6	ND	U	6	ND	U	6	ND	U	6	ND	U	6	ND	U	6
General Chemistry (mg/L) SM2320b, EPA Method 300, EPA Method 353.2, SM4500 PE	ALKALINITY	352		1	296		1	372		1	400		1	370		5	380		5
	BROMIDE	0.512		0.25	0.499	J-	0.25	0.566		0.25	0.585		0.25	1.3		1	0.99		0.5
	CHLORIDE	42.4		0.66	44.2		0.66	49.1		0.66	52		0.66	42		1	49		0.5
	IODIDE	ND	U	0.75	ND	U	0.75	ND	U	0.75	ND	U	0.75	ND	U	0.75	1.3		0.75
	NITRATE	NS	--	--	ND	U	0.2	ND	U	0.2	ND	U	0.2	NS	--	--	NS	--	--
	NITRITE	NS	--	--	ND	U	0.2	ND	U	0.2	ND	U	0.2	NS	--	--	NS	--	--
	NITROGEN, NITRATE-NITRITE	ND	U	0.375	NS	--	--	NS	--	--	NS	--	--	ND	R	0.05	ND	U	0.05
	O-PHOSPHATE (AS P)	ND	U	0.02	ND	U	0.02	ND	U	0.02	0.0238		0.02	ND	R	0.15	ND	U	0.15
	SULFATE	ND	U	2	ND	U	2	ND	U	2	ND	U	2	4.1		2	ND	U	1
VFAs (mg/L) EPA Method 300m	ACETIC ACID	1.3		1	2.1		1	0.8	J	1	0.9	J	1	0.6	J	1	0.9	J	1
	BUTYRIC ACID	ND	U	1	ND	U	1	ND	U	1	ND	U	1	ND	U	1	ND	U	1
	FORMIC ACID	ND	U	1	ND	U	1	ND	U	1	ND	U	1	ND	U	1	ND	U	1
	LACTIC ACID	0.98	J	1	0.8	J	1	0.7	J	1	0.6	J	1	0.8	J	1	0.9	J	1
	PROPIONIC ACID	1		1	1		1	ND	U	1	ND	U	1	ND	U	1	ND	U	1
	PYRUVIC ACID	ND	U	1	ND	U	1	ND	U	1	ND	U	1	ND	U	1	ND	U	1
	VALERIC ACID	ND	U	1	ND	U	1	ND	U	1	ND	U	1	ND	U	1	ND	U	1

Table 7
Groundwater Analytical Results for KAFB-106063

	Phase Designation	Phase 2 Passive												Phase 3 Recirculation					
	Sample ID	106063-P2P-030618			106063-P2P-041018			106063-P2P-050818			106063-P2P-061218			106063-P3R-080818			106063-P3R-081618		
	Sample Date	3/6/2018			4/10/2018			5/8/2018			6/12/2018			8/8/2018			8/16/2018		
	Sample Pupose	REG			REG			REG			REG			REG			REG		
Chemical Class and Analytical Method[a]	Parameter	Result	Val Qual	LOQ	Result	Val Qual	LOQ	Result	Val Qual	LOQ	Result	Val Qual	LOQ	Result	Val Qual	LOQ	Result	Val Qual	LOQ
Dissolved Metals (mg/L) EPA Method 6010	IRON	1.54		0.06	2.18	J-	0.06	4.92		0.06	8.3		0.06	4.9		0.05	4.2		0.05
	MANGANESE	1.71		0.006	2.22	J+	0.006	3.19		0.006	4.23		0.006	4.2		0.003	4.5		0.003
δ2H (0/00) Mass Spectrometry, USGS Reston, VA	DELTA2H	NS	--	--	NS	--	--	NS	--	--	NS	--	--	NS	--	--	NS	--	--
VOCs (µg/L) EPA Method 8260	1,1,2-TRICHLOROETHANE	ND	U	25	ND	U	25	ND	U	50	ND	U	25	ND	U	0.5	ND	U	0.5
	1,2,4-TRIMETHYLBENZENE	ND	U	25	190		25	257		50	264		25	210		20	270		100
	1,2-DIBROMOETHANE	ND	U	25	ND	U	25	ND	U	50	ND	U	25	5.3	J+	1	ND	U	1
	1,2-DICHLOROETHANE	ND	U	25	ND	U	25	ND	U	50	ND	U	25	3		1	2.7		1
	1,3,5-TRIMETHYLBENZENE	95.9		25	96.2		25	118		50	131		25	120	J+	0.5	120		0.5
	2-BUTANONE	ND	U	250	ND	U	250	ND	U	500	ND	U	250	3.9	J+	10	3.5	J	10
	2-CHLOROTOLUENE	ND	U	25	ND	U	25	ND	U	50	ND	U	25	ND	U	0.5	38		0.5
	2-HEXANONE	ND	U	125	ND	U	125	ND	U	250	ND	U	125	22	J+	5	22		5
	4-METHYL-2-PENTANONE	ND	U	125	ND	U	125	ND	U	250	69.6	J	125	52	J+	5	52		5
	ACETONE	ND	U	250	ND	U	250	ND	U	500	ND	U	250	24	J+	10	19		10
	BENZENE	2460		25	2050		25	2120		50	2940		25	2300		20	2300		100
	CARBON DISULFIDE	ND	U	25	ND	U	25	ND	U	50	ND	U	25	ND	U	2	ND	U	2
	CHLOROMETHANE	ND	U	25	ND	U	25	ND	U	50	ND	U	25	ND	U	1	ND	U	1
	DICHLORODIFLUOROMETHANE	ND	U	50	ND	U	50	ND	U	100	ND	U	50	ND	U	1	ND	U	1
	ETHYLBENZENE	866		25	784		25	1080		50	1500		25	1100		20	1300		100
	ISOPROPYLBENZENE	91.9		25	106		25	135		50	169		25	160	J+	1	140		1
	METHYL TERT-BUTYL ETHER	ND	U	25	ND	U	25	ND	U	50	ND	U	25	0.45	J+	0.5	0.48	J	0.5
	METHYLENE CHLORIDE	ND	U	50	ND	U	50	ND	U	100	ND	U	50	ND	U	5	ND	U	5
	NAPHTHALENE	69.6		25	80.4		25	126		50	127		25	100	J+	5	100		5
VOCs (µg/L) EPA Method 8260	N-BUTYLBENZENE	ND	U	25	ND	U	25	ND	U	50	17	J	25	16	J+	1	17		1
	N-PROPYLBENZENE	85.8		25	75.7		25	103		50	132		25	100	J+	1	100		1
	P-ISOPROPYLTOLUENE	102		25	105		25	142		50	140		25	150	J+	1	150		1
	SEC-BUTYLBENZENE	14.8	J	25	13.1	J	25	ND	U	50	23.5	J	25	17	J+	1	17		1
	TERT-BUTYLBENZENE	ND	U	25	ND	U	25	ND	U	50	ND	U	25	1.3	J+	1	ND	U	1
	TOLUENE	4080		25	3770		25	6680		50	6320		25	3200		20	2900		100
	TRICHLOROETHENE	ND	U	25	ND	U	25	ND	U	50	ND	U	25	ND	U	1	ND	U	1
	TRICHLOROFLUOROMETHANE	ND	U	50	ND	U	50	ND	U	100	ND	U	50	ND	U	1	ND	U	1
	XYLENES	1580		75	1290		75	1760		150	1850		75	1600		10	2100		50

Notes:

a. EPA analytical methods listed are for the most recent sampling event.

b. Samples were collected using Geotech Bladder Pumps.

c. Samples were recollected (except for QuantArray-Chlor analysis) using replacement QED Bladder Pumps.

-- = Not applicable.

δ2H - Delta Deuterium.

0/00 - Per mille.

cells/mL = Cells per milliliter.

EPA = Environmental Protection Agency.

FD = Field duplicate.

ID = Identification.

J = Estimated value, concentration is less than LOQ but greater than laboratory method detection limit (DL).

J+ = Estimated value, concentration is less than LOQ but greater than laboratory method detection limit (DL); biased high.

J- = Estimated value, concentration is less than LOQ but greater than laboratory method detection limit (DL); biased low.

KAFB = Kirtland Air Force Base.

LOQ = Limit of Quantitation

µg/L = Microgram per liter.

mg/L = Milligram per liter.

ND = Not detected.

NS = Not sampled.

REG = Regular/parent sample.

U = Analyte was not detected. The reported numerical value is at or below the LOQ.

UJ = Analyte was not detected. The reported value is estimated.

VAL QUAL = Validation qualifier.

VFA - Volatile fatty acid.

VOC = Volatile organic compound.

Table 7
Groundwater Analytical Results for KAFB-106063

	Phase Designation	Phase 3 Recirculation						Phase 3 Recirculation			Phase 3 Passive								
	Sample ID	106063-P3R-082218			106063-P3R-082918			106063-P3R-082918-FD			106063-P3P-091218			106063-P3P-100418			106063-P3P-111518		
	Sample Date	8/22/2018			8/29/2018			8/29/2018			9/12/2018			10/4/2018			11/15/2018		
	Sample Pupose	REG			REG			FD			REG			REG			REG		
Chemical Class and Analytical Method[a]	Parameter	Result	Val Qual	LOQ	Result	Val Qual	LOQ	Result	Val Qual	LOQ	Result	Val Qual	LOQ	Result	Val Qual	LOQ	Result	Val Qual	LOQ
Microbial Community (cells/mL) QuantArray-Chlor	1,1 DCA Reductase (DCA)	ND	U	4.8	NS	--	--	NS	--	--	NS	--	--	NS	--	--	ND	U	5.1
	1,2 DCA Reductase (DCAR)	ND	U	4.8	NS	--	--	NS	--	--	NS	--	--	NS	--	--	ND	U	5.1
	BAV1 Vinyl Chloride Reductase (BVC)	ND	U	0.5	NS	--	--	NS	--	--	NS	--	--	NS	--	--	0.3	J	0.5
	Chloroform Reductase (CFR)	ND	U	4.8	NS	--	--	NS	--	--	NS	--	--	NS	--	--	ND	U	5.1
	Dehalobacter DCM (DCM)	ND	U	4.8	NS	--	--	NS	--	--	NS	--	--	NS	--	--	ND	U	5.1
	Dehalobacter spp. (DHBt)	149000		4.8	NS	--	--	NS	--	--	NS	--	--	NS	--	--	44900		5.1
	Dehalobium chlorocoercia (DECO)	5180		4.8	NS	--	--	NS	--	--	NS	--	--	NS	--	--	1430		5.1
	Dehalococcoides (DHC)	2.2		0.5	NS	--	--	NS	--	--	NS	--	--	NS	--	--	13.9		0.5
	Dehalogenimonas spp. (DHG)	ND	U	4.8	NS	--	--	NS	--	--	NS	--	--	NS	--	--	ND	U	5.1
	Desulfitobacterium spp. (DSB)	66100		4.8	NS	--	--	NS	--	--	NS	--	--	NS	--	--	38200		5.1
	Desulfuromonas spp. (DSM)	ND	U	4.8	NS	--	--	NS	--	--	NS	--	--	NS	--	--	28.8		5.1
	Dichloromethane Dehalogenase (DCMA)	ND	U	4.8	NS	--	--	NS	--	--	NS	--	--	NS	--	--	ND	U	5.1
	Epoxyalkane Transferase (EtnE)	49.8		4.8	NS	--	--	NS	--	--	NS	--	--	NS	--	--	ND	U	5.1
	Ethene Monooxygenase (EtnC)	ND	U	4.8	NS	--	--	NS	--	--	NS	--	--	NS	--	--	ND	U	5.1
	Methanogens (MGN)	26.3		4.8	NS	--	--	NS	--	--	NS	--	--	NS	--	--	273		5.1
	PCE Reductase (PCE-1)	ND	U	4.8	NS	--	--	NS	--	--	NS	--	--	NS	--	--	0.5	J	5.1
	Phenol Hydroxylase (PHE)	374		4.8	NS	--	--	NS	--	--	NS	--	--	NS	--	--	2200		5.1
	PMMO	NS	--	--	NS	--	--	NS	--	--	NS	--	--	NS	--	--	NS	--	--
	Soluble Methane Monooxygenase (SMMO)	1490		4.8	NS	--	--	NS	--	--	NS	--	--	NS	--	--	642		5.1
	Sulfate Reducing Bacteria (APS)	143000		4.8	NS	--	--	NS	--	--	NS	--	--	NS	--	--	80200		5.1
	tceA Reductase (TCE)	ND	U	0.5	NS	--	--	NS	--	--	NS	--	--	NS	--	--	2.6		0.5
	Toluene Dioxygenase (TOD)	ND	U	4.8	NS	--	--	NS	--	--	NS	--	--	NS	--	--	ND	U	5.1
	Toluene Monooxygenase (RMO)	1670		4.8	NS	--	--	NS	--	--	NS	--	--	NS	--	--	592		5.1
	Toluene Monooxygenase 2 (RDEG)	634		4.8	NS	--	--	NS	--	--	NS	--	--	NS	--	--	694		5.1
	Total Eubacteria (EBAC)	5580000		4.8	NS	--	--	NS	--	--	NS	--	--	NS	--	--	1510000		5.1
	trans-1,2-DCE Reductase (TDR)	ND	U	4.8	NS	--	--	NS	--	--	NS	--	--	NS	--	--	ND	U	5.1
	Trichlorobenzene Dioxygenase (TCBO)	ND	U	4.8	NS	--	--	NS	--	--	NS	--	--	NS	--	--	ND	U	5.1
	Vinyl Chloride Reductase (VCR)	ND	U		NS	--	--	NS	--	--	NS	--	--	NS	--	--	ND	U	
EDB (µg/L) EPA Method 8011	1,2-DIBROMOETHANE	4.7		0.03	6.4		0.03	6.1		0.029	6.1		0.029	3.4		0.015	1.8		0.0059
Fluorometric (µg/L) Spectrofluorophotometry	FLUORESCEIN	NS	--	--	NS	--	--	NS	--	--	NS	--	--	NS	--	--	NS	--	--
Reduced Gases (µg/L) RSKSOP-175	ACETYLENE	ND	U	10	ND	U	10	ND	U	10	ND	U	10	ND	U	10	ND	U	10
	ETHANE	ND	U	4	ND	U	4	ND	U	4	ND	U	4	ND	U	4	ND	U	4
	ETHYLENE	9.6		5	6.4		5	8.7		5	11		5	17.5		5	17.5		5
	METHANE	23.7		2	15.5		2	21.7		2	39.6		2	102.3		2	244		2
	PROPANE	ND	U	6	ND	U	6	ND	U	6	ND	U	6	ND	U	6	0.9	J	6
General Chemistry (mg/L) SM2320b, EPA Method 300, EPA Method 353.2, SM4500 PE	ALKALINITY	380		5	400		5	390		5	400		5	410		5	420		5
	BROMIDE	1.1		0.5	0.98		0.5	0.87		0.5	0.94		0.5	1.8		0.5	1.2		0.5
	CHLORIDE	49		0.5	52		0.5	52		0.5	52		0.5	49		0.5	48		0.5
	IODIDE	4.4		0.75	5.3		0.75	5		0.75	7.4		0.75	11		0.75	12		0.75
	NITRATE	NS	--	--	NS	--	--	NS	--	--	NS	--	--	NS	--	--	NS	--	--
	NITRITE	NS	--	--	NS	--	--	NS	--	--	NS	--	--	NS	--	--	NS	--	--
	NITROGEN, NITRATE-NITRITE	ND		0.05	ND	U	0.05	ND	U	0.05	ND	U	0.05	ND	U	0.05	ND	U	0.05
	O-PHOSPHATE (AS P)	ND		0.15	ND	U	0.15	ND	U	0.15	ND	U	0.15	ND	U	0.15	ND	UJ	0.15
	SULFATE	2.9		1	ND	U	1	ND	U	1	ND	U	1	ND	U	1	ND	U	1
VFAs (mg/L) EPA Method 300m	ACETIC ACID	2.1		1	4.8		1	4.4		1	18.6		10	51.8		10	50.5		10
	BUTYRIC ACID	ND	U	1	ND	U	1	ND	U	1	ND	U	1	ND	U	1	ND	U	1
	FORMIC ACID	ND	U	1	ND	U	1	ND	U	1	ND	U	1	0.7	J	10	0.6	J	1
	LACTIC ACID	0.8	J	1	0.8	J	1	0.6	J	1	0.6	J	1	0.4	J	1	1	J	1
	PROPIONIC ACID	ND	U	1	ND	U	1	ND	U	1	ND	U	1	ND	U	1	ND	U	1
	PYRUVIC ACID	ND	U	1	ND	U	1	ND	U	1	ND	U	1	ND	U	1	ND	U	1
	VALERIC ACID	ND	U	1	ND	U	1	ND	U	1	ND	U	1	ND	U	1	ND	U	1

Table 7
Groundwater Analytical Results for KAFB-106063

	Phase Designation	Phase 3 Recirculation						Phase 3 Recirculation			Phase 3 Passive								
	Sample ID	106063-P3R-082218			106063-P3R-082918			106063-P3R-082918-FD			106063-P3P-091218			106063-P3P-100418			106063-P3P-111518		
	Sample Date	8/22/2018			8/29/2018			8/29/2018			9/12/2018			10/4/2018			11/15/2018		
	Sample Pupose	REG			REG			FD			REG			REG			REG		
Chemical Class and Analytical Method[a]	Parameter	Result	Val Qual	LOQ	Result	Val Qual	LOQ	Result	Val Qual	LOQ	Result	Val Qual	LOQ	Result	Val Qual	LOQ	Result	Val Qual	LOQ
Dissolved Metals (mg/L) EPA Method 6010	IRON	4.3		0.05	3.8		0.05	3.8		0.05	5		0.05	8		0.05	8.4		0.05
	MANGANESE	4.8		0.003	4.9		0.003	4.9		0.003	5.5		0.003	6.6		0.003	6.3		0.003
δ2H (0/00) Mass Spectrometry, USGS Reston, VA	DELTA2H	NS	--	--	NS	--	--	NS	--	--	NS	--	--	NS	--	--	NS	--	--
VOCs (µg/L) EPA Method 8260	1,1,2-TRICHLOROETHANE	ND	U	10	ND	U	0.5	ND	U	50	ND	U	50	ND	U	25	ND	U	50
	1,2,4-TRIMETHYLBENZENE	290		20	310		50	330		100	410		100	600		50	510		100
	1,2-DIBROMOETHANE	ND	U	20	8.4	J+	1	ND	U	100	ND	U	100	ND	U	50	ND	U	100
	1,2-DICHLOROETHANE	ND	U	20	3		1	ND	U	100	ND	U	100	ND	U	50	ND	U	100
	1,3,5-TRIMETHYLBENZENE	130		10	130	J+	0.5	140		50	150		50	210		25	190		50
	2-BUTANONE	ND	U	200	6.2	J+	10	ND	U	1000	ND	U	1000	ND	U	500	ND	U	1000
	2-CHLOROTOLUENE	ND	U	10	ND	U	0.5	ND	U	50	ND	U	50	ND	U	25	ND	U	50
	2-HEXANONE	ND	U	100	38	J+	5	ND	U	500	ND	U	500	100	J	250	ND	U	500
	4-METHYL-2-PENTANONE	68	J	100	63	J+	5	ND	U	500	ND	U	500	ND	U	250	ND	U	500
	ACETONE	ND	U	200	34	J+	10	ND	U	1000	ND	U	1000	ND	U	500	ND	U	1000
	BENZENE	2700		20	3000		50	3100		100	3500		100	6200		50	5200		100
	CARBON DISULFIDE	ND	U	40	ND	U	2	ND	U	200	ND	U	200	ND	U	100	ND	U	200
	CHLOROMETHANE	ND	U	20	ND	U	1	ND	U	100	ND	U	100	ND	U	50	ND	U	100
	DICHLORODIFLUOROMETHANE	ND	U	20	ND	U	1	ND	U	100	ND	U	100	ND	U	50	ND	U	100
	ETHYLBENZENE	1400		20	1500		50	1600		100	1600		100	2200		50	2100		100
	ISOPROPYLBENZENE	160		20	160	J+	1	160		100	170		100	220		50	200		100
	METHYL TERT-BUTYL ETHER	ND	U	10	0.48	J+	0.5	ND	U	50	ND	U	50	ND	U	25	ND	U	50
	METHYLENE CHLORIDE	ND	U	100	ND	U	5	270	J	500	ND	U	500	ND	U	250	ND	U	500
	NAPHTHALENE	120		100	140	J+	5	ND	U	500	ND	U	500	200	J	250	ND	U	500
VOCs (µg/L) EPA Method 8260	N-BUTYLBENZENE	19	J	20	20	J+	1	ND	U	100	ND	U	100	28	J	50	ND	U	100
	N-PROPYLBENZENE	110		20	110	J+	1	120		100	120		100	150		50	140		100
	P-ISOPROPYLTOLUENE	130		20	160	J+	1	140		100	120		100	110		50	73	J	100
	SEC-BUTYLBENZENE	19	J	20	18	J+	1	ND	U	100	ND	U	100	27	J	50	ND	U	100
	TERT-BUTYLBENZENE	ND	U	20	1.5	J+	1	ND	U	100	ND	U	100	ND	U	50	ND	U	100
	TOLUENE	4100		50	6700		50	6800		100	10000		100	18000		100	19000		200
	TRICHLOROETHENE	ND	U	20	ND	U	1	ND	U	100	ND	U	100	ND	U	50	ND	U	100
	TRICHLOROFLUOROMETHANE	ND	U	20	ND	U	1	ND	U	100	ND	U	100	ND	U	50	ND	U	100
	XYLENES	2600		10	3100		25	3200		50	3800		50	5900		25	6000		50

Notes:

a. EPA analytical methods listed are for the most recent sampling event.

b. Samples were collected using Geotech Bladder Pumps.

c. Samples were recollected (except for QuantArray-Chlor analysis) using replacement QED Bladder Pumps.

-- = Not applicable.

δ2H - Delta Deuterium.

0/00 - Per mille.

cells/mL = Cells per milliliter.

EPA = Environmental Protection Agency.

FD = Field duplicate.

ID = Identification.

J = Estimated value, concentration is less than LOQ but greater than laboratory method detection limit (DL).

J+ = Estimated value, concentration is less than LOQ but greater than laboratory method detection limit (DL); biased high.

J- = Estimated value, concentration is less than LOQ but greater than laboratory method detection limit (DL); biased low.

KAFB = Kirtland Air Force Base.

LOQ = Limit of Quantitation

µg/L = Microgram per liter.

mg/L = Milligram per liter.

ND = Not detected.

NS = Not sampled.

REG = Regular/parent sample.

U = Analyte was not detected. The reported numerical value is at or below the LOQ.

UJ = Analyte was not detected. The reported value is estimated.

VAL QUAL = Validation qualifier.

VFA - Volatile fatty acid.

VOC = Volatile organic compound.

Table 7
Groundwater Analytical Results for KAFB-106063

	Phase Designation	Phase 4 Passive		
	Sample ID	106063-P4P-011719		
	Sample Date	1/17/2019		
	Sample Pupose	REG		
Chemical Class and Analytical Method[a]	**Parameter**	**Result**	**Val Qual**	**LOQ**
Microbial Community (cells/mL) QuantArray-Chlor	1,1 DCA Reductase (DCA)	ND	U	5.3
	1,2 DCA Reductase (DCAR)	ND	U	5.3
	BAV1 Vinyl Chloride Reductase (BVC)	ND	U	0.5
	Chloroform Reductase (CFR)	ND	U	5.3
	Dehalobacter DCM (DCM)	ND	U	5.3
	Dehalobacter spp. (DHBt)	376000		5.3
	Dehalobium chlorocoercia (DECO)	3370		5.3
	Dehalococcoides (DHC)	0.6		0.5
	Dehalogenimonas spp. (DHG)	ND	U	5.3
	Desulfitobacterium spp. (DSB)	91800		5.3
	Desulfuromonas spp. (DSM)	20		5.3
	Dichloromethane Dehalogenase (DCMA)	ND	U	5.3
	Epoxyalkane Transferase (EtnE)	ND	U	5.3
	Ethene Monooxygenase (EtnC)	ND	U	5.3
	Methanogens (MGN)	1060		5.3
	PCE Reductase (PCE-1)	ND	U	5.3
	Phenol Hydroxylase (PHE)	1360		5.3
	PMMO	NS	--	--
	Soluble Methane Monooxygenase (SMMO)	1960		5.3
	Sulfate Reducing Bacteria (APS)	142000		5.3
	tceA Reductase (TCE)	ND	U	5.3
	Toluene Dioxygenase (TOD)	ND	U	5.3
	Toluene Monooxygenase (RMO)	8780		5.3
	Toluene Monooxygenase 2 (RDEG)	3180		5.3
	Total Eubacteria (EBAC)	19600000		5.3
	trans-1,2-DCE Reductase (TDR)	ND	U	5.3
	Trichlorobenzene Dioxygenase (TCBO)	ND	U	5.3
	Vinyl Chloride Reductase (VCR)	ND	U	0.5
EDB (µg/L) EPA Method 8011	1,2-DIBROMOETHANE	0.84		0.0031
Fluorometric (µg/L) Spectrofluorophotometry	FLUORESCEIN	NS	--	--
Reduced Gases (µg/L) RSKSOP-175	ACETYLENE	ND		10
	ETHANE	ND		4
	ETHYLENE	16.2		5
	METHANE	777.8		2
	PROPANE	ND		6
General Chemistry (mg/L) SM2320b, EPA Method 300, EPA Method 353.2, SM4500 PE	ALKALINITY	430		5
	BROMIDE	0.73		0.5
	CHLORIDE	48		0.5
	IODIDE	12		1.5
	NITRATE	NS	--	--
	NITRITE	NS	--	--
	NITROGEN, NITRATE-NITRITE	ND		0.05
	O-PHOSPHATE (AS P)	ND		0.15
	SULFATE	ND		1
VFAs (mg/L) EPA Method 300m	ACETIC ACID	39.9		10
	BUTYRIC ACID	ND		1
	FORMIC ACID	0.3		1
	LACTIC ACID	0.5		1
	PROPIONIC ACID	ND		1
	PYRUVIC ACID	ND		1
	VALERIC ACID	ND		1

Table 7
Groundwater Analytical Results for KAFB-106063

	Phase Designation	Phase 4 Passive		
	Sample ID	106063-P4P-011719		
	Sample Date	1/17/2019		
	Sample Pupose	REG		
Chemical Class and Analytical Method[a]	**Parameter**	**Result**	**Val Qual**	**LOQ**
Dissolved Metals (mg/L) EPA Method 6010	IRON	7.3		0.05
	MANGANESE	5.5		0.003
δ2H (0/00) Mass Spectrometry, USGS Reston, VA	DELTA2H	NS	--	--
VOCs (µg/L) EPA Method 8260	1,1,2-TRICHLOROETHANE	ND		500
	1,2,4-TRIMETHYLBENZENE	520		1000
	1,2-DIBROMOETHANE	ND		1000
	1,2-DICHLOROETHANE	NA	--	--
	1,3,5-TRIMETHYLBENZENE	ND		500
	2-BUTANONE	ND		10000
	2-CHLOROTOLUENE	ND		500
	2-HEXANONE	ND		5000
	4-METHYL-2-PENTANONE	ND		5000
	ACETONE	ND		10000
	BENZENE	5000		1000
	CARBON DISULFIDE	ND		2000
	CHLOROMETHANE	ND		1000
	DICHLORODIFLUOROMETHANE	NA	--	--
	ETHYLBENZENE	NA	--	--
	ISOPROPYLBENZENE	ND		1000
	METHYL TERT-BUTYL ETHER	ND		500
	METHYLENE CHLORIDE	ND		5000
	NAPHTHALENE	ND		5000
VOCs (µg/L) EPA Method 8260	N-BUTYLBENZENE	ND		1000
	N-PROPYLBENZENE	ND		1000
	P-ISOPROPYLTOLUENE	ND		1000
	SEC-BUTYLBENZENE	ND		1000
	TERT-BUTYLBENZENE	ND		1000
	TOLUENE	16000		1000
	TRICHLOROETHENE	ND		1000
	TRICHLOROFLUOROMETHANE	ND		1000
	XYLENES	5200		500

Notes:

a. EPA analytical methods listed are for the most recent sampling event.

b. Samples were collected using Geotech Bladder Pumps.

c. Samples were recollected (except for QuantArray-Chlor analysis) using replacement QED Bladder Pumps.

-- = Not applicable.

δ2H - Delta Deuterium.

0/00 - Per mille.

cells/mL = Cells per milliliter.

EPA = Environmental Protection Agency.

FD = Field duplicate.

ID = Identification.

J = Estimated value, concentration is less than LOQ but greater than laboratory method detection limit (DL).

J+ = Estimated value, concentration is less than LOQ but greater than laboratory method detection limit (DL); biased high.

J- = Estimated value, concentration is less than LOQ but greater than laboratory method detection limit (DL); biased low.

KAFB = Kirtland Air Force Base.

LOQ = Limit of Quantitation

µg/L = Microgram per liter.

mg/L = Milligram per liter.

ND = Not detected.

NS = Not sampled.

REG = Regular/parent sample.

U = Analyte was not detected. The reported numerical value is at or below the LOQ.

UJ = Analyte was not detected. The reported value is estimated.

VAL QUAL = Validation qualifier.

VFA - Volatile fatty acid.

VOC = Volatile organic compound.

Table 8
Groundwater Analytical Results for KAFB-106064

	Phase Designation	Original Baseline[b]			New Baseline - QED Pumps[c]			Phase 1 Recirculation			Phase 1 Recirculation					
	Sample ID	106064-BL-081617			106064-BL-091917			106064-P1R-100417			106064-P1R-100417-FD			106064-P1R-100617		
	Sample Date	8/16/2017			9/19/2017			10/4/2017			10/4/2017			10/6/2017		
	Sample Pupose	REG			REG			REG			FD			REG		
Chemical Class and Analytical Method[a]	Parameter	Result	Val Qual	LOQ	Result	Val Qual	LOQ	Result	Val Qual	LOQ	Result	Val Qual	LOQ	Result	Val Qual	LOQ
Microbial Community (cells/mL) QuantArray-Chlor	1,1 DCA Reductase (DCA)	ND	U	6.2	NS	--	--	NS	--	--	NS	--	--	NS	--	--
	1,2 DCA Reductase (DCAR)	ND	U	6.2	NS	--	--	NS	--	--	NS	--	--	NS	--	--
	BAV1 Vinyl Chloride Reductase (BVC)	ND	U	0.6	NS	--	--	NS	--	--	NS	--	--	NS	--	--
	Chloroform Reductase (CFR)	ND	U	6.2	NS	--	--	NS	--	--	NS	--	--	NS	--	--
	Dehalobacter DCM (DCM)	ND	U	6.2	NS	--	--	NS	--	--	NS	--	--	NS	--	--
	Dehalobacter spp. (DHBt)	42500		6.2	NS	--	--	NS	--	--	NS	--	--	NS	--	--
	Dehalobium chlorocoercia (DECO)	6400		6.2	NS	--	--	NS	--	--	NS	--	--	NS	--	--
	Dehalococcoides (DHC)	ND	U	0.6	NS	--	--	NS	--	--	NS	--	--	NS	--	--
	Dehalogenimonas spp. (DHG)	ND	U	6.2	NS	--	--	NS	--	--	NS	--	--	NS	--	--
	Desulfitobacterium spp. (DSB)	28200		6.2	NS	--	--	NS	--	--	NS	--	--	NS	--	--
	Desulfuromonas spp. (DSM)	4890		6.2	NS	--	--	NS	--	--	NS	--	--	NS	--	--
	Dichloromethane Dehalogenase (DCMA)	ND	U	6.2	NS	--	--	NS	--	--	NS	--	--	NS	--	--
	Epoxyalkane Transferase (EtnE)	ND	U	6.2	NS	--	--	NS	--	--	NS	--	--	NS	--	--
	Ethene Monooxygenase (EtnC)	ND	U	6.2	NS	--	--	NS	--	--	NS	--	--	NS	--	--
	Methanogens (MGN)	45.3		6.2	NS	--	--	NS	--	--	NS	--	--	NS	--	--
	PCE Reductase (PCE-1)	NS	--	--	NS	--	--	NS	--	--	NS	--	--	NS	--	--
	Phenol Hydroxylase (PHE)	19200		6.2	NS	--	--	NS	--	--	NS	--	--	NS	--	--
	PMMO	ND	U	6.2	NS	--	--	NS	--	--	NS	--	--	NS	--	--
	Soluble Methane Monooxygenase (SMMO)	32.3		6.2	NS	--	--	NS	--	--	NS	--	--	NS	--	--
	Sulfate Reducing Bacteria (APS)	147000		6.2	NS	--	--	NS	--	--	NS	--	--	NS	--	--
	tceA Reductase (TCE)	ND	U	0.6	NS	--	--	NS	--	--	NS	--	--	NS	--	--
	Toluene Dioxygenase (TOD)	8.3		6.2	NS	--	--	NS	--	--	NS	--	--	NS	--	--
	Toluene Monooxygenase (RMO)	11500		6.2	NS	--	--	NS	--	--	NS	--	--	NS	--	--
	Toluene Monooxygenase 2 (RDEG)	11400		6.2	NS	--	--	NS	--	--	NS	--	--	NS	--	--
	Total Eubacteria (EBAC)	356000		6.2	NS	--	--	NS	--	--	NS	--	--	NS	--	--
	trans-1,2-DCE Reductase (TDR)	NS	--	--	NS	--	--	NS	--	--	NS	--	--	NS	--	--
	Trichlorobenzene Dioxygenase (TCBO)	ND	U	6.2	NS	--	--	NS	--	--	NS	--	--	NS	--	--
	Vinyl Chloride Reductase (VCR)	ND	U	0.6	NS	--	--	NS	--	--	NS	--	--	NS	--	--
EDB (µg/L) EPA Method 8011	1,2-DIBROMOETHANE	6.27		0.385	143	J+	9.67	NS	--	--	NS	--	--	NS	--	--
Fluorometric (µg/L) Spectrofluorophotometry	FLUORESCEIN	ND	U	0.01	ND	U	0.01	ND	U	0.01	ND	U	0.01	144.5		0.01
Reduced Gases (µg/L) RSKSOP-175	ACETYLENE	ND	U	10	ND	U	10	NS	--	--	NS	--	--	NS	--	--
	ETHANE	ND	U	4	1.65	J	4	NS	--	--	NS	--	--	NS	--	--
	ETHYLENE	1.09	J	5	17.8		5	NS	--	--	NS	--	--	NS	--	--
	METHANE	26		2	179		2	NS	--	--	NS	--	--	NS	--	--
	PROPANE	ND	U	6	2.14	J	6	NS	--	--	NS	--	--	NS	--	--
General Chemistry (mg/L) SM2320b, EPA Method 300, EPA Method 353.2, SM4500 PE	ALKALINITY	200		1	354		1	NS	--	--	NS	--	--	NS	--	--
	BROMIDE	0.159		0.125	0.283		0.125	NS	--	--	NS	--	--	NS	--	--
	CHLORIDE	11.5		0.33	13		0.33	NS	--	--	NS	--	--	NS	--	--
	IODIDE	ND	U	0.2	ND	U	0.75	NS	--	--	NS	--	--	NS	--	--
	NITRATE	NS	--	--	NS	--	--	NS	--	--	NS	--	--	NS	--	--
	NITRITE	NS	--	--	NS	--	--	NS	--	--	NS	--	--	NS	--	--
	NITROGEN, NITRATE-NITRITE	ND	U	0.375	ND	U	0.375	NS	--	--	NS	--	--	NS	--	--
	O-PHOSPHATE (AS P)	0.0109		0.02	ND	U	0.02	NS	--	--	NS	--	--	NS	--	--
	SULFATE	11.7		1	ND	U	1	NS	--	--	NS	--	--	NS	--	--

Table 8
Groundwater Analytical Results for KAFB-106064

	Phase Designation	Original Baseline[b]			New Baseline - QED Pumps[c]			Phase 1 Recirculation			Phase 1 Recirculation					
	Sample ID	106064-BL-081617			106064-BL-091917			106064-P1R-100417			106064-P1R-100417-FD			106064-P1R-100617		
	Sample Date	8/16/2017			9/19/2017			10/4/2017			10/4/2017			10/6/2017		
	Sample Pupose	REG			REG			REG			FD			REG		
Chemical Class and Analytical Method[a]	Parameter	Result	Val Qual	LOQ	Result	Val Qual	LOQ	Result	Val Qual	LOQ	Result	Val Qual	LOQ	Result	Val Qual	LOQ
VFAs (mg/L) EPA Method 300m	ACETIC ACID	ND	U	1	15.7		1	NS	--	--	NS	--	--	NS	--	--
	BUTYRIC ACID	ND	U	1	ND	U	1	NS	--	--	NS	--	--	NS	--	--
	FORMIC ACID	ND	U	1	ND	U	1	NS	--	--	NS	--	--	NS	--	--
	LACTIC ACID	ND	U	1	0.51	J	1	NS	--	--	NS	--	--	NS	--	--
	PROPIONIC ACID	ND	U	1	1.46		1	NS	--	--	NS	--	--	NS	--	--
	PYRUVIC ACID	ND	U	1	ND	U	1	NS	--	--	NS	--	--	NS	--	--
	VALERIC ACID	ND	U	1	ND	U	1	NS	--	--	NS	--	--	NS	--	--
Dissolved Metals (mg/L) EPA Method 6010	IRON	0.315	J	0.06	2.62		0.06	NS	--	--	NS	--	--	NS	--	--
	MANGANESE	1.21	J-	0.006	2.13		0.006	NS	--	--	NS	--	--	NS	--	--
δ2H (‰) Mass Spectrometry, USGS Reston, VA	DELTA2H	-95.99		-99	-94.52		-99	-93.39		-99	-94.11		-99	123.55		-99
CSIA EDB δ13C ‰) Kuder et al, 2012	EDB δ	NA	--	--	-11.4 ±2‰	--	--	NS	--	--	NS	--	--	NS	--	--
VOCs (µg/L) EPA Method 8260	1,1,2-TRICHLOROETHANE	ND	U	1.25	ND	U	50	NS	--	--	NS	--	--	NS	--	--
	1,2,4-TRIMETHYLBENZENE	12.7		1.25	141		50	NS	--	--	NS	--	--	NS	--	--
	1,2-DIBROMOETHANE	9.65		1.25	148		50	NS	--	--	NS	--	--	NS	--	--
	1,2-DICHLOROETHANE	2.22	J	1.25	ND	U	50	NS	--	--	NS	--	--	NS	--	--
	1,3,5-TRIMETHYLBENZENE	ND	U	1.25	37.5	J	50	NS	--	--	NS	--	--	NS	--	--
	2-BUTANONE	ND	U	12.5	ND	U	500	NS	--	--	NS	--	--	NS	--	--
	2-CHLOROTOLUENE	ND	U	1.25	ND	U	50	NS	--	--	NS	--	--	NS	--	--
	2-HEXANONE	ND	U	6.25	ND	U	250	NS	--	--	NS	--	--	NS	--	--
	4-METHYL-2-PENTANONE	5.28	J	6.25	ND	U	250	NS	--	--	NS	--	--	NS	--	--
	ACETONE	13.7	J+	12.5	ND	U	500	NS	--	--	NS	--	--	NS	--	--
	BENZENE	301		1.25	4730		50	NS	--	--	NS	--	--	NS	--	--
	CARBON DISULFIDE	ND	U	1.25	ND	U	50	NS	--	--	NS	--	--	NS	--	--
	CHLOROMETHANE	ND	U	1.25	ND	U	50	NS	--	--	NS	--	--	NS	--	--
	DICHLORODIFLUOROMETHANE	ND	U	2.5	ND	U	100	NS	--	--	NS	--	--	NS	--	--
	ETHYLBENZENE	41.9		1.25	577		50	NS	--	--	NS	--	--	NS	--	--
	ISOPROPYLBENZENE	6.16		1.25	51.5	J	50	NS	--	--	NS	--	--	NS	--	--
	METHYL TERT-BUTYL ETHER	0.717	J	1.25	ND	U	50	NS	--	--	NS	--	--	NS	--	--
	METHYLENE CHLORIDE	ND	U	2.5	ND	U	100	NS	--	--	NS	--	--	NS	--	--
	NAPHTHALENE	4.96		1.25	56.2	J	50	NS	--	--	NS	--	--	NS	--	--
	N-BUTYLBENZENE	0.795	J	1.25	ND	U	50	NS	--	--	NS	--	--	NS	--	--
	N-PROPYLBENZENE	5.85		1.25	37.8	J	50	NS	--	--	NS	--	--	NS	--	--
	P-ISOPROPYLTOLUENE	5.06		1.25	31.8	J	50	NS	--	--	NS	--	--	NS	--	--
	SEC-BUTYLBENZENE	1.61	J	1.25	ND	U	50	NS	--	--	NS	--	--	NS	--	--
	TERT-BUTYLBENZENE	ND	U	1.25	ND	U	50	NS	--	--	NS	--	--	NS	--	--
	TOLUENE	92.6		1.25	7330		50	NS	--	--	NS	--	--	NS	--	--
	TRICHLOROETHENE	ND	U	1.25	ND	U	50	NS	--	--	NS	--	--	NS	--	--
	TRICHLOROFLUOROMETHANE	ND	U	2.5	ND	U	100	NS	--	--	NS	--	--	NS	--	--
	XYLENES	66		3.75	2010		150	NS	--	--	NS	--	--	NS	--	--

Notes:

a. EPA analytical methods listed are for the most recent sampling event.

b. Samples were collected using Geotech Bladder Pumps.

c. Samples were recollected (except for QuantArray-Chlor analysis) using replacement QED Bladder Pumps.

-- = Not applicable.

δ2H - Delta Deuterium.

0/00 - Per mille.

cells/mL = Cells per milliliter.

EPA = Environmental Protection Agency.

FD = Field duplicate.

ID = Identification.

J = Estimated value, concentration is less than LOQ but greater than laboratory method detection limit (DL).

J+ = Estimated value, concentration is less than LOQ but greater than laboratory method detection limit (DL); biased high.

J- = Estimated value, concentration is less than LOQ but greater than laboratory method detection limit (DL); biased low.

KAFB = Kirtland Air Force Base.

LOQ = Limit of Quantitation

µg/L = Microgram per liter.

mg/L = Milligram per liter.

NA = Not analyzed.

ND = Not detected.

NS = Not sampled.

REG = Regular/parent sample.

U = Analyte was not detected. The reported numerical value is at or below the LOQ.

UJ = Analyte was not detected. The reported value is estimated.

VAL QUAL = Validation qualifier.

VFA - Volatile fatty acid.

VOC = Volatile organic compound.

Table 8
Groundwater Analytical Results for KAFB-106064

	Phase Designation	Phase 1 Recirculation						Phase 1 Recirculation											
	Sample ID	106064-P1R-100917			106064-P1R-101217			106064-P1R-101617			106064-P1R-102017			106064-P1R-102417			106064-P1R-110117		
	Sample Date	10/9/2017			10/12/2017			10/16/2017			10/20/2017			10/24/2017			11/1/2017		
	Sample Pupose	REG			REG			REG			REG			REG			REG		
Chemical Class and Analytical Method[a]	Parameter	Result	Val Qual	LOQ	Result	Val Qual	LOQ	Result	Val Qual	LOQ	Result	Val Qual	LOQ	Result	Val Qual	LOQ	Result	Val Qual	LOQ
Microbial Community (cells/mL) QuantArray-Chlor	1,1 DCA Reductase (DCA)	NS	--	--	NS	--	--	NS	--	--	NS	--	--	NS	--	--	NS	--	--
	1,2 DCA Reductase (DCAR)	NS	--	--	NS	--	--	NS	--	--	NS	--	--	NS	--	--	NS	--	--
	BAV1 Vinyl Chloride Reductase (BVC)	NS	--	--	NS	--	--	NS	--	--	NS	--	--	NS	--	--	NS	--	--
	Chloroform Reductase (CFR)	NS	--	--	NS	--	--	NS	--	--	NS	--	--	NS	--	--	NS	--	--
	Dehalobacter DCM (DCM)	NS	--	--	NS	--	--	NS	--	--	NS	--	--	NS	--	--	NS	--	--
	Dehalobacter spp. (DHBt)	NS	--	--	NS	--	--	NS	--	--	NS	--	--	NS	--	--	NS	--	--
	Dehalobium chlorocoercia (DECO)	NS	--	--	NS	--	--	NS	--	--	NS	--	--	NS	--	--	NS	--	--
	Dehalococcoides (DHC)	NS	--	--	NS	--	--	NS	--	--	NS	--	--	NS	--	--	NS	--	--
	Dehalogenimonas spp. (DHG)	NS	--	--	NS	--	--	NS	--	--	NS	--	--	NS	--	--	NS	--	--
	Desulfitobacterium spp. (DSB)	NS	--	--	NS	--	--	NS	--	--	NS	--	--	NS	--	--	NS	--	--
	Desulfuromonas spp. (DSM)	NS	--	--	NS	--	--	NS	--	--	NS	--	--	NS	--	--	NS	--	--
	Dichloromethane Dehalogenase (DCMA)	NS	--	--	NS	--	--	NS	--	--	NS	--	--	NS	--	--	NS	--	--
	Epoxyalkane Transferase (EtnE)	NS	--	--	NS	--	--	NS	--	--	NS	--	--	NS	--	--	NS	--	--
	Ethene Monooxygenase (EtnC)	NS	--	--	NS	--	--	NS	--	--	NS	--	--	NS	--	--	NS	--	--
	Methanogens (MGN)	NS	--	--	NS	--	--	NS	--	--	NS	--	--	NS	--	--	NS	--	--
	PCE Reductase (PCE-1)	NS	--	--	NS	--	--	NS	--	--	NS	--	--	NS	--	--	NS	--	--
	Phenol Hydroxylase (PHE)	NS	--	--	NS	--	--	NS	--	--	NS	--	--	NS	--	--	NS	--	--
	PMMO	NS	--	--	NS	--	--	NS	--	--	NS	--	--	NS	--	--	NS	--	--
	Soluble Methane Monooxygenase (SMMO)	NS	--	--	NS	--	--	NS	--	--	NS	--	--	NS	--	--	NS	--	--
	Sulfate Reducing Bacteria (APS)	NS	--	--	NS	--	--	NS	--	--	NS	--	--	NS	--	--	NS	--	--
	tceA Reductase (TCE)	NS	--	--	NS	--	--	NS	--	--	NS	--	--	NS	--	--	NS	--	--
	Toluene Dioxygenase (TOD)	NS	--	--	NS	--	--	NS	--	--	NS	--	--	NS	--	--	NS	--	--
	Toluene Monooxygenase (RMO)	NS	--	--	NS	--	--	NS	--	--	NS	--	--	NS	--	--	NS	--	--
	Toluene Monooxygenase 2 (RDEG)	NS	--	--	NS	--	--	NS	--	--	NS	--	--	NS	--	--	NS	--	--
	Total Eubacteria (EBAC)	NS	--	--	NS	--	--	NS	--	--	NS	--	--	NS	--	--	NS	--	--
	trans-1,2-DCE Reductase (TDR)	NS	--	--	NS	--	--	NS	--	--	NS	--	--	NS	--	--	NS	--	--
	Trichlorobenzene Dioxygenase (TCBO)	NS	--	--	NS	--	--	NS	--	--	NS	--	--	NS	--	--	NS	--	--
	Vinyl Chloride Reductase (VCR)	NS	--	--	NS	--	--	NS	--	--	NS	--	--	NS	--	--	NS	--	--
EDB (µg/L) EPA Method 8011	1,2-DIBROMOETHANE	NS	--	--	NS	--	--	NS	--	--	NS	--	--	76		1.9	NS	--	--
Fluorometric (µg/L) Spectrofluorophotometry	FLUORESCEIN	33.529		0.01	9.946		0.01	2.504		0.01	3.289		0.01	4.128		0.01	6.553		0.01
Reduced Gases (µg/L) RSKSOP-175	ACETYLENE	NS	--	--	NS	--	--	NS	--	--	NS	--	--	ND	U	10	NS	--	--
	ETHANE	NS	--	--	NS	--	--	NS	--	--	NS	--	--	ND	U	4	NS	--	--
	ETHYLENE	NS	--	--	NS	--	--	NS	--	--	NS	--	--	3.18	J	5	NS	--	--
	METHANE	NS	--	--	NS	--	--	NS	--	--	NS	--	--	1.9	J	2	NS	--	--
	PROPANE	NS	--	--	NS	--	--	NS	--	--	NS	--	--	ND	U	6	NS	--	--
General Chemistry (mg/L) SM2320b, EPA Method 300, EPA Method 353.2, SM4500 PE	ALKALINITY	NS	--	--	NS	--	--	NS	--	--	NS	--	--	317		1	NS	--	--
	BROMIDE	NS	--	--	NS	--	--	NS	--	--	NS	--	--	0.53		0.125	NS	--	--
	CHLORIDE	NS	--	--	NS	--	--	NS	--	--	NS	--	--	44.5		0.33	NS	--	--
	IODIDE	NS	--	--	NS	--	--	NS	--	--	NS	--	--	ND	U	0.75	NS	--	--
	NITRATE	NS	--	--	NS	--	--	NS	--	--	NS	--	--	NS	--	--	NS	--	--
	NITRITE	NS	--	--	NS	--	--	NS	--	--	NS	--	--	NS	--	--	NS	--	--
	NITROGEN, NITRATE-NITRITE	NS	--	--	NS	--	--	NS	--	--	NS	--	--	ND	U	0.375	NS	--	--
	O-PHOSPHATE (AS P)	NS	--	--	NS	--	--	NS	--	--	NS	--	--	ND	U	0.02	NS	--	--
	SULFATE	NS	--	--	NS	--	--	NS	--	--	NS	--	--	13.8		1	NS	--	--

Table 8
Groundwater Analytical Results for KAFB-106064

	Phase Designation	Phase 1 Recirculation						Phase 1 Recirculation											
	Sample ID	106064-P1R-100917			106064-P1R-101217			106064-P1R-101617			106064-P1R-102017			106064-P1R-102417			106064-P1R-110117		
	Sample Date	10/9/2017			10/12/2017			10/16/2017			10/20/2017			10/24/2017			11/1/2017		
	Sample Pupose	REG			REG			REG			REG			REG			REG		
Chemical Class and Analytical Method[a]	Parameter	Result	Val Qual	LOQ	Result	Val Qual	LOQ	Result	Val Qual	LOQ	Result	Val Qual	LOQ	Result	Val Qual	LOQ	Result	Val Qual	LOQ
VFAs (mg/L) EPA Method 300m	ACETIC ACID	NS	--	--	NS	--	--	NS	--	--	NS	--	--	5.7	U	1	NS	--	--
	BUTYRIC ACID	NS	--	--	NS	--	--	NS	--	--	NS	--	--	ND	U	1	NS	--	--
	FORMIC ACID	NS	--	--	NS	--	--	NS	--	--	NS	--	--	ND	U	1	NS	--	--
	LACTIC ACID	NS	--	--	NS	--	--	NS	--	--	NS	--	--	ND	U	1	NS	--	--
	PROPIONIC ACID	NS	--	--	NS	--	--	NS	--	--	NS	--	--	ND	U	1	NS	--	--
	PYRUVIC ACID	NS	--	--	NS	--	--	NS	--	--	NS	--	--	ND	U	1	NS	--	--
	VALERIC ACID	NS	--	--	NS	--	--	NS	--	--	NS	--	--	ND	U	1	NS	--	--
Dissolved Metals (mg/L) EPA Method 6010	IRON	NS	--	--	NS	--	--	NS	--	--	NS	--	--	0.689		0.06	NS	--	--
	MANGANESE	NS	--	--	NS	--	--	NS	--	--	NS	--	--	2.11		0.006	NS	--	--
δ2H (‰) Mass Spectrometry, USGS Reston, VA	DELTA2H	-56.22		-99	-80.18		-99	-91.39		-99	-90.18		-99	-90.67		-99	-85.04		-99
CSIA EDB δ13C ‰) Kuder et al, 2012	EDB δ	NS	--	--	NS	--	--	NS	--	--	NS	--	--	NS	--	--	NS	--	--
VOCs (µg/L) EPA Method 8260	1,1,2-TRICHLOROETHANE	NS	--	--	NS	--	--	NS	--	--	NS	--	--	ND	U	50	NS	--	--
	1,2,4-TRIMETHYLBENZENE	NS	--	--	NS	--	--	NS	--	--	NS	--	--	350		50	NS	--	--
	1,2-DIBROMOETHANE	NS	--	--	NS	--	--	NS	--	--	NS	--	--	76.7	J	50	NS	--	--
	1,2-DICHLOROETHANE	NS	--	--	NS	--	--	NS	--	--	NS	--	--	ND	U	50	NS	--	--
	1,3,5-TRIMETHYLBENZENE	NS	--	--	NS	--	--	NS	--	--	NS	--	--	111		50	NS	--	--
	2-BUTANONE	NS	--	--	NS	--	--	NS	--	--	NS	--	--	ND	U	500	NS	--	--
	2-CHLOROTOLUENE	NS	--	--	NS	--	--	NS	--	--	NS	--	--	ND	U	50	NS	--	--
	2-HEXANONE	NS	--	--	NS	--	--	NS	--	--	NS	--	--	170	J	250	NS	--	--
	4-METHYL-2-PENTANONE	NS	--	--	NS	--	--	NS	--	--	NS	--	--	ND	U	250	NS	--	--
	ACETONE	NS	--	--	NS	--	--	NS	--	--	NS	--	--	ND	U	500	NS	--	--
	BENZENE	NS	--	--	NS	--	--	NS	--	--	NS	--	--	3140		50	NS	--	--
	CARBON DISULFIDE	NS	--	--	NS	--	--	NS	--	--	NS	--	--	ND	U	50	NS	--	--
	CHLOROMETHANE	NS	--	--	NS	--	--	NS	--	--	NS	--	--	ND	U	50	NS	--	--
	DICHLORODIFLUOROMETHANE	NS	--	--	NS	--	--	NS	--	--	NS	--	--	ND	U	100	NS	--	--
	ETHYLBENZENE	NS	--	--	NS	--	--	NS	--	--	NS	--	--	894		50	NS	--	--
	ISOPROPYLBENZENE	NS	--	--	NS	--	--	NS	--	--	NS	--	--	77.9	J	50	NS	--	--
	METHYL TERT-BUTYL ETHER	NS	--	--	NS	--	--	NS	--	--	NS	--	--	ND	U	50	NS	--	--
	METHYLENE CHLORIDE	NS	--	--	NS	--	--	NS	--	--	NS	--	--	ND	U	100	NS	--	--
	NAPHTHALENE	NS	--	--	NS	--	--	NS	--	--	NS	--	--	105		50	NS	--	--
	N-BUTYLBENZENE	NS	--	--	NS	--	--	NS	--	--	NS	--	--	ND	U	50	NS	--	--
	N-PROPYLBENZENE	NS	--	--	NS	--	--	NS	--	--	NS	--	--	72.7	J	50	NS	--	--
	P-ISOPROPYLTOLUENE	NS	--	--	NS	--	--	NS	--	--	NS	--	--	51.2	J	50	NS	--	--
	SEC-BUTYLBENZENE	NS	--	--	NS	--	--	NS	--	--	NS	--	--	ND	U	50	NS	--	--
	TERT-BUTYLBENZENE	NS	--	--	NS	--	--	NS	--	--	NS	--	--	ND	U	50	NS	--	--
	TOLUENE	NS	--	--	NS	--	--	NS	--	--	NS	--	--	7540		50	NS	--	--
	TRICHLOROETHENE	NS	--	--	NS	--	--	NS	--	--	NS	--	--	ND	U	50	NS	--	--
	TRICHLOROFLUOROMETHANE	NS	--	--	NS	--	--	NS	--	--	NS	--	--	ND	U	100	NS	--	--
	XYLENES	NS	--	--	NS	--	--	NS	--	--	NS	--	--	3350		150	NS	--	--

Notes:

a. EPA analytical methods listed are for the most recent sampling event.

b. Samples were collected using Geotech Bladder Pumps.

c. Samples were recollected (except for QuantArray-Chlor analysis) using replacement QED Bladder Pumps.

-- = Not applicable.

δ2H - Delta Deuterium.

0/00 - Per mille.

cells/mL = Cells per milliliter.

EPA = Environmental Protection Agency.

FD = Field duplicate.

ID = Identification.

J = Estimated value, concentration is less than LOQ but greater than laboratory method detection limit (DL).

J+ = Estimated value, concentration is less than LOQ but greater than laboratory method detection limit (DL); biased high.

J- = Estimated value, concentration is less than LOQ but greater than laboratory method detection limit (DL); biased low.

KAFB = Kirtland Air Force Base.

LOQ = Limit of Quantitation

µg/L = Microgram per liter.

mg/L = Milligram per liter.

NA = Not analyzed.

ND = Not detected.

NS = Not sampled.

REG = Regular/parent sample.

U = Analyte was not detected. The reported numerical value is at or below the LOQ.

UJ = Analyte was not detected. The reported value is estimated.

VAL QUAL = Validation qualifier.

VFA - Volatile fatty acid.

VOC = Volatile organic compound.

Table 8
Groundwater Analytical Results for KAFB-106064

	Phase Designation	Phase 1 Passive						Phase 2 Recirculation						Phase 2 Recirculation		
	Sample ID	106064-P1P-111517			106064-P1P-112817			106064-P2R-011018			106064-P2R-011818			106064-P2R-012518		
	Sample Date	11/15/2017			11/28/2017			1/10/2018			1/18/2018			1/25/2018		
	Sample Pupose	REG			REG			REG			REG			REG		
Chemical Class and Analytical Method[a]	Parameter	Result	Val Qual	LOQ	Result	Val Qual	LOQ	Result	Val Qual	LOQ	Result	Val Qual	LOQ	Result	Val Qual	LOQ
Microbial Community (cells/mL) QuantArray-Chlor	1,1 DCA Reductase (DCA)	NS	--	--	ND	U	4.9	NS	--	--	NS	--	--	ND	U	10.4
	1,2 DCA Reductase (DCAR)	NS	--	--	ND	U	4.9	NS	--	--	NS	--	--	ND	U	10.4
	BAV1 Vinyl Chloride Reductase (BVC)	NS	--	--	ND	U	0.5	NS	--	--	NS	--	--	ND	U	1
	Chloroform Reductase (CFR)	NS	--	--	ND	U	4.9	NS	--	--	NS	--	--	ND	U	10.4
	Dehalobacter DCM (DCM)	NS	--	--	ND	U	4.9	NS	--	--	NS	--	--	ND	U	10.4
	Dehalobacter spp. (DHBt)	NS	--	--	84200		4.9	NS	--	--	NS	--	--	119000		10.4
	Dehalobium chlorocoercia (DECO)	NS	--	--	4520		4.9	NS	--	--	NS	--	--	23600		10.4
	Dehalococcoides (DHC)	NS	--	--	0.6		0.5	NS	--	--	NS	--	--	ND	U	1
	Dehalogenimonas spp. (DHG)	NS	--	--	ND	U	4.9	NS	--	--	NS	--	--	ND	U	10.4
	Desulfitobacterium spp. (DSB)	NS	--	--	103000		4.9	NS	--	--	NS	--	--	89700		10.4
	Desulfuromonas spp. (DSM)	NS	--	--	5		4.9	NS	--	--	NS	--	--	10.7		10.4
	Dichloromethane Dehalogenase (DCMA)	NS	--	--	ND	U	4.9	NS	--	--	NS	--	--	ND	U	10.4
	Epoxyalkane Transferase (EtnE)	NS	--	--	ND	U	4.9	NS	--	--	NS	--	--	ND	U	10.4
	Ethene Monooxygenase (EtnC)	NS	--	--	ND	U	4.9	NS	--	--	NS	--	--	ND	U	10.4
	Methanogens (MGN)	NS	--	--	75.4		4.9	NS	--	--	NS	--	--	228		10.4
	PCE Reductase (PCE-1)	NS	--	--	NS	--	--	NS	--	--	NS	--	--	4.3	J	10.4
	Phenol Hydroxylase (PHE)	NS	--	--	6760		4.9	NS	--	--	NS	--	--	17400		10.4
	PMMO	NS	--	--	69.7		4.9	NS	--	--	NS	--	--	NS	--	--
	Soluble Methane Monooxygenase (SMMO)	NS	--	--	422		4.9	NS	--	--	NS	--	--	590		10.4
	Sulfate Reducing Bacteria (APS)	NS	--	--	96100		4.9	NS	--	--	NS	--	--	298000		10.4
	tceA Reductase (TCE)	NS	--	--	ND	U	0.5	NS	--	--	NS	--	--	ND	U	1
	Toluene Dioxygenase (TOD)	NS	--	--	ND	U	4.9	NS	--	--	NS	--	--	ND	U	10.4
	Toluene Monooxygenase (RMO)	NS	--	--	22100		4.9	NS	--	--	NS	--	--	17800		10.4
	Toluene Monooxygenase 2 (RDEG)	NS	--	--	8480		4.9	NS	--	--	NS	--	--	8300		10.4
	Total Eubacteria (EBAC)	NS	--	--	6130000		4.9	NS	--	--	NS	--	--	22700000		10.4
	trans-1,2-DCE Reductase (TDR)	NS	--	--	NS	--	--	NS	--	--	NS	--	--	ND	U	10.4
	Trichlorobenzene Dioxygenase (TCBO)	NS	--	--	ND	U	4.9	NS	--	--	NS	--	--	ND	U	10.4
	Vinyl Chloride Reductase (VCR)	NS	--	--	0.3	J	0.5	NS	--	--	NS	--	--	ND	U	
EDB (µg/L) EPA Method 8011	1,2-DIBROMOETHANE	43.1		3.83	20.3		1.91	69.9		1.9	65		1.88	80.3	J+	1.9
Fluorometric (µg/L) Spectrofluorophotometry	FLUORESCEIN	5.942		0.01	5.489		0.01	NS	--	--	NS	--	--	NS	--	--
Reduced Gases (µg/L) RSKSOP-175	ACETYLENE	ND	U	10	ND	U	10	ND	U	10	ND	U	10	ND	U	10
	ETHANE	ND	U	4	ND	U	4	2.01	J	4	1.82	J	4	2.86		4
	ETHYLENE	3.46	J	5	5.07		5	6.46		5	ND	U	5	9.47		5
	METHANE	11.4		2	20.5		2	15		2	16.5		2	25.3		2
	PROPANE	ND	U	6	ND	U	6	1.93	J	6	2.23	J	6	3.21	J	6
General Chemistry (mg/L) SM2320b, EPA Method 300, EPA Method 353.2, SM4500 PE	ALKALINITY	300		1	312		1	354		1	341		1	352		1
	BROMIDE	0.596		0.25	0.654		0.25	0.565		0.25	0.644		0.25	0.606		0.125
	CHLORIDE	44.8		0.66	45.7		0.66	53.3		0.66	53.7		0.66	48.6		0.66
	IODIDE	ND	U	0.75	ND	U	0.75	11		0.75	13		0.75	18		0.75
	NITRATE	NS	--	--	NS	--	--	NS	--	--	NS	--	--	NS	--	--
	NITRITE	NS	--	--	NS	--	--	NS	--	--	NS	--	--	NS	--	--
	NITROGEN, NITRATE-NITRITE	ND	U	0.375	ND	U	0.375	ND	U	0.375	ND	U	0.375	ND	U	0.375
	O-PHOSPHATE (AS P)	0.019	J	0.02	ND	U	0.02	1.12		0.04	1.92		0.04	1.72		0.1
	SULFATE	ND	U	2	ND	U	2	ND	U	2	ND	U	2	ND	U	2

Table 8
Groundwater Analytical Results for KAFB-106064

	Phase Designation	Phase 1 Passive						Phase 2 Recirculation						Phase 2 Recirculation		
	Sample ID	106064-P1P-111517			106064-P1P-112817			106064-P2R-011018			106064-P2R-011818			106064-P2R-012518		
	Sample Date	11/15/2017			11/28/2017			1/10/2018			1/18/2018			1/25/2018		
	Sample Pupose	REG			REG			REG			REG			REG		
Chemical Class and Analytical Method[a]	Parameter	Result	Val Qual	LOQ	Result	Val Qual	LOQ	Result	Val Qual	LOQ	Result	Val Qual	LOQ	Result	Val Qual	LOQ
VFAs (mg/L) EPA Method 300m	ACETIC ACID	20.1		1	21		1	73		1	79.8		1	44.9		1
	BUTYRIC ACID	ND	U	1	ND	U	1	ND	U	1	1.05		1	0.74	J	1
	FORMIC ACID	ND	U	1	ND	U	1	ND	U	1	ND	U	1	ND	U	1
	LACTIC ACID	ND	U	1	ND	U	1	3.02		1	2.59		1	0.72	J	1
	PROPIONIC ACID	0.68	J	1	0.57	J	1	13		1	20.3		1	10.5		1
	PYRUVIC ACID	ND	U	1	ND	U	1	ND	U	1	ND	U	1	ND	U	1
	VALERIC ACID	ND	U	1	ND	U	1	ND	U	1	ND	U	1	ND	U	1
Dissolved Metals (mg/L) EPA Method 6010	IRON	1.04		0.06	1.67		0.06	4.67		0.06	1.31		0.06	1.76	J-	0.06
	MANGANESE	2.53		0.006	2.72		0.006	0.777		0.006	3.69		0.006	3.75	J-	0.006
δ2H (‰) Mass Spectrometry, USGS Reston, VA	DELTA2H	-88.46		-99	-87.46		-99	NS	--	--	NS	--	--	NS	--	--
CSIA EDB δ13C ‰) Kuder et al, 2012	EDB δ	NS	--	--	-1.3 ±2‰	--	--	NS	--	--	NS	--	--	-9.3 ±2‰	--	--
VOCs (µg/L) EPA Method 8260	1,1,2-TRICHLOROETHANE	ND	U	50	ND	U	125	ND	U	50	ND	U	50	ND	U	50
	1,2,4-TRIMETHYLBENZENE	344		50	488		125	342		50	274		50	398		50
	1,2-DIBROMOETHANE	49.9	J	50	ND	U	125	63.6	J	50	59.5	J	50	62.8	J	50
	1,2-DICHLOROETHANE	ND	U	50	ND	U	125	ND	U	50	ND	U	50	ND	U	50
	1,3,5-TRIMETHYLBENZENE	122		50	171	J	125	126		50	97.8	J	50	149		50
	2-BUTANONE	ND	U	500	ND	U	1250	ND	U	500	ND	U	500	ND	U	500
	2-CHLOROTOLUENE	ND	U	50	ND	U	125	ND	U	50	ND	U	50	ND	U	50
	2-HEXANONE	142	J	250	ND	U	625	ND	U	250	ND	U	250	ND	U	250
	4-METHYL-2-PENTANONE	ND	U	250	ND	U	625	ND	U	250	ND	U	250	ND	U	250
	ACETONE	ND	U	500	ND	U	1250	447	J	500	418	J	500	265	J	500
	BENZENE	3850		50	3680		125	3950		50	3700		50	4070		50
	CARBON DISULFIDE	ND	U	50	ND	U	125	ND	U	50	ND	U	50	ND	U	50
	CHLOROMETHANE	ND	U	50	ND	U	125	64.8		50	ND	U	50	ND	U	50
	DICHLORODIFLUOROMETHANE	ND	U	100	ND	U	250	ND	U	100	ND	U	100	ND	U	100
	ETHYLBENZENE	1470		50	2040		125	1010		50	956		50	1180		50
	ISOPROPYLBENZENE	149		50	192	J	125	97.4	J	50	89.1	J	50	96.8	J	50
	METHYL TERT-BUTYL ETHER	ND	U	50	ND	U	125	ND	U	50	ND	U	50	ND	U	50
	METHYLENE CHLORIDE	ND	U	100	ND	U	250	55.6	J	100	ND	U	100	ND	U	100
	NAPHTHALENE	139		50	132	J	125	106		50	125		50	100		50
	N-BUTYLBENZENE	ND	U	50	ND	U	125	ND	U	50	ND	U	50	ND	U	50
	N-PROPYLBENZENE	103		50	147	J	125	93.3	J	50	93.3	J	50	103		50
	P-ISOPROPYLTOLUENE	101		50	148	J	125	98.8	J	50	81.5	J	50	ND	U	50
	SEC-BUTYLBENZENE	ND	U	50	ND	U	125	ND	U	50	ND	U	50	ND	U	50
	TERT-BUTYLBENZENE	ND	U	50	ND	U	125	ND	U	50	ND	U	50	ND	U	50
	TOLUENE	16900		50	19500		125	9200		50	9850		50	11300		50
	TRICHLOROETHENE	ND	U	50	ND	U	125	ND	U	50	ND	U	50	ND	U	50
	TRICHLOROFLUOROMETHANE	ND	U	100	ND	U	250	ND	U	100	ND	U	100	ND	U	100
	XYLENES	4270		150	5730		375	3180		150	3020		150	3740		150

Notes:

a. EPA analytical methods listed are for the most recent sampling event.

b. Samples were collected using Geotech Bladder Pumps.

c. Samples were recollected (except for QuantArray-Chlor analysis) using replacement QED Bladder Pumps.

-- = Not applicable.

δ2H - Delta Deuterium.

0/00 - Per mille.

cells/mL = Cells per milliliter.

EPA = Environmental Protection Agency.

FD = Field duplicate.

ID = Identification.

J = Estimated value, concentration is less than LOQ but greater than laboratory method detection limit (DL).

J+ = Estimated value, concentration is less than LOQ but greater than laboratory method detection limit (DL); biased high.

J- = Estimated value, concentration is less than LOQ but greater than laboratory method detection limit (DL); biased low.

KAFB = Kirtland Air Force Base.

LOQ = Limit of Quantitation

µg/L = Microgram per liter.

mg/L = Milligram per liter.

NA = Not analyzed.

ND = Not detected.

NS = Not sampled.

REG = Regular/parent sample.

U = Analyte was not detected. The reported numerical value is at or below the LOQ.

UJ = Analyte was not detected. The reported value is estimated.

VAL QUAL = Validation qualifier.

VFA - Volatile fatty acid.

VOC = Volatile organic compound.

Table 8
Groundwater Analytical Results for KAFB-106064

	Phase Designation	Phase 2 Passive						Phase 2 Passive			Phase 2 Passive								
	Sample ID	106064-P2P-030718			106064-P2P-041018			106064-P2P-050918			106064-P2P-050918-FD			106064-P2P-061418			106064-P2P-061418-FD		
	Sample Date	3/7/2018			4/10/2018			5/9/2018			5/9/2018			6/14/2018			6/14/2018		
	Sample Pupose	REG			REG			REG			FD			REG			FD		
Chemical Class and Analytical Method[a]	Parameter	Result	Val Qual	LOQ	Result	Val Qual	LOQ	Result	Val Qual	LOQ	Result	Val Qual	LOQ	Result	Val Qual	LOQ	Result	Val Qual	LOQ
Microbial Community (cells/mL) QuantArray-Chlor	1,1 DCA Reductase (DCA)	NS	--	--	NS	--	--	ND	U	9.1	NS	--	--	NS	--	--	NS	--	--
	1,2 DCA Reductase (DCAR)	NS	--	--	NS	--	--	ND	U	9.1	NS	--	--	NS	--	--	NS	--	--
	BAV1 Vinyl Chloride Reductase (BVC)	NS	--	--	NS	--	--	ND	U	0.9	NS	--	--	NS	--	--	NS	--	--
	Chloroform Reductase (CFR)	NS	--	--	NS	--	--	ND	U	9.1	NS	--	--	NS	--	--	NS	--	--
	Dehalobacter DCM (DCM)	NS	--	--	NS	--	--	11800		9.1	NS	--	--	NS	--	--	NS	--	--
	Dehalobacter spp. (DHBt)	NS	--	--	NS	--	--	132000		9.1	NS	--	--	NS	--	--	NS	--	--
	Dehalobium chlorocoercia (DECO)	NS	--	--	NS	--	--	23100		9.1	NS	--	--	NS	--	--	NS	--	--
	Dehalococcoides (DHC)	NS	--	--	NS	--	--	ND	U	0.9	NS	--	--	NS	--	--	NS	--	--
	Dehalogenimonas spp. (DHG)	NS	--	--	NS	--	--	1110		9.1	NS	--	--	NS	--	--	NS	--	--
	Desulfitobacterium spp. (DSB)	NS	--	--	NS	--	--	64900		9.1	NS	--	--	NS	--	--	NS	--	--
	Desulfuromonas spp. (DSM)	NS	--	--	NS	--	--	132		9.1	NS	--	--	NS	--	--	NS	--	--
	Dichloromethane Dehalogenase (DCMA)	NS	--	--	NS	--	--	ND	U	9.1	NS	--	--	NS	--	--	NS	--	--
	Epoxyalkane Transferase (EtnE)	NS	--	--	NS	--	--	ND	U	9.1	NS	--	--	NS	--	--	NS	--	--
	Ethene Monooxygenase (EtnC)	NS	--	--	NS	--	--	85.4		9.1	NS	--	--	NS	--	--	NS	--	--
	Methanogens (MGN)	NS	--	--	NS	--	--	524		9.1	NS	--	--	NS	--	--	NS	--	--
	PCE Reductase (PCE-1)	NS	--	--	NS	--	--	ND	U	9.1	NS	--	--	NS	--	--	NS	--	--
	Phenol Hydroxylase (PHE)	NS	--	--	NS	--	--	8350		9.1	NS	--	--	NS	--	--	NS	--	--
	PMMO	NS	--	--	NS	--	--	NS	--	--	NS	--	--	NS	--	--	NS	--	--
	Soluble Methane Monooxygenase (SMMO)	NS	--	--	NS	--	--	608		9.1	NS	--	--	NS	--	--	NS	--	--
	Sulfate Reducing Bacteria (APS)	NS	--	--	NS	--	--	71300		9.1	NS	--	--	NS	--	--	NS	--	--
	tceA Reductase (TCE)	NS	--	--	NS	--	--	ND	U	0.9	NS	--	--	NS	--	--	NS	--	--
	Toluene Dioxygenase (TOD)	NS	--	--	NS	--	--	ND	U	9.1	NS	--	--	NS	--	--	NS	--	--
	Toluene Monooxygenase (RMO)	NS	--	--	NS	--	--	16500		9.1	NS	--	--	NS	--	--	NS	--	--
	Toluene Monooxygenase 2 (RDEG)	NS	--	--	NS	--	--	8850		9.1	NS	--	--	NS	--	--	NS	--	--
	Total Eubacteria (EBAC)	NS	--	--	NS	--	--	16100000		9.1	NS	--	--	NS	--	--	NS	--	--
	trans-1,2-DCE Reductase (TDR)	NS	--	--	NS	--	--	ND	U	9.1	NS	--	--	NS	--	--	NS	--	--
	Trichlorobenzene Dioxygenase (TCBO)	NS	--	--	NS	--	--	ND	U	9.1	NS	--	--	NS	--	--	NS	--	--
	Vinyl Chloride Reductase (VCR)	NS	--	--	NS	--	--	ND	U		NS	--	--	NS	--	--	NS	--	--
EDB (µg/L) EPA Method 8011	1,2-DIBROMOETHANE	26.8	J+	1.9	12.6	J	1.9	6.2		0.189	10.6		0.382	6.19		0.384	6.45		0.384
Fluorometric (µg/L) Spectrofluorophotometry	FLUORESCEIN	NS	--	--	NS	--	--	NS	--	--	NS	--	--	NS	--	--	NS	--	--
Reduced Gases (µg/L) RSKSOP-175	ACETYLENE	ND	U	10	ND	U	10	ND	U	10	ND	U	10	ND	UJ	10	ND	UJ	10
	ETHANE	3.1	J	4	4.5		4	4.5		4	4.59		4	5.3	J	4	5.3	J	4
	ETHYLENE	11.5		5	12.93		5	11		5	11.7		5	12.6	J	5	13.2	J	5
	METHANE	141		2	191		20	601		2	614		2	250	J	2	266	J	2
	PROPANE	2.9	J	6	4.3	J	6	4.8	J	6	4.9	J	6	6	J	6	6.5	J	6
General Chemistry (mg/L) SM2320b, EPA Method 300, EPA Method 353.2, SM4500 PE	ALKALINITY	423		1	374		1	421		1	402		1	483	J-	1	473	J-	1
	BROMIDE	0.53	J	0.625	0.576		0.25	0.597		0.25	0.594		0.25	0.416	J	0.625	0.417	J	0.625
	CHLORIDE	47.8		1.65	51.1		0.66	51.8		0.66	52		0.66	49.3		1.65	49.4		1.65
	IODIDE	18		0.75	17	J-	0.75	22		1.5	22		1.5	19		1.5	20		1.5
	NITRATE	NS	--	--	ND	U	0.2	ND	U	0.2	ND	U	0.2	ND	U	0.5	ND	U	0.5
	NITRITE	NS	--	--	ND	U	0.2	ND	U	0.2	ND	U	0.2	ND	U	0.5	ND	U	0.5
	NITROGEN, NITRATE-NITRITE	ND	U	0.375	NS	--	--	NS	--	--	NS	--	--	NS	--	--	NS	--	--
	O-PHOSPHATE (AS P)	1.66	J-	0.2	1.07		0.04	1.28		0.04	1.27		0.04	1.45		0.04	6.73		0.2
	SULFATE	ND	U	5	ND	U	2	ND	U	2	ND	U	2	ND	U	5	ND	U	5

Table 8
Groundwater Analytical Results for KAFB-106064

	Phase Designation	Phase 2 Passive						Phase 2 Passive			Phase 2 Passive								
	Sample ID	106064-P2P-030718			106064-P2P-041018			106064-P2P-050918			106064-P2P-050918-FD			106064-P2P-061418			106064-P2P-061418-FD		
	Sample Date	3/7/2018			4/10/2018			5/9/2018			5/9/2018			6/14/2018			6/14/2018		
	Sample Pupose	REG			REG			REG			FD			REG			FD		
Chemical Class and Analytical Method[a]	Parameter	Result	Val Qual	LOQ	Result	Val Qual	LOQ	Result	Val Qual	LOQ	Result	Val Qual	LOQ	Result	Val Qual	LOQ	Result	Val Qual	LOQ
VFAs (mg/L) EPA Method 300m	ACETIC ACID	126		10	142.1		10	119		10	122		10	141	J	10	121	J	10
	BUTYRIC ACID	1.8		1	ND	U	1	ND	U	1	ND	U	1	ND	UJ	10	ND	UJ	10
	FORMIC ACID	ND	U	1	1.2		1	0.4	J	1	0.3	J	1	ND	UJ	10	ND	UJ	10
	LACTIC ACID	ND	U	1	ND	U	10	ND	U	1	ND	U	1	ND	UJ	10	ND	UJ	10
	PROPIONIC ACID	36.6		1	27.1		10	24.3		1	24.1		1	11.6	J	10	8.9	J	10
	PYRUVIC ACID	0.8	J	1	ND	U	1	0.5	J	1	ND	U	1	ND	UJ	10	ND	UJ	10
	VALERIC ACID	0.6	J	1	ND	U	1	ND	U	1	ND	U	1	ND	UJ	10	ND	UJ	10
Dissolved Metals (mg/L) EPA Method 6010	IRON	3.68		0.06	4.43	J-	0.06	5.07		0.06	4.81		0.06	4.23		0.06	4.11		0.06
	MANGANESE	4.47		0.006	5.4	J+	0.006	5.62		0.006	5.41		0.006	5.85		0.006	5.47		0.006
δ2H (‰) Mass Spectrometry, USGS Reston, VA	DELTA2H	NS	--	--	NS	--	--	NS	--	--	NS	--	--	NS	--	--	NS	--	--
CSIA EDB δ13C ‰) Kuder et al, 2012	EDB δ	NS	--	--	NS	--	--	-1.2 ±1.5‰	--	--	NS	--	--	NS	--	--	NS	--	--
VOCs (µg/L) EPA Method 8260	1,1,2-TRICHLOROETHANE	ND	U	100	ND	U	50	ND	U	100	ND	U	100	ND	U	100	ND	U	100
	1,2,4-TRIMETHYLBENZENE	354		100	446		50	404		100	409		100	367		100	352		100
	1,2-DIBROMOETHANE	ND	U	100	ND	U	50	ND	U	100	ND	U	100	ND	U	100	ND	U	100
	1,2-DICHLOROETHANE	ND	U	100	ND	U	50	ND	U	100	ND	U	100	ND	U	100	ND	U	100
	1,3,5-TRIMETHYLBENZENE	118	J	100	152		50	124	J	100	142	J	100	122	J	100	123	J	100
	2-BUTANONE	ND	U	1000	ND	U	500	ND	U	1000	ND	U	1000	ND	U	1000	ND	U	1000
	2-CHLOROTOLUENE	ND	U	100	ND	U	50	ND	U	100	ND	U	100	ND	U	100	ND	U	100
	2-HEXANONE	ND	U	500	ND	U	250	ND	U	500	ND	U	500	ND	U	500	ND	U	500
	4-METHYL-2-PENTANONE	ND	U	500	ND	U	250	ND	U	500	ND	U	500	ND	U	500	ND	U	500
	ACETONE	ND	U	1000	435	J	500	ND	U	1000	ND	U	1000	657	J	1000	657	J	1000
	BENZENE	4010		100	3380		50	3490		100	3620		100	3820		100	3820		100
	CARBON DISULFIDE	ND	U	100	ND	U	50	ND	U	100	ND	U	100	ND	U	100	ND	U	100
	CHLOROMETHANE	ND	U	100	ND	U	50	ND	U	100	ND	U	100	ND	U	100	ND	U	100
	DICHLORODIFLUOROMETHANE	ND	U	200	ND	U	100	ND	U	200	ND	U	200	ND	U	200	ND	U	200
	ETHYLBENZENE	1810		100	1960		50	1660		100	1670		100	1370		100	1390		100
	ISOPROPYLBENZENE	193	J	100	248		50	202		100	207		100	149	J	100	158	J	100
	METHYL TERT-BUTYL ETHER	ND	U	100	ND	U	50	ND	U	100	ND	U	100	ND	U	100	ND	U	100
	METHYLENE CHLORIDE	ND	U	200	ND	U	100	ND	U	200	ND	U	200	ND	U	200	ND	U	200
	NAPHTHALENE	93.6	J	100	143		50	137	J	100	137	J	100	110	J	100	113	J	100
	N-BUTYLBENZENE	ND	U	100	ND	U	50	ND	U	100	ND	U	100	ND	U	100	ND	U	100
	N-PROPYLBENZENE	95.8	J	100	140		50	124	J	100	117	J	100	104	J	100	112	J	100
	P-ISOPROPYLTOLUENE	ND	U	100	50.8	J	50	56.1	J	100	56.2	J	100	ND	U	100	56.6	J	100
	SEC-BUTYLBENZENE	ND	U	100	ND	U	50	ND	U	100	ND	U	100	ND	U	100	ND	U	100
	TERT-BUTYLBENZENE	ND	U	100	ND	U	50	ND	U	100	ND	U	100	ND	U	100	ND	U	100
	TOLUENE	15500		100	12100		50	13900		100	14000		100	13000		100	12900		100
	TRICHLOROETHENE	ND	U	100	ND	U	50	ND	U	100	ND	U	100	ND	U	100	ND	U	100
	TRICHLOROFLUOROMETHANE	ND	U	200	ND	U	100	ND	U	200	ND	U	200	ND	U	200	ND	U	200
	XYLENES	5320		300	5290		150	5130		300	5220		300	4450		300	4410		300

Notes:

a. EPA analytical methods listed are for the most recent sampling event.

b. Samples were collected using Geotech Bladder Pumps.

c. Samples were recollected (except for QuantArray-Chlor analysis) using replacement QED Bladder Pumps.

-- = Not applicable.

δ2H - Delta Deuterium.

0/00 - Per mille.

cells/mL = Cells per milliliter.

EPA = Environmental Protection Agency.

FD = Field duplicate.

ID = Identification.

J = Estimated value, concentration is less than LOQ but greater than laboratory method detection limit (DL).

J+ = Estimated value, concentration is less than LOQ but greater than laboratory method detection limit (DL); biased high.

J- = Estimated value, concentration is less than LOQ but greater than laboratory method detection limit (DL); biased low.

KAFB = Kirtland Air Force Base.

LOQ = Limit of Quantitation

µg/L = Microgram per liter.

mg/L = Milligram per liter.

NA = Not analyzed.

ND = Not detected.

NS = Not sampled.

REG = Regular/parent sample.

U = Analyte was not detected. The reported numerical value is at or below the LOQ.

UJ = Analyte was not detected. The reported value is estimated.

VAL QUAL = Validation qualifier.

VFA - Volatile fatty acid.

VOC = Volatile organic compound.

Table 8
Groundwater Analytical Results for KAFB-106064

	Phase Designation	Phase 3 Recirculation			Phase 3 Recirculation									Phase 3 Passive					
	Sample ID	106064-P3R-080818			106064-P3R-081618			106064-P3R-082218			106064-P3R-082918			106064-P3P-091218			106064-P3P-091218-FD		
	Sample Date	8/8/2018			8/16/2018			8/22/2018			8/29/2018			9/12/2018			9/12/2018		
	Sample Pupose	REG			REG			REG			REG			REG			FD		
Chemical Class and Analytical Method[a]	Parameter	Result	Val Qual	LOQ	Result	Val Qual	LOQ	Result	Val Qual	LOQ	Result	Val Qual	LOQ	Result	Val Qual	LOQ	Result	Val Qual	LOQ
Microbial Community (cells/mL) QuantArray-Chlor	1,1 DCA Reductase (DCA)	NS	--	--	NS	--	--	ND	U	5	NS	--	--	NS	--	--	NS	--	--
	1,2 DCA Reductase (DCAR)	NS	--	--	NS	--	--	ND	U	5	NS	--	--	NS	--	--	NS	--	--
	BAV1 Vinyl Chloride Reductase (BVC)	NS	--	--	NS	--	--	ND	U	0.5	NS	--	--	NS	--	--	NS	--	--
	Chloroform Reductase (CFR)	NS	--	--	NS	--	--	ND	U	5	NS	--	--	NS	--	--	NS	--	--
	Dehalobacter DCM (DCM)	NS	--	--	NS	--	--	17400		5	NS	--	--	NS	--	--	NS	--	--
	Dehalobacter spp. (DHBt)	NS	--	--	NS	--	--	15100		5	NS	--	--	NS	--	--	NS	--	--
	Dehalobium chlorocoercia (DECO)	NS	--	--	NS	--	--	52000		5	NS	--	--	NS	--	--	NS	--	--
	Dehalococcoides (DHC)	NS	--	--	NS	--	--	0.3	J	0.5	NS	--	--	NS	--	--	NS	--	--
	Dehalogenimonas spp. (DHG)	NS	--	--	NS	--	--	ND	U	5	NS	--	--	NS	--	--	NS	--	--
	Desulfitobacterium spp. (DSB)	NS	--	--	NS	--	--	105000		5	NS	--	--	NS	--	--	NS	--	--
	Desulfuromonas spp. (DSM)	NS	--	--	NS	--	--	ND	U	5	NS	--	--	NS	--	--	NS	--	--
	Dichloromethane Dehalogenase (DCMA)	NS	--	--	NS	--	--	ND	U	5	NS	--	--	NS	--	--	NS	--	--
	Epoxyalkane Transferase (EtnE)	NS	--	--	NS	--	--	124		5	NS	--	--	NS	--	--	NS	--	--
	Ethene Monooxygenase (EtnC)	NS	--	--	NS	--	--	ND	U	5	NS	--	--	NS	--	--	NS	--	--
	Methanogens (MGN)	NS	--	--	NS	--	--	10400		5	NS	--	--	NS	--	--	NS	--	--
	PCE Reductase (PCE-1)	NS	--	--	NS	--	--	ND	U	5	NS	--	--	NS	--	--	NS	--	--
	Phenol Hydroxylase (PHE)	NS	--	--	NS	--	--	18900		5	NS	--	--	NS	--	--	NS	--	--
	PMMO	NS	--	--	NS	--	--	NS	--	--	NS	--	--	NS	--	--	NS	--	--
	Soluble Methane Monooxygenase (SMMO)	NS	--	--	NS	--	--	ND	U	5	NS	--	--	NS	--	--	NS	--	--
	Sulfate Reducing Bacteria (APS)	NS	--	--	NS	--	--	825000		5	NS	--	--	NS	--	--	NS	--	--
	tceA Reductase (TCE)	NS	--	--	NS	--	--	ND	U	0.5	NS	--	--	NS	--	--	NS	--	--
	Toluene Dioxygenase (TOD)	NS	--	--	NS	--	--	ND	U	5	NS	--	--	NS	--	--	NS	--	--
	Toluene Monooxygenase (RMO)	NS	--	--	NS	--	--	44400		5	NS	--	--	NS	--	--	NS	--	--
	Toluene Monooxygenase 2 (RDEG)	NS	--	--	NS	--	--	11900		5	NS	--	--	NS	--	--	NS	--	--
	Total Eubacteria (EBAC)	NS	--	--	NS	--	--	29600000		5	NS	--	--	NS	--	--	NS	--	--
	trans-1,2-DCE Reductase (TDR)	NS	--	--	NS	--	--	ND	U	5	NS	--	--	NS	--	--	NS	--	--
	Trichlorobenzene Dioxygenase (TCBO)	NS	--	--	NS	--	--	ND	U	5	NS	--	--	NS	--	--	NS	--	--
	Vinyl Chloride Reductase (VCR)	NS	--	--	NS	--	--	ND	U		NS	--	--	NS	--	--	NS	--	--
EDB (µg/L) EPA Method 8011	1,2-DIBROMOETHANE	8.1		0.03	5.5		0.03	2.5		0.0003	3		0.015	1.5		0.0058	1.7		0.015
Fluorometric (µg/L) Spectrofluorophotometry	FLUORESCEIN	NS	--	--	NS	--	--	NS	--	--	NS	--	--	NS	--	--	NS	--	--
Reduced Gases (µg/L) RSKSOP-175	ACETYLENE	ND	U	10	ND	U	10	ND	U	10	ND	U	10	ND	U	10			
	ETHANE	4.4		4	5.1		4	4.8		4	2.5	J	4	4.2		4			
	ETHYLENE	12.6		5	15.8		5	13.2		5	7.7		5	10.4		5			
	METHANE	731.3		2	3096.4		2	3897.9		2	2501.3		2	7053.1		2			
	PROPANE	5.8	J	6	5.7	J	6	5.9	J	6	3.2	J	6	5.7	J	6			
General Chemistry (mg/L) SM2320b, EPA Method 300, EPA Method 353.2, SM4500 PE	ALKALINITY	390		5	390		5	420		5	420		5	450		5	460		5
	BROMIDE	1.8		1	1.1		0.5	2		0.5	0.85		0.5	0.78	J+	0.5	0.77		0.5
	CHLORIDE	61		1	54		0.5	52		0.5	54		0.5	51		0.5	51		0.5
	IODIDE	3.7		0.75	4.7		0.75	3.1		0.75	5		0.75	4.5		0.75	5.3		0.75
	NITRATE	NS	--	--	NS	--	--	NS	--	--	NS	--	--	NS	--	--	NS	--	--
	NITRITE	NS	--	--	NS	--	--	NS	--	--	NS	--	--	NS	--	--	NS	--	--
	NITROGEN, NITRATE-NITRITE	ND	R	0.05	ND	U	0.05	ND		0.05	ND	U	0.05	ND	UJ	0.05	ND	U	0.05
	O-PHOSPHATE (AS P)	0.39	J-	0.15	2.5		0.15	3.5		0.15	4.3		0.15	3.9		0.15	3.9		0.15
	SULFATE	2.2		2	ND	U	1	ND		1	ND	U	1	ND	U	1	ND	U	1

Table 8
Groundwater Analytical Results for KAFB-106064

	Phase Designation	Phase 3 Recirculation			Phase 3 Recirculation									Phase 3 Passive					
	Sample ID	106064-P3R-080818			106064-P3R-081618			106064-P3R-082218			106064-P3R-082918			106064-P3P-091218			106064-P3P-091218-FD		
	Sample Date	8/8/2018			8/16/2018			8/22/2018			8/29/2018			9/12/2018			9/12/2018		
	Sample Pupose	REG			REG			REG			REG			REG			FD		
Chemical Class and Analytical Method[a]	Parameter	Result	Val Qual	LOQ	Result	Val Qual	LOQ	Result	Val Qual	LOQ	Result	Val Qual	LOQ	Result	Val Qual	LOQ	Result	Val Qual	LOQ
VFAs (mg/L) EPA Method 300m	ACETIC ACID	136.4		10	126		10	119.3		10	94.8		10	50.6		10	50.1		10
	BUTYRIC ACID	ND	U	1	ND	U	1	ND	U	1	ND	U	1	ND	U	1	ND	U	1
	FORMIC ACID	5.9	J	10	0.7	J	10	0.7	J	10	1.4		1	ND	U	1	ND	U	1
	LACTIC ACID	ND	U	1	ND	U	1	ND	U	1	ND	U	1	ND	U	1	ND	U	1
	PROPIONIC ACID	22.2		10	52.9		10	66.7		10	66.9		10	74.9		10	76.1		10
	PYRUVIC ACID	ND	U	1	ND	U	1	ND	U	1	ND	U	1	ND	U	1	ND	U	1
	VALERIC ACID	ND	U	1	ND	U	1	ND	U	1	ND	U	1	ND	U	1	ND	U	1
Dissolved Metals (mg/L) EPA Method 6010	IRON	3.1		0.05	2.9		0.05	3.4		0.05	2.6		0.05	3		0.05	3		0.05
	MANGANESE	5.8		0.003	6		0.003	7.2		0.003	6		0.003	6.5		0.003	6.6		0.003
δ2H (‰) Mass Spectrometry, USGS Reston, VA	DELTA2H	NS	--	--	NS	--	--	NS	--	--	NS	--	--	NS	--	--	NS	--	--
CSIA EDB δ13C ‰) Kuder et al, 2012	EDB δ	NS	--	--	NS	--	--	-10.2 ±1.5‰	--	--	NS	--	--	-4.5 ±5‰	--	--	NS	--	--
VOCs (µg/L) EPA Method 8260	1,1,2-TRICHLOROETHANE	ND	U	0.5	ND	U	0.5	ND	U	50	ND	U	0.5	ND	U	50	ND	U	50
	1,2,4-TRIMETHYLBENZENE	350		20	370		100	360	J+	100	320		100	350		100	360		100
	1,2-DIBROMOETHANE	8.5	J+	1	ND	U	1	ND	U	100	4.7	J+	1	ND	U	100	ND	U	100
	1,2-DICHLOROETHANE	ND	U	1	ND	U	1	ND	U	100	3.2		1	ND	U	100	ND	U	100
	1,3,5-TRIMETHYLBENZENE	110	J+	0.5	110		0.5	110	J+	50	110	J+	0.5	120		50	120		50
	2-BUTANONE	50	J+	10	63		10	ND	U	1000	74	J+	10	ND	U	1000	ND	U	1000
	2-CHLOROTOLUENE	ND	U	0.5	ND	U	0.5	ND	U	50	ND	U	0.5	ND	U	50	ND	U	50
	2-HEXANONE	69	J+	5	80		5	ND	U	500	78	J+	5	ND	U	500	ND	U	500
	4-METHYL-2-PENTANONE	69	J+	5	63		5	ND	U	500	66	J+	5	ND	U	500	ND	U	500
	ACETONE	160	J+	10	200		10	ND	U	1000	280	J+	10	ND	U	1000	ND	U	1000
	BENZENE	3700		20	3700		100	4000	J+	100	3500		100	3300		100	3400		100
	CARBON DISULFIDE	ND	U	2	ND	U	2	ND	U	200	ND	U	2	ND	U	200	ND	U	200
	CHLOROMETHANE	ND	U	1	ND	U	1	ND	U	100	ND	U	1	ND	U	100	ND	U	100
	DICHLORODIFLUOROMETHANE	ND	U	1	ND	U	1	ND	U	100	ND	U	1	ND	U	100	ND	U	100
	ETHYLBENZENE	1100		20	1100		100	1000		100	1000		100	1100		100	1200		100
	ISOPROPYLBENZENE	110	J+	1	98		1	110	J+	100	94	J+	1	100		100	100		100
	METHYL TERT-BUTYL ETHER	ND	U	0.5	ND	U	0.5	ND	U	50	ND	U	0.5	ND	U	50	ND	U	50
	METHYLENE CHLORIDE	ND	U	5	ND	U	5	ND	U	500	ND	U	5	ND	U	500	ND	U	500
	NAPHTHALENE	130	J+	5	130		5	ND	U	500	130	J+	5	ND	U	500	ND	U	500
	N-BUTYLBENZENE	18	J+	1	18		1	ND	U	100	19	J+	1	ND	U	100	ND	U	100
	N-PROPYLBENZENE	85	J+	1	86		1	88	J+	100	87	J+	1	94	J	100	92	J	100
	P-ISOPROPYLTOLUENE	85	J+	1	83		1	86	J+	100	77	J+	1	64	J	100	62	J	100
	SEC-BUTYLBENZENE	16	J+	1	16		1	ND	U	100	16	J+	1	ND	U	100	ND	U	100
	TERT-BUTYLBENZENE	1.3	J+	1	1.2		1	ND	U	100	ND	U	1	ND	U	100	ND	U	100
	TOLUENE	9400	J-	100	9700		100	12000	J+	100	10000		100	11000		100	11000		100
	TRICHLOROETHENE	ND	U	1	ND	U	1	ND	U	100	ND	U	1	ND	U	100	ND	U	100
	TRICHLOROFLUOROMETHANE	ND	U	1	ND	U	1	ND	U	100	ND	U	1	ND	U	100	ND	U	100
	XYLENES	3400		10	3400		50	3400	J+	50	3300		50	3500		50	3700		50

Notes:

a. EPA analytical methods listed are for the most recent sampling event.

b. Samples were collected using Geotech Bladder Pumps.

c. Samples were recollected (except for QuantArray-Chlor analysis) using replacement QED Bladder Pumps.

-- = Not applicable.

δ2H - Delta Deuterium.

0/00 - Per mille.

cells/mL = Cells per milliliter.

EPA = Environmental Protection Agency.

FD = Field duplicate.

ID = Identification.

J = Estimated value, concentration is less than LOQ but greater than laboratory method detection limit (DL).

J+ = Estimated value, concentration is less than LOQ but greater than laboratory method detection limit (DL); biased high.

J- = Estimated value, concentration is less than LOQ but greater than laboratory method detection limit (DL); biased low.

KAFB = Kirtland Air Force Base.

LOQ = Limit of Quantitation

µg/L = Microgram per liter.

mg/L = Milligram per liter.

NA = Not analyzed.

ND = Not detected.

NS = Not sampled.

REG = Regular/parent sample.

U = Analyte was not detected. The reported numerical value is at or below the LOQ.

UJ = Analyte was not detected. The reported value is estimated.

VAL QUAL = Validation qualifier.

VFA - Volatile fatty acid.

VOC = Volatile organic compound.

Table 8
Groundwater Analytical Results for KAFB-106064

	Phase Designation	Phase 3 Passive						Phase 4 Passive					
	Sample ID	106064-P3P-100418			106064-P3P-111418			106064-P4P-011619			106064-P4P-011619-FD		
	Sample Date	10/4/2018			11/14/2018			1/16/2019			1/16/2019		
	Sample Pupose	REG			REG			REG			FD		
Chemical Class and Analytical Method[a]	Parameter	Result	Val Qual	LOQ	Result	Val Qual	LOQ	Result	Val Qual	LOQ	Result	Val Qual	LOQ
Microbial Community (cells/mL) QuantArray-Chlor	1,1 DCA Reductase (DCA)	NS	--	--	ND	U	5	ND	U	5.2	NS	--	--
	1,2 DCA Reductase (DCAR)	NS	--	--	ND	U	5	ND	U	5.2	NS	--	--
	BAV1 Vinyl Chloride Reductase (BVC)	NS	--	--	ND	U	0.5	ND	U	0.5	NS	--	--
	Chloroform Reductase (CFR)	NS	--	--	ND	U	5	ND	U	5.2	NS	--	--
	Dehalobacter DCM (DCM)	NS	--	--	2700		5	8140		5.2	NS	--	--
	Dehalobacter spp. (DHBt)	NS	--	--	169000		5	1350000		5.2	NS	--	--
	Dehalobium chlorocoercia (DECO)	NS	--	--	4820		5	22300		5.2	NS	--	--
	Dehalococcoides (DHC)	NS	--	--	ND	U	0.5	0.2	J	0.5	NS	--	--
	Dehalogenimonas spp. (DHG)	NS	--	--	ND	U	5	ND	U	5.2	NS	--	--
	Desulfitobacterium spp. (DSB)	NS	--	--	99400		5	450000		5.2	NS	--	--
	Desulfuromonas spp. (DSM)	NS	--	--	36.6		5	19.6		5.2	NS	--	--
	Dichloromethane Dehalogenase (DCMA)	NS	--	--	ND	U	5	ND	U	5.2	NS	--	--
	Epoxyalkane Transferase (EtnE)	NS	--	--	ND	U	5	94.8		5.2	NS	--	--
	Ethene Monooxygenase (EtnC)	NS	--	--	ND	U	5	ND	U	5.2	NS	--	--
	Methanogens (MGN)	NS	--	--	68700		5	127000		5.2	NS	--	--
	PCE Reductase (PCE-1)	NS	--	--	ND	U	5	ND	U	5.2	NS	--	--
	Phenol Hydroxylase (PHE)	NS	--	--	13300		5	15700		5.2	NS	--	--
	PMMO	NS	--	--	NS	--	--	NS	--	--	NS	--	--
	Soluble Methane Monooxygenase (SMMO)	NS	--	--	1080		5	ND	U	5.2	NS	--	--
	Sulfate Reducing Bacteria (APS)	NS	--	--	44700		5	72700		5.2	NS	--	--
	tceA Reductase (TCE)	NS	--	--	ND	U	0.5	ND	U	0.5	NS	--	--
	Toluene Dioxygenase (TOD)	NS	--	--	ND	U	5	ND	U	5.2	NS	--	--
	Toluene Monooxygenase (RMO)	NS	--	--	6670		5	18800		5.2	NS	--	--
	Toluene Monooxygenase 2 (RDEG)	NS	--	--	5350		5	11100		5.2	NS	--	--
	Total Eubacteria (EBAC)	NS	--	--	6160000		5	13100000		5.2	NS	--	--
	trans-1,2-DCE Reductase (TDR)	NS	--	--	ND	U	5	ND	U	5.2	NS	--	--
	Trichlorobenzene Dioxygenase (TCBO)	NS	--	--	ND	U	5	ND	U	5.2	NS	--	--
	Vinyl Chloride Reductase (VCR)	NS	--	--				ND	U	0.5	NS	--	--
EDB (µg/L) EPA Method 8011	1,2-DIBROMOETHANE	0.32	J+	0.0015	0.025	J	0.00029	0.028		0.0003	0.026		0.0003
Fluorometric (µg/L) Spectrofluorophotometry	FLUORESCEIN	NS	--	--	NS	--	--	NS	--	--	NS	--	--
Reduced Gases (µg/L) RSKSOP-175	ACETYLENE	ND	U	10	ND	U	10	ND		10			
	ETHANE	3.9	J	4	4.3		4	4.5		4			
	ETHYLENE	8.4		5	8.3		5	6.7		5			
	METHANE	11125.4		2	14886.8		2	14220.9		20			
	PROPANE	5.1	J	6	5.1	J	6	5.5		6			
General Chemistry (mg/L) SM2320b, EPA Method 300, EPA Method 353.2, SM4500 PE	ALKALINITY	480		5	510		5	510		5	510		5
	BROMIDE	1.4		0.5	1.3		0.5	1.1		0.5	0.77		0.5
	CHLORIDE	48		0.5	48		0.5	47		0.5	48		0.5
	IODIDE	4.2		0.75	4.2	J+	0.75	4		0.75			
	NITRATE	NS	--	--	NS	--	--	NS	--	--	NS	--	--
	NITRITE	NS	--	--	NS	--	--	NS	--	--	NS	--	--
	NITROGEN, NITRATE-NITRITE	ND	U	0.05	ND	U	0.05	ND		0.05	ND		0.05
	O-PHOSPHATE (AS P)	2.9		0.15	0.92	J	0.75	0.14		0.15	0.12		0.15
	SULFATE	ND	U	1	ND	U	1	ND		1	ND		1

Table 8
Groundwater Analytical Results for KAFB-106064

	Phase Designation	Phase 3 Passive						Phase 4 Passive					
	Sample ID	106064-P3P-100418			106064-P3P-111418			106064-P4P-011619			106064-P4P-011619-FD		
	Sample Date	10/4/2018			11/14/2018			1/16/2019			1/16/2019		
	Sample Pupose	REG			REG			REG			FD		
Chemical Class and Analytical Method[a]	Parameter	Result	Val Qual	LOQ	Result	Val Qual	LOQ	Result	Val Qual	LOQ	Result	Val Qual	LOQ
VFAs (mg/L) EPA Method 300m	ACETIC ACID	29.5		10	ND	U	1	0.5		1	0.34	J	1
	BUTYRIC ACID	ND	U	1	ND	U	1	ND		1	ND	U	1
	FORMIC ACID	ND	U	1	ND	U	1	ND		1	ND	U	1
	LACTIC ACID	0.4	J	1	0.9	J	1	0.8		1	0.8	J	1
	PROPIONIC ACID	16.6		10	ND	U	1	ND		1	ND	U	1
	PYRUVIC ACID	ND	U	1	ND	U	1	ND		1	ND	U	1
	VALERIC ACID	ND	U	1	ND	U	1	ND		1	ND	U	1
Dissolved Metals (mg/L) EPA Method 6010	IRON	3.6		0.05	4		0.05	5.1		0.05	5		0.05
	MANGANESE	7.7		0.003	6.8		0.003	7.1		0.003	6.4		0.003
δ2H (‰) Mass Spectrometry, USGS Reston, VA	DELTA2H	NS	--	--	NS	--	--	NS	--	--	NS	--	--
CSIA EDB δ13C ‰) Kuder et al, 2012	EDB δ	NS	--	--	NS	--	--	NS	--	--	NS	--	--
VOCs (µg/L) EPA Method 8260	1,1,2-TRICHLOROETHANE	ND	U	25	ND	U	25	ND		50	ND		50
	1,2,4-TRIMETHYLBENZENE	350		50	380		50	470		100	420		100
	1,2-DIBROMOETHANE	ND	U	50	ND	U	50	ND		100	ND		100
	1,2-DICHLOROETHANE	ND	U	50	ND	U	50	NA	--	--	NA	--	--
	1,3,5-TRIMETHYLBENZENE	120		25	140		25	160		50	140		50
	2-BUTANONE	ND	U	500	ND	U	500	ND		1000	ND		1000
	2-CHLOROTOLUENE	ND	U	25	ND	U	25	ND		50	ND		50
	2-HEXANONE	ND	U	250	ND	U	250	ND		500	ND		500
	4-METHYL-2-PENTANONE	ND	U	250	ND	U	250	ND		500	ND		500
	ACETONE	ND	U	500	ND	U	500	ND		1000	ND		1000
	BENZENE	3300		50	3200		50	3400		100	3200		100
	CARBON DISULFIDE	ND	U	100	ND	U	100	ND		200	ND		200
	CHLOROMETHANE	ND	U	50	ND	U	50	ND		100	ND		100
	DICHLORODIFLUOROMETHANE	ND	U	50	ND	U	50	NA	--	--	NA	--	--
	ETHYLBENZENE	110		50	1800		50	NA	--	--	NA	--	--
	ISOPROPYLBENZENE	100		50	190		50	230		100	210		100
	METHYL TERT-BUTYL ETHER	ND	U	25	ND	U	25	ND		50	ND		50
	METHYLENE CHLORIDE	ND	U	250	ND	U	250	ND		500	ND		500
	NAPHTHALENE	140	J	250	140	J	250	ND		500	ND		500
	N-BUTYLBENZENE	ND	U	50	ND	U	50	ND		100	ND		100
	N-PROPYLBENZENE	95		50	120		50	160		100	130		100
	P-ISOPROPYLTOLUENE	68		50	52		50	ND		100	ND		100
	SEC-BUTYLBENZENE	ND	U	50	ND	U	50	ND		100	ND		100
	TERT-BUTYLBENZENE	ND	U	50	ND	U	50	ND		100	ND		100
	TOLUENE	11000		100	11000		100	990		100	930		100
	TRICHLOROETHENE	ND	U	50	ND	U	50	ND		100	ND		100
	TRICHLOROFLUOROMETHANE	ND	U	50	ND	U	50	ND		100	ND		100
	XYLENES	3600		25	5500		25	5000		50	4500		50

Notes:

a. EPA analytical methods listed are for the most recent sampling event.

b. Samples were collected using Geotech Bladder Pumps.

c. Samples were recollected (except for QuantArray-Chlor analysis) using replacement QED Bladder Pumps.

-- = Not applicable.

δ2H - Delta Deuterium.

0/00 - Per mille.

cells/mL = Cells per milliliter.

EPA = Environmental Protection Agency.

FD = Field duplicate.

ID = Identification.

J = Estimated value, concentration is less than LOQ but greater than laboratory method detection limit (DL).

J+ = Estimated value, concentration is less than LOQ but greater than laboratory method detection limit (DL); biased high.

J- = Estimated value, concentration is less than LOQ but greater than laboratory method detection limit (DL); biased low.

KAFB = Kirtland Air Force Base.

LOQ = Limit of Quantitation

µg/L = Microgram per liter.

mg/L = Milligram per liter.

NA = Not analyzed.

ND = Not detected.

NS = Not sampled.

REG = Regular/parent sample.

U = Analyte was not detected. The reported numerical value is at or below the LOQ.

UJ = Analyte was not detected. The reported value is estimated.

VAL QUAL = Validation qualifier.

VFA - Volatile fatty acid.

VOC = Volatile organic compound.

Table 9
Groundwater Analytical Results for KAFB-106EX1

	Phase Designation	Original Baseline[b]			New Baseline - QED Pumps[c]			Phase 1 Recirculation						Phase 1 Recirculation					
	Sample ID	106EX1-BL-062917			106EX1-BL-092617			106EX1-P1R-100417			106EX1-P1R-100617			106EX1-P1R-100917			106EX1-P1R-101217		
	Sample Date	6/29/2017			9/26/2017			10/4/2017			10/6/2017			10/9/2017			10/12/2017		
	Sample Pupose	REG			REG			REG			REG			REG			REG		
Chemical Class and Analytical Method[a]	Parameter	Result	Val Qual	LOQ	Result	Val Qual	LOQ	Result	Val Qual	LOQ	Result	Val Qual	LOQ	Result	Val Qual	LOQ	Result	Val Qual	LOQ
Microbial Community (cells/mL) QuantArray-Chlor	1,1 DCA Reductase (DCA)	ND	U	4.9	NS	--	--	NS	--	--	NS	--	--	NS	--	--	NS	--	--
	1,2 DCA Reductase (DCAR)	ND	U	4.9	NS	--	--	NS	--	--	NS	--	--	NS	--	--	NS	--	--
	BAV1 Vinyl Chloride Reductase (BVC)	ND	U	0.5	NS	--	--	NS	--	--	NS	--	--	NS	--	--	NS	--	--
	Chloroform Reductase (CFR)	ND	U	4.9	NS	--	--	NS	--	--	NS	--	--	NS	--	--	NS	--	--
	Dehalobacter DCM (DCM)	ND	U	4.9	NS	--	--	NS	--	--	NS	--	--	NS	--	--	NS	--	--
	Dehalobacter spp. (DHBt)	87400		4.9	NS	--	--	NS	--	--	NS	--	--	NS	--	--	NS	--	--
	Dehalobium chlorocoercia (DECO)	18700		4.9	NS	--	--	NS	--	--	NS	--	--	NS	--	--	NS	--	--
	Dehalococcoides (DHC)	ND	U	0.5	NS	--	--	NS	--	--	NS	--	--	NS	--	--	NS	--	--
	Dehalogenimonas spp. (DHG)	ND	U	4.9	NS	--	--	NS	--	--	NS	--	--	NS	--	--	NS	--	--
	Desulfitobacterium spp. (DSB)	370000		4.9	NS	--	--	NS	--	--	NS	--	--	NS	--	--	NS	--	--
	Desulfuromonas spp. (DSM)	6.3		4.9	NS	--	--	NS	--	--	NS	--	--	NS	--	--	NS	--	--
	Dichloromethane Dehalogenase (DCMA)	ND	U	4.9	NS	--	--	NS	--	--	NS	--	--	NS	--	--	NS	--	--
	Epoxyalkane Transferase (EtnE)	2480		4.9	NS	--	--	NS	--	--	NS	--	--	NS	--	--	NS	--	--
	Ethene Monooxygenase (EtnC)	ND	U	4.9	NS	--	--	NS	--	--	NS	--	--	NS	--	--	NS	--	--
	Methanogens (MGN)	742		4.9	NS	--	--	NS	--	--	NS	--	--	NS	--	--	NS	--	--
	PCE Reductase (PCE-1)	NS	--	--	NS	--	--	NS	--	--	NS	--	--	NS	--	--	NS	--	--
	Phenol Hydroxylase (PHE)	143000		4.9	NS	--	--	NS	--	--	NS	--	--	NS	--	--	NS	--	--
	PMMO	88.3		4.9	NS	--	--	NS	--	--	NS	--	--	NS	--	--	NS	--	--
	Soluble Methane Monooxygenase (SMMO)	3850		4.9	NS	--	--	NS	--	--	NS	--	--	NS	--	--	NS	--	--
	Sulfate Reducing Bacteria (APS)	119000		4.9	NS	--	--	NS	--	--	NS	--	--	NS	--	--	NS	--	--
	tceA Reductase (TCE)	ND	U	0.5	NS	--	--	NS	--	--	NS	--	--	NS	--	--	NS	--	--
	Toluene Dioxygenase (TOD)	51.4		4.9	NS	--	--	NS	--	--	NS	--	--	NS	--	--	NS	--	--
	Toluene Monooxygenase (RMO)	404000		4.9	NS	--	--	NS	--	--	NS	--	--	NS	--	--	NS	--	--
	Toluene Monooxygenase 2 (RDEG)	114000		4.9	NS	--	--	NS	--	--	NS	--	--	NS	--	--	NS	--	--
	Total Eubacteria (EBAC)	959000		4.9	NS	--	--	NS	--	--	NS	--	--	NS	--	--	NS	--	--
	trans-1,2-DCE Reductase (TDR)	NS	--	--	NS	--	--	NS	--	--	NS	--	--	NS	--	--	NS	--	--
	Trichlorobenzene Dioxygenase (TCBO)	ND	U	4.9	NS	--	--	NS	--	--	NS	--	--	NS	--	--	NS	--	--
	Vinyl Chloride Reductase (VCR)	ND	U	0.5	NS	--	--	NS	--	--	NS	--	--	NS	--	--	NS	--	--
EDB (µg/L) EPA Method 8011	1,2-DIBROMOETHANE	28.5		1.89	31.3	J+	1.94	NS	--	--	NS	--	--	NS	--	--	NS	--	--
Fluorometric (µg/L) Spectrofluorophotometry	FLUORESCEIN	ND	U	0.01	ND	U	0.01	ND	U	0.01	ND	U	0.01	ND	U	0.01	0.009		0.01
Reduced Gases (µg/L) RSKSOP-175	ACETYLENE	ND	U	10	ND	U	10	NS	--	--	NS	--	--	NS	--	--	NS	--	--
	ETHANE	0.67	J	4	ND	U	4	NS	--	--	NS	--	--	NS	--	--	NS	--	--
	ETHYLENE	1.13	J	5	3.08	J	5	NS	--	--	NS	--	--	NS	--	--	NS	--	--
	METHANE	2.61		2	14.3		2	NS	--	--	NS	--	--	NS	--	--	NS	--	--
	PROPANE	ND	U	6	ND	U	6	NS	--	--	NS	--	--	NS	--	--	NS	--	--
General Chemistry (mg/L) SM2320b, EPA Method 300, EPA Method 353.2, SM4500 PE	ALKALINITY	246		1	313		1	NS	--	--	NS	--	--	NS	--	--	NS	--	--
	BROMIDE	0.373	J-	0.125	0.0952	J	0.25	NS	--	--	NS	--	--	NS	--	--	NS	--	--
	CHLORIDE	12.3		0.33	12.5		0.66	NS	--	--	NS	--	--	NS	--	--	NS	--	--
	IODIDE	ND	U	0.2	ND	U	0.75	NS	--	--	NS	--	--	NS	--	--	NS	--	--
	NITRATE	NS	--	--	NS	--	--	NS	--	--	NS	--	--	NS	--	--	NS	--	--
	NITRITE	NS	--	--	NS	--	--	NS	--	--	NS	--	--	NS	--	--	NS	--	--
	NITROGEN, NITRATE-NITRITE	ND	U	0.375	ND	U	0.375	NS	--	--	NS	--	--	NS	--	--	NS	--	--
	O-PHOSPHATE (AS P)	0.0958		0.02	0.219	J+	0.02	NS	--	--	NS	--	--	NS	--	--	NS	--	--
	SULFATE	7.48		1	2.05	J	2	NS	--	--	NS	--	--	NS	--	--	NS	--	--

Table 9
Groundwater Analytical Results for KAFB-106EX1

	Phase Designation	Original Baseline[b]			New Baseline - QED Pumps[c]			Phase 1 Recirculation						Phase 1 Recirculation					
	Sample ID	106EX1-BL-062917			106EX1-BL-092617			106EX1-P1R-100417			106EX1-P1R-100617			106EX1-P1R-100917			106EX1-P1R-101217		
	Sample Date	6/29/2017			9/26/2017			10/4/2017			10/6/2017			10/9/2017			10/12/2017		
	Sample Pupose	REG			REG			REG			REG			REG			REG		
Chemical Class and Analytical Method[a]	Parameter	Result	Val Qual	LOQ	Result	Val Qual	LOQ	Result	Val Qual	LOQ	Result	Val Qual	LOQ	Result	Val Qual	LOQ	Result	Val Qual	LOQ
VFAs (mg/L) EPA Method 300m	ACETIC ACID	ND	U	1	4.51		1	NS	--	--	NS	--	--	NS	--	--	NS	--	--
	BUTYRIC ACID	ND	U	1	ND	U	1	NS	--	--	NS	--	--	NS	--	--	NS	--	--
	FORMIC ACID	ND	U	1	ND	U	1	NS	--	--	NS	--	--	NS	--	--	NS	--	--
	LACTIC ACID	ND	U	1	ND	U	1	NS	--	--	NS	--	--	NS	--	--	NS	--	--
	PROPIONIC ACID	ND	U	1	ND	U	1	NS	--	--	NS	--	--	NS	--	--	NS	--	--
	PYRUVIC ACID	ND	U	1	ND	U	1	NS	--	--	NS	--	--	NS	--	--	NS	--	--
	VALERIC ACID	ND	U	1	ND	U	1	NS	--	--	NS	--	--	NS	--	--	NS	--	--
Dissolved Metals (mg/L) EPA Method 6010	IRON	1.33		0.06	5.36		0.06	NS	--	--	NS	--	--	NS	--	--	NS	--	--
	MANGANESE	1.89		0.006	3.07		0.006	NS	--	--	NS	--	--	NS	--	--	NS	--	--
δ2H (‰) Mass Spectrometry, USGS Reston, VA	DELTA2H	-94.24		-99	-94.04		-99	-94.57		-99	-95.56		-99	-95.92		-99	-95		-99
CSIA EDB δ13C ‰) Kuder et al, 2012	EDB δ	NA	--	--	-9.0 ±2‰	--	--	NS	--	--	NS	--	--	NS	--	--	NS	--	--
VOCs (µg/L) EPA Method 8260	1,1,2-TRICHLOROETHANE	ND	U	25	ND	U	50	NS	--	--	NS	--	--	NS	--	--	NS	--	--
	1,2,4-TRIMETHYLBENZENE	167		25	215		50	NS	--	--	NS	--	--	NS	--	--	NS	--	--
	1,2-DIBROMOETHANE	32.3	J	25	40.1	J	50	NS	--	--	NS	--	--	NS	--	--	NS	--	--
	1,2-DICHLOROETHANE	ND	U	25	ND	U	50	NS	--	--	NS	--	--	NS	--	--	NS	--	--
	1,3,5-TRIMETHYLBENZENE	55.2		25	69.6	J	50	NS	--	--	NS	--	--	NS	--	--	NS	--	--
	2-BUTANONE	215	J	250	287	J	500	NS	--	--	NS	--	--	NS	--	--	NS	--	--
	2-CHLOROTOLUENE	ND	U	25	ND	U	50	NS	--	--	NS	--	--	NS	--	--	NS	--	--
	2-HEXANONE	153	J	125	239	J	250	NS	--	--	NS	--	--	NS	--	--	NS	--	--
	4-METHYL-2-PENTANONE	62.8	J	125	ND	U	250	NS	--	--	NS	--	--	NS	--	--	NS	--	--
	ACETONE	673		250	951	J	500	NS	--	--	NS	--	--	NS	--	--	NS	--	--
	BENZENE	1100		25	2090		50	NS	--	--	NS	--	--	NS	--	--	NS	--	--
	CARBON DISULFIDE	ND	U	25	27.2	J	50	NS	--	--	NS	--	--	NS	--	--	NS	--	--
	CHLOROMETHANE	ND	U	25	ND	U	50	NS	--	--	NS	--	--	NS	--	--	NS	--	--
	DICHLORODIFLUOROMETHANE	ND	U	50	ND	U	100	NS	--	--	NS	--	--	NS	--	--	NS	--	--
	ETHYLBENZENE	526		25	797		50	NS	--	--	NS	--	--	NS	--	--	NS	--	--
	ISOPROPYLBENZENE	36	J+	25	58	J	50	NS	--	--	NS	--	--	NS	--	--	NS	--	--
	METHYL TERT-BUTYL ETHER	ND	U	25	ND	U	50	NS	--	--	NS	--	--	NS	--	--	NS	--	--
	METHYLENE CHLORIDE	ND	U	50	ND	U	100	NS	--	--	NS	--	--	NS	--	--	NS	--	--
	NAPHTHALENE	68.9	J+	25	114		50	NS	--	--	NS	--	--	NS	--	--	NS	--	--
	N-BUTYLBENZENE	ND	U	25	ND	U	50	NS	--	--	NS	--	--	NS	--	--	NS	--	--
	N-PROPYLBENZENE	46.6	J	25	61.7	J	50	NS	--	--	NS	--	--	NS	--	--	NS	--	--
	P-ISOPROPYLTOLUENE	ND	U	25	ND	U	50	NS	--	--	NS	--	--	NS	--	--	NS	--	--
	SEC-BUTYLBENZENE	ND	U	25	ND	U	50	NS	--	--	NS	--	--	NS	--	--	NS	--	--
	TERT-BUTYLBENZENE	ND	U	25	ND	U	50	NS	--	--	NS	--	--	NS	--	--	NS	--	--
	TOLUENE	4380		25	6300		50	NS	--	--	NS	--	--	NS	--	--	NS	--	--
	TRICHLOROETHENE	ND	U	25	ND	U	50	NS	--	--	NS	--	--	NS	--	--	NS	--	--
	TRICHLOROFLUOROMETHANE	ND	U	50	ND	U	100	NS	--	--	NS	--	--	NS	--	--	NS	--	--
	XYLENES	1690		75	2590		150	NS	--	--	NS	--	--	NS	--	--	NS	--	--

Notes:

a. EPA analytical methods listed are for the most recent sampling event.

b. Samples were collected using Geotech Bladder Pumps.

c. Samples were recollected (except for QuantArray-Chlor analysis) using replacement QED Bladder Pumps.

-- = Not applicable.

δ2H - Delta Deuterium.

0/00 - Per mille.

cells/mL = Cells per milliliter.

EPA = Environmental Protection Agency.

FD = Field duplicate.

ID = Identification.

J = Estimated value, concentration is less than LOQ but greater than laboratory method detection limit (DL).

J+ = Estimated value, concentration is less than LOQ but greater than laboratory method detection limit (DL); biased high.

J- = Estimated value, concentration is less than LOQ but greater than laboratory method detection limit (DL); biased low.

KAFB = Kirtland Air Force Base.

LOQ = Limit of Quantitation

µg/L = Microgram per liter.

mg/L = Milligram per liter.

NA = Not analyzed.

ND = Not detected.

NS = Not sampled.

REG = Regular/parent sample.

U = Analyte was not detected. The reported numerical value is at or below the LOQ.

UJ = Analyte was not detected. The reported value is estimated.

VAL QUAL = Validation qualifier.

VFA - Volatile fatty acid.

VOC = Volatile organic compound.

Table 9
Groundwater Analytical Results for KAFB-106EX1

	Phase Designation	Phase 1 Recirculation						Phase 1 Recirculation						Phase 1 Recirculation					
	Sample ID	106EX1-P1R-101617			106EX1-P1R-101617-FD			106EX1-P1R-102017			106EX1-P1R-102417			106EX1-P1R-102417-FD			106EX1-P1R-110117		
	Sample Date	10/16/2017			10/16/2017			10/20/2017			10/24/2017			10/24/2017			11/1/2017		
	Sample Pupose	REG			FD			REG			REG			FD			REG		
Chemical Class and Analytical Method[a]	Parameter	Result	Val Qual	LOQ	Result	Val Qual	LOQ	Result	Val Qual	LOQ	Result	Val Qual	LOQ	Result	Val Qual	LOQ	Result	Val Qual	LOQ
Microbial Community (cells/mL) QuantArray-Chlor	1,1 DCA Reductase (DCA)	NS	--	--	NS	--	--	NS	--	--	NS	--	--	NS	--	--	NS	--	--
	1,2 DCA Reductase (DCAR)	NS	--	--	NS	--	--	NS	--	--	NS	--	--	NS	--	--	NS	--	--
	BAV1 Vinyl Chloride Reductase (BVC)	NS	--	--	NS	--	--	NS	--	--	NS	--	--	NS	--	--	NS	--	--
	Chloroform Reductase (CFR)	NS	--	--	NS	--	--	NS	--	--	NS	--	--	NS	--	--	NS	--	--
	Dehalobacter DCM (DCM)	NS	--	--	NS	--	--	NS	--	--	NS	--	--	NS	--	--	NS	--	--
	Dehalobacter spp. (DHBt)	NS	--	--	NS	--	--	NS	--	--	NS	--	--	NS	--	--	NS	--	--
	Dehalobium chlorocoercia (DECO)	NS	--	--	NS	--	--	NS	--	--	NS	--	--	NS	--	--	NS	--	--
	Dehalococcoides (DHC)	NS	--	--	NS	--	--	NS	--	--	NS	--	--	NS	--	--	NS	--	--
	Dehalogenimonas spp. (DHG)	NS	--	--	NS	--	--	NS	--	--	NS	--	--	NS	--	--	NS	--	--
	Desulfitobacterium spp. (DSB)	NS	--	--	NS	--	--	NS	--	--	NS	--	--	NS	--	--	NS	--	--
	Desulfuromonas spp. (DSM)	NS	--	--	NS	--	--	NS	--	--	NS	--	--	NS	--	--	NS	--	--
	Dichloromethane Dehalogenase (DCMA)	NS	--	--	NS	--	--	NS	--	--	NS	--	--	NS	--	--	NS	--	--
	Epoxyalkane Transferase (EtnE)	NS	--	--	NS	--	--	NS	--	--	NS	--	--	NS	--	--	NS	--	--
	Ethene Monooxygenase (EtnC)	NS	--	--	NS	--	--	NS	--	--	NS	--	--	NS	--	--	NS	--	--
	Methanogens (MGN)	NS	--	--	NS	--	--	NS	--	--	NS	--	--	NS	--	--	NS	--	--
	PCE Reductase (PCE-1)	NS	--	--	NS	--	--	NS	--	--	NS	--	--	NS	--	--	NS	--	--
	Phenol Hydroxylase (PHE)	NS	--	--	NS	--	--	NS	--	--	NS	--	--	NS	--	--	NS	--	--
	PMMO	NS	--	--	NS	--	--	NS	--	--	NS	--	--	NS	--	--	NS	--	--
	Soluble Methane Monooxygenase (SMMO)	NS	--	--	NS	--	--	NS	--	--	NS	--	--	NS	--	--	NS	--	--
	Sulfate Reducing Bacteria (APS)	NS	--	--	NS	--	--	NS	--	--	NS	--	--	NS	--	--	NS	--	--
	tceA Reductase (TCE)	NS	--	--	NS	--	--	NS	--	--	NS	--	--	NS	--	--	NS	--	--
	Toluene Dioxygenase (TOD)	NS	--	--	NS	--	--	NS	--	--	NS	--	--	NS	--	--	NS	--	--
	Toluene Monooxygenase (RMO)	NS	--	--	NS	--	--	NS	--	--	NS	--	--	NS	--	--	NS	--	--
	Toluene Monooxygenase 2 (RDEG)	NS	--	--	NS	--	--	NS	--	--	NS	--	--	NS	--	--	NS	--	--
	Total Eubacteria (EBAC)	NS	--	--	NS	--	--	NS	--	--	NS	--	--	NS	--	--	NS	--	--
	trans-1,2-DCE Reductase (TDR)	NS	--	--	NS	--	--	NS	--	--	NS	--	--	NS	--	--	NS	--	--
	Trichlorobenzene Dioxygenase (TCBO)	NS	--	--	NS	--	--	NS	--	--	NS	--	--	NS	--	--	NS	--	--
	Vinyl Chloride Reductase (VCR)	NS	--	--	NS	--	--	NS	--	--	NS	--	--	NS	--	--	NS	--	--
EDB (µg/L) EPA Method 8011	1,2-DIBROMOETHANE	NS	--	--	NS	--	--	NS	--	--	53.6		1.92	50.4		1.9	NS	--	--
Fluorometric (µg/L) Spectrofluorophotometry	FLUORESCEIN	0.735		0.01	0.773		0.01	1.847		0.01	2.625		0.01	NS	--	--	3.733		0.01
Reduced Gases (µg/L) RSKSOP-175	ACETYLENE	NS	--	--	NS	--	--	NS	--	--	ND	U	10	ND	U	10	NS	--	--
	ETHANE	NS	--	--	NS	--	--	NS	--	--	ND	U	4	ND	U	4	NS	--	--
	ETHYLENE	NS	--	--	NS	--	--	NS	--	--	3.07	J	5	3.53	J	5	NS	--	--
	METHANE	NS	--	--	NS	--	--	NS	--	--	1.02	J	2	1.2	J	2	NS	--	--
	PROPANE	NS	--	--	NS	--	--	NS	--	--	ND	U	6	ND	U	6	NS	--	--
General Chemistry (mg/L) SM2320b, EPA Method 300, EPA Method 353.2, SM4500 PE	ALKALINITY	NS	--	--	NS	--	--	NS	--	--	267		1	268		1	NS	--	--
	BROMIDE	NS	--	--	NS	--	--	NS	--	--	0.264		0.125	0.257		0.125	NS	--	--
	CHLORIDE	NS	--	--	NS	--	--	NS	--	--	15.4		0.33	15.5		0.33	NS	--	--
	IODIDE	NS	--	--	NS	--	--	NS	--	--	ND	U	0.75	ND	U	0.75	NS	--	--
	NITRATE	NS	--	--	NS	--	--	NS	--	--	NS	--	--	NS	--	--	NS	--	--
	NITRITE	NS	--	--	NS	--	--	NS	--	--	NS	--	--	NS	--	--	NS	--	--
	NITROGEN, NITRATE-NITRITE	NS	--	--	NS	--	--	NS	--	--	ND	U	0.375	ND	U	0.375	NS	--	--
	O-PHOSPHATE (AS P)	NS	--	--	NS	--	--	NS	--	--	ND	U	0.02	ND	U	0.02	NS	--	--
	SULFATE	NS	--	--	NS	--	--	NS	--	--	14.6		1	14.3		1	NS	--	--

Table 9
Groundwater Analytical Results for KAFB-106EX1

	Phase Designation	Phase 1 Recirculation						Phase 1 Recirculation						Phase 1 Recirculation					
	Sample ID	106EX1-P1R-101617			106EX1-P1R-101617-FD			106EX1-P1R-102017			106EX1-P1R-102417			106EX1-P1R-102417-FD			106EX1-P1R-110117		
	Sample Date	10/16/2017			10/16/2017			10/20/2017			10/24/2017			10/24/2017			11/1/2017		
	Sample Pupose	REG			FD			REG			REG			FD			REG		
Chemical Class and Analytical Method[a]	Parameter	Result	Val Qual	LOQ	Result	Val Qual	LOQ	Result	Val Qual	LOQ	Result	Val Qual	LOQ	Result	Val Qual	LOQ	Result	Val Qual	LOQ
VFAs (mg/L) EPA Method 300m	ACETIC ACID	NS	--	--	NS	--	--	NS	--	--	ND	U	1	ND	U	1	NS	--	--
	BUTYRIC ACID	NS	--	--	NS	--	--	NS	--	--	ND	U	1	ND	U	1	NS	--	--
	FORMIC ACID	NS	--	--	NS	--	--	NS	--	--	ND	U	1	ND	U	1	NS	--	--
	LACTIC ACID	NS	--	--	NS	--	--	NS	--	--	ND	U	1	ND	U	1	NS	--	--
	PROPIONIC ACID	NS	--	--	NS	--	--	NS	--	--	ND	U	1	ND	U	1	NS	--	--
	PYRUVIC ACID	NS	--	--	NS	--	--	NS	--	--	ND	U	1	ND	U	1	NS	--	--
	VALERIC ACID	NS	--	--	NS	--	--	NS	--	--	ND	U	1	ND	U	1	NS	--	--
Dissolved Metals (mg/L) EPA Method 6010	IRON	NS	--	--	NS	--	--	NS	--	--	0.248		0.06	0.25		0.06	NS	--	--
	MANGANESE	NS	--	--	NS	--	--	NS	--	--	1.57		0.006	1.59		0.006	NS	--	--
δ2H (‰) Mass Spectrometry, USGS Reston, VA	DELTA2H	-92.41		-99	-92.76		-99	-92.35		-99	-93.32		-99	-94.31		-99	-89.6		-99
CSIA EDB δ13C ‰) Kuder et al, 2012	EDB δ	NS	--	--	NS	--	--	NS	--	--	NS	--	--	NS	--	--	NS	--	--
VOCs (µg/L) EPA Method 8260	1,1,2-TRICHLOROETHANE	NS	--	--	NS	--	--	NS	--	--	ND	U	25	ND	U	25	NS	--	--
	1,2,4-TRIMETHYLBENZENE	NS	--	--	NS	--	--	NS	--	--	255		25	220		25	NS	--	--
	1,2-DIBROMOETHANE	NS	--	--	NS	--	--	NS	--	--	57.6		25	67.8		25	NS	--	--
	1,2-DICHLOROETHANE	NS	--	--	NS	--	--	NS	--	--	ND	U	25	ND	U	25	NS	--	--
	1,3,5-TRIMETHYLBENZENE	NS	--	--	NS	--	--	NS	--	--	92.3		25	81.2		25	NS	--	--
	2-BUTANONE	NS	--	--	NS	--	--	NS	--	--	ND	U	250	148	J	250	NS	--	--
	2-CHLOROTOLUENE	NS	--	--	NS	--	--	NS	--	--	ND	U	25	ND	U	25	NS	--	--
	2-HEXANONE	NS	--	--	NS	--	--	NS	--	--	103	J	125	106	J	125	NS	--	--
	4-METHYL-2-PENTANONE	NS	--	--	NS	--	--	NS	--	--	ND	U	125	68.6	J	125	NS	--	--
	ACETONE	NS	--	--	NS	--	--	NS	--	--	719		250	853		250	NS	--	--
	BENZENE	NS	--	--	NS	--	--	NS	--	--	2910		25	2680		25	NS	--	--
	CARBON DISULFIDE	NS	--	--	NS	--	--	NS	--	--	ND	U	25	ND	U	25	NS	--	--
	CHLOROMETHANE	NS	--	--	NS	--	--	NS	--	--	ND	U	25	ND	U	25	NS	--	--
	DICHLORODIFLUOROMETHANE	NS	--	--	NS	--	--	NS	--	--	ND	U	50	ND	U	50	NS	--	--
	ETHYLBENZENE	NS	--	--	NS	--	--	NS	--	--	688		25	620		25	NS	--	--
	ISOPROPYLBENZENE	NS	--	--	NS	--	--	NS	--	--	61.4		25	53		25	NS	--	--
	METHYL TERT-BUTYL ETHER	NS	--	--	NS	--	--	NS	--	--	ND	U	25	ND	U	25	NS	--	--
	METHYLENE CHLORIDE	NS	--	--	NS	--	--	NS	--	--	ND	U	50	ND	U	50	NS	--	--
	NAPHTHALENE	NS	--	--	NS	--	--	NS	--	--	72.4		25	68.6		25	NS	--	--
	N-BUTYLBENZENE	NS	--	--	NS	--	--	NS	--	--	14.6	J	25	12.9	J	25	NS	--	--
	N-PROPYLBENZENE	NS	--	--	NS	--	--	NS	--	--	63.9		25	58.1		25	NS	--	--
	P-ISOPROPYLTOLUENE	NS	--	--	NS	--	--	NS	--	--	ND	U	25	13.5	J	25	NS	--	--
	SEC-BUTYLBENZENE	NS	--	--	NS	--	--	NS	--	--	ND	U	25	13.5	J	25	NS	--	--
	TERT-BUTYLBENZENE	NS	--	--	NS	--	--	NS	--	--	ND	U	25	ND	U	25	NS	--	--
	TOLUENE	NS	--	--	NS	--	--	NS	--	--	5610		25	5060		25	NS	--	--
	TRICHLOROETHENE	NS	--	--	NS	--	--	NS	--	--	ND	U	25	ND	U	25	NS	--	--
	TRICHLOROFLUOROMETHANE	NS	--	--	NS	--	--	NS	--	--	ND	U	50	ND	U	50	NS	--	--
	XYLENES	NS	--	--	NS	--	--	NS	--	--	2470		75	2240		75	NS	--	--

Notes:

a. EPA analytical methods listed are for the most recent sampling event.

b. Samples were collected using Geotech Bladder Pumps.

c. Samples were recollected (except for QuantArray-Chlor analysis) using replacement QED Bladder Pumps.

-- = Not applicable.

δ2H - Delta Deuterium.

0/00 - Per mille.

cells/mL = Cells per milliliter.

EPA = Environmental Protection Agency.

FD = Field duplicate.

ID = Identification.

J = Estimated value, concentration is less than LOQ but greater than laboratory method detection limit (DL).

J+ = Estimated value, concentration is less than LOQ but greater than laboratory method detection limit (DL); biased high.

J- = Estimated value, concentration is less than LOQ but greater than laboratory method detection limit (DL); biased low.

KAFB = Kirtland Air Force Base.

LOQ = Limit of Quantitation

µg/L = Microgram per liter.

mg/L = Milligram per liter.

NA = Not analyzed.

ND = Not detected.

NS = Not sampled.

REG = Regular/parent sample.

U = Analyte was not detected. The reported numerical value is at or below the LOQ.

UJ = Analyte was not detected. The reported value is estimated.

VAL QUAL = Validation qualifier.

VFA - Volatile fatty acid.

VOC = Volatile organic compound.

Table 9
Groundwater Analytical Results for KAFB-106EX1

	Phase Designation	Phase 1 Passive						Phase 2 Recirculation						Phase 2 Recirculation					
	Sample ID	106EX1-P1P-111617			106EX1-P1P-112917			106EX1-P2R-011018			106EX1-P2R-011618			106EX1-P2R-011618-FD			106EX1-P2R-012518		
	Sample Date	11/16/2017			11/29/2017			1/10/2018			1/16/2018			1/16/2018			1/25/2018		
	Sample Pupose	REG			REG			REG			REG			FD			REG		
Chemical Class and Analytical Method[a]	Parameter	Result	Val Qual	LOQ	Result	Val Qual	LOQ	Result	Val Qual	LOQ	Result	Val Qual	LOQ	Result	Val Qual	LOQ	Result	Val Qual	LOQ
Microbial Community (cells/mL) QuantArray-Chlor	1,1 DCA Reductase (DCA)	NS	--	--	ND	U	6.6	NS	--	--	NS	--	--	NS	--	--	ND	U	7.5
	1,2 DCA Reductase (DCAR)	NS	--	--	ND	U	6.6	NS	--	--	NS	--	--	NS	--	--	ND	U	7.5
	BAV1 Vinyl Chloride Reductase (BVC)	NS	--	--	ND	U	0.7	NS	--	--	NS	--	--	NS	--	--	ND	U	0.7
	Chloroform Reductase (CFR)	NS	--	--	ND	U	6.6	NS	--	--	NS	--	--	NS	--	--	ND	U	7.5
	Dehalobacter DCM (DCM)	NS	--	--	ND	U	6.6	NS	--	--	NS	--	--	NS	--	--	ND	U	7.5
	Dehalobacter spp. (DHBt)	NS	--	--	125000		6.6	NS	--	--	NS	--	--	NS	--	--	118000		7.5
	Dehalobium chlorocoercia (DECO)	NS	--	--	7140		6.6	NS	--	--	NS	--	--	NS	--	--	15700		7.5
	Dehalococcoides (DHC)	NS	--	--	ND	U	0.7	NS	--	--	NS	--	--	NS	--	--	ND	U	0.7
	Dehalogenimonas spp. (DHG)	NS	--	--	ND	U	6.6	NS	--	--	NS	--	--	NS	--	--	ND	U	7.5
	Desulfitobacterium spp. (DSB)	NS	--	--	331000		6.6	NS	--	--	NS	--	--	NS	--	--	161000		7.5
	Desulfuromonas spp. (DSM)	NS	--	--	ND	U	6.6	NS	--	--	NS	--	--	NS	--	--	14.7		7.5
	Dichloromethane Dehalogenase (DCMA)	NS	--	--	ND	U	6.6	NS	--	--	NS	--	--	NS	--	--	ND	U	7.5
	Epoxyalkane Transferase (EtnE)	NS	--	--	138		6.6	NS	--	--	NS	--	--	NS	--	--	121		7.5
	Ethene Monooxygenase (EtnC)	NS	--	--	ND	U	6.6	NS	--	--	NS	--	--	NS	--	--	ND	U	7.5
	Methanogens (MGN)	NS	--	--	346		6.6	NS	--	--	NS	--	--	NS	--	--	4	J	7.5
	PCE Reductase (PCE-1)	NS	--	--	NS	--	--	NS	--	--	NS	--	--	NS	--	--	0.4	J	7.5
	Phenol Hydroxylase (PHE)	NS	--	--	22700		6.6	NS	--	--	NS	--	--	NS	--	--	100000		7.5
	PMMO	NS	--	--	2.7	J	6.6	NS	--	--	NS	--	--	NS	--	--	NS	--	--
	Soluble Methane Monooxygenase (SMMO)	NS	--	--	1630		6.6	NS	--	--	NS	--	--	NS	--	--	639		7.5
	Sulfate Reducing Bacteria (APS)	NS	--	--	89300		6.6	NS	--	--	NS	--	--	NS	--	--	111000		7.5
	tceA Reductase (TCE)	NS	--	--	ND	U	0.7	NS	--	--	NS	--	--	NS	--	--	ND	U	0.7
	Toluene Dioxygenase (TOD)	NS	--	--	22200		6.6	NS	--	--	NS	--	--	NS	--	--	ND	U	7.5
	Toluene Monooxygenase (RMO)	NS	--	--	373000		6.6	NS	--	--	NS	--	--	NS	--	--	115000		7.5
	Toluene Monooxygenase 2 (RDEG)	NS	--	--	227000		6.6	NS	--	--	NS	--	--	NS	--	--	35500		7.5
	Total Eubacteria (EBAC)	NS	--	--	7680000		6.6	NS	--	--	NS	--	--	NS	--	--	17500000		7.5
	trans-1,2-DCE Reductase (TDR)	NS	--	--	NS	--	--	NS	--	--	NS	--	--	NS	--	--	ND	U	7.5
	Trichlorobenzene Dioxygenase (TCBO)	NS	--	--	157		6.6	NS	--	--	NS	--	--	NS	--	--	210		7.5
	Vinyl Chloride Reductase (VCR)	NS	--	--	ND	U	0.7	NS	--	--	NS	--	--	NS	--	--	ND	U	
EDB (µg/L) EPA Method 8011	1,2-DIBROMOETHANE	21		3.81	12.9		1.87	25.7		1.88	62.2		1.91	80		1.91	69.7	J+	1.91
Fluorometric (µg/L) Spectrofluorophotometry	FLUORESCEIN	3.947		0.01	5.251		0.01	NS	--	--	NS	--	--	NS	--	--	NS	--	--
Reduced Gases (µg/L) RSKSOP-175	ACETYLENE	ND	U	10	ND	U	10	ND	U	10	ND	U	10	ND	U	10	ND	U	10
	ETHANE	ND	U	4	ND	U	4	1.74	J	4	2.66	J	4	2.71	J	4	2.36	J	4
	ETHYLENE	2.77	J	5	5.17		5	6.91		5	8.34		5	7.83		5	9.04		5
	METHANE	0.81	J	2	2.49		2	2.33		2	2.92		2	2.78		2	3.51		2
	PROPANE	ND	U	6	ND	U	6	ND	U	6	2.68	J	6	2.61	J	6	3.04	J	6
General Chemistry (mg/L) SM2320b, EPA Method 300, EPA Method 353.2, SM4500 PE	ALKALINITY	246		1	264		1	281	J-	1	280		1	294		1	291		1
	BROMIDE	0.327		0.125	0.395		0.125	0.366	J-	0.125	0.403		0.125	0.383	J	0.25	0.363		0.125
	CHLORIDE	18.5		0.33	20.7		0.33	25.8		0.33	29.6		0.33	29.1		0.66	26.6		0.33
	IODIDE	ND	U	0.75	ND	U	0.75	0.25	J	0.75	0.58	J	0.75	0.59	J	0.75	1.3		0.75
	NITRATE	NS	--	--	NS	--	--	NS	--	--	NS	--	--	NS	--	--	NS	--	--
	NITRITE	NS	--	--	NS	--	--	NS	--	--	NS	--	--	NS	--	--	NS	--	--
	NITROGEN, NITRATE-NITRITE	ND	U	0.375	ND	U	0.375	ND	U	0.375	ND	U	0.375	ND	U	0.375	ND	U	0.375
	O-PHOSPHATE (AS P)	0.0153	J	0.02	ND	U	0.02	0.0136	J	0.02	ND	U	0.02	ND	U	0.02	0.0354	J	0.02
	SULFATE	10.1		1	9.82		1	8.43	J+	1	7.21		1	7.15		2	7.03		1

Table 9
Groundwater Analytical Results for KAFB-106EX1

	Phase Designation	Phase 1 Passive						Phase 2 Recirculation						Phase 2 Recirculation					
	Sample ID	106EX1-P1P-111617			106EX1-P1P-112917			106EX1-P2R-011018			106EX1-P2R-011618			106EX1-P2R-011618-FD			106EX1-P2R-012518		
	Sample Date	11/16/2017			11/29/2017			1/10/2018			1/16/2018			1/16/2018			1/25/2018		
	Sample Pupose	REG			REG			REG			REG			FD			REG		
Chemical Class and Analytical Method[a]	Parameter	Result	Val Qual	LOQ	Result	Val Qual	LOQ	Result	Val Qual	LOQ	Result	Val Qual	LOQ	Result	Val Qual	LOQ	Result	Val Qual	LOQ
VFAs (mg/L) EPA Method 300m	ACETIC ACID	7.65		1	10.1		1	3.53		1	4.45		1	5.75		1	20.2		1
	BUTYRIC ACID	ND	U	1	ND	U	1	ND	U	1	ND	U	1	ND	U	1	ND	U	1
	FORMIC ACID	ND	U	1	ND	U	1	ND	U	1	ND	U	1	ND	U	1	ND	U	1
	LACTIC ACID	ND	U	1	ND	U	1	1.97		1	0.75	J	1	0.93	J	1	1.4		1
	PROPIONIC ACID	ND	U	1	ND	U	1	0.88	J	1	0.32	J	1	0.73	J	1	2.58		1
	PYRUVIC ACID	ND	U	1	ND	U	1	ND	U	1	ND	U	1	ND	U	1	ND	U	1
	VALERIC ACID	ND	U	1	ND	U	1	ND	U	1	ND	U	1	ND	U	1	ND	U	1
Dissolved Metals (mg/L) EPA Method 6010	IRON	1.45		0.06	1.63		0.06	0.521		0.06	0.535		0.06	0.518		0.06	0.548	J-	0.06
	MANGANESE	1.94		0.006	2.27		0.006	2.33		0.006	2.49		0.006	2.46		0.006	2.39	J-	0.006
δ2H (‰) Mass Spectrometry, USGS Reston, VA	DELTA2H	-91.2		-99	-88.51		-99	NS	--	--	NS	--	--	NS	--	--	NS	--	--
CSIA EDB δ13C ‰) Kuder et al, 2012	EDB δ	NS	--	--	-7.2±2‰	--	--	NS	--	--	NS	--	--	NS	--	--	-9.7 ±2‰	--	--
VOCs (µg/L) EPA Method 8260	1,1,2-TRICHLOROETHANE	ND	U	50	ND	U	25	ND	U	50	ND	U	50	ND	U	50	ND	U	50
	1,2,4-TRIMETHYLBENZENE	169		50	161		25	257		50	325		50	300		50	345		50
	1,2-DIBROMOETHANE	ND	U	50	21.9	J	25	51.7	J	50	51	J	50	45.8	J	50	45.4	J	50
	1,2-DICHLOROETHANE	ND	U	50	ND	U	25	ND	U	50	ND	U	50	ND	U	50	ND	U	50
	1,3,5-TRIMETHYLBENZENE	60.2	J	50	59.1		25	92.9	J	50	114		50	104		50	118		50
	2-BUTANONE	ND	U	500	ND	U	250	ND	U	500	ND	U	500	ND	U	500	ND	U	500
	2-CHLOROTOLUENE	ND	U	50	ND	U	25	ND	U	50	ND	U	50	ND	U	50	ND	U	50
	2-HEXANONE	ND	U	250	120	J	125	125	J	250	ND	U	250	ND	U	250	ND	U	250
	4-METHYL-2-PENTANONE	ND	U	250	75.5	J	125	ND	U	250	ND	U	250	ND	U	250	ND	U	250
	ACETONE	407	J-	500	375	J	250	493	J	500	356	J	500	356	J	500	ND	U	500
	BENZENE	1950		50	2080		25	3750		50	3940		50	3740		50	3950		50
	CARBON DISULFIDE	ND	U	50	ND	U	25	ND	U	50	ND	U	50	ND	U	50	ND	U	50
	CHLOROMETHANE	ND	U	50	ND	U	25	47.9		50	ND	U	50	ND	U	50	ND	U	50
	DICHLORODIFLUOROMETHANE	ND	U	100	ND	U	50	ND	U	100	ND	U	100	ND	U	100	ND	U	100
	ETHYLBENZENE	437		50	477		25	815		50	919		50	842		50	963		50
	ISOPROPYLBENZENE	40.2	J	50	49	J	25	63.4	J	50	71.2	J	50	59.9	J	50	76.1	J	50
	METHYL TERT-BUTYL ETHER	ND	U	50	ND	U	25	ND	U	50	ND	U	50	ND	U	50	ND	U	50
	METHYLENE CHLORIDE	ND	U	100	ND	U	50	57.4	J	100	ND	U	100	ND	U	100	ND	U	100
	NAPHTHALENE	64.5	J	50	63.1		25	80.9		50	98.7	J	50	86.5	J	50	102		50
	N-BUTYLBENZENE	ND	U	50	ND	U	25	ND	U	50	ND	U	50	ND	U	50	ND	U	50
	N-PROPYLBENZENE	45.1	J	50	49.6	J	25	70.2	J	50	84.6	J	50	74.5	J	50	87	J	50
	P-ISOPROPYLTOLUENE	ND	U	50	19.3	J	25	29	J	50	36.9	J	50	30.9	J	50	ND	U	50
	SEC-BUTYLBENZENE	ND	U	50	ND	U	25	ND	U	50	ND	U	50	ND	U	50	ND	U	50
	TERT-BUTYLBENZENE	ND	U	50	ND	U	25	ND	U	50	ND	U	50	ND	U	50	ND	U	50
	TOLUENE	4230		50	4420		25	8190		50	9220		50	8610		50	9550		50
	TRICHLOROETHENE	ND	U	50	ND	U	25	ND	U	50	ND	U	50	ND	U	50	ND	U	50
	TRICHLOROFLUOROMETHANE	ND	U	100	ND	U	50	ND	U	100	ND	U	100	ND	U	100	ND	U	100
	XYLENES	1490		150	1690		75	2760		150	2860		150	2640		150	3190		150

Notes:

a. EPA analytical methods listed are for the most recent sampling event.

b. Samples were collected using Geotech Bladder Pumps.

c. Samples were recollected (except for QuantArray-Chlor analysis) using replacement QED Bladder Pumps.

-- = Not applicable.

δ2H - Delta Deuterium.

0/00 - Per mille.

cells/mL = Cells per milliliter.

EPA = Environmental Protection Agency.

FD = Field duplicate.

ID = Identification.

J = Estimated value, concentration is less than LOQ but greater than laboratory method detection limit (DL).

J+ = Estimated value, concentration is less than LOQ but greater than laboratory method detection limit (DL); biased high.

J- = Estimated value, concentration is less than LOQ but greater than laboratory method detection limit (DL); biased low.

KAFB = Kirtland Air Force Base.

LOQ = Limit of Quantitation

µg/L = Microgram per liter.

mg/L = Milligram per liter.

NA = Not analyzed.

ND = Not detected.

NS = Not sampled.

REG = Regular/parent sample.

U = Analyte was not detected. The reported numerical value is at or below the LOQ.

UJ = Analyte was not detected. The reported value is estimated.

VAL QUAL = Validation qualifier.

VFA - Volatile fatty acid.

VOC = Volatile organic compound.

Table 9
Groundwater Analytical Results for KAFB-106EX1

	Phase Designation	Phase 2 Passive						Phase 2 Passive						Phase 3 Recirculation					
	Sample ID	106EX1-P2P-030718			106EX1-P2P-041118			106EX1-P2P-050918			106EX1-P2P-061418			106EX1-P3R-080818			106EX1-P3R-081618		
	Sample Date	3/7/2018			4/11/2018			5/9/2018			6/14/2018			8/8/2018			8/16/2018		
	Sample Pupose	REG			REG			REG			REG			REG			REG		
Chemical Class and Analytical Method[a]	**Parameter**	**Result**	**Val Qual**	**LOQ**	**Result**	**Val Qual**	**LOQ**	**Result**	**Val Qual**	**LOQ**	**Result**	**Val Qual**	**LOQ**	**Result**	**Val Qual**	**LOQ**	**Result**	**Val Qual**	**LOQ**
Microbial Community (cells/mL) QuantArray-Chlor	1,1 DCA Reductase (DCA)	NS	--	--	NS	--	--	ND	U	7.9	NS	--	--	NS	--	--	NS	--	--
	1,2 DCA Reductase (DCAR)	NS	--	--	NS	--	--	ND	U	7.9	NS	--	--	NS	--	--	NS	--	--
	BAV1 Vinyl Chloride Reductase (BVC)	NS	--	--	NS	--	--	ND	U	0.8	NS	--	--	NS	--	--	NS	--	--
	Chloroform Reductase (CFR)	NS	--	--	NS	--	--	ND	U	7.9	NS	--	--	NS	--	--	NS	--	--
	Dehalobacter DCM (DCM)	NS	--	--	NS	--	--	864		7.9	NS	--	--	NS	--	--	NS	--	--
	Dehalobacter spp. (DHBt)	NS	--	--	NS	--	--	228000		7.9	NS	--	--	NS	--	--	NS	--	--
	Dehalobium chlorocoercia (DECO)	NS	--	--	NS	--	--	46800		7.9	NS	--	--	NS	--	--	NS	--	--
	Dehalococcoides (DHC)	NS	--	--	NS	--	--	ND	U	0.8	NS	--	--	NS	--	--	NS	--	--
	Dehalogenimonas spp. (DHG)	NS	--	--	NS	--	--	3470		7.9	NS	--	--	NS	--	--	NS	--	--
	Desulfitobacterium spp. (DSB)	NS	--	--	NS	--	--	74400		7.9	NS	--	--	NS	--	--	NS	--	--
	Desulfuromonas spp. (DSM)	NS	--	--	NS	--	--	3800		7.9	NS	--	--	NS	--	--	NS	--	--
	Dichloromethane Dehalogenase (DCMA)	NS	--	--	NS	--	--	ND	U	7.9	NS	--	--	NS	--	--	NS	--	--
	Epoxyalkane Transferase (EtnE)	NS	--	--	NS	--	--	222		7.9	NS	--	--	NS	--	--	NS	--	--
	Ethene Monooxygenase (EtnC)	NS	--	--	NS	--	--	ND	U	7.9	NS	--	--	NS	--	--	NS	--	--
	Methanogens (MGN)	NS	--	--	NS	--	--	98.9		7.9	NS	--	--	NS	--	--	NS	--	--
	PCE Reductase (PCE-1)	NS	--	--	NS	--	--	ND	U	7.9	NS	--	--	NS	--	--	NS	--	--
	Phenol Hydroxylase (PHE)	NS	--	--	NS	--	--	119000		7.9	NS	--	--	NS	--	--	NS	--	--
	PMMO	NS	--	--	NS	--	--	NS	--	--	NS	--	--	NS	--	--	NS	--	--
	Soluble Methane Monooxygenase (SMMO)	NS	--	--	NS	--	--	300		7.9	NS	--	--	NS	--	--	NS	--	--
	Sulfate Reducing Bacteria (APS)	NS	--	--	NS	--	--	116000		7.9	NS	--	--	NS	--	--	NS	--	--
	tceA Reductase (TCE)	NS	--	--	NS	--	--	ND	U	0.8	NS	--	--	NS	--	--	NS	--	--
	Toluene Dioxygenase (TOD)	NS	--	--	NS	--	--	ND	U	7.9	NS	--	--	NS	--	--	NS	--	--
	Toluene Monooxygenase (RMO)	NS	--	--	NS	--	--	138000		7.9	NS	--	--	NS	--	--	NS	--	--
	Toluene Monooxygenase 2 (RDEG)	NS	--	--	NS	--	--	62700		7.9	NS	--	--	NS	--	--	NS	--	--
	Total Eubacteria (EBAC)	NS	--	--	NS	--	--	14700000		7.9	NS	--	--	NS	--	--	NS	--	--
	trans-1,2-DCE Reductase (TDR)	NS	--	--	NS	--	--	ND	U	7.9	NS	--	--	NS	--	--	NS	--	--
	Trichlorobenzene Dioxygenase (TCBO)	NS	--	--	NS	--	--	ND	U	7.9	NS	--	--	NS	--	--	NS	--	--
	Vinyl Chloride Reductase (VCR)	NS	--	--	NS	--	--	ND	U		NS	--	--	NS	--	--	NS	--	--
EDB (µg/L) EPA Method 8011	1,2-DIBROMOETHANE	13.7	J+	1.91	3.74	J	1.92	2.8		0.0939	2.43		0.192	17		0.31	19		0.3
Fluorometric (µg/L) Spectrofluorophotometry	FLUORESCEIN	NS	--	--	NS	--	--	NS	--	--	NS	--	--	NS	--	--	NS	--	--
Reduced Gases (µg/L) RSKSOP-175	ACETYLENE	ND	U	10	ND	U	10	ND	U	10	ND	UJ	10	ND	U	10	ND	U	10
	ETHANE	2.4	J	4	2.17	J	4	3.18	J	4	4.3	J	4	3.3	J	4	3.8	J	4
	ETHYLENE	9		5	7.28		5	11.4		5	13.2	J	5	11.9		5	13		5
	METHANE	22.9		2	63.2		2	103		2	256	J	2	7.9		2	9.3		2
	PROPANE	3.4	J	6	3.42	J	6	4.9	J	6	5.6	J	6	7.1		6	5.5	J	6
General Chemistry (mg/L) SM2320b, EPA Method 300, EPA Method 353.2, SM4500 PE	ALKALINITY	331		1	337		1	349		1	408	J-	1	310		5	320		5
	BROMIDE	0.404	J	0.25	0.441		0.125	0.512		0.125	0.496	J	0.25	1		1	0.71		0.5
	CHLORIDE	34.2		0.66	38.1		0.33	43.2		0.33	45.7		0.66	33		1	33		0.5
	IODIDE	3.3		0.75	3.9		0.75	6.8		0.75	8.3		0.75	4.2		0.75	3.9		0.75
	NITRATE	NS	--	--	ND	U	0.1	ND	U	0.1	ND	U	0.2	NS	--	--	NS	--	--
	NITRITE	NS	--	--	ND	U	0.1	ND	U	0.1	ND	U	0.2	NS	--	--	NS	--	--
	NITROGEN, NITRATE-NITRITE	ND	U	0.375	NA	--	--	0.0364	J	0.02	0.0185		0.02	ND	R	0.05	ND	U	0.05
	O-PHOSPHATE (AS P)	0.0116	J	0.02	0.0256		0.02	0.0364	J	0.02	0.0185		0.02	ND	R	0.15	ND	U	0.15
	SULFATE	3.89	J	2	3.48		1	3.6		1	0.774	J	2	8.4		2	6.7		1

Table 9
Groundwater Analytical Results for KAFB-106EX1

	Phase Designation	Phase 2 Passive						Phase 2 Passive						Phase 3 Recirculation					
	Sample ID	106EX1-P2P-030718			106EX1-P2P-041118			106EX1-P2P-050918			106EX1-P2P-061418			106EX1-P3R-080818			106EX1-P3R-081618		
	Sample Date	3/7/2018			4/11/2018			5/9/2018			6/14/2018			8/8/2018			8/16/2018		
	Sample Pupose	REG			REG			REG			REG			REG			REG		
Chemical Class and Analytical Method[a]	Parameter	Result	Val Qual	LOQ	Result	Val Qual	LOQ	Result	Val Qual	LOQ	Result	Val Qual	LOQ	Result	Val Qual	LOQ	Result	Val Qual	LOQ
VFAs (mg/L) EPA Method 300m	ACETIC ACID	38		1	32.4		1	41		1	64.9	J	10	30.6		10	28.5		10
	BUTYRIC ACID	0.6	J	1	ND	U	1	ND	U	1	ND	UJ	10	ND	U	1	ND	U	1
	FORMIC ACID	ND	U	1	ND	U	1	ND	U	1	ND	UJ	10	ND	U	1	ND	U	1
	LACTIC ACID	1.1		1	0.63	J	1	0.76	J	1	ND	UJ	10	0.3	J	1	0.7	J	1
	PROPIONIC ACID	7		1	4.54		1	5.38		1	ND	UJ	10	3.5	J	10	ND	U	1
	PYRUVIC ACID	ND	U	1	ND	U	1	ND	U	1	ND	UJ	10	ND	U	1	ND	U	1
	VALERIC ACID	ND	U	1	ND	U	1	ND	U	1	ND	UJ	10	ND	U	1	ND	U	1
Dissolved Metals (mg/L) EPA Method 6010	IRON	2.85		0.06	2.47	J-	0.06	2.59		0.06	4.58		0.06	1.5		0.05	1.5		0.05
	MANGANESE	3.19		0.006	3.45	J+	0.006	3.97		0.006	5.03		0.006	4		0.003	4.2		0.003
δ2H (‰) Mass Spectrometry, USGS Reston, VA	DELTA2H	NS	--	--	NS	--	--	NS	--	--	NS	--	--	NS	--	--	NS	--	--
CSIA EDB δ13C ‰) Kuder et al, 2012	EDB δ	NS	--	--	NS	--	--	6.0 ±1.5‰	--	--	NS	--	--	NS	--	--	NS	--	--
VOCs (µg/L) EPA Method 8260	1,1,2-TRICHLOROETHANE	ND	U	50	ND	U	50	ND	U	50	ND	U	50	ND	U	0.5	ND	U	10
	1,2,4-TRIMETHYLBENZENE	270		50	281		50	296		50	334		50	250		20	320		20
	1,2-DIBROMOETHANE	ND	U	50	ND	U	50	ND	U	50	ND	U	50	19	J+	1	19	J	20
	1,2-DICHLOROETHANE	ND	U	50	ND	U	50	ND	U	50	ND	U	50	ND	U	1	ND	U	20
	1,3,5-TRIMETHYLBENZENE	94.4	J	50	98.3	J	50	104		50	114		50	100	J+	0.5	110		10
	2-BUTANONE	ND	U	500	ND	U	500	ND	U	500	ND	U	500	67	J+	10	81	J	200
	2-CHLOROTOLUENE	ND	U	50	ND	U	50	ND	U	50	ND	U	50	ND	U	0.5	ND	U	10
	2-HEXANONE	ND	U	250	ND	U	250	ND	U	250	ND	U	250	83	J+	5	88	J	100
	4-METHYL-2-PENTANONE	ND	U	250	ND	U	250	ND	U	250	ND	U	250	67	J+	5	66	J	100
	ACETONE	ND	U	500	ND	U	500	ND	U	500	408	J	500	230	J+	10	280		200
	BENZENE	3110		50	2490		50	3410		50	4360		50	2900		20	3500		20
	CARBON DISULFIDE	ND	U	50	ND	U	50	ND	U	50	ND	U	50	ND	U	2	ND	U	40
	CHLOROMETHANE	ND	U	50	ND	U	50	ND	U	50	ND	U	50	ND	U	1	ND	U	20
	DICHLORODIFLUOROMETHANE	ND	U	100	ND	U	100	ND	U	100	ND	U	100	ND	U	1	ND	U	20
	ETHYLBENZENE	811		50	786		50	866		50	1090		50	760		20	890		20
	ISOPROPYLBENZENE	99.9	J	50	122		50	125		50	167		50	74	J+	1	79		20
	METHYL TERT-BUTYL ETHER	ND	U	50	ND	U	50	ND	U	50	ND	U	50	ND	U	0.5	ND	U	10
	METHYLENE CHLORIDE	ND	U	100	ND	U	100	ND	U	100	55.4	J	100	ND	U	5	ND	U	100
	NAPHTHALENE	69.6	J	50	96.3	J	50	113		50	114		50	120	J+	5	130		100
	N-BUTYLBENZENE	ND	U	50	ND	U	50	ND	U	50	ND	U	50	14	J+	1	14	J	20
	N-PROPYLBENZENE	67.3	J	50	75.8	J	50	83.6	J	50	92.6	J	50	71	J+	1	76		20
	P-ISOPROPYLTOLUENE	ND	U	50	44.9	J	50	54.8	J	50	ND	U	50	51	J+	1	49		20
	SEC-BUTYLBENZENE	ND	U	50	ND	U	50	ND	U	50	ND	U	50	14	J+	1	15	J	20
	TERT-BUTYLBENZENE	ND	U	50	ND	U	50	ND	U	50	ND	U	50	ND	U	1	ND	U	20
	TOLUENE	7660		50	6280		50	7660		50	10100		50	8300	J-	100	9500		100
	TRICHLOROETHENE	ND	U	50	ND	U	50	ND	U	50	ND	U	50	ND	U	1	ND	U	20
	TRICHLOROFLUOROMETHANE	ND	U	100	ND	U	100	ND	U	100	ND	U	100	ND	U	1	ND	U	20
	XYLENES	2430		150	2180		150	2680		150	3480		150	2400		10	2900		10

Notes:

a. EPA analytical methods listed are for the most recent sampling event.

b. Samples were collected using Geotech Bladder Pumps.

c. Samples were recollected (except for QuantArray-Chlor analysis) using replacement QED Bladder Pumps.

-- = Not applicable.

δ2H - Delta Deuterium.

0/00 - Per mille.

cells/mL = Cells per milliliter.

EPA = Environmental Protection Agency.

FD = Field duplicate.

ID = Identification.

J = Estimated value, concentration is less than LOQ but greater than laboratory method detection limit (DL).

J+ = Estimated value, concentration is less than LOQ but greater than laboratory method detection limit (DL); biased high.

J- = Estimated value, concentration is less than LOQ but greater than laboratory method detection limit (DL); biased low.

KAFB = Kirtland Air Force Base.

LOQ = Limit of Quantitation

µg/L = Microgram per liter.

mg/L = Milligram per liter.

NA = Not analyzed.

ND = Not detected.

NS = Not sampled.

REG = Regular/parent sample.

U = Analyte was not detected. The reported numerical value is at or below the LOQ.

UJ = Analyte was not detected. The reported value is estimated.

VAL QUAL = Validation qualifier.

VFA - Volatile fatty acid.

VOC = Volatile organic compound.

Table 9
Groundwater Analytical Results for KAFB-106EX1

	Phase Designation	Phase 3 Recirculation									Phase 3 Passive			Phase 3 Passive		
	Sample ID	106EX1-P3R-081618-FD			106EX1-P3R-082218			106EX1-P3R-082918			106EX1-P3P-091218			106EX1-P3P-100418		
	Sample Date	8/16/2018			8/22/2018			8/29/2018			9/12/2018			10/4/2018		
	Sample Pupose	FD			REG			REG			REG			REG		
Chemical Class and Analytical Method[a]	**Parameter**	**Result**	**Val Qual**	**LOQ**	**Result**	**Val Qual**	**LOQ**	**Result**	**Val Qual**	**LOQ**	**Result**	**Val Qual**	**LOQ**	**Result**	**Val Qual**	**LOQ**
Microbial Community (cells/mL) QuantArray-Chlor	1,1 DCA Reductase (DCA)	NS	--	--	ND	U	5	NS	--	--	**106EX1-**	--	--	NS	--	--
	1,2 DCA Reductase (DCAR)	NS	--	--	ND	U	5	NS	--	--	NS	--	--	NS	--	--
	BAV1 Vinyl Chloride Reductase (BVC)	NS	--	--	ND	U	0.5	NS	--	--	NS	--	--	NS	--	--
	Chloroform Reductase (CFR)	NS	--	--	ND	U	5	NS	--	--	NS	--	--	NS	--	--
	Dehalobacter DCM (DCM)	NS	--	--	963		5	NS	--	--	NS	--	--	NS	--	--
	Dehalobacter spp. (DHBt)	NS	--	--	192000		5	NS	--	--	NS	--	--	NS	--	--
	Dehalobium chlorocoercia (DECO)	NS	--	--	11100		5	NS	--	--	NS	--	--	NS	--	--
	Dehalococcoides (DHC)	NS	--	--	1.4		0.5	NS	--	--	NS	--	--	NS	--	--
	Dehalogenimonas spp. (DHG)	NS	--	--	ND	U	5	NS	--	--	NS	--	--	NS	--	--
	Desulfitobacterium spp. (DSB)	NS	--	--	113000		5	NS	--	--	NS	--	--	NS	--	--
	Desulfuromonas spp. (DSM)	NS	--	--	ND	U	5	NS	--	--	NS	--	--	NS	--	--
	Dichloromethane Dehalogenase (DCMA)	NS	--	--	ND	U	5	NS	--	--	NS	--	--	NS	--	--
	Epoxyalkane Transferase (EtnE)	NS	--	--	367		5	NS	--	--	NS	--	--	NS	--	--
	Ethene Monooxygenase (EtnC)	NS	--	--	ND	U	5	NS	--	--	NS	--	--	NS	--	--
	Methanogens (MGN)	NS	--	--	87.9		5	NS	--	--	NS	--	--	NS	--	--
	PCE Reductase (PCE-1)	NS	--	--	ND	U	5	NS	--	--	NS	--	--	NS	--	--
	Phenol Hydroxylase (PHE)	NS	--	--	67000		5	NS	--	--	NS	--	--	NS	--	--
	PMMO	NS	--	--	NS	--	--	NS	--	--	NS	--	--	NS	--	--
	Soluble Methane Monooxygenase (SMMO)	NS	--	--	183		5	NS	--	--	NS	--	--	NS	--	--
	Sulfate Reducing Bacteria (APS)	NS	--	--	198000		5	NS	--	--	NS	--	--	NS	--	--
	tceA Reductase (TCE)	NS	--	--	ND	U	0.5	NS	--	--	NS	--	--	NS	--	--
	Toluene Dioxygenase (TOD)	NS	--	--	ND	U	5	NS	--	--	NS	--	--	NS	--	--
	Toluene Monooxygenase (RMO)	NS	--	--	278000		5	NS	--	--	NS	--	--	NS	--	--
	Toluene Monooxygenase 2 (RDEG)	NS	--	--	22000		5	NS	--	--	NS	--	--	NS	--	--
	Total Eubacteria (EBAC)	NS	--	--	13800000		5	NS	--	--	NS	--	--	NS	--	--
	trans-1,2-DCE Reductase (TDR)	NS	--	--	ND	U	5	NS	--	--	NS	--	--	NS	--	--
	Trichlorobenzene Dioxygenase (TCBO)	NS	--	--	ND	U	5	NS	--	--	NS	--	--	NS	--	--
	Vinyl Chloride Reductase (VCR)	NS	--	--	ND	U		NS	--	--	NS	--	--	NS	--	--
EDB (µg/L) EPA Method 8011	1,2-DIBROMOETHANE	22		0.061	11		0.0003	20		0.059	9.3		0.03	3		0.015
Fluorometric (µg/L) Spectrofluorophotometry	FLUORESCEIN	NS	--	--	NS	--	--	NS	--	--	NS	--	--	NS	--	--
Reduced Gases (µg/L) RSKSOP-175	ACETYLENE	ND	U	10	ND	U	10	ND	U	10	ND	U	10	ND	U	10
	ETHANE	3.6	J	4	3.5	J	4	3.4	J	4	3.8	J	4	4.4		4
	ETHYLENE	12.3		5	11.5		5	10.9		5	11.8		5	13.5		5
	METHANE	9		2	9.4		2	11.6		2	112.7		2	1040.2		2
	PROPANE	4.8	J	6	4.8	J	6	4.5	J	6	4.7	J	6	11.2		6
General Chemistry (mg/L) SM2320b, EPA Method 300, EPA Method 353.2, SM4500 PE	ALKALINITY	330		5	340		5	340		5	360		5	440		5
	BROMIDE	0.69		0.5	0.68		0.5	0.72		0.5	0.71		0.5	2		0.5
	CHLORIDE	33		0.5	34		0.5	37		0.5	37		0.5	46		0.5
	IODIDE	3.7		0.75	4.1		0.75	4.6		0.75	4.7		0.75	6.2		0.75
	NITRATE	NS	--	--	NS	--	--	NS	--	--	NS	--	--	NS	--	--
	NITRITE	NS	--	--	NS	--	--	NS	--	--	NS	--	--	NS	--	--
	NITROGEN, NITRATE-NITRITE	ND	U	0.05	ND		0.05	ND	U	0.05	ND	U	0.05	ND	U	0.05
	O-PHOSPHATE (AS P)	ND	U	0.15	ND		0.15	ND	U	0.15	ND	U	0.15	ND	U	0.15
	SULFATE	6.7		1	6.6		1	6.9		1	2.7		1	ND	U	1

Table 9
Groundwater Analytical Results for KAFB-106EX1

	Phase Designation	Phase 3 Recirculation									Phase 3 Passive			Phase 3 Passive		
	Sample ID	106EX1-P3R-081618-FD			106EX1-P3R-082218			106EX1-P3R-082918			106EX1-P3P-091218			106EX1-P3P-100418		
	Sample Date	8/16/2018			8/22/2018			8/29/2018			9/12/2018			10/4/2018		
	Sample Pupose	FD			REG			REG			REG			REG		
Chemical Class and Analytical Method[a]	Parameter	Result	Val Qual	LOQ	Result	Val Qual	LOQ	Result	Val Qual	LOQ	Result	Val Qual	LOQ	Result	Val Qual	LOQ
VFAs (mg/L) EPA Method 300m	ACETIC ACID	28.6		10	34.3		10	35.2		10	51.6		10	102		10
	BUTYRIC ACID	ND	U	1	ND	U	1	ND	U	1	ND	U	1	ND	U	1
	FORMIC ACID	ND	U	1	ND	U	1	ND	U	1	ND	U	1	ND	U	1
	LACTIC ACID	0.9	J	1	0.6	J	1	0.6	J	1	0.8	J	1	ND	U	1
	PROPIONIC ACID	ND	U	1	ND	U	1	4.4		1	11.6		1	17.5		10
	PYRUVIC ACID	ND	U	1	ND	U	1	ND	U	1	ND	U	1	ND	U	1
	VALERIC ACID	ND	U	1	ND	U	1	ND	U	1	ND	U	1	ND	U	1
Dissolved Metals (mg/L) EPA Method 6010	IRON	1.5		0.05	1.3		0.05	1.3		0.05	2.8		0.05	7.7		0.05
	MANGANESE	4.2		0.003	3.8		0.003	4.1		0.003	4.6		0.003	6.8		0.003
δ2H (‰) Mass Spectrometry, USGS Reston, VA	DELTA2H	NS	--	--	NS	--	--	NS	--	--	NS	--	--	NS	--	--
CSIA EDB δ13C ‰) Kuder et al, 2012	EDB δ	NS	--	--	8.0 ±1.5‰	--	--	NS	--	--	-3.4 ±1.5‰	--	--	NS	--	--
VOCs (µg/L) EPA Method 8260	1,1,2-TRICHLOROETHANE	ND	U	10	ND	U	50	ND	U	0.5	ND	U	50	ND	U	50
	1,2,4-TRIMETHYLBENZENE	300		20	340		100	260		100	300		100	530		100
	1,2-DIBROMOETHANE	20		20	ND	U	100	19	J+	1	ND	U	100	ND	U	100
	1,2-DICHLOROETHANE	ND	U	20	ND	U	100	2.8		1	ND	U	100	ND	U	100
	1,3,5-TRIMETHYLBENZENE	100		10	120		50	99	J+	0.5	110		50	180		50
	2-BUTANONE	73	J	200	ND	U	1000	72	J+	10	ND	U	1000	ND	U	1000
	2-CHLOROTOLUENE	ND	U	10	ND	U	50	ND	U	0.5	ND	U	50	ND	U	50
	2-HEXANONE	92	J	100	ND	U	500	75	J+	5	ND	U	500	ND	U	500
	4-METHYL-2-PENTANONE	70	J	100	ND	U	500	61	J+	5	ND	U	500	ND	U	500
	ACETONE	280		200	ND	U	1000	250	J+	10	ND	U	1000	ND	U	1000
	BENZENE	3300		20	3800		100	3200		100	3600		100	4000		100
	CARBON DISULFIDE	ND	U	40	ND	U	200	ND	U	2	ND	U	200	ND	U	200
	CHLOROMETHANE	ND	U	20	ND	U	100	ND	U	1	ND	U	100	ND	U	100
	DICHLORODIFLUOROMETHANE	ND	U	20	ND	U	100	ND	U	1	ND	U	100	ND	U	100
	ETHYLBENZENE	830		20	1000		100	790		100	970		100	1300		100
	ISOPROPYLBENZENE	71		20	88	J	100	77	J+	1	110		100	190		100
	METHYL TERT-BUTYL ETHER	ND	U	10	ND	U	50	ND	U	0.5	ND	U	50	ND	U	50
	METHYLENE CHLORIDE	ND	U	100	ND	U	500	ND	U	5	ND	U	500	ND	U	500
	NAPHTHALENE	120		100	ND	U	500	120	J+	5	ND	U	500	690		500
	N-BUTYLBENZENE	12	J	20	ND	U	100	15	J+	1	ND	U	100	ND	U	100
	N-PROPYLBENZENE	68		20	87	J	100	73	J+	1	85	J	100	150		100
	P-ISOPROPYLTOLUENE	44		20	53	J	100	59	J+	1	64	J	100	110		100
	SEC-BUTYLBENZENE	14	J	20	ND	U	100	13	J+	1	ND	U	100	ND	U	100
	TERT-BUTYLBENZENE	ND	U	20	ND	U	100	1	J+	1	ND	U	100	ND	U	100
	TOLUENE	9300		100	9800		100	7900		100	8700		100	12000		100
	TRICHLOROETHENE	ND	U	20	ND	U	100	ND	U	1	ND	U	100	ND	U	100
	TRICHLOROFLUOROMETHANE	ND	U	20	ND	U	100	ND	U	1	ND	U	100	ND	U	100
	XYLENES	2700		10	3200		50	2500		50	3000		50	4100		50

Notes:

a. EPA analytical methods listed are for the most recent sampling event.

b. Samples were collected using Geotech Bladder Pumps.

c. Samples were recollected (except for QuantArray-Chlor analysis) using replacement QED Bladder Pumps.

-- = Not applicable.

δ2H - Delta Deuterium.

0/00 - Per mille.

cells/mL = Cells per milliliter.

EPA = Environmental Protection Agency.

FD = Field duplicate.

ID = Identification.

J = Estimated value, concentration is less than LOQ but greater than laboratory method detection limit (DL).

J+ = Estimated value, concentration is less than LOQ but greater than laboratory method detection limit (DL); biased high.

J- = Estimated value, concentration is less than LOQ but greater than laboratory method detection limit (DL); biased low.

KAFB = Kirtland Air Force Base.

LOQ = Limit of Quantitation

µg/L = Microgram per liter.

mg/L = Milligram per liter.

NA = Not analyzed.

ND = Not detected.

NS = Not sampled.

REG = Regular/parent sample.

U = Analyte was not detected. The reported numerical value is at or below the LOQ.

UJ = Analyte was not detected. The reported value is estimated.

VAL QUAL = Validation qualifier.

VFA - Volatile fatty acid.

VOC = Volatile organic compound.

Table 9
Groundwater Analytical Results for KAFB-106EX1

	Phase Designation	Phase 3 Passive			Phase 4 Passive		
	Sample ID	106EX1-P3P-111918			106EX1-P4P-012119		
	Sample Date	11/19/2018			1/21/2019		
	Sample Pupose	REG			REG		
Chemical Class and Analytical Method[a]	Parameter	Result	Val Qual	LOQ	Result	Val Qual	LOQ
Microbial Community (cells/mL) QuantArray-Chlor	1,1 DCA Reductase (DCA)	ND	U	5.9	ND	U	5.2
	1,2 DCA Reductase (DCAR)	ND	U	5.9	ND	U	5.2
	BAV1 Vinyl Chloride Reductase (BVC)	ND	U	0.6	ND	U	0.5
	Chloroform Reductase (CFR)	44.2		5.9	ND	U	5.2
	Dehalobacter DCM (DCM)	640		5.9	ND	U	5.2
	Dehalobacter spp. (DHBt)	211000		5.9	207000		5.2
	Dehalobium chlorocoercia (DECO)	5700		5.9	4970		5.2
	Dehalococcoides (DHC)	ND	U	0.6	0.3	J	0.5
	Dehalogenimonas spp. (DHG)	200		5.9	ND	U	5.2
	Desulfitobacterium spp. (DSB)	67400		5.9	63300		5.2
	Desulfuromonas spp. (DSM)	ND	U	5.9	ND	U	5.2
	Dichloromethane Dehalogenase (DCMA)	ND	U	5.9	ND	U	5.2
	Epoxyalkane Transferase (EtnE)	ND	U	5.9	ND	U	5.2
	Ethene Monooxygenase (EtnC)	ND	U	5.9			
	Methanogens (MGN)	9890		5.9	30000		5.2
	PCE Reductase (PCE-1)	ND	U	5.9	ND	U	5.2
	Phenol Hydroxylase (PHE)	14600		5.9	12700		5.2
	PMMO	NS	--	--	NS	--	--
	Soluble Methane Monooxygenase (SMMO)	ND	U	5.9	95.3		5.2
	Sulfate Reducing Bacteria (APS)	217000		5.9	110000		5.2
	tceA Reductase (TCE)	ND	U	0.6	ND	U	0.5
	Toluene Dioxygenase (TOD)	ND	U	5.9	ND	U	5.2
	Toluene Monooxygenase (RMO)	30700		5.9	34000		5.2
	Toluene Monooxygenase 2 (RDEG)	19800		5.9	8210		5.2
	Total Eubacteria (EBAC)	8370000		5.9	6200000		5.2
	trans-1,2-DCE Reductase (TDR)	ND	U	5.9	ND	U	5.2
	Trichlorobenzene Dioxygenase (TCBO)	ND	U	5.9	ND	U	5.2
	Vinyl Chloride Reductase (VCR)	ND	U		ND	U	0.5
EDB (µg/L) EPA Method 8011	1,2-DIBROMOETHANE	0.9		0.0059	0.78		0.003
Fluorometric (µg/L) Spectrofluorophotometry	FLUORESCEIN	NS	--	--	NS	--	--
Reduced Gases (µg/L) RSKSOP-175	ACETYLENE	ND	U	10	ND		10
	ETHANE	3.6	J	4	1.9	J	4
	ETHYLENE	9.5		5	5.2		5
	METHANE	1724		2	2940.2		2
	PROPANE	5.7	J	6	ND		6
General Chemistry (mg/L) SM2320b, EPA Method 300, EPA Method 353.2, SM4500 PE	ALKALINITY	420		5	420		5
	BROMIDE	1.1		0.5	0.84		0.5
	CHLORIDE	45		0.5	44		0.5
	IODIDE	6.2		0.75	7.3		1.5
	NITRATE	NS	--	--	NS	--	--
	NITRITE	NS	--	--	NS	--	--
	NITROGEN, NITRATE-NITRITE	ND	U	0.05	ND		0.05
	O-PHOSPHATE (AS P)	ND	UJ	0.15	ND		0.15
	SULFATE	0.54	J	1	0.51	J	1

Table 9
Groundwater Analytical Results for KAFB-106EX1

	Phase Designation	Phase 3 Passive			Phase 4 Passive		
	Sample ID	106EX1-P3P-111918			106EX1-P4P-012119		
	Sample Date	11/19/2018			1/21/2019		
	Sample Pupose	REG			REG		
Chemical Class and Analytical Method[a]	Parameter	Result	Val Qual	LOQ	Result	Val Qual	LOQ
VFAs (mg/L) EPA Method 300m	ACETIC ACID	37.8		10	19.1		10
	BUTYRIC ACID	ND	U	1	ND		1
	FORMIC ACID	ND	U	1	ND		1
	LACTIC ACID	0.6	J	1	0.5		1
	PROPIONIC ACID	ND	U	1	ND		1
	PYRUVIC ACID	ND	U	1	ND		1
	VALERIC ACID	ND	U	1	ND		1
Dissolved Metals (mg/L) EPA Method 6010	IRON	7.5		0.05	8.4		0.05
	MANGANESE	5.7		0.003	4.8		0.003
δ2H (‰) Mass Spectrometry, USGS Reston, VA	DELTA2H	NS	--	--	NS	--	--
CSIA EDB δ13C ‰) Kuder et al, 2012	EDB δ	NS	--	--	NS	--	--
VOCs (µg/L) EPA Method 8260	1,1,2-TRICHLOROETHANE	ND	U	25	ND		10
	1,2,4-TRIMETHYLBENZENE	280		50	250		20
	1,2-DIBROMOETHANE	ND	U	50	ND		20
	1,2-DICHLOROETHANE	ND	U	50	NA	--	--
	1,3,5-TRIMETHYLBENZENE	100		25	78		10
	2-BUTANONE	ND	U	500	ND		200
	2-CHLOROTOLUENE	ND	U	25	ND		10
	2-HEXANONE	ND	U	250	ND		100
	4-METHYL-2-PENTANONE	ND	U	250	47		100
	ACETONE	ND	U	500	ND		200
	BENZENE	3000		50	2000		20
	CARBON DISULFIDE	ND	U	100	ND		40
	CHLOROMETHANE	ND	U	50	ND		20
	DICHLORODIFLUOROMETHANE	ND	U	50	NA	--	--
	ETHYLBENZENE	950		50	NA	--	--
	ISOPROPYLBENZENE	180		50	150		20
	METHYL TERT-BUTYL ETHER	ND	U	25	ND		10
	METHYLENE CHLORIDE	ND	U	250	ND		100
	NAPHTHALENE	ND	U	250	90		100
	N-BUTYLBENZENE	ND	U	50	13		20
	N-PROPYLBENZENE	84		50	63		20
	P-ISOPROPYLTOLUENE	56		50	56		20
	SEC-BUTYLBENZENE	ND	U	50	13		20
	TERT-BUTYLBENZENE	ND	U	50	ND		20
	TOLUENE	8800		50	4500		50
	TRICHLOROETHENE	ND	U	50	ND		20
	TRICHLOROFLUOROMETHANE	ND	U	50	ND		20
	XYLENES	3000		25	2100		10

Notes:

a. EPA analytical methods listed are for the most recent sampling event.

b. Samples were collected using Geotech Bladder Pumps.

c. Samples were recollected (except for QuantArray-Chlor analysis) using replacement QED Bladder Pumps.

-- = Not applicable.

δ2H - Delta Deuterium.

0/00 - Per mille.

cells/mL = Cells per milliliter.

EPA = Environmental Protection Agency.

FD = Field duplicate.

ID = Identification.

J = Estimated value, concentration is less than LOQ but greater than laboratory method detection limit (DL).

J+ = Estimated value, concentration is less than LOQ but greater than laboratory method detection limit (DL); biased high.

J- = Estimated value, concentration is less than LOQ but greater than laboratory method detection limit (DL); biased low.

KAFB = Kirtland Air Force Base.

LOQ = Limit of Quantitation

µg/L = Microgram per liter.

mg/L = Milligram per liter.

NA = Not analyzed.

ND = Not detected.

NS = Not sampled.

REG = Regular/parent sample.

U = Analyte was not detected. The reported numerical value is at or below the LOQ.

UJ = Analyte was not detected. The reported value is estimated.

VAL QUAL = Validation qualifier.

VFA - Volatile fatty acid.

VOC = Volatile organic compound.

Table 10
Groundwater Analytical Results for KAFB-106EX2

	Phase Designation	Original Baseline[b]			New Baseline - QED Pumps[c]			Phase 1 Recirculation								
	Sample ID	106EX2-BL-062917			106EX2-BL-092617			106EX2-P1R-100417			106EX2-P1R-100617			106EX2-P1R-100917		
	Sample Date	6/29/2017			9/26/2017			10/4/2017			10/6/2017			10/9/2017		
	Sample Pupose	REG			REG			REG			REG			REG		
Chemical Class and Analytical Method[a]	**Parameter**	**Result**	**Val Qual**	**LOQ**	**Result**	**Val Qual**	**LOQ**	**Result**	**Val Qual**	**LOQ**	**Result**	**Val Qual**	**LOQ**	**Result**	**Val Qual**	**LOQ**
Microbial Community (cells/mL) QuantArray-Chlor	1,1 DCA Reductase (DCA)	ND	U	5.3	NS	--	--	NS	--	--	NS	--	--	NS	--	--
	1,2 DCA Reductase (DCAR)	ND	U	5.3	NS	--	--	NS	--	--	NS	--	--	NS	--	--
	BAV1 Vinyl Chloride Reductase (BVC)	ND	U	0.5	NS	--	--	NS	--	--	NS	--	--	NS	--	--
	Chloroform Reductase (CFR)	1600		5.3	NS	--	--	NS	--	--	NS	--	--	NS	--	--
	Dehalobacter DCM (DCM)	ND	U	5.3	NS	--	--	NS	--	--	NS	--	--	NS	--	--
	Dehalobacter spp. (DHBt)	117000		5.3	NS	--	--	NS	--	--	NS	--	--	NS	--	--
	Dehalobium chlorocoercia (DECO)	29900		5.3	NS	--	--	NS	--	--	NS	--	--	NS	--	--
	Dehalococcoides (DHC)	ND	U	0.5	NS	--	--	NS	--	--	NS	--	--	NS	--	--
	Dehalogenimonas spp. (DHG)	ND	U	5.3	NS	--	--	NS	--	--	NS	--	--	NS	--	--
	Desulfitobacterium spp. (DSB)	66900		5.3	NS	--	--	NS	--	--	NS	--	--	NS	--	--
	Desulfuromonas spp. (DSM)	ND	U	5.3	NS	--	--	NS	--	--	NS	--	--	NS	--	--
	Dichloromethane Dehalogenase (DCMA)	ND	U	5.3	NS	--	--	NS	--	--	NS	--	--	NS	--	--
	Epoxyalkane Transferase (EtnE)	ND	U	5.3	NS	--	--	NS	--	--	NS	--	--	NS	--	--
	Ethene Monooxygenase (EtnC)	ND	U	5.3	NS	--	--	NS	--	--	NS	--	--	NS	--	--
	Methanogens (MGN)	29.7		5.3	NS	--	--	NS	--	--	NS	--	--	NS	--	--
	PCE Reductase (PCE-1)	NS	--	--	NS	--	--	NS	--	--	NS	--	--	NS	--	--
	Phenol Hydroxylase (PHE)	38900		5.3	NS	--	--	NS	--	--	NS	--	--	NS	--	--
	PMMO	108		5.3	NS	--	--	NS	--	--	NS	--	--	NS	--	--
	Soluble Methane Monooxygenase (SMMO)	229		5.3	NS	--	--	NS	--	--	NS	--	--	NS	--	--
	Sulfate Reducing Bacteria (APS)	124000		5.3	NS	--	--	NS	--	--	NS	--	--	NS	--	--
	tceA Reductase (TCE)	ND	U	0.5	NS	--	--	NS	--	--	NS	--	--	NS	--	--
	Toluene Dioxygenase (TOD)	36.8		5.3	NS	--	--	NS	--	--	NS	--	--	NS	--	--
	Toluene Monooxygenase (RMO)	45100		5.3	NS	--	--	NS	--	--	NS	--	--	NS	--	--
	Toluene Monooxygenase 2 (RDEG)	14500		5.3	NS	--	--	NS	--	--	NS	--	--	NS	--	--
	Total Eubacteria (EBAC)	818000		5.3	NS	--	--	NS	--	--	NS	--	--	NS	--	--
	trans-1,2-DCE Reductase (TDR)	NS	--	--	NS	--	--	NS	--	--	NS	--	--	NS	--	--
	Trichlorobenzene Dioxygenase (TCBO)	190		5.3	NS	--	--	NS	--	--	NS	--	--	NS	--	--
	Vinyl Chloride Reductase (VCR)	ND	U	0.5	NS	--	--	NS	--	--	NS	--	--	NS	--	--
EDB (µg/L) EPA Method 8011	1,2-DIBROMOETHANE	143		9.53	143	J+	7.59	NS	--	--	NS	--	--	NS	--	--
Fluorometric (µg/L) Spectrofluorophotometry	FLUORESCEIN	ND	U	0.01	ND	U	0.01	ND	U	0.01	ND	U	0.01	0.275		0.01
Reduced Gases (µg/L) RSKSOP-175	ACETYLENE	ND	U	10	ND	U	10	NS	--	--	NS	--	--	NS	--	--
	ETHANE	1.34	J	4	2.63	J	4	NS	--	--	NS	--	--	NS	--	--
	ETHYLENE	0.98	J	5	2.54	J	5	NS	--	--	NS	--	--	NS	--	--
	METHANE	1.48	J	2	4.08		2	NS	--	--	NS	--	--	NS	--	--
	PROPANE	1.82	J	6	ND	U	6	NS	--	--	NS	--	--	NS	--	--
General Chemistry (mg/L) SM2320b, EPA Method 300, EPA Method 353.2, SM4500 PE	ALKALINITY	279		1	309		1	NS	--	--	NS	--	--	NS	--	--
	BROMIDE	0.998	J-	0.125	0.803		0.25	NS	--	--	NS	--	--	NS	--	--
	CHLORIDE	91.3		0.66	91.5		0.66	NS	--	--	NS	--	--	NS	--	--
	IODIDE	ND	U	0.2	ND	U	0.75	NS	--	--	NS	--	--	NS	--	--
	NITRATE	NS	--	--	NS	--	--	NS	--	--	NS	--	--	NS	--	--
	NITRITE	NS	--	--	NS	--	--	NS	--	--	NS	--	--	NS	--	--
	NITROGEN, NITRATE-NITRITE	0.621		0.375	ND	U	0.375	NS	--	--	NS	--	--	NS	--	--
	O-PHOSPHATE (AS P)	0.0275		0.02	0.196	J+	0.02	NS	--	--	NS	--	--	NS	--	--
	SULFATE	26.8		2	25		2	NS	--	--	NS	--	--	NS	--	--

Table 10
Groundwater Analytical Results for KAFB-106EX2

	Phase Designation	Original Baseline[b]			New Baseline - QED Pumps[c]			Phase 1 Recirculation								
	Sample ID	106EX2-BL-062917			106EX2-BL-092617			106EX2-P1R-100417			106EX2-P1R-100617			106EX2-P1R-100917		
	Sample Date	6/29/2017			9/26/2017			10/4/2017			10/6/2017			10/9/2017		
	Sample Pupose	REG			REG			REG			REG			REG		
Chemical Class and Analytical Method[a]	**Parameter**	**Result**	**Val Qual**	**LOQ**	**Result**	**Val Qual**	**LOQ**	**Result**	**Val Qual**	**LOQ**	**Result**	**Val Qual**	**LOQ**	**Result**	**Val Qual**	**LOQ**
VFAs (mg/L) EPA Method 300m	ACETIC ACID	ND	U	1	ND	U	1	NS	--	--	NS	--	--	NS	--	--
	BUTYRIC ACID	ND	U	1	ND	U	1	NS	--	--	NS	--	--	NS	--	--
	FORMIC ACID	ND	U	1	ND	U	1	NS	--	--	NS	--	--	NS	--	--
	LACTIC ACID	ND	U	1	ND	U	1	NS	--	--	NS	--	--	NS	--	--
	PROPIONIC ACID	ND	U	1	ND	U	1	NS	--	--	NS	--	--	NS	--	--
	PYRUVIC ACID	ND	U	1	ND	U	1	NS	--	--	NS	--	--	NS	--	--
	VALERIC ACID	ND	U	1	ND	U	1	NS	--	--	NS	--	--	NS	--	--
Dissolved Metals (mg/L) EPA Method 6010	IRON	0.99		0.06	2.33		0.06	NS	--	--	NS	--	--	NS	--	--
	MANGANESE	2.63		0.006	3.1		0.006	NS	--	--	NS	--	--	NS	--	--
δ2H (‰) Mass Spectrometry, USGS Reston, VA	DELTA2H	-93.16		-99	-91.73		-99	-92.4		-99	-93.58		-99	-92.76		-99
CSIA EDB δ13C ‰) Kuder et al, 2012	EDB δ	-19.5 ±2‰	--	--	-18.1 ±2‰	--	--	NS	--	--	NS	--	--	NS	--	--
VOCs (µg/L) EPA Method 8260	1,1,2-TRICHLOROETHANE	ND	U	50	ND	U	50	NS	--	--	NS	--	--	NS	--	--
	1,2,4-TRIMETHYLBENZENE	190		50	178		50	NS	--	--	NS	--	--	NS	--	--
	1,2-DIBROMOETHANE	154		50	146		50	NS	--	--	NS	--	--	NS	--	--
	1,2-DICHLOROETHANE	ND	U	50	ND	U	50	NS	--	--	NS	--	--	NS	--	--
	1,3,5-TRIMETHYLBENZENE	65	J	50	69.8	J	50	NS	--	--	NS	--	--	NS	--	--
	2-BUTANONE	ND	U	500	ND	U	500	NS	--	--	NS	--	--	NS	--	--
	2-CHLOROTOLUENE	ND	U	50	ND	U	50	NS	--	--	NS	--	--	NS	--	--
	2-HEXANONE	277	J	250	281	J	250	NS	--	--	NS	--	--	NS	--	--
	4-METHYL-2-PENTANONE	ND	U	250	ND	U	250	NS	--	--	NS	--	--	NS	--	--
	ACETONE	1340		500	1040		500	NS	--	--	NS	--	--	NS	--	--
	BENZENE	3700		50	3270		50	NS	--	--	NS	--	--	NS	--	--
	CARBON DISULFIDE	ND	U	50	27.6	J	50	NS	--	--	NS	--	--	NS	--	--
	CHLOROMETHANE	ND	U	50	ND	U	50	NS	--	--	NS	--	--	NS	--	--
	DICHLORODIFLUOROMETHANE	ND	U	100	ND	U	100	NS	--	--	NS	--	--	NS	--	--
	ETHYLBENZENE	697		50	692		50	NS	--	--	NS	--	--	NS	--	--
	ISOPROPYLBENZENE	45.8	J+	50	52.5	J	50	NS	--	--	NS	--	--	NS	--	--
	METHYL TERT-BUTYL ETHER	ND	U	50	ND	U	50	NS	--	--	NS	--	--	NS	--	--
	METHYLENE CHLORIDE	ND	U	100	ND	U	100	NS	--	--	NS	--	--	NS	--	--
	NAPHTHALENE	73.4	J+	50	66.4	J	50	NS	--	--	NS	--	--	NS	--	--
	N-BUTYLBENZENE	ND	U	50	ND	U	50	NS	--	--	NS	--	--	NS	--	--
	N-PROPYLBENZENE	59.4	J	50	57.7	J	50	NS	--	--	NS	--	--	NS	--	--
	P-ISOPROPYLTOLUENE	ND	U	50	ND	U	50	NS	--	--	NS	--	--	NS	--	--
	SEC-BUTYLBENZENE	ND	U	50	ND	U	50	NS	--	--	NS	--	--	NS	--	--
	TERT-BUTYLBENZENE	ND	U	50	ND	U	50	NS	--	--	NS	--	--	NS	--	--
	TOLUENE	8290		50	6600		50	NS	--	--	NS	--	--	NS	--	--
	TRICHLOROETHENE	ND	U	50	ND	U	50	NS	--	--	NS	--	--	NS	--	--
	TRICHLOROFLUOROMETHANE	ND	U	100	ND	U	100	NS	--	--	NS	--	--	NS	--	--
	XYLENES	2620		150	2350		150	NS	--	--	NS	--	--	NS	--	--

Notes:

a. EPA analytical methods listed are for the most recent sampling event.

b. Samples were collected using Geotech Bladder Pumps.

c. Samples were recollected (except for QuantArray-Chlor analysis) using replacement QED Bladder Pumps.

-- = Not applicable.

δ2H - Delta Deuterium.

0/00 - Per mille.

cells/mL = Cells per milliliter.

EPA = Environmental Protection Agency.

FD = Field duplicate.

ID = Identification.

J = Estimated value, concentration is less than LOQ but greater than laboratory method detection limit (DL).

J+ = Estimated value, concentration is less than LOQ but greater than laboratory method detection limit (DL); biased high.

J- = Estimated value, concentration is less than LOQ but greater than laboratory method detection limit (DL); biased low.

KAFB = Kirtland Air Force Base.

LOQ = Limit of Quantitation

µg/L = Microgram per liter.

mg/L = Milligram per liter.

NA = Not analyzed.

ND = Not detected.

NS = Not sampled.

REG = Regular/parent sample.

U = Analyte was not detected. The reported numerical value is at or below the LOQ.

UJ = Analyte was not detected. The reported value is estimated.

VAL QUAL = Validation qualifier.

VFA - Volatile fatty acid.

VOC = Volatile organic compound.

Table 10
Groundwater Analytical Results for KAFB-106EX2

	Phase Designation	Phase 1 Recirculation											
	Sample ID	106EX2-P1R-101217			106EX2-P1R-101617			106EX2-P1R-102017			106EX2-P1R-102517		
	Sample Date	10/12/2017			10/16/2017			10/20/2017			10/25/2017		
	Sample Pupose	REG			REG			REG			REG		
Chemical Class and Analytical Method[a]	Parameter	Result	Val Qual	LOQ	Result	Val Qual	LOQ	Result	Val Qual	LOQ	Result	Val Qual	LOQ
Microbial Community (cells/mL) QuantArray-Chlor	1,1 DCA Reductase (DCA)	NS	--	--	NS	--	--	NS	--	--	NS	--	--
	1,2 DCA Reductase (DCAR)	NS	--	--	NS	--	--	NS	--	--	NS	--	--
	BAV1 Vinyl Chloride Reductase (BVC)	NS	--	--	NS	--	--	NS	--	--	NS	--	--
	Chloroform Reductase (CFR)	NS	--	--	NS	--	--	NS	--	--	NS	--	--
	Dehalobacter DCM (DCM)	NS	--	--	NS	--	--	NS	--	--	NS	--	--
	Dehalobacter spp. (DHBt)	NS	--	--	NS	--	--	NS	--	--	NS	--	--
	Dehalobium chlorocoercia (DECO)	NS	--	--	NS	--	--	NS	--	--	NS	--	--
	Dehalococcoides (DHC)	NS	--	--	NS	--	--	NS	--	--	NS	--	--
	Dehalogenimonas spp. (DHG)	NS	--	--	NS	--	--	NS	--	--	NS	--	--
	Desulfitobacterium spp. (DSB)	NS	--	--	NS	--	--	NS	--	--	NS	--	--
	Desulfuromonas spp. (DSM)	NS	--	--	NS	--	--	NS	--	--	NS	--	--
	Dichloromethane Dehalogenase (DCMA)	NS	--	--	NS	--	--	NS	--	--	NS	--	--
	Epoxyalkane Transferase (EtnE)	NS	--	--	NS	--	--	NS	--	--	NS	--	--
	Ethene Monooxygenase (EtnC)	NS	--	--	NS	--	--	NS	--	--	NS	--	--
	Methanogens (MGN)	NS	--	--	NS	--	--	NS	--	--	NS	--	--
	PCE Reductase (PCE-1)	NS	--	--	NS	--	--	NS	--	--	NS	--	--
	Phenol Hydroxylase (PHE)	NS	--	--	NS	--	--	NS	--	--	NS	--	--
	PMMO	NS	--	--	NS	--	--	NS	--	--	NS	--	--
	Soluble Methane Monooxygenase (SMMO)	NS	--	--	NS	--	--	NS	--	--	NS	--	--
	Sulfate Reducing Bacteria (APS)	NS	--	--	NS	--	--	NS	--	--	NS	--	--
	tceA Reductase (TCE)	NS	--	--	NS	--	--	NS	--	--	NS	--	--
	Toluene Dioxygenase (TOD)	NS	--	--	NS	--	--	NS	--	--	NS	--	--
	Toluene Monooxygenase (RMO)	NS	--	--	NS	--	--	NS	--	--	NS	--	--
	Toluene Monooxygenase 2 (RDEG)	NS	--	--	NS	--	--	NS	--	--	NS	--	--
	Total Eubacteria (EBAC)	NS	--	--	NS	--	--	NS	--	--	NS	--	--
	trans-1,2-DCE Reductase (TDR)	NS	--	--	NS	--	--	NS	--	--	NS	--	--
	Trichlorobenzene Dioxygenase (TCBO)	NS	--	--	NS	--	--	NS	--	--	NS	--	--
	Vinyl Chloride Reductase (VCR)	NS	--	--	NS	--	--	NS	--	--	NS	--	--
EDB (µg/L) EPA Method 8011	1,2-DIBROMOETHANE	NS	--	--	NS	--	--	NS	--	--	137		9.48
Fluorometric (µg/L) Spectrofluorophotometry	FLUORESCEIN	3.242		0.01	5.394		0.01	6.778		0.01	10.117		0.01
Reduced Gases (µg/L) RSKSOP-175	ACETYLENE	NS	--	--	NS	--	--	NS	--	--	ND	U	10
	ETHANE	NS	--	--	NS	--	--	NS	--	--	ND	U	4
	ETHYLENE	NS	--	--	NS	--	--	NS	--	--	ND	U	5
	METHANE	NS	--	--	NS	--	--	NS	--	--	ND	U	2
	PROPANE	NS	--	--	NS	--	--	NS	--	--	ND	U	6
General Chemistry (mg/L) SM2320b, EPA Method 300, EPA Method 353.2, SM4500 PE	ALKALINITY	NS	--	--	NS	--	--	NS	--	--	280		1
	BROMIDE	NS	--	--	NS	--	--	NS	--	--	0.823		0.25
	CHLORIDE	NS	--	--	NS	--	--	NS	--	--	83.1		0.66
	IODIDE	NS	--	--	NS	--	--	NS	--	--	ND	U	0.75
	NITRATE	NS	--	--	NS	--	--	NS	--	--	NS	--	--
	NITRITE	NS	--	--	NS	--	--	NS	--	--	NS	--	--
	NITROGEN, NITRATE-NITRITE	NS	--	--	NS	--	--	NS	--	--	ND	U	0.375
	O-PHOSPHATE (AS P)	NS	--	--	NS	--	--	NS	--	--	0.116		0.02
	SULFATE	NS	--	--	NS	--	--	NS	--	--	28.5		2

Table 10
Groundwater Analytical Results for KAFB-106EX2

	Phase Designation	Phase 1 Recirculation											
	Sample ID	106EX2-P1R-101217			106EX2-P1R-101617			106EX2-P1R-102017			106EX2-P1R-102517		
	Sample Date	10/12/2017			10/16/2017			10/20/2017			10/25/2017		
	Sample Pupose	REG			REG			REG			REG		
Chemical Class and Analytical Method[a]	**Parameter**	**Result**	**Val Qual**	**LOQ**	**Result**	**Val Qual**	**LOQ**	**Result**	**Val Qual**	**LOQ**	**Result**	**Val Qual**	**LOQ**
VFAs (mg/L) EPA Method 300m	ACETIC ACID	NS	--	--	NS	--	--	NS	--	--	0.98	J	1
	BUTYRIC ACID	NS	--	--	NS	--	--	NS	--	--	ND	U	1
	FORMIC ACID	NS	--	--	NS	--	--	NS	--	--	ND	U	1
	LACTIC ACID	NS	--	--	NS	--	--	NS	--	--	ND	U	1
	PROPIONIC ACID	NS	--	--	NS	--	--	NS	--	--	ND	U	1
	PYRUVIC ACID	NS	--	--	NS	--	--	NS	--	--	ND	U	1
	VALERIC ACID	NS	--	--	NS	--	--	NS	--	--	ND	U	1
Dissolved Metals (mg/L) EPA Method 6010	IRON	NS	--	--	NS	--	--	NS	--	--	0.19		0.06
	MANGANESE	NS	--	--	NS	--	--	NS	--	--	2.05		0.006
δ2H (‰) Mass Spectrometry, USGS Reston, VA	DELTA2H	-91.11		-99	-87.24		-99	-85.66		-99	-85.6		-99
CSIA EDB δ13C ‰) Kuder et al, 2012	EDB δ	NS	--	--	NS	--	--	NS	--	--	NS	--	--
VOCs (µg/L) EPA Method 8260	1,1,2-TRICHLOROETHANE	NS	--	--	NS	--	--	NS	--	--	ND	U	50
	1,2,4-TRIMETHYLBENZENE	NS	--	--	NS	--	--	NS	--	--	214		50
	1,2-DIBROMOETHANE	NS	--	--	NS	--	--	NS	--	--	139		50
	1,2-DICHLOROETHANE	NS	--	--	NS	--	--	NS	--	--	ND	U	50
	1,3,5-TRIMETHYLBENZENE	NS	--	--	NS	--	--	NS	--	--	79.3	J	50
	2-BUTANONE	NS	--	--	NS	--	--	NS	--	--	ND	U	500
	2-CHLOROTOLUENE	NS	--	--	NS	--	--	NS	--	--	ND	U	50
	2-HEXANONE	NS	--	--	NS	--	--	NS	--	--	254	J	250
	4-METHYL-2-PENTANONE	NS	--	--	NS	--	--	NS	--	--	158	J	250
	ACETONE	NS	--	--	NS	--	--	NS	--	--	996	J	500
	BENZENE	NS	--	--	NS	--	--	NS	--	--	3370		50
	CARBON DISULFIDE	NS	--	--	NS	--	--	NS	--	--	ND	U	50
	CHLOROMETHANE	NS	--	--	NS	--	--	NS	--	--	ND	U	50
	DICHLORODIFLUOROMETHANE	NS	--	--	NS	--	--	NS	--	--	ND	U	100
	ETHYLBENZENE	NS	--	--	NS	--	--	NS	--	--	597		50
	ISOPROPYLBENZENE	NS	--	--	NS	--	--	NS	--	--	51.4	J	50
	METHYL TERT-BUTYL ETHER	NS	--	--	NS	--	--	NS	--	--	ND	U	50
	METHYLENE CHLORIDE	NS	--	--	NS	--	--	NS	--	--	ND	U	100
	NAPHTHALENE	NS	--	--	NS	--	--	NS	--	--	98.2	J	50
	N-BUTYLBENZENE	NS	--	--	NS	--	--	NS	--	--	ND	U	50
	N-PROPYLBENZENE	NS	--	--	NS	--	--	NS	--	--	56.5	J	50
	P-ISOPROPYLTOLUENE	NS	--	--	NS	--	--	NS	--	--	ND	U	50
	SEC-BUTYLBENZENE	NS	--	--	NS	--	--	NS	--	--	ND	U	50
	TERT-BUTYLBENZENE	NS	--	--	NS	--	--	NS	--	--	ND	U	50
	TOLUENE	NS	--	--	NS	--	--	NS	--	--	6890		50
	TRICHLOROETHENE	NS	--	--	NS	--	--	NS	--	--	ND	U	50
	TRICHLOROFLUOROMETHANE	NS	--	--	NS	--	--	NS	--	--	ND	U	100
	XYLENES	NS	--	--	NS	--	--	NS	--	--	2310		150

Notes:

a. EPA analytical methods listed are for the most recent sampling event.

b. Samples were collected using Geotech Bladder Pumps.

c. Samples were recollected (except for QuantArray-Chlor analysis) using replacement QED Bladder Pumps.

-- = Not applicable.

δ2H - Delta Deuterium.

0/00 - Per mille.

cells/mL = Cells per milliliter.

EPA = Environmental Protection Agency.

FD = Field duplicate.

ID = Identification.

J = Estimated value, concentration is less than LOQ but greater than laboratory method detection limit (DL).

J+ = Estimated value, concentration is less than LOQ but greater than laboratory method detection limit (DL); biased high.

J- = Estimated value, concentration is less than LOQ but greater than laboratory method detection limit (DL); biased low.

KAFB = Kirtland Air Force Base.

LOQ = Limit of Quantitation

µg/L = Microgram per liter.

mg/L = Milligram per liter.

NA = Not analyzed.

ND = Not detected.

NS = Not sampled.

REG = Regular/parent sample.

U = Analyte was not detected. The reported numerical value is at or below the LOQ.

UJ = Analyte was not detected. The reported value is estimated.

VAL QUAL = Validation qualifier.

VFA - Volatile fatty acid.

VOC = Volatile organic compound.

Table 10
Groundwater Analytical Results for KAFB-106EX2

	Phase Designation	Phase 1 Recirculation						Phase 1 Passive						Phase 2 Recirculation								
	Sample ID	106EX2-P1R-110117			106EX2-P1R-110117-FD			106EX2-P1P-111617			106EX2-P1P-112917			106EX2-P2R-011018			106EX2-P2R-011018-FD			106EX2-P2R-011618		
	Sample Date	11/1/2017			11/1/2017			11/16/2017			11/29/2017			1/10/2018			1/10/2018			1/16/2018		
	Sample Pupose	REG			FD			REG			REG			REG			FD			REG		
Chemical Class and Analytical Method[a]	**Parameter**	**Result**	**Val Qual**	**LOQ**	**Result**	**Val Qual**	**LOQ**	**Result**	**Val Qual**	**LOQ**	**Result**	**Val Qual**	**LOQ**	**Result**	**Val Qual**	**LOQ**	**Result**	**Val Qual**	**LOQ**	**Result**	**Val Qual**	**LOQ**
Microbial Community (cells/mL) QuantArray-Chlor	1,1 DCA Reductase (DCA)	NS	--	--	NS	--	--	NS	--	--	ND	U	5	NS	--	--	NS	--	--	NS	--	--
	1,2 DCA Reductase (DCAR)	NS	--	--	NS	--	--	NS	--	--	ND	U	5	NS	--	--	NS	--	--	NS	--	--
	BAV1 Vinyl Chloride Reductase (BVC)	NS	--	--	NS	--	--	NS	--	--	0.7		0.5	NS	--	--	NS	--	--	NS	--	--
	Chloroform Reductase (CFR)	NS	--	--	NS	--	--	NS	--	--	ND	U	5	NS	--	--	NS	--	--	NS	--	--
	Dehalobacter DCM (DCM)	NS	--	--	NS	--	--	NS	--	--	ND	U	5	NS	--	--	NS	--	--	NS	--	--
	Dehalobacter spp. (DHBt)	NS	--	--	NS	--	--	NS	--	--	61500		5	NS	--	--	NS	--	--	NS	--	--
	Dehalobium chlorocoercia (DECO)	NS	--	--	NS	--	--	NS	--	--	7710		5	NS	--	--	NS	--	--	NS	--	--
	Dehalococcoides (DHC)	NS	--	--	NS	--	--	NS	--	--	4.4		0.5	NS	--	--	NS	--	--	NS	--	--
	Dehalogenimonas spp. (DHG)	NS	--	--	NS	--	--	NS	--	--	ND	U	5	NS	--	--	NS	--	--	NS	--	--
	Desulfitobacterium spp. (DSB)	NS	--	--	NS	--	--	NS	--	--	75900		5	NS	--	--	NS	--	--	NS	--	--
	Desulfuromonas spp. (DSM)	NS	--	--	NS	--	--	NS	--	--	5.1		5	NS	--	--	NS	--	--	NS	--	--
	Dichloromethane Dehalogenase (DCMA)	NS	--	--	NS	--	--	NS	--	--	ND	U	5	NS	--	--	NS	--	--	NS	--	--
	Epoxyalkane Transferase (EtnE)	NS	--	--	NS	--	--	NS	--	--	ND	U	5	NS	--	--	NS	--	--	NS	--	--
	Ethene Monooxygenase (EtnC)	NS	--	--	NS	--	--	NS	--	--	ND	U	5	NS	--	--	NS	--	--	NS	--	--
	Methanogens (MGN)	NS	--	--	NS	--	--	NS	--	--	ND	U	5	NS	--	--	NS	--	--	NS	--	--
	PCE Reductase (PCE-1)	NS	--	--	NS	--	--	NS	--	--	NS	--	--	NS	--	--	NS	--	--	NS	--	--
	Phenol Hydroxylase (PHE)	NS	--	--	NS	--	--	NS	--	--	19200		5	NS	--	--	NS	--	--	NS	--	--
	PMMO	NS	--	--	NS	--	--	NS	--	--	24.1		5	NS	--	--	NS	--	--	NS	--	--
	Soluble Methane Monooxygenase (SMMO)	NS	--	--	NS	--	--	NS	--	--	ND	U	5	NS	--	--	NS	--	--	NS	--	--
	Sulfate Reducing Bacteria (APS)	NS	--	--	NS	--	--	NS	--	--	79600		5	NS	--	--	NS	--	--	NS	--	--
	tceA Reductase (TCE)	NS	--	--	NS	--	--	NS	--	--	5		0.5	NS	--	--	NS	--	--	NS	--	--
	Toluene Dioxygenase (TOD)	NS	--	--	NS	--	--	NS	--	--	ND	U	5	NS	--	--	NS	--	--	NS	--	--
	Toluene Monooxygenase (RMO)	NS	--	--	NS	--	--	NS	--	--	94800		5	NS	--	--	NS	--	--	NS	--	--
	Toluene Monooxygenase 2 (RDEG)	NS	--	--	NS	--	--	NS	--	--	50500		5	NS	--	--	NS	--	--	NS	--	--
	Total Eubacteria (EBAC)	NS	--	--	NS	--	--	NS	--	--	6810000		5	NS	--	--	NS	--	--	NS	--	--
	trans-1,2-DCE Reductase (TDR)	NS	--	--	NS	--	--	NS	--	--	NS	--	--	NS	--	--	NS	--	--	NS	--	--
	Trichlorobenzene Dioxygenase (TCBO)	NS	--	--	NS	--	--	NS	--	--	93.3		5	NS	--	--	NS	--	--	NS	--	--
	Vinyl Chloride Reductase (VCR)	NS	--	--	NS	--	--	NS	--	--	7.1		0.5	NS	--	--	NS	--	--	NS	--	--
EDB (µg/L) EPA Method 8011	1,2-DIBROMOETHANE	NS	--	--	NS	--	--	147		3.8	118		4.8	61.4		9.59	70.2		9.49	90.1		3.78
Fluorometric (µg/L) Spectrofluorophotometry	FLUORESCEIN	8.221		0.01	8.337		0.01	6.291		0.01	5.154		0.01	NS	--	--	NS	--	--	NS	--	--
Reduced Gases (µg/L) RSKSOP-175	ACETYLENE	NS	--	--	NS	--	--	ND	U	10	ND	U	10	ND	U	10	ND	U	10	ND	U	10
	ETHANE	NS	--	--	NS	--	--	ND	U	4	1.76	J	4	1.56	J	4	1.65	J	4	2.25	J	4
	ETHYLENE	NS	--	--	NS	--	--	ND	U	5	1.81	J	5	3.1	J	5	3.2	J	5	3.92	J	5
	METHANE	NS	--	--	NS	--	--	ND	U	2	1.46	J	2	1.6	J	2	1.89	J	2	2.15		2
	PROPANE	NS	--	--	NS	--	--	ND	U	6	ND	U	6	ND	U	6	ND	U	6	ND	U	6
General Chemistry (mg/L) SM2320b, EPA Method 300, EPA Method 353.2, SM4500 PE	ALKALINITY	NS	--	--	NS	--	--	346		1	329		1	350		1	354		1	354		1
	BROMIDE	NS	--	--	NS	--	--	0.932		0.25	0.434	J	0.25	0.848		0.25	0.844		0.25	0.873		0.25
	CHLORIDE	NS	--	--	NS	--	--	90.8		0.66	39		0.66	87.5		0.66	87.2		0.66	91.2		0.66
	IODIDE	NS	--	--	NS	--	--	ND	U	0.75	ND	U	0.75	0.82	J	0.75	0.83	J	0.75	ND	U	0.75
	NITRATE	NS	--	--	NS	--	--	NS	--	--	NS	--	--	NS	--	--	NS	--	--	NS	--	--
	NITRITE	NS	--	--	NS	--	--	NS	--	--	NS	--	--	NS	--	--	NS	--	--	NS	--	--
	NITROGEN, NITRATE-NITRITE	NS	--	--	NS	--	--	ND	U	0.375	ND	U	0.375	ND	U	0.375	ND	U	0.375	ND	U	0.375
	O-PHOSPHATE (AS P)	NS	--	--	NS	--	--	0.0116	J	0.02	ND	U	0.02	0.0172	J	0.02	0.0136	J	0.02	ND	U	0.02
	SULFATE	NS	--	--	NS	--	--	28.6		2	12.9		2	23.5	J+	2	24	J+	2	20.9		2

Table 10
Groundwater Analytical Results for KAFB-106EX2

	Phase Designation	Phase 1 Recirculation						Phase 1 Passive						Phase 2 Recirculation								
	Sample ID	106EX2-P1R-110117			106EX2-P1R-110117-FD			106EX2-P1P-111617			106EX2-P1P-112917			106EX2-P2R-011018			106EX2-P2R-011018-FD			106EX2-P2R-011618		
	Sample Date	11/1/2017			11/1/2017			11/16/2017			11/29/2017			1/10/2018			1/10/2018			1/16/2018		
	Sample Pupose	REG			FD			REG			REG			REG			FD			REG		
Chemical Class and Analytical Method[a]	Parameter	Result	Val Qual	LOQ	Result	Val Qual	LOQ	Result	Val Qual	LOQ	Result	Val Qual	LOQ	Result	Val Qual	LOQ	Result	Val Qual	LOQ	Result	Val Qual	LOQ
VFAs (mg/L) EPA Method 300m	ACETIC ACID	NS	--	--	NS	--	--	1.18		1	1.5		1	3.74		1	7.32		1	13.8		1
	BUTYRIC ACID	NS	--	--	NS	--	--	ND	U	1	ND	U	1	ND	U	1	ND	U	1	ND	U	1
	FORMIC ACID	NS	--	--	NS	--	--	ND	U	1	ND	U	1	ND	U	1	ND	U	1	ND	U	1
	LACTIC ACID	NS	--	--	NS	--	--	ND	U	1	ND	U	1	0.79	J	1	1.63		1	1.35		1
	PROPIONIC ACID	NS	--	--	NS	--	--	ND	U	1	ND	U	1	1.52		1	3.3		1	3.37		1
	PYRUVIC ACID	NS	--	--	NS	--	--	ND	U	1	ND	U	1	ND	U	1	ND	U	1	ND	U	1
	VALERIC ACID	NS	--	--	NS	--	--	ND	U	1	ND	U	1	ND	U	1	ND	U	1	ND	U	1
Dissolved Metals (mg/L) EPA Method 6010	IRON	NS	--	--	NS	--	--	0.701		0.06	1.03		0.06	0.352		0.06	0.356		0.06	0.358		0.06
	MANGANESE	NS	--	--	NS	--	--	2.5		0.006	2.93		0.006	2.87		0.006	2.87		0.006	3.01		0.006
δ2H (‰) Mass Spectrometry, USGS Reston, VA	DELTA2H	-84		-99	-83		-99	-86.66		-99	-86.95		-99	NS	--	--	NS	--	--	NS	--	--
CSIA EDB δ13C ‰) Kuder et al, 2012	EDB δ	NS	--	--	NS	--	--	NS	--	--	-17.3 ±2‰	--	--	NS	--	--	NS	--	--	NS	--	--
VOCs (µg/L) EPA Method 8260	1,1,2-TRICHLOROETHANE	NS	--	--	NS	--	--	ND	U	50	ND	U	25	ND	U	50	ND	U	50	ND	U	50
	1,2,4-TRIMETHYLBENZENE	NS	--	--	NS	--	--	186		50	180		25	256		50	273		50	272		50
	1,2-DIBROMOETHANE	NS	--	--	NS	--	--	134		50	133		25	118		50	112		50	117		50
	1,2-DICHLOROETHANE	NS	--	--	NS	--	--	ND	U	50	ND	U	25	ND	U	50	ND	U	50	ND	U	50
	1,3,5-TRIMETHYLBENZENE	NS	--	--	NS	--	--	64.8	J	50	67.4		25	89.8	J	50	93	J	50	96.6	J	50
	2-BUTANONE	NS	--	--	NS	--	--	ND	U	500	236	J	250	ND	U	500	ND	U	500	ND	U	500
	2-CHLOROTOLUENE	NS	--	--	NS	--	--	ND	U	50	ND	U	25	ND	U	50	ND	U	50	ND	U	50
	2-HEXANONE	NS	--	--	NS	--	--	243	J	250	278		125	231	J	250	197	J	250	162	J	250
	4-METHYL-2-PENTANONE	NS	--	--	NS	--	--	157	J	250	165	J	125	ND	U	250	ND	U	250	ND	U	250
	ACETONE	NS	--	--	NS	--	--	1020	J-	500	1080		250	954	J	500	829	J	500	668	J	500
	BENZENE	NS	--	--	NS	--	--	3250		50	3660		25	4260		50	4240		50	4070		50
	CARBON DISULFIDE	NS	--	--	NS	--	--	ND	U	50	ND	U	25	ND	U	50	ND	U	50	ND	U	50
	CHLOROMETHANE	NS	--	--	NS	--	--	ND	U	50	ND	U	25	50.5		50	61.6		50	ND	U	50
	DICHLORODIFLUOROMETHANE	NS	--	--	NS	--	--	ND	U	100	ND	U	50	ND	U	100	ND	U	100	ND	U	100
	ETHYLBENZENE	NS	--	--	NS	--	--	594		50	689		25	882		50	871		50	855		50
	ISOPROPYLBENZENE	NS	--	--	NS	--	--	47.3	J	50	56.9		25	66.3	J	50	66.9	J	50	66.4	J	50
	METHYL TERT-BUTYL ETHER	NS	--	--	NS	--	--	ND	U	50	ND	U	25	ND	U	50	ND	U	50	ND	U	50
	METHYLENE CHLORIDE	NS	--	--	NS	--	--	ND	U	100	ND	U	50	58	J	100	50.4	J	100	ND	U	100
	NAPHTHALENE	NS	--	--	NS	--	--	94.1	J	50	89.2		25	101		50	91.5		50	95.3	J	50
	N-BUTYLBENZENE	NS	--	--	NS	--	--	ND	U	50	ND	U	25	ND	U	50	ND	U	50	ND	U	50
	N-PROPYLBENZENE	NS	--	--	NS	--	--	50.2	J	50	58.6		25	69.2	J	50	67.8	J	50	65.6	J	50
	P-ISOPROPYLTOLUENE	NS	--	--	NS	--	--	ND	U	50	14.6	J	25	28.6	J	50	27.6	J	50	25.9	J	50
	SEC-BUTYLBENZENE	NS	--	--	NS	--	--	ND	U	50	12.5	J	25	ND	U	50	ND	U	50	ND	U	50
	TERT-BUTYLBENZENE	NS	--	--	NS	--	--	ND	U	50	ND	U	25	ND	U	50	ND	U	50	ND	U	50
	TOLUENE	NS	--	--	NS	--	--	6480		50	6940		25	8070		50	8110		50	8410		50
	TRICHLOROETHENE	NS	--	--	NS	--	--	ND	U	50	ND	U	25	ND	U	50	ND	U	50	ND	U	50
	TRICHLOROFLUOROMETHANE	NS	--	--	NS	--	--	ND	U	100	ND	U	50	ND	U	100	ND	U	100	ND	U	100
	XYLENES	NS	--	--	NS	--	--	2120		150	2330		75	2870		150	2880		150	2680		150

Notes:

a. EPA analytical methods listed are for the most recent sampling event.

b. Samples were collected using Geotech Bladder Pumps.

c. Samples were recollected (except for QuantArray-Chlor analysis) using replacement QED Bladder Pumps.

-- = Not applicable.

δ2H - Delta Deuterium.

0/00 - Per mille.

cells/mL = Cells per milliliter.

EPA = Environmental Protection Agency.

FD = Field duplicate.

ID = Identification.

J = Estimated value, concentration is less than LOQ but greater than laboratory method detection limit (DL).

J+ = Estimated value, concentration is less than LOQ but greater than laboratory method detection limit (DL); biased high.

J- = Estimated value, concentration is less than LOQ but greater than laboratory method detection limit (DL); biased low.

KAFB = Kirtland Air Force Base.

LOQ = Limit of Quantitation

µg/L = Microgram per liter.

mg/L = Milligram per liter.

NA = Not analyzed.

ND = Not detected.

NS = Not sampled.

REG = Regular/parent sample.

U = Analyte was not detected. The reported numerical value is at or below the LOQ.

UJ = Analyte was not detected. The reported value is estimated.

VAL QUAL = Validation qualifier.

VFA - Volatile fatty acid.

VOC = Volatile organic compound.

Table 10
Groundwater Analytical Results for KAFB-106EX2

	Phase Designation	Phase 2 Recirculation			Phase 2 Passive											
	Sample ID	106EX2-P2R-012518			106EX2-P2P-030718			106EX2-P2P-041118			106EX2-P2P-050918			106EX2-P2P-061418		
	Sample Date	1/25/2018			3/7/2018			4/11/2018			5/9/2018			6/14/2018		
	Sample Pupose	REG			REG			REG			REG			REG		
Chemical Class and Analytical Method[a]	**Parameter**	**Result**	**Val Qual**	**LOQ**	**Result**	**Val Qual**	**LOQ**	**Result**	**Val Qual**	**LOQ**	**Result**	**Val Qual**	**LOQ**	**Result**	**Val Qual**	**LOQ**
Microbial Community (cells/mL) QuantArray-Chlor	1,1 DCA Reductase (DCA)	ND	U	17.9	NS	--	--	NS	--	--	ND	U	9.1	NS	--	--
	1,2 DCA Reductase (DCAR)	ND	U	17.9	NS	--	--	NS	--	--	ND	U	9.1	NS	--	--
	BAV1 Vinyl Chloride Reductase (BVC)	ND	U	1.8	NS	--	--	NS	--	--	ND	U	0.9	NS	--	--
	Chloroform Reductase (CFR)	ND	U	17.9	NS	--	--	NS	--	--	ND	U	9.1	NS	--	--
	Dehalobacter DCM (DCM)	ND	U	17.9	NS	--	--	NS	--	--	990		9.1	NS	--	--
	Dehalobacter spp. (DHBt)	321000		17.9	NS	--	--	NS	--	--	140000		9.1	NS	--	--
	Dehalobium chlorocoercia (DECO)	33700		17.9	NS	--	--	NS	--	--	18300		9.1	NS	--	--
	Dehalococcoides (DHC)	ND	U	1.8	NS	--	--	NS	--	--	ND	U	0.9	NS	--	--
	Dehalogenimonas spp. (DHG)	ND	U	17.9	NS	--	--	NS	--	--	1110		9.1	NS	--	--
	Desulfitobacterium spp. (DSB)	414000		17.9	NS	--	--	NS	--	--	57000		9.1	NS	--	--
	Desulfuromonas spp. (DSM)	67.9		17.9	NS	--	--	NS	--	--	19900		9.1	NS	--	--
	Dichloromethane Dehalogenase (DCMA)	ND	U	17.9	NS	--	--	NS	--	--	ND	U	9.1	NS	--	--
	Epoxyalkane Transferase (EtnE)	ND	U	17.9	NS	--	--	NS	--	--	ND	U	9.1	NS	--	--
	Ethene Monooxygenase (EtnC)	ND	U	17.9	NS	--	--	NS	--	--	ND	U	9.1	NS	--	--
	Methanogens (MGN)	15.5	J	17.9	NS	--	--	NS	--	--	33.9		9.1	NS	--	--
	PCE Reductase (PCE-1)	ND	U	17.9	NS	--	--	NS	--	--	ND	U	9.1	NS	--	--
	Phenol Hydroxylase (PHE)	74600		17.9	NS	--	--	NS	--	--	33600		9.1	NS	--	--
	PMMO	NS	--	--	NS	--	--	NS	--	--	NS	--	--	NS	--	--
	Soluble Methane Monooxygenase (SMMO)	ND	U	17.9	NS	--	--	NS	--	--	ND	U	9.1	NS	--	--
	Sulfate Reducing Bacteria (APS)	380000		17.9	NS	--	--	NS	--	--	46400		9.1	NS	--	--
	tceA Reductase (TCE)	ND	U	1.8	NS	--	--	NS	--	--	ND	U	0.9	NS	--	--
	Toluene Dioxygenase (TOD)	ND	U	17.9	NS	--	--	NS	--	--	ND	U	9.1	NS	--	--
	Toluene Monooxygenase (RMO)	83200		17.9	NS	--	--	NS	--	--	25000		9.1	NS	--	--
	Toluene Monooxygenase 2 (RDEG)	79800		17.9	NS	--	--	NS	--	--	18800		9.1	NS	--	--
	Total Eubacteria (EBAC)	28900000		17.9	NS	--	--	NS	--	--	10800000		9.1	NS	--	--
	trans-1,2-DCE Reductase (TDR)	ND	U	17.9	NS	--	--	NS	--	--	ND	U	9.1	NS	--	--
	Trichlorobenzene Dioxygenase (TCBO)	934		17.9	NS	--	--	NS	--	--	ND	U	9.1	NS	--	--
	Vinyl Chloride Reductase (VCR)	ND	U		NS	--	--	NS	--	--	ND	U		NS	--	--
EDB (µg/L) EPA Method 8011	1,2-DIBROMOETHANE	90.9	J+	9.62	94.8	J+	9.52	69	J	9.59	92.5		3.85	101		3.83
Fluorometric (µg/L) Spectrofluorophotometry	FLUORESCEIN	NS	--	--	NS	--	--	NS	--	--	NS	--	--	NS	--	--
Reduced Gases (µg/L) RSKSOP-175	ACETYLENE	ND	U	10	ND	U	10	ND	U	10	ND	U	10	ND	UJ	10
	ETHANE	2.41	J	4	3.2	J	4	5.1		4	6.8		4	6.9	J	4
	ETHYLENE	4.7	J	5	5.3		5	7.05		5	9.6		5	11.4	J	5
	METHANE	2.64		2	6.9		2	15.2		2	30.4		2	15.5	J	2
	PROPANE	2.42	J	6	3.1	J	6	5.9	J	6	8.6		6	9.4	J	6
General Chemistry (mg/L) SM2320b, EPA Method 300, EPA Method 353.2, SM4500 PE	ALKALINITY	363		1	377		1	380		1	373		1	419	J-	1
	BROMIDE	0.764		0.125	0.92	J	0.625	1.02		0.25	1.14		0.25	1.06	J	0.625
	CHLORIDE	76.2		0.66	107		1.65	130		0.66	143		0.66	136		1.65
	IODIDE	2.7		0.75	1.6		0.75	0.57	J	0.75	0.31	J	0.75	0.47	J	0.75
	NITRATE	NS	--	--	NS	--	--	ND	U	0.2	ND	U	0.2	ND	U	0.5
	NITRITE	NS	--	--	NS	--	--	ND	U	0.2	ND	U	0.2	ND	U	0.5
	NITROGEN, NITRATE-NITRITE	ND	U	0.375	ND	U	0.375	NS	--	--	NS	--	--	NS	--	--
	O-PHOSPHATE (AS P)	ND	U	0.02	0.0131	J	0.02	0.0202		0.02	0.0382	J	0.02	0.0185		0.02
	SULFATE	19.4		2	32.1		5	38.5		2	39.7		2	35.8		5

Table 10
Groundwater Analytical Results for KAFB-106EX2

	Phase Designation	Phase 2 Recirculation			Phase 2 Passive											
	Sample ID	106EX2-P2R-012518			106EX2-P2P-030718			106EX2-P2P-041118			106EX2-P2P-050918			106EX2-P2P-061418		
	Sample Date	1/25/2018			3/7/2018			4/11/2018			5/9/2018			6/14/2018		
	Sample Pupose	REG			REG			REG			REG			REG		
Chemical Class and Analytical Method[a]	**Parameter**	**Result**	**Val Qual**	**LOQ**	**Result**	**Val Qual**	**LOQ**	**Result**	**Val Qual**	**LOQ**	**Result**	**Val Qual**	**LOQ**	**Result**	**Val Qual**	**LOQ**
VFAs (mg/L) EPA Method 300m	ACETIC ACID	26.1		1	11.5		1	9.5		1	11		1	8	J	1
	BUTYRIC ACID	ND	U	1	ND	U	1	ND	U	1	ND	U	1	ND	UJ	1
	FORMIC ACID	ND	U	1	ND	U	1	ND	U	1	ND	U	1	ND	UJ	1
	LACTIC ACID	1.64		1	ND	U	1	0.65		1	1	J	1	0.6	J	1
	PROPIONIC ACID	6.86		1	2.2		1	1		1	ND	U	1	ND	UJ	1
	PYRUVIC ACID	ND	U	1	ND	U	1	ND	U	1	ND	U	1	ND	UJ	1
	VALERIC ACID	ND	U	1	ND	U	1	ND	U	1	ND	U	1	ND	UJ	1
Dissolved Metals (mg/L) EPA Method 6010	IRON	0.403	J-	0.06	2.19		0.06	2.44	J-	0.06	3.82		0.06	4.21		0.06
	MANGANESE	2.96	J-	0.006	4.11		0.006	4.86	J+	0.006	5.02		0.006	5.24		0.006
δ2H (‰) Mass Spectrometry, USGS Reston, VA	DELTA2H	NS	--	--	NS	--	--	NS	--	--	NS	--	--	NS	--	--
CSIA EDB δ13C ‰) Kuder et al, 2012	EDB δ	-17.1 ±2‰	--	--	NS	--	--	NS	--	--	-17.9 ±1‰	--	--	NS	--	--
VOCs (µg/L) EPA Method 8260	1,1,2-TRICHLOROETHANE	ND	U	50	ND	U	50	ND	U	50	ND	U	50	ND	U	25
	1,2,4-TRIMETHYLBENZENE	301		50	251		50	306		50	301		50	367		25
	1,2-DIBROMOETHANE	122		50	116		50	96.9	J	50	94.8	J	50	91		25
	1,2-DICHLOROETHANE	ND	U	50	ND	U	50	ND	U	50	ND	U	50	ND	U	25
	1,3,5-TRIMETHYLBENZENE	110		50	84.2	J	50	109		50	103		50	124		25
	2-BUTANONE	ND	U	500	ND	U	500	ND	U	500	ND	U	500	180	J	250
	2-CHLOROTOLUENE	ND	U	50	ND	U	50	ND	U	50	ND	U	50	ND	U	25
	2-HEXANONE	191	J	250	200	J+	250	254	J	250	245	J	250	259		125
	4-METHYL-2-PENTANONE	ND	U	250	136	J	250	177	J	250	146	J	250	129	J	125
	ACETONE	643	J	500	788	J	500	877	J	500	498	J	500	561		250
	BENZENE	4250		50	4180		50	3940		50	4170		50	4360		25
	CARBON DISULFIDE	ND	U	50	ND	U	50	ND	U	50	ND	U	50	ND	U	25
	CHLOROMETHANE	ND	U	50	ND	U	50	ND	U	50	ND	U	50	ND	U	25
	DICHLORODIFLUOROMETHANE	ND	U	100	ND	U	100	ND	U	100	ND	U	100	ND	U	50
	ETHYLBENZENE	994		50	923		50	954		50	898		50	1070		25
	ISOPROPYLBENZENE	74.4	J	50	91.7	J	50	109		50	104		50	118		25
	METHYL TERT-BUTYL ETHER	ND	U	50	ND	U	50	ND	U	50	ND	U	50	ND	U	25
	METHYLENE CHLORIDE	ND	U	100	ND	U	100	ND	U	100	ND	U	100	28.4	J	50
	NAPHTHALENE	101		50	82.5	J	50	126		50	130		50	138		25
	N-BUTYLBENZENE	ND	U	50	ND	U	50	ND	U	50	ND	U	50	18.9	J	25
	N-PROPYLBENZENE	86.8	J	50	73.3	J	50	90.5	J	50	86.4	J	50	113		25
	P-ISOPROPYLTOLUENE	ND	U	50	ND	U	50	39.9	J	50	45.1	J	50	ND	U	25
	SEC-BUTYLBENZENE	ND	U	50	ND	U	50	ND	U	50	ND	U	50	21.9	J	25
	TERT-BUTYLBENZENE	ND	U	50	ND	U	50	ND	U	50	ND	U	50	ND	U	25
	TOLUENE	9530		50	8630		50	7640		50	7640		50	8030		25
	TRICHLOROETHENE	ND	U	50	ND	U	50	ND	U	50	ND	U	50	ND	U	25
	TRICHLOROFLUOROMETHANE	ND	U	100	ND	U	100	ND	U	100	ND	U	100	ND	U	50
	XYLENES	3020		150	2850		150	2910		150	2950		150	3670		75

Notes:

a. EPA analytical methods listed are for the most recent sampling event.

b. Samples were collected using Geotech Bladder Pumps.

c. Samples were recollected (except for QuantArray-Chlor analysis) using replacement QED Bladder Pumps.

-- = Not applicable.

δ2H - Delta Deuterium.

0/00 - Per mille.

cells/mL = Cells per milliliter.

EPA = Environmental Protection Agency.

FD = Field duplicate.

ID = Identification.

J = Estimated value, concentration is less than LOQ but greater than laboratory method detection limit (DL).

J+ = Estimated value, concentration is less than LOQ but greater than laboratory method detection limit (DL); biased high.

J- = Estimated value, concentration is less than LOQ but greater than laboratory method detection limit (DL); biased low.

KAFB = Kirtland Air Force Base.

LOQ = Limit of Quantitation

µg/L = Microgram per liter.

mg/L = Milligram per liter.

NA = Not analyzed.

ND = Not detected.

NS = Not sampled.

REG = Regular/parent sample.

U = Analyte was not detected. The reported numerical value is at or below the LOQ.

UJ = Analyte was not detected. The reported value is estimated.

VAL QUAL = Validation qualifier.

VFA - Volatile fatty acid.

VOC = Volatile organic compound.

Table 10
Groundwater Analytical Results for KAFB-106EX2

	Phase Designation	Phase 3 Recirculation															Phase 3 Passive		
	Sample ID	106EX2-P3R-080818			106EX2-P3R-080818-FD			106EX2-P3R-081618			106EX2-P3R-082218			106EX2-P3R-082918			106EX2-P3P-091218		
	Sample Date	8/8/2018			8/8/2018			8/16/2018			8/22/2018			8/29/2018			9/12/2018		
	Sample Pupose	REG			FD			REG			REG			REG			REG		
Chemical Class and Analytical Method[a]	Parameter	Result	Val Qual	LOQ	Result	Val Qual	LOQ	Result	Val Qual	LOQ	Result	Val Qual	LOQ	Result	Val Qual	LOQ	Result	Val Qual	LOQ
Microbial Community (cells/mL) QuantArray-Chlor	1,1 DCA Reductase (DCA)	NS	--	--	NS	--	--	NS	--	--	ND	U	4.9	NS	--	--	NS	--	--
	1,2 DCA Reductase (DCAR)	NS	--	--	NS	--	--	NS	--	--	ND	U	4.9	NS	--	--	NS	--	--
	BAV1 Vinyl Chloride Reductase (BVC)	NS	--	--	NS	--	--	NS	--	--	ND	U	0.5	NS	--	--	NS	--	--
	Chloroform Reductase (CFR)	NS	--	--	NS	--	--	NS	--	--	ND	U	4.9	NS	--	--	NS	--	--
	Dehalobacter DCM (DCM)	NS	--	--	NS	--	--	NS	--	--	ND	U	4.9	NS	--	--	NS	--	--
	Dehalobacter spp. (DHBt)	NS	--	--	NS	--	--	NS	--	--	248000		4.9	NS	--	--	NS	--	--
	Dehalobium chlorocoercia (DECO)	NS	--	--	NS	--	--	NS	--	--	13000		4.9	NS	--	--	NS	--	--
	Dehalococcoides (DHC)	NS	--	--	NS	--	--	NS	--	--	ND	U	0.5	NS	--	--	NS	--	--
	Dehalogenimonas spp. (DHG)	NS	--	--	NS	--	--	NS	--	--	ND	U	4.9	NS	--	--	NS	--	--
	Desulfitobacterium spp. (DSB)	NS	--	--	NS	--	--	NS	--	--	62800		4.9	NS	--	--	NS	--	--
	Desulfuromonas spp. (DSM)	NS	--	--	NS	--	--	NS	--	--	ND	U	4.9	NS	--	--	NS	--	--
	Dichloromethane Dehalogenase (DCMA)	NS	--	--	NS	--	--	NS	--	--	ND	U	4.9	NS	--	--	NS	--	--
	Epoxyalkane Transferase (EtnE)	NS	--	--	NS	--	--	NS	--	--	ND	U	4.9	NS	--	--	NS	--	--
	Ethene Monooxygenase (EtnC)	NS	--	--	NS	--	--	NS	--	--	ND	U	4.9	NS	--	--	NS	--	--
	Methanogens (MGN)	NS	--	--	NS	--	--	NS	--	--	529		4.9	NS	--	--	NS	--	--
	PCE Reductase (PCE-1)	NS	--	--	NS	--	--	NS	--	--	ND	U	4.9	NS	--	--	NS	--	--
	Phenol Hydroxylase (PHE)	NS	--	--	NS	--	--	NS	--	--	10900		4.9	NS	--	--	NS	--	--
	PMMO	NS	--	--	NS	--	--	NS	--	--	NS	--	--	NS	--	--	NS	--	--
	Soluble Methane Monooxygenase (SMMO)	NS	--	--	NS	--	--	NS	--	--	2040		4.9	NS	--	--	NS	--	--
	Sulfate Reducing Bacteria (APS)	NS	--	--	NS	--	--	NS	--	--	197000		4.9	NS	--	--	NS	--	--
	tceA Reductase (TCE)	NS	--	--	NS	--	--	NS	--	--	ND	U	0.5	NS	--	--	NS	--	--
	Toluene Dioxygenase (TOD)	NS	--	--	NS	--	--	NS	--	--	ND	U	4.9	NS	--	--	NS	--	--
	Toluene Monooxygenase (RMO)	NS	--	--	NS	--	--	NS	--	--	32100		4.9	NS	--	--	NS	--	--
	Toluene Monooxygenase 2 (RDEG)	NS	--	--	NS	--	--	NS	--	--	6480		4.9	NS	--	--	NS	--	--
	Total Eubacteria (EBAC)	NS	--	--	NS	--	--	NS	--	--	9990000		4.9	NS	--	--	NS	--	--
	trans-1,2-DCE Reductase (TDR)	NS	--	--	NS	--	--	NS	--	--	ND	U	4.9	NS	--	--	NS	--	--
	Trichlorobenzene Dioxygenase (TCBO)	NS	--	--	NS	--	--	NS	--	--	ND	U	4.9	NS	--	--	NS	--	--
	Vinyl Chloride Reductase (VCR)	NS	--	--	NS	--	--	NS	--	--	ND	U		NS	--	--	NS	--	--
EDB (µg/L) EPA Method 8011	1,2-DIBROMOETHANE	82		0.3	74		0.31	82		0.31	47		0.0003	97		0.3	60		0.29
Fluorometric (µg/L) Spectrofluorophotometry	FLUORESCEIN	NS	--	--	NS	--	--	NS	--	--	NS	--	--	NS	--	--	NS	--	--
Reduced Gases (µg/L) RSKSOP-175	ACETYLENE	ND	U	10	ND	U	10	ND	U	10	ND	U	10	ND	U	10	ND	U	10
	ETHANE	4.9		4	4.8		4	4.7		4	4.5		4	4.5		4	4.7		4
	ETHYLENE	9		5	8.5		5	7.9		5	8.1		5	8.5		5	9.8		5
	METHANE	10.3		2	10		2	28.2		2	57.7		2	105.5		2	279.7		2
	PROPANE	5.3	J	6	5.4	J	6	5.3	J	6	5.1	J	6	5.1	J	6	5.5	J	6
General Chemistry (mg/L) SM2320b, EPA Method 300, EPA Method 353.2, SM4500 PE	ALKALINITY	380		5	370		5	380		5	400		5	400		5	410		5
	BROMIDE	1.7		1	1.7		1	1.2		0.5	1.1		0.5	1.1		0.5	0.99		0.5
	CHLORIDE	91		1	90		1	88		0.5	85		0.5	87		0.5	88		0.5
	IODIDE	3.9		0.75	4.8		0.75	4.2		0.75	5.8		0.75	4.6		0.75	4.9		0.75
	NITRATE	NS	--	--	NS	--	--	NS	--	--	NS	--	--	NS	--	--	NS	--	--
	NITRITE	NS	--	--	NS	--	--	NS	--	--	NS	--	--	NS	--	--	NS	--	--
	NITROGEN, NITRATE-NITRITE	ND	R	0.05	ND	R	0.05	ND	U	0.05	ND		0.05	ND	U	0.05	0.11		0.05
	O-PHOSPHATE (AS P)	ND	R	0.15	ND	R	0.15	ND	U	0.15	ND		0.15	ND	U	0.15	ND	U	0.15
	SULFATE	28		2	28		2	26		1	24		1	23		1	18		1

Table 10
Groundwater Analytical Results for KAFB-106EX2

	Phase Designation	Phase 3 Recirculation															Phase 3 Passive		
	Sample ID	106EX2-P3R-080818			106EX2-P3R-080818-FD			106EX2-P3R-081618			106EX2-P3R-082218			106EX2-P3R-082918			106EX2-P3P-091218		
	Sample Date	8/8/2018			8/8/2018			8/16/2018			8/22/2018			8/29/2018			9/12/2018		
	Sample Pupose	REG			FD			REG			REG			REG			REG		
Chemical Class and Analytical Method[a]	**Parameter**	**Result**	**Val Qual**	**LOQ**	**Result**	**Val Qual**	**LOQ**	**Result**	**Val Qual**	**LOQ**	**Result**	**Val Qual**	**LOQ**	**Result**	**Val Qual**	**LOQ**	**Result**	**Val Qual**	**LOQ**
VFAs (mg/L) EPA Method 300m	ACETIC ACID	13.9		1	14		1	23.5		10	27.7		10	30.5		10	43.7		10
	BUTYRIC ACID	ND	U	1	ND	U	1	ND	U	1	ND	U	1	ND	U	1	ND	U	1
	FORMIC ACID	ND	U	1	ND	U	1	ND	U	1	ND	U	1	ND	U	1	ND	U	1
	LACTIC ACID	ND	U	1	ND	U	1	0.7	J	1	0.6	J	1	ND	U	1	1		1
	PROPIONIC ACID	ND	U	1	ND	U	1	ND	U	1	ND	U	1	7.3		1	10.8		1
	PYRUVIC ACID	ND	U	1	ND	U	1	ND	U	1	ND	U	1	ND	U	1	ND	U	1
	VALERIC ACID	ND	U	1	ND	U	1	ND	U	1	ND	U	1	ND	U	1	ND	U	1
Dissolved Metals (mg/L) EPA Method 6010	IRON	1.1		0.05	1.2		0.05	1.1		0.05	1.2		0.05	1.1		0.05	1.6		0.05
	MANGANESE	4.4		0.003	4.7		0.003	4.8		0.003	4.9		0.003	5.2		0.003	5.6		0.003
δ2H (‰) Mass Spectrometry, USGS Reston, VA	DELTA2H	NS	--	--	NS	--	--	NS	--	--	NS	--	--	NS	--	--	NS	--	--
CSIA EDB δ13C ‰) Kuder et al, 2012	EDB δ	NS	--	--	NS	--	--	NS	--	--	-19.2 ±1.5‰	--	--	NS	--	--	-18.0 ±1.5‰	--	--
VOCs (µg/L) EPA Method 8260	1,1,2-TRICHLOROETHANE	ND	U	0.5	ND	U	0.5	ND	U	10	ND	U	50	ND	U	0.5	ND	U	50
	1,2,4-TRIMETHYLBENZENE	230		20	230		20	260		20	310		100	290		100	260		100
	1,2-DIBROMOETHANE	78	J+	1	85	J+	1	85		20	ND	U	100	78	J+	1	73	J	100
	1,2-DICHLOROETHANE	ND	U	1	ND	U	1	ND	U	20	ND	U	100	3.5		1	ND	U	100
	1,3,5-TRIMETHYLBENZENE	86	J+	0.5	88	J+	0.5	89		10	110		50	92	J+	0.5	94	J	50
	2-BUTANONE	130	J+	10	130	J+	10	110	J	200	ND	U	1000	130	J+	10	ND	U	1000
	2-CHLOROTOLUENE	ND	U	0.5	ND	U	0.5	ND	U	10	ND	U	50	ND	U	0.5	ND	U	50
	2-HEXANONE	160	J+	5	160	J+	5	150	J	100	ND	U	500	140	J+	5	ND	U	500
	4-METHYL-2-PENTANONE	98	J+	5	99	J+	5	90	J	100	ND	U	500	94	J+	5	ND	U	500
	ACETONE	480	J+	10	490	J+	10	430		200	ND	U	1000	490	J+	10	ND	U	1000
	BENZENE	3300		20	3500		20	3600		20	4400		100	4200		100	4000		100
	CARBON DISULFIDE	ND	U	2	ND	U	2	ND	U	40	ND	U	200	ND	U	2	ND	U	200
	CHLOROMETHANE	ND	U	1	ND	U	1	ND	U	20	ND	U	100	ND	U	1	ND	U	100
	DICHLORODIFLUOROMETHANE	ND	U	1	ND	U	1	ND	U	20	ND	U	100	ND	U	1	ND	U	100
	ETHYLBENZENE	770		20	770		20	870		20	1000		100	1000		100	940		100
	ISOPROPYLBENZENE	70	J+	1	71	J+	1	74		20	94	J	100	78	J+	1	85	J	100
	METHYL TERT-BUTYL ETHER	ND	U	0.5	ND	U	0.5	ND	U	10	ND	U	50	ND	U	0.5	ND	U	50
	METHYLENE CHLORIDE	ND	U	5	ND	U	5	ND	U	100	ND	U	500	ND	U	5	ND	U	500
	NAPHTHALENE	120	J+	5	130	J+	5	120		100	ND	U	500	130	J+	5	ND	U	500
	N-BUTYLBENZENE	12	J+	1	13	J+	1	12	J	20	ND	U	100	14	J+	1	ND	U	100
	N-PROPYLBENZENE	69	J+	1	71	J+	1	75		20	93	J	100	78	J+	1	84	J	100
	P-ISOPROPYLTOLUENE	32	J+	1	33	J+	1	30		20	ND	U	100	38	J+	1	ND	U	100
	SEC-BUTYLBENZENE	13	J+	1	13	J+	1	13	J	20	ND	U	100	13	J+	1	ND	U	100
	TERT-BUTYLBENZENE	1.2	J+	1	1.1	J+	1	ND	U	20	ND	U	100	1	J+	1	ND	U	100
	TOLUENE	7600	J-	100	7100	J-	100	9100		100	9700		100	9400		100	8600		100
	TRICHLOROETHENE	ND	U	1	ND	U	1	ND	U	20	ND	U	100	ND	U	1	ND	U	100
	TRICHLOROFLUOROMETHANE	ND	U	1	ND	U	1	ND	U	20	ND	U	100	ND	U	1	ND	U	100
	XYLENES	2400		10	2400		10	2800		10	3300		50	3300		50	3000		50

Notes:

a. EPA analytical methods listed are for the most recent sampling event.

b. Samples were collected using Geotech Bladder Pumps.

c. Samples were recollected (except for QuantArray-Chlor analysis) using replacement QED Bladder Pumps.

-- = Not applicable.

δ2H - Delta Deuterium.

0/00 - Per mille.

cells/mL = Cells per milliliter.

EPA = Environmental Protection Agency.

FD = Field duplicate.

ID = Identification.

J = Estimated value, concentration is less than LOQ but greater than laboratory method detection limit (DL).

J+ = Estimated value, concentration is less than LOQ but greater than laboratory method detection limit (DL); biased high.

J- = Estimated value, concentration is less than LOQ but greater than laboratory method detection limit (DL); biased low.

KAFB = Kirtland Air Force Base.

LOQ = Limit of Quantitation

µg/L = Microgram per liter.

mg/L = Milligram per liter.

NA = Not analyzed.

ND = Not detected.

NS = Not sampled.

REG = Regular/parent sample.

U = Analyte was not detected. The reported numerical value is at or below the LOQ.

UJ = Analyte was not detected. The reported value is estimated.

VAL QUAL = Validation qualifier.

VFA - Volatile fatty acid.

VOC = Volatile organic compound.

Table 10
Groundwater Analytical Results for KAFB-106EX2

	Phase Designation	Phase 3 Passive						Phase 4 Passive		
	Sample ID	106EX2-P3P-100418			106EX2-P3P-111918			106EX2-P4P-012119		
	Sample Date	10/4/2018			11/19/2018			1/21/2019		
	Sample Pupose	REG			REG			REG		
Chemical Class and Analytical Method[a]	**Parameter**	**Result**	**Val Qual**	**LOQ**	**Result**	**Val Qual**	**LOQ**	**Result**	**Val Qual**	**LOQ**
Microbial Community (cells/mL) QuantArray-Chlor	1,1 DCA Reductase (DCA)	NS	--	--	ND	U	4.9	ND	U	5.1
	1,2 DCA Reductase (DCAR)	NS	--	--	ND	U	4.9	ND	U	5.1
	BAV1 Vinyl Chloride Reductase (BVC)	NS	--	--	ND	U	0.5	ND	U	0.5
	Chloroform Reductase (CFR)	NS	--	--	ND	U	4.9	ND	U	5.1
	Dehalobacter DCM (DCM)	NS	--	--	ND	U	4.9	ND	U	5.1
	Dehalobacter spp. (DHBt)	NS	--	--	84700		4.9	256000		5.1
	Dehalobium chlorocoercia (DECO)	NS	--	--	3390		4.9	11000		5.1
	Dehalococcoides (DHC)	NS	--	--	ND	U	0.5	0.8		0.5
	Dehalogenimonas spp. (DHG)	NS	--	--	ND	U	4.9	ND	U	5.1
	Desulfitobacterium spp. (DSB)	NS	--	--	40800		4.9	135000		5.1
	Desulfuromonas spp. (DSM)	NS	--	--	ND	U	4.9	ND	U	5.1
	Dichloromethane Dehalogenase (DCMA)	NS	--	--	ND	U	4.9	ND	U	5.1
	Epoxyalkane Transferase (EtnE)	NS	--	--	ND	U	4.9	111		5.1
	Ethene Monooxygenase (EtnC)	NS	--	--	ND	U	4.9	ND	U	5.1
	Methanogens (MGN)	NS	--	--	1390		4.9	4980		5.1
	PCE Reductase (PCE-1)	NS	--	--	ND	U	4.9	ND	U	5.1
	Phenol Hydroxylase (PHE)	NS	--	--	3150		4.9	12400		5.1
	PMMO	NS	--	--	NS	--	--	NS	--	--
	Soluble Methane Monooxygenase (SMMO)	NS	--	--	ND	U	4.9	ND	U	5.1
	Sulfate Reducing Bacteria (APS)	NS	--	--	163000		4.9	357000		5.1
	tceA Reductase (TCE)	NS	--	--	ND	U	0.5	ND	U	0.5
	Toluene Dioxygenase (TOD)	NS	--	--	ND	U	4.9	ND	U	5.1
	Toluene Monooxygenase (RMO)	NS	--	--	5160		4.9	14900		5.1
	Toluene Monooxygenase 2 (RDEG)	NS	--	--	5880		4.9	6660		5.1
	Total Eubacteria (EBAC)	NS	--	--	5520000		4.9	11100000		5.1
	trans-1,2-DCE Reductase (TDR)	NS	--	--	ND	U	4.9	ND	U	5.1
	Trichlorobenzene Dioxygenase (TCBO)	NS	--	--	ND	U	4.9	ND	U	5.1
	Vinyl Chloride Reductase (VCR)	NS	--	--	NS	--	--	ND	U	0.5
EDB (µg/L) EPA Method 8011	1,2-DIBROMOETHANE	65		0.15	55		0.29	62		18
Fluorometric (µg/L) Spectrofluorophotometry	FLUORESCEIN	NS	--	--	NS	--	--	NS	--	--
Reduced Gases (µg/L) RSKSOP-175	ACETYLENE	ND	U	10	ND	U	10	ND		10
	ETHANE	6.7		4	7.8		4	7.2		4
	ETHYLENE	13.1		5	12.6		5	10.4		5
	METHANE	398.5		2	168.3		2	128.3		2
	PROPANE	7.8		6	9.7		6	9.6		6
General Chemistry (mg/L) SM2320b, EPA Method 300, EPA Method 353.2, SM4500 PE	ALKALINITY	400		5	360		5	360		5
	BROMIDE	2		0.5	1.8		0.5	2		1
	CHLORIDE	96		0.5	120		5	140		1
	IODIDE	2.3		0.75	0.45	J	0.75	ND		0.75
	NITRATE	NS	--	--	NS	--	--	NS	--	--
	NITRITE	NS	--	--	NS	--	--	NS	--	--
	NITROGEN, NITRATE-NITRITE	ND	U	0.05	ND	U	0.05	ND		0.05
	O-PHOSPHATE (AS P)	ND	U	0.15	ND	UJ	0.75	ND		0.15
	SULFATE	20		1	26		1	22		2

Table 10
Groundwater Analytical Results for KAFB-106EX2

	Phase Designation	Phase 3 Passive						Phase 4 Passive		
	Sample ID	106EX2-P3P-100418			106EX2-P3P-111918			106EX2-P4P-012119		
	Sample Date	10/4/2018			11/19/2018			1/21/2019		
	Sample Pupose	REG			REG			REG		
Chemical Class and Analytical Method[a]	**Parameter**	**Result**	**Val Qual**	**LOQ**	**Result**	**Val Qual**	**LOQ**	**Result**	**Val Qual**	**LOQ**
VFAs (mg/L) EPA Method 300m	ACETIC ACID	30.8		10	ND	U	1	9.1		1
	BUTYRIC ACID	ND	U	1	ND	U	1	ND		1
	FORMIC ACID	ND	U	1	ND	U	1	ND		1
	LACTIC ACID	0.6	J	1	ND	U	1	0.5		1
	PROPIONIC ACID	ND	U	1	ND	U	1	ND		1
	PYRUVIC ACID	ND	U	1	ND	U	1	ND		1
	VALERIC ACID	ND	U	1	ND	U	1	ND		1
Dissolved Metals (mg/L) EPA Method 6010	IRON	3.7		0.05	4.2		0.05	4		0.05
	MANGANESE	5.8		0.003	5.9		0.003	5.2		0.003
δ2H (‰) Mass Spectrometry, USGS Reston, VA	DELTA2H	NS	--	--	NS	--	--	NS	--	--
CSIA EDB δ13C ‰) Kuder et al, 2012	EDB δ	NS	--	--	NS	--	--	NS	--	--
VOCs (µg/L) EPA Method 8260	1,1,2-TRICHLOROETHANE	ND	U	50	ND	U	13	ND		10
	1,2,4-TRIMETHYLBENZENE	340		100	250		25	250		20
	1,2-DIBROMOETHANE	ND	U	100	47		25	31		20
	1,2-DICHLOROETHANE	ND	U	100	ND	U	25	NA	--	--
	1,3,5-TRIMETHYLBENZENE	110		50	83		13	84		10
	2-BUTANONE	ND	U	1000	ND	U	250	ND		200
	2-CHLOROTOLUENE	ND	U	50	ND	U	13	ND		10
	2-HEXANONE	200	J	500	170	J	130	120		100
	4-METHYL-2-PENTANONE	ND	U	500	110	J	130	73		100
	ACETONE	ND	U	1000	190	J	250	190		200
	BENZENE	3800		100	3300		25	2300		20
	CARBON DISULFIDE	ND	U	200	ND	U	50	ND		40
	CHLOROMETHANE	ND	U	100	ND	U	25	ND		20
	DICHLORODIFLUOROMETHANE	ND	U	100	ND	U	25	NA	--	--
	ETHYLBENZENE	960		100	800		25	NA	--	--
	ISOPROPYLBENZENE	120		100	99		25	93		20
	METHYL TERT-BUTYL ETHER	ND	U	50	ND	U	13	ND		10
	METHYLENE CHLORIDE	ND	U	500	ND	U	130	ND		100
	NAPHTHALENE	280	J	500	120	J	130	110		100
	N-BUTYLBENZENE	ND	U	100	ND	U	25	12		20
	N-PROPYLBENZENE	97	J	100	72		25	70		20
	P-ISOPROPYLTOLUENE	57	J	100	44		25	38		20
	SEC-BUTYLBENZENE	ND	U	100	14	J	25	13		20
	TERT-BUTYLBENZENE	ND	U	100	ND	U	25	ND		20
	TOLUENE	8200		100	7000		50	4800		50
	TRICHLOROETHENE	ND	U	100	ND	U	25	ND		20
	TRICHLOROFLUOROMETHANE	ND	U	100	ND	U	25	ND		20
	XYLENES	3000		50	2600		13	2200		10

Notes:

a. EPA analytical methods listed are for the most recent sampling event.

b. Samples were collected using Geotech Bladder Pumps.

c. Samples were recollected (except for QuantArray-Chlor analysis) using replacement QED Bladder Pumps.

-- = Not applicable.

δ2H - Delta Deuterium.

0/00 - Per mille.

cells/mL = Cells per milliliter.

EPA = Environmental Protection Agency.

FD = Field duplicate.

ID = Identification.

J = Estimated value, concentration is less than LOQ but greater than laboratory method detection limit (DL).

J+ = Estimated value, concentration is less than LOQ but greater than laboratory method detection limit (DL); biased high.

J- = Estimated value, concentration is less than LOQ but greater than laboratory method detection limit (DL); biased low.

KAFB = Kirtland Air Force Base.

LOQ = Limit of Quantitation

µg/L = Microgram per liter.

mg/L = Milligram per liter.

NA = Not analyzed.

ND = Not detected.

NS = Not sampled.

REG = Regular/parent sample.

U = Analyte was not detected. The reported numerical value is at or below the LOQ.

UJ = Analyte was not detected. The reported value is estimated.

VAL QUAL = Validation qualifier.

VFA - Volatile fatty acid.

VOC = Volatile organic compound.

Table 11
Groundwater Analytical Results for KAFB-106IN1

	Phase Designation	Original Baseline[b]			New Baseline - QED Pumps[c]			Phase 1 Recirculation								
	Sample ID	106IN1-BL-062917			106IN1-BL-092617			106IN1-P1R-100217-1			106IN1-P1R-100217-2			106IN1-P1R-100317-3		
	Sample Date	6/29/2017			9/26/2017			10/2/2017			10/2/2017			10/3/2017		
	Sample Pupose	REG			REG			REG			REG			REG		
Chemical Class and Analytical Method[a]	Parameter	Result	Val Qual	LOQ	Result	Val Qual	LOQ	Result	Val Qual	LOQ	Result	Val Qual	LOQ	Result	Val Qual	LOQ
Microbial Community (cells/mL) QuantArray-Chlor	1,1 DCA Reductase (DCA)	ND	U	4.9	NS	--	--	NS	--	--	NS	--	--	NS	--	--
	1,2 DCA Reductase (DCAR)	ND	U	4.9	NS	--	--	NS	--	--	NS	--	--	NS	--	--
	BAV1 Vinyl Chloride Reductase (BVC)	ND	U	0.5	NS	--	--	NS	--	--	NS	--	--	NS	--	--
	Chloroform Reductase (CFR)	ND	U	4.9	NS	--	--	NS	--	--	NS	--	--	NS	--	--
	Dehalobacter DCM (DCM)	ND	U	4.9	NS	--	--	NS	--	--	NS	--	--	NS	--	--
	Dehalobacter spp. (DHBt)	155000		4.9	NS	--	--	NS	--	--	NS	--	--	NS	--	--
	Dehalobium chlorocoercia (DECO)	25700		4.9	NS	--	--	NS	--	--	NS	--	--	NS	--	--
	Dehalococcoides (DHC)	ND	U	0.5	NS	--	--	NS	--	--	NS	--	--	NS	--	--
	Dehalogenimonas spp. (DHG)	ND	U	4.9	NS	--	--	NS	--	--	NS	--	--	NS	--	--
	Desulfitobacterium spp. (DSB)	1370000		4.9	NS	--	--	NS	--	--	NS	--	--	NS	--	--
	Desulfuromonas spp. (DSM)	2	J	4.9	NS	--	--	NS	--	--	NS	--	--	NS	--	--
	Dichloromethane Dehalogenase (DCMA)	ND	U	4.9	NS	--	--	NS	--	--	NS	--	--	NS	--	--
	Epoxyalkane Transferase (EtnE)	1530		4.9	NS	--	--	NS	--	--	NS	--	--	NS	--	--
	Ethene Monooxygenase (EtnC)	ND	U	4.9	NS	--	--	NS	--	--	NS	--	--	NS	--	--
	Methanogens (MGN)	801		4.9	NS	--	--	NS	--	--	NS	--	--	NS	--	--
	PCE Reductase (PCE-1)	NS	--	--	NS	--	--	NS	--	--	NS	--	--	NS	--	--
	Phenol Hydroxylase (PHE)	204000		4.9	NS	--	--	NS	--	--	NS	--	--	NS	--	--
	PMMO	2830		4.9	NS	--	--	NS	--	--	NS	--	--	NS	--	--
	Soluble Methane Monooxygenase (SMMO)	10000		4.9	NS	--	--	NS	--	--	NS	--	--	NS	--	--
	Sulfate Reducing Bacteria (APS)	193000		4.9	NS	--	--	NS	--	--	NS	--	--	NS	--	--
	tceA Reductase (TCE)	ND	U	0.5	NS	--	--	NS	--	--	NS	--	--	NS	--	--
	Toluene Dioxygenase (TOD)	1370		4.9	NS	--	--	NS	--	--	NS	--	--	NS	--	--
	Toluene Monooxygenase (RMO)	393000		4.9	NS	--	--	NS	--	--	NS	--	--	NS	--	--
	Toluene Monooxygenase 2 (RDEG)	304000		4.9	NS	--	--	NS	--	--	NS	--	--	NS	--	--
	Total Eubacteria (EBAC)	2530000		4.9	NS	--	--	NS	--	--	NS	--	--	NS	--	--
	trans-1,2-DCE Reductase (TDR)	NS	--	--	NS	--	--	NS	--	--	NS	--	--	NS	--	--
	Trichlorobenzene Dioxygenase (TCBO)	484		4.9	NS	--	--	NS	--	--	NS	--	--	NS	--	--
	Vinyl Chloride Reductase (VCR)	ND	U	0.5	NS	--	--	NS	--	--	NS	--	--	NS	--	--
EDB (µg/L) EPA Method 8011	1,2-DIBROMOETHANE	47.4		1.88	20.1	J+	1.92	NS	--	--	NS	--	--	NS	--	--
Fluorometric (µg/L) Spectrofluorophotometry	FLUORESCEIN	ND	U	0.01	ND	U	0.01	566.7		0.01	540.1		0.01	592.2		0.01
Reduced Gases (µg/L) RSKSOP-175	ACETYLENE	ND	U	10	ND	U	10	NS	--	--	NS	--	--	NS	--	--
	ETHANE	1.27	J	4	0.94	J	4	NS	--	--	NS	--	--	NS	--	--
	ETHYLENE	2.3	J	5	4.36	J	5	NS	--	--	NS	--	--	NS	--	--
	METHANE	2.15		2	1.49	J	2	NS	--	--	NS	--	--	NS	--	--
	PROPANE	2.01	J	6	1.52	J	6	NS	--	--	NS	--	--	NS	--	--
General Chemistry (mg/L) SM2320b, EPA Method 300, EPA Method 353.2, SM4500 PE	ALKALINITY	261		1	299		1	NS	--	--	NS	--	--	NS	--	--
	BROMIDE	0.621	J-	0.125	0.515		0.25	NS	--	--	NS	--	--	NS	--	--
	CHLORIDE	48.6		0.66	45.3		0.66	NS	--	--	NS	--	--	NS	--	--
	IODIDE	ND	U	0.2	ND	U	0.75	NS	--	--	NS	--	--	NS	--	--
	NITRATE	NS	--	--	NS	--	--	NS	--	--	NS	--	--	NS	--	--
	NITRITE	NS	--	--	NS	--	--	NS	--	--	NS	--	--	NS	--	--
	NITROGEN, NITRATE-NITRITE	ND	U	0.375	ND	U	0.375	NS	--	--	NS	--	--	NS	--	--
	O-PHOSPHATE (AS P)	0.0425		0.02	0.209	J+	0.02	NS	--	--	NS	--	--	NS	--	--
	SULFATE	3.03	J	2	ND	U	2	NS	--	--	NS	--	--	NS	--	--

Table 11
Groundwater Analytical Results for KAFB-106IN1

	Phase Designation	Original Baseline[b]			New Baseline - QED Pumps[c]			Phase 1 Recirculation								
	Sample ID	106IN1-BL-062917			106IN1-BL-092617			106IN1-P1R-100217-1			106IN1-P1R-100217-2			106IN1-P1R-100317-3		
	Sample Date	6/29/2017			9/26/2017			10/2/2017			10/2/2017			10/3/2017		
	Sample Pupose	REG			REG			REG			REG			REG		
Chemical Class and Analytical Method[a]	Parameter	Result	Val Qual	LOQ	Result	Val Qual	LOQ	Result	Val Qual	LOQ	Result	Val Qual	LOQ	Result	Val Qual	LOQ
VFAs (mg/L) EPA Method 300m	ACETIC ACID	ND	U	1	1.17		1	NS	--	--	NS	--	--	NS	--	--
	BUTYRIC ACID	ND	U	1	ND	U	1	NS	--	--	NS	--	--	NS	--	--
	FORMIC ACID	ND	U	1	ND	U	1	NS	--	--	NS	--	--	NS	--	--
	LACTIC ACID	ND	U	1	ND	U	1	NS	--	--	NS	--	--	NS	--	--
	PROPIONIC ACID	ND	U	1	ND	U	1	NS	--	--	NS	--	--	NS	--	--
	PYRUVIC ACID	ND	U	1	ND	U	1	NS	--	--	NS	--	--	NS	--	--
	VALERIC ACID	ND	U	1	ND	U	1	NS	--	--	NS	--	--	NS	--	--
Dissolved Metals (mg/L) EPA Method 6010	IRON	4.81		0.06	13.8		0.06	NS	--	--	NS	--	--	NS	--	--
	MANGANESE	3.27		0.006	3.31		0.006	NS	--	--	NS	--	--	NS	--	--
δ2H (‰) Mass Spectrometry, USGS Reston, VA	DELTA2H	-92.97		-99	-93.85		-99	576.52		-99	608.76		-99	588.99		-99
CSIA EDB δ13C ‰) Kuder et al, 2012	EDB δ	NA	--	--	-5.0 ±2‰	--	--	NS	--	--	NS	--	--	NS	--	--
VOCs (µg/L) EPA Method 8260	1,1,2-TRICHLOROETHANE	ND	U	10	ND	U	12.5	NS	--	--	NS	--	--	NS	--	--
	1,2,4-TRIMETHYLBENZENE	183		10	193		12.5	NS	--	--	NS	--	--	NS	--	--
	1,2-DIBROMOETHANE	75		10	28.6		12.5	NS	--	--	NS	--	--	NS	--	--
	1,2-DICHLOROETHANE	ND	U	10	6.76	J	12.5	NS	--	--	NS	--	--	NS	--	--
	1,3,5-TRIMETHYLBENZENE	63.6		10	62.8		12.5	NS	--	--	NS	--	--	NS	--	--
	2-BUTANONE	1570		100	163	J	125	NS	--	--	NS	--	--	NS	--	--
	2-CHLOROTOLUENE	ND	U	10	ND	U	12.5	NS	--	--	NS	--	--	NS	--	--
	2-HEXANONE	220		50	136		62.5	NS	--	--	NS	--	--	NS	--	--
	4-METHYL-2-PENTANONE	82.4	J	50	98.3	J	62.5	NS	--	--	NS	--	--	NS	--	--
	ACETONE	1780		100	667		125	NS	--	--	NS	--	--	NS	--	--
	BENZENE	1930		10	1930		12.5	NS	--	--	NS	--	--	NS	--	--
	CARBON DISULFIDE	ND	U	10	7.23	J	12.5	NS	--	--	NS	--	--	NS	--	--
	CHLOROMETHANE	ND	U	10	ND	U	12.5	NS	--	--	NS	--	--	NS	--	--
	DICHLORODIFLUOROMETHANE	ND	U	20	ND	U	25	NS	--	--	NS	--	--	NS	--	--
	ETHYLBENZENE	396		10	696		12.5	NS	--	--	NS	--	--	NS	--	--
	ISOPROPYLBENZENE	31.3		10	49.5		12.5	NS	--	--	NS	--	--	NS	--	--
	METHYL TERT-BUTYL ETHER	ND	U	10	ND	U	12.5	NS	--	--	NS	--	--	NS	--	--
	METHYLENE CHLORIDE	ND	U	20	ND	U	25	NS	--	--	NS	--	--	NS	--	--
	NAPHTHALENE	46		10	80		12.5	NS	--	--	NS	--	--	NS	--	--
	N-BUTYLBENZENE	8.21	J	10	8.26	J	12.5	NS	--	--	NS	--	--	NS	--	--
	N-PROPYLBENZENE	29.3		10	45.5		12.5	NS	--	--	NS	--	--	NS	--	--
	P-ISOPROPYLTOLUENE	6.71	J	10	7.24	J	12.5	NS	--	--	NS	--	--	NS	--	--
	SEC-BUTYLBENZENE	ND	U	10	8.72	J	12.5	NS	--	--	NS	--	--	NS	--	--
	TERT-BUTYLBENZENE	ND	U	10	ND	U	12.5	NS	--	--	NS	--	--	NS	--	--
	TOLUENE	3680		10	2730		12.5	NS	--	--	NS	--	--	NS	--	--
	TRICHLOROETHENE	ND	U	10	ND	U	12.5	NS	--	--	NS	--	--	NS	--	--
	TRICHLOROFLUOROMETHANE	ND	U	20	ND	U	25	NS	--	--	NS	--	--	NS	--	--
	XYLENES	1720		30	1640		37.5	NS	--	--	NS	--	--	NS	--	--

Notes:

a. EPA analytical methods listed are for the most recent sampling event.

b. Samples were collected using Geotech Bladder Pumps.

c. Samples were recollected (except for QuantArray-Chlor analysis) using replacement QED Bladder Pumps.

d. Sample was noted collected due to instantaneous drawdown in water level.

e. Sample was collected using a stainless steel bailer.

-- = Not applicable.

δ2H - Delta Deuterium.

0/00 - Per mille.

cells/mL = Cells per milliliter.

EPA = Environmental Protection Agency.

FD = Field duplicate.

ID = Identification.

J = Estimated value, concentration is less than LOQ but greater than laboratory method detection limit (DL).

J+ = Estimated value, concentration is less than LOQ but greater than laboratory method detection limit (DL); biased high.

J- = Estimated value, concentration is less than LOQ but greater than laboratory method detection limit (DL); biased low.

KAFB = Kirtland Air Force Base.

LOQ = Limit of Quantitation

µg/L = Microgram per liter.

mg/L = Milligram per liter.

NA = Not analyzed.

ND = Not detected.

NS = Not sampled.

REG = Regular/parent sample.

U = Analyte was not detected. The reported numerical value is at or below the LOQ.

UJ = Analyte was not detected. The reported value is estimated.

VAL QUAL = Validation qualifier.

VFA - Volatile fatty acid.

VOC = Volatile organic compound.

Table 11
Groundwater Analytical Results for KAFB-106IN1

	Phase Designation	Phase 1 Passive									Phase 2 Recirculation						Phase 2 Recirculation					
	Sample ID	106IN1-P1P-111617			106IN1-P1P-111617-FD			106IN1-P1P-112917			106IN1-P2R-010218-01			106IN1-P2R-010218-02			106IN1-P2R-011018-03			106IN1-P2R-012418-04		
	Sample Date	11/16/2017			11/16/2017			11/29/2017			1/2/2018			1/2/2018			1/10/2018			1/24/2018		
	Sample Pupose	REG			FD			REG			REG			REG			REG			REG		
Chemical Class and Analytical Method[a]	Parameter	Result	Val Qual	LOQ	Result	Val Qual	LOQ	Result	Val Qual	LOQ	Result	Val Qual	LOQ	Result	Val Qual	LOQ	Result	Val Qual	LOQ	Result	Val Qual	LOQ
Microbial Community (cells/mL) QuantArray-Chlor	1,1 DCA Reductase (DCA)	NS	--	--	NS	--	--	ND	U	7.1	NS	--	--	NS	--	--	NS	--	--	NS	--	--
	1,2 DCA Reductase (DCAR)	NS	--	--	NS	--	--	ND	U	7.1	NS	--	--	NS	--	--	NS	--	--	NS	--	--
	BAV1 Vinyl Chloride Reductase (BVC)	NS	--	--	NS	--	--	ND	U	0.7	NS	--	--	NS	--	--	NS	--	--	NS	--	--
	Chloroform Reductase (CFR)	NS	--	--	NS	--	--	ND	U	7.1	NS	--	--	NS	--	--	NS	--	--	NS	--	--
	Dehalobacter DCM (DCM)	NS	--	--	NS	--	--	ND	U	7.1	NS	--	--	NS	--	--	NS	--	--	NS	--	--
	Dehalobacter spp. (DHBt)	NS	--	--	NS	--	--	45900		7.1	NS	--	--	NS	--	--	NS	--	--	NS	--	--
	Dehalobium chlorocoercia (DECO)	NS	--	--	NS	--	--	7550		7.1	NS	--	--	NS	--	--	NS	--	--	NS	--	--
	Dehalococcoides (DHC)	NS	--	--	NS	--	--	0.9		0.7	NS	--	--	NS	--	--	NS	--	--	NS	--	--
	Dehalogenimonas spp. (DHG)	NS	--	--	NS	--	--	ND	U	7.1	NS	--	--	NS	--	--	NS	--	--	NS	--	--
	Desulfitobacterium spp. (DSB)	NS	--	--	NS	--	--	84000		7.1	NS	--	--	NS	--	--	NS	--	--	NS	--	--
	Desulfuromonas spp. (DSM)	NS	--	--	NS	--	--	ND	U	7.1	NS	--	--	NS	--	--	NS	--	--	NS	--	--
	Dichloromethane Dehalogenase (DCMA)	NS	--	--	NS	--	--	ND	U	7.1	NS	--	--	NS	--	--	NS	--	--	NS	--	--
	Epoxyalkane Transferase (EtnE)	NS	--	--	NS	--	--	ND	U	7.1	NS	--	--	NS	--	--	NS	--	--	NS	--	--
	Ethene Monooxygenase (EtnC)	NS	--	--	NS	--	--	ND	U	7.1	NS	--	--	NS	--	--	NS	--	--	NS	--	--
	Methanogens (MGN)	NS	--	--	NS	--	--	254		7.1	NS	--	--	NS	--	--	NS	--	--	NS	--	--
	PCE Reductase (PCE-1)	NS	--	--	NS	--	--	NS	--	--	NS	--	--	NS	--	--	NS	--	--	NS	--	--
	Phenol Hydroxylase (PHE)	NS	--	--	NS	--	--	6530		7.1	NS	--	--	NS	--	--	NS	--	--	NS	--	--
	PMMO	NS	--	--	NS	--	--	0.3	J	7.1	NS	--	--	NS	--	--	NS	--	--	NS	--	--
	Soluble Methane Monooxygenase (SMMO)	NS	--	--	NS	--	--	ND	U	7.1	NS	--	--	NS	--	--	NS	--	--	NS	--	--
	Sulfate Reducing Bacteria (APS)	NS	--	--	NS	--	--	65400		7.1	NS	--	--	NS	--	--	NS	--	--	NS	--	--
	tceA Reductase (TCE)	NS	--	--	NS	--	--	1.4		0.7	NS	--	--	NS	--	--	NS	--	--	NS	--	--
	Toluene Dioxygenase (TOD)	NS	--	--	NS	--	--	3500		7.1	NS	--	--	NS	--	--	NS	--	--	NS	--	--
	Toluene Monooxygenase (RMO)	NS	--	--	NS	--	--	57400		7.1	NS	--	--	NS	--	--	NS	--	--	NS	--	--
	Toluene Monooxygenase 2 (RDEG)	NS	--	--	NS	--	--	31700		7.1	NS	--	--	NS	--	--	NS	--	--	NS	--	--
	Total Eubacteria (EBAC)	NS	--	--	NS	--	--	9460000		7.1	NS	--	--	NS	--	--	NS	--	--	NS	--	--
	trans-1,2-DCE Reductase (TDR)	NS	--	--	NS	--	--	NS	--	--	NS	--	--	NS	--	--	NS	--	--	NS	--	--
	Trichlorobenzene Dioxygenase (TCBO)	NS	--	--	NS	--	--	ND	U	7.1	NS	--	--	NS	--	--	NS	--	--	NS	--	--
	Vinyl Chloride Reductase (VCR)	NS	--	--	NS	--	--	2.3		0.7	NS	--	--	NS	--	--	NS	--	--	NS	--	--
EDB (µg/L) EPA Method 8011	1,2-DIBROMOETHANE	19.9		3.8	22.1		3.88	23.8		1.94	NS	--	--	NS	--	--	NS	--	--	NS	--	--
Fluorometric (µg/L) Spectrofluorophotometry	FLUORESCEIN	3.338		0.01	NS	--	--	3.197		0.01	NS	--	--	NS	--	--	NS	--	--	NS	--	--
Reduced Gases (µg/L) RSKSOP-175	ACETYLENE	ND	U	10	ND	U	10	ND	U	10	NS	--	--	NS	--	--	NS	--	--	NS	--	--
	ETHANE	ND	U	4	ND	U	4	1.54	J	4	NS	--	--	NS	--	--	NS	--	--	NS	--	--
	ETHYLENE	4.04	J	5	4.03	J	5	6.02		5	NS	--	--	NS	--	--	NS	--	--	NS	--	--
	METHANE	18		2	17.3		2	354		2	NS	--	--	NS	--	--	NS	--	--	NS	--	--
	PROPANE	ND	U	6	ND	U	6	ND	U	6	NS	--	--	NS	--	--	NS	--	--	NS	--	--
General Chemistry (mg/L) SM2320b, EPA Method 300, EPA Method 353.2, SM4500 PE	ALKALINITY	314		1	289		1	298		1	NS	--	--	NS	--	--	NS	--	--	NS	--	--
	BROMIDE	0.676		0.25	0.683		0.25	0.78		0.25	NS	--	--	NS	--	--	NS	--	--	NS	--	--
	CHLORIDE	48.8		0.66	49		0.66	55.6		0.66	NS	--	--	NS	--	--	NS	--	--	NS	--	--
	IODIDE	ND	U	0.75	ND	U	0.75	ND	U	0.75	18		0.75	18		0.75	18		0.75	26		1.5
	NITRATE	NS	--	--	NS	--	--	NS	--	--	NS	--	--	NS	--	--	NS	--	--	NS	--	--
	NITRITE	NS	--	--	NS	--	--	NS	--	--	NS	--	--	NS	--	--	NS	--	--	NS	--	--
	NITROGEN, NITRATE-NITRITE	ND	U	0.375	ND	U	0.375	ND	U	0.375	NS	--	--	NS	--	--	NS	--	--	NS	--	--
	O-PHOSPHATE (AS P)	0.0245	J	0.02	0.0171	J	0.02	0.109		0.02	NS	--	--	NS	--	--	NS	--	--	9.74		1
	SULFATE	ND	U	2	ND	U	2	ND	U	2	NS	--	--	NS	--	--	NS	--	--	NS	--	--

Table 11
Groundwater Analytical Results for KAFB-106IN1

	Phase Designation	Phase 1 Passive									Phase 2 Recirculation						Phase 2 Recirculation					
	Sample ID	106IN1-P1P-111617			106IN1-P1P-111617-FD			106IN1-P1P-112917			106IN1-P2R-010218-01			106IN1-P2R-010218-02			106IN1-P2R-011018-03			106IN1-P2R-012418-04		
	Sample Date	11/16/2017			11/16/2017			11/29/2017			1/2/2018			1/2/2018			1/10/2018			1/24/2018		
	Sample Pupose	REG			FD			REG			REG			REG			REG			REG		
Chemical Class and Analytical Method[a]	Parameter	Result	Val Qual	LOQ	Result	Val Qual	LOQ	Result	Val Qual	LOQ	Result	Val Qual	LOQ	Result	Val Qual	LOQ	Result	Val Qual	LOQ	Result	Val Qual	LOQ
VFAs (mg/L) EPA Method 300m	ACETIC ACID	108		1	114		1	102		1	NS	--	--	ND	U	1	ND	U	1	26.3		1
	BUTYRIC ACID	9.2		1	10.1		1	4.78		1	NS	--	--	ND	U	1	ND	U	1	ND	U	1
	FORMIC ACID	ND	U	1	ND	U	1	ND	U	1	NS	--	--	ND	U	1	ND	U	1	ND	U	1
	LACTIC ACID	ND	U	1	ND	U	1	ND	U	1	NS	--	--	140		20	144	J	10	154	J	1
	PROPIONIC ACID	21.9		1	22.7		1	19.3		1	NS	--	--	ND	U	1	ND	U	1	ND	U	1
	PYRUVIC ACID	ND	U	1	ND	U	1	ND	U	1	NS	--	--	ND	U	1	ND	U	1	ND	U	1
	VALERIC ACID	4.34		1	4.03		1	3.88		1	NS	--	--	ND	U	1	ND	U	1	ND	U	1
Dissolved Metals (mg/L) EPA Method 6010	IRON	25.5		0.06	24.8		0.06	23.2		0.06	NS	--	--	NS	--	--	NS	--	--	NS	--	--
	MANGANESE	3.09		0.006	3.06		0.006	3.08		0.006	NS	--	--	NS	--	--	NS	--	--	NS	--	--
δ2H (‰) Mass Spectrometry, USGS Reston, VA	DELTA2H	-88.51		-99	-87.39		-99	-87.49		-99	NS	--	--	NS	--	--	NS	--	--	NS	--	--
CSIA EDB δ13C ‰) Kuder et al, 2012	EDB δ	NS	--	--	NS	--	--	-7.7±2‰	--	--	NS	--	--	NS	--	--	NS	--	--	NS	--	--
VOCs (µg/L) EPA Method 8260	1,1,2-TRICHLOROETHANE	ND	U	50	ND	U	50	ND	U	25	NS	--	--	NS	--	--	NS	--	--	NS	--	--
	1,2,4-TRIMETHYLBENZENE	194		50	170		50	172		25	NS	--	--	NS	--	--	NS	--	--	NS	--	--
	1,2-DIBROMOETHANE	26.5	J	50	26.4	J	50	29.6	J	25	NS	--	--	NS	--	--	NS	--	--	NS	--	--
	1,2-DICHLOROETHANE	ND	U	50	ND	U	50	ND	U	25	NS	--	--	NS	--	--	NS	--	--	NS	--	--
	1,3,5-TRIMETHYLBENZENE	68.7	J	50	58.3	J	50	63.6		25	NS	--	--	NS	--	--	NS	--	--	NS	--	--
	2-BUTANONE	ND	U	500	ND	U	500	127	J	250	NS	--	--	NS	--	--	NS	--	--	NS	--	--
	2-CHLOROTOLUENE	ND	U	50	ND	U	50	ND	U	25	NS	--	--	NS	--	--	NS	--	--	NS	--	--
	2-HEXANONE	ND	U	250	ND	U	250	139	J	125	NS	--	--	NS	--	--	NS	--	--	NS	--	--
	4-METHYL-2-PENTANONE	ND	U	250	ND	U	250	102	J	125	NS	--	--	NS	--	--	NS	--	--	NS	--	--
	ACETONE	466	J-	500	451	J-	500	469	J	250	NS	--	--	NS	--	--	NS	--	--	NS	--	--
	BENZENE	2950		50	2590		50	2970		25	NS	--	--	NS	--	--	NS	--	--	NS	--	--
	CARBON DISULFIDE	ND	U	50	ND	U	50	ND	U	25	NS	--	--	NS	--	--	NS	--	--	NS	--	--
	CHLOROMETHANE	ND	U	50	ND	U	50	ND	U	25	NS	--	--	NS	--	--	NS	--	--	NS	--	--
	DICHLORODIFLUOROMETHANE	ND	U	100	ND	U	100	ND	U	50	NS	--	--	NS	--	--	NS	--	--	NS	--	--
	ETHYLBENZENE	576		50	483		50	601		25	NS	--	--	NS	--	--	NS	--	--	NS	--	--
	ISOPROPYLBENZENE	57.5	J	50	49.6	J	50	70.2		25	NS	--	--	NS	--	--	NS	--	--	NS	--	--
	METHYL TERT-BUTYL ETHER	ND	U	50	ND	U	50	ND	U	25	NS	--	--	NS	--	--	NS	--	--	NS	--	--
	METHYLENE CHLORIDE	ND	U	100	ND	U	100	ND	U	50	NS	--	--	NS	--	--	NS	--	--	NS	--	--
	NAPHTHALENE	73.6	J	50	77	J	50	81.9		25	NS	--	--	NS	--	--	NS	--	--	NS	--	--
	N-BUTYLBENZENE	ND	U	50	ND	U	50	ND	U	25	NS	--	--	NS	--	--	NS	--	--	NS	--	--
	N-PROPYLBENZENE	45.6	J	50	39.3	J	50	53.4		25	NS	--	--	NS	--	--	NS	--	--	NS	--	--
	P-ISOPROPYLTOLUENE	ND	U	50	ND	U	50	33.7	J	25	NS	--	--	NS	--	--	NS	--	--	NS	--	--
	SEC-BUTYLBENZENE	ND	U	50	ND	U	50	ND	U	25	NS	--	--	NS	--	--	NS	--	--	NS	--	--
	TERT-BUTYLBENZENE	ND	U	50	ND	U	50	ND	U	25	NS	--	--	NS	--	--	NS	--	--	NS	--	--
	TOLUENE	6210		50	5140		50	5540		25	NS	--	--	NS	--	--	NS	--	--	NS	--	--
	TRICHLOROETHENE	ND	U	50	ND	U	50	ND	U	25	NS	--	--	NS	--	--	NS	--	--	NS	--	--
	TRICHLOROFLUOROMETHANE	ND	U	100	ND	U	100	ND	U	50	NS	--	--	NS	--	--	NS	--	--	NS	--	--
	XYLENES	1790		150	1520		150	1930		75	NS	--	--	NS	--	--	NS	--	--	NS	--	--

Notes:

a. EPA analytical methods listed are for the most recent sampling event.

b. Samples were collected using Geotech Bladder Pumps.

c. Samples were recollected (except for QuantArray-Chlor analysis) using replacement QED Bladder Pumps.

d. Sample was noted collected due to instantaneous drawdown in water level.

e. Sample was collected using a stainless steel bailer.

-- = Not applicable.

δ2H - Delta Deuterium.

0/00 - Per mille.

cells/mL = Cells per milliliter.

EPA = Environmental Protection Agency.

FD = Field duplicate.

ID = Identification.

J = Estimated value, concentration is less than LOQ but greater than laboratory method detection limit (DL).

J+ = Estimated value, concentration is less than LOQ but greater than laboratory method detection limit (DL); biased high.

J- = Estimated value, concentration is less than LOQ but greater than laboratory method detection limit (DL); biased low.

KAFB = Kirtland Air Force Base.

LOQ = Limit of Quantitation

µg/L = Microgram per liter.

mg/L = Milligram per liter.

NA = Not analyzed.

ND = Not detected.

NS = Not sampled.

REG = Regular/parent sample.

U = Analyte was not detected. The reported numerical value is at or below the LOQ.

UJ = Analyte was not detected. The reported value is estimated.

VAL QUAL = Validation qualifier.

VFA - Volatile fatty acid.

VOC = Volatile organic compound.

Table 11
Groundwater Analytical Results for KAFB-106IN1

	Phase Designation	Phase 2 Passive									Phase 2 Passive		
	Sample ID	106IN1-P2P-030718			106IN1-P2P-041118			106IN1-P2P-050918			106IN1-P2P-061418		
	Sample Date	3/7/2018			4/11/2018			5/9/2018			6/14/2018		
	Sample Pupose	REG			REG			REG			REG		
Chemical Class and Analytical Method[a]	Parameter	Result	Val Qual	LOQ	Result	Val Qual	LOQ	Result	Val Qual	LOQ	Result	Val Qual	LOQ
Microbial Community (cells/mL) QuantArray-Chlor	1,1 DCA Reductase (DCA)	NS	--	--	NS	--	--	ND	U	62.5	NS	--	--
	1,2 DCA Reductase (DCAR)	NS	--	--	NS	--	--	ND	U	62.5	NS	--	--
	BAV1 Vinyl Chloride Reductase (BVC)	NS	--	--	NS	--	--	ND	U	6.3	NS	--	--
	Chloroform Reductase (CFR)	NS	--	--	NS	--	--	ND	U	62.5	NS	--	--
	Dehalobacter DCM (DCM)	NS	--	--	NS	--	--	37500		62.5	NS	--	--
	Dehalobacter spp. (DHBt)	NS	--	--	NS	--	--	1380000		62.5	NS	--	--
	Dehalobium chlorocoercia (DECO)	NS	--	--	NS	--	--	478000		62.5	NS	--	--
	Dehalococcoides (DHC)	NS	--	--	NS	--	--	ND	U	6.3	NS	--	--
	Dehalogenimonas spp. (DHG)	NS	--	--	NS	--	--	12800		62.5	NS	--	--
	Desulfitobacterium spp. (DSB)	NS	--	--	NS	--	--	392000		62.5	NS	--	--
	Desulfuromonas spp. (DSM)	NS	--	--	NS	--	--	ND	U	62.5	NS	--	--
	Dichloromethane Dehalogenase (DCMA)	NS	--	--	NS	--	--	ND	U	62.5	NS	--	--
	Epoxyalkane Transferase (EtnE)	NS	--	--	NS	--	--	ND	U	62.5	NS	--	--
	Ethene Monooxygenase (EtnC)	NS	--	--	NS	--	--	ND	U	62.5	NS	--	--
	Methanogens (MGN)	NS	--	--	NS	--	--	265000		62.5	NS	--	--
	PCE Reductase (PCE-1)	NS	--	--	NS	--	--	ND	U	62.5	NS	--	--
	Phenol Hydroxylase (PHE)	NS	--	--	NS	--	--	82700		62.5	NS	--	--
	PMMO	NS	--	--	NS	--	--	NS	--	--	NS	--	--
	Soluble Methane Monooxygenase (SMMO)	NS	--	--	NS	--	--	ND	U	62.5	NS	--	--
	Sulfate Reducing Bacteria (APS)	NS	--	--	NS	--	--	1750000		62.5	NS	--	--
	tceA Reductase (TCE)	NS	--	--	NS	--	--	ND	U	6.3	NS	--	--
	Toluene Dioxygenase (TOD)	NS	--	--	NS	--	--	ND	U	62.5	NS	--	--
	Toluene Monooxygenase (RMO)	NS	--	--	NS	--	--	78900		62.5	NS	--	--
	Toluene Monooxygenase 2 (RDEG)	NS	--	--	NS	--	--	58000		62.5	NS	--	--
	Total Eubacteria (EBAC)	NS	--	--	NS	--	--	157000000		62.5	NS	--	--
	trans-1,2-DCE Reductase (TDR)	NS	--	--	NS	--	--	ND	U	62.5	NS	--	--
	Trichlorobenzene Dioxygenase (TCBO)	NS	--	--	NS	--	--	ND	U	62.5	NS	--	--
	Vinyl Chloride Reductase (VCR)	NS	--	--	NS	--	--	ND	U		NS	--	--
EDB (µg/L) EPA Method 8011	1,2-DIBROMOETHANE	0.129		0.0193	ND	U	0.0194	ND	U	0.019	ND	U	0.0192
Fluorometric (µg/L) Spectrofluorophotometry	FLUORESCEIN	NS	--	--	NS	--	--	NS	--	--	NS	--	--
Reduced Gases (µg/L) RSKSOP-175	ACETYLENE	ND	U	10	ND	U	10	ND	U	10	ND	UJ	10
	ETHANE	1.9	J	4	0.66	J	4	0.65	J	4	1	J	4
	ETHYLENE	5		5	2.5		5	1.73	J	5	2.5	J	5
	METHANE	8200		20	12400		20	10800		20	15300	J	20
	PROPANE	2.4	J	6	0.92	J	6	0.97	J	6	1.1	J	6
General Chemistry (mg/L) SM2320b, EPA Method 300, EPA Method 353.2, SM4500 PE	ALKALINITY	578		1	668		1	787		1	762	J-	1
	BROMIDE	0.55	J	1.25	0.578	J	0.625	0.77		0.25	ND	U	1.25
	CHLORIDE	45.6		3.3	61.5		1.65	77.5		0.66	77.9		3.3
	IODIDE	8.6		0.75	4.5		0.75	3.3		0.75	3.9		0.75
	NITRATE	NS	--	--	ND	U	0.5	ND	U	0.2	ND	U	1
	NITRITE	NS	--	--	ND	U	0.5	ND	U	0.2	ND	U	1
	NITROGEN, NITRATE-NITRITE	ND	U	0.375	NS	--	--	NS	--	--	NS	--	--
	O-PHOSPHATE (AS P)	10.8		0.5	8.66		0.2	6.64		0.2	0.624		0.02
	SULFATE	ND	U	10	ND	U	5	ND	U	2	ND	U	10

Table 11
Groundwater Analytical Results for KAFB-106IN1

	Phase Designation	Phase 2 Passive									Phase 2 Passive		
	Sample ID	106IN1-P2P-030718			106IN1-P2P-041118			106IN1-P2P-050918			106IN1-P2P-061418		
	Sample Date	3/7/2018			4/11/2018			5/9/2018			6/14/2018		
	Sample Pupose	REG			REG			REG			REG		
Chemical Class and Analytical Method[a]	Parameter	Result	Val Qual	LOQ	Result	Val Qual	LOQ	Result	Val Qual	LOQ	Result	Val Qual	LOQ
VFAs (mg/L) EPA Method 300m	ACETIC ACID	312		10	55.1		20	20.7		3	11.4	J	10
	BUTYRIC ACID	34.7		1	ND	U	1	ND	U	3	ND	UJ	10
	FORMIC ACID	14.7		1	ND	U	1	ND	U	3	ND	UJ	10
	LACTIC ACID	ND	U	1	ND	U	1	2.48	J	3	ND	UJ	10
	PROPIONIC ACID	170		10	121		20	89.3		10	8.7	J	10
	PYRUVIC ACID	47		1	11.2	J	20	ND	U	3	ND	UJ	10
	VALERIC ACID	9.1		1	2.9		1	ND	U	3	ND	UJ	10
Dissolved Metals (mg/L) EPA Method 6010	IRON	18.7		0.06	20.2	J-	0.06	26.4		0.06	25.3		0.06
	MANGANESE	6.4		0.006	5.37	J+	0.006	5.57		0.006	5.54		0.006
δ2H (‰) Mass Spectrometry, USGS Reston, VA	DELTA2H	NS	--	--	NS	--	--	NS	--	--	NS	--	--
CSIA EDB δ13C ‰) Kuder et al, 2012	EDB δ	NS	--	--	NS	--	--	NA	--	--	NS	--	--
VOCs (µg/L) EPA Method 8260	1,1,2-TRICHLOROETHANE	ND	U	50	ND	U	2.5	ND	U	50	ND	U	25
	1,2,4-TRIMETHYLBENZENE	271		50	286		2.5	309		50	261		25
	1,2-DIBROMOETHANE	ND	U	50	ND	U	2.5	ND	U	50	ND	U	25
	1,2-DICHLOROETHANE	ND	U	50	2.57	J	2.5	ND	U	50	ND	U	25
	1,3,5-TRIMETHYLBENZENE	104		50	106		2.5	110		50	89.2		25
	2-BUTANONE	ND	U	500	128		25	ND	U	500	ND	U	250
	2-CHLOROTOLUENE	ND	U	50	ND	U	2.5	ND	U	50	ND	U	25
	2-HEXANONE	ND	U	250	145		12.5	ND	U	250	63.4	J	125
	4-METHYL-2-PENTANONE	147	J	250	181		12.5	157	J	250	172	J	125
	ACETONE	459	J	500	332		25	ND	U	500	132	J	250
	BENZENE	3660		50	2880		25	2990		50	3190		25
	CARBON DISULFIDE	ND	U	50	ND	U	2.5	ND	U	50	ND	U	25
	CHLOROMETHANE	ND	U	50	ND	U	2.5	ND	U	50	ND	U	25
	DICHLORODIFLUOROMETHANE	ND	U	100	ND	U	5	ND	U	100	ND	U	50
	ETHYLBENZENE	1750		50	976		2.5	1270		50	999		25
	ISOPROPYLBENZENE	147		50	194		2.5	238		50	216		25
	METHYL TERT-BUTYL ETHER	ND	U	50	ND	U	2.5	ND	U	50	ND	U	25
	METHYLENE CHLORIDE	ND	U	100	ND	U	5	ND	U	100	ND	U	50
	NAPHTHALENE	67.4	J	50	132		2.5	122		50	96.2		25
	N-BUTYLBENZENE	ND	U	50	ND	U	2.5	ND	U	50	14	J	25
	N-PROPYLBENZENE	122		50	132		2.5	118		50	89.1		25
	P-ISOPROPYLTOLUENE	ND	U	50	107		2.5	105		50	84		25
	SEC-BUTYLBENZENE	ND	U	50	15.6		2.5	ND	U	50	15.9	J	25
	TERT-BUTYLBENZENE	ND	U	50	ND	U	2.5	ND	U	50	ND	U	25
	TOLUENE	8330		50	6460	J-	25	6840		50	6470		25
	TRICHLOROETHENE	ND	U	50	ND	U	2.5	ND	U	50	19.2	J	25
	TRICHLOROFLUOROMETHANE	ND	U	100	ND	U	5	ND	U	100	ND	U	50
	XYLENES	2620		150	2590	J-	75	2750		150	2550		75

Notes:

a. EPA analytical methods listed are for the most recent sampling event.

b. Samples were collected using Geotech Bladder Pumps.

c. Samples were recollected (except for QuantArray-Chlor analysis) using replacement QED Bladder Pumps.

d. Sample was noted collected due to instantaneous drawdown in water level.

e. Sample was collected using a stainless steel bailer.

-- = Not applicable.

δ2H - Delta Deuterium.

0/00 - Per mille.

cells/mL = Cells per milliliter.

EPA = Environmental Protection Agency.

FD = Field duplicate.

ID = Identification.

J = Estimated value, concentration is less than LOQ but greater than laboratory method detection limit (DL).

J+ = Estimated value, concentration is less than LOQ but greater than laboratory method detection limit (DL); biased high.

J- = Estimated value, concentration is less than LOQ but greater than laboratory method detection limit (DL); biased low.

KAFB = Kirtland Air Force Base.

LOQ = Limit of Quantitation

µg/L = Microgram per liter.

mg/L = Milligram per liter.

NA = Not analyzed.

ND = Not detected.

NS = Not sampled.

REG = Regular/parent sample.

U = Analyte was not detected. The reported numerical value is at or below the LOQ.

UJ = Analyte was not detected. The reported value is estimated.

VAL QUAL = Validation qualifier.

VFA - Volatile fatty acid.

VOC = Volatile organic compound.

Table 11
Groundwater Analytical Results for KAFB-106IN1

	Phase Designation	Phase 3 Passive						Phase 4 Passive		
	Sample ID	106IN1-P3P-100418[d]			106IN1-P3P-111918[e]			106IN1-P4P-012119[e]		
	Sample Date	10/4/2018			11/19/2018			1/21/2019		
	Sample Pupose	REG			REG			REG		
Chemical Class and Analytical Method[a]	Parameter	Result	Val Qual	LOQ	Result	Val Qual	LOQ	Result	Val Qual	LOQ
Microbial Community (cells/mL) QuantArray-Chlor	1,1 DCA Reductase (DCA)	NS	--	--	ND	U	192	ND	U	5.6
	1,2 DCA Reductase (DCAR)	NS	--	--	ND	U	192	ND	U	5.6
	BAV1 Vinyl Chloride Reductase (BVC)	NS	--	--	ND	U	19.2	ND	U	0.6
	Chloroform Reductase (CFR)	NS	--	--	ND	U	192	ND	U	5.6
	Dehalobacter DCM (DCM)	NS	--	--	581000		192	21500		5.6
	Dehalobacter spp. (DHBt)	NS	--	--	50200		192	786		5.6
	Dehalobium chlorocoercia (DECO)	NS	--	--	1710000		192	10300		5.6
	Dehalococcoides (DHC)	NS	--	--	ND	U	19.2	ND	U	0.6
	Dehalogenimonas spp. (DHG)	NS	--	--	ND	U	192	ND	U	5.6
	Desulfitobacterium spp. (DSB)	NS	--	--	83400		192	5250		5.6
	Desulfuromonas spp. (DSM)	NS	--	--	731		192	ND	U	5.6
	Dichloromethane Dehalogenase (DCMA)	NS	--	--	ND	U	192	ND	U	5.6
	Epoxyalkane Transferase (EtnE)	NS	--	--	ND	U	192	ND	U	5.6
	Ethene Monooxygenase (EtnC)	NS	--	--	ND	U	192	ND	U	5.6
	Methanogens (MGN)	NS	--	--	161	J	192	13900		5.6
	PCE Reductase (PCE-1)	NS	--	--	ND	U	192	ND	U	5.6
	Phenol Hydroxylase (PHE)	NS	--	--	638000		192	14400		5.6
	PMMO	NS	--	--	NS	--	--	NS	--	--
	Soluble Methane Monooxygenase (SMMO)	NS	--	--	ND	U	192	ND	U	5.6
	Sulfate Reducing Bacteria (APS)	NS	--	--	10500000		192	18100		5.6
	tceA Reductase (TCE)	NS	--	--	ND	U	19.2	ND	U	0.6
	Toluene Dioxygenase (TOD)	NS	--	--	337		192	54.1		5.6
	Toluene Monooxygenase (RMO)	NS	--	--	340000		192	17200		5.6
	Toluene Monooxygenase 2 (RDEG)	NS	--	--	652000		192	16900		5.6
	Total Eubacteria (EBAC)	NS	--	--	780000000		192	16100000		5.6
	trans-1,2-DCE Reductase (TDR)	NS	--	--	ND	U	192	ND	U	5.6
	Trichlorobenzene Dioxygenase (TCBO)	NS	--	--	4660		192	70.6		5.6
	Vinyl Chloride Reductase (VCR)	NS	--	--	ND	U		ND	U	0.6
EDB (µg/L) EPA Method 8011	1,2-DIBROMOETHANE	0.38		0.0016	0.049	J	0.00029	0.032		0.0003
Fluorometric (µg/L) Spectrofluorophotometry	FLUORESCEIN	NS	--	--	NS	--	--	NS	--	--
Reduced Gases (µg/L) RSKSOP-175	ACETYLENE	ND	U	10	ND	U	10	ND		10
	ETHANE	ND	U	4	ND	U	4	ND		4
	ETHYLENE	1.1	J	5	ND	U	5	ND		5
	METHANE	9209.1		2	6278.9		2	8581.4		2
	PROPANE	ND	U	6	ND	U	6	ND		6
General Chemistry (mg/L) SM2320b, EPA Method 300, EPA Method 353.2, SM4500 PE	ALKALINITY	1000		5	2100		5	1400		5
	BROMIDE	3.8		1	2.3	J	5	1.1		0.5
	CHLORIDE	64		1	69		5	81		0.5
	IODIDE	4		1.5	4.3		1.5	3.3		1.5
	NITRATE	NS	--	--	NS	--	--	NS	--	--
	NITRITE	NS	--	--	NS	--	--	NS	--	--
	NITROGEN, NITRATE-NITRITE	ND	U	0.1	ND	U	0.5	ND		0.05
	O-PHOSPHATE (AS P)	12		0.75	9.9	J-	0.75	4.1		0.75
	SULFATE	6.4		2	ND	U	10	ND		1

Table 11
Groundwater Analytical Results for KAFB-106IN1

	Phase Designation	Phase 3 Passive						Phase 4 Passive		
	Sample ID	106IN1-P3P-100418[d]			106IN1-P3P-111918[e]			106IN1-P4P-012119[e]		
	Sample Date	10/4/2018			11/19/2018			1/21/2019		
	Sample Pupose	REG			REG			REG		
Chemical Class and Analytical Method[a]	Parameter	Result	Val Qual	LOQ	Result	Val Qual	LOQ	Result	Val Qual	LOQ
VFAs (mg/L) EPA Method 300m	ACETIC ACID	484.1		10	ND	U	1	ND		1
	BUTYRIC ACID	44.2		10	ND	U	1	ND		1
	FORMIC ACID	29		10	0.4	J	1	ND		1
	LACTIC ACID	ND	U	1	0.9	J	1	ND		1
	PROPIONIC ACID	304.6		10	ND	U	1	ND		1
	PYRUVIC ACID	85.1		10	ND	U	1	ND		1
	VALERIC ACID	8.3	J	10	ND	U	1	ND		1
Dissolved Metals (mg/L) EPA Method 6010	IRON	14		0.05	7.9		0.05	8.4		0.05
	MANGANESE	9.7		0.003	8		0.003	6.3		0.003
δ2H (‰) Mass Spectrometry, USGS Reston, VA	DELTA2H	NS	--	--	NS	--	--	NS	--	--
CSIA EDB δ13C ‰) Kuder et al, 2012	EDB δ	NS	--	--	NS	--	--	NS	--	--
VOCs (µg/L) EPA Method 8260	1,1,2-TRICHLOROETHANE	ND	U	25	ND	U	50	ND		5
	1,2,4-TRIMETHYLBENZENE	220		50	180		100	190		10
	1,2-DIBROMOETHANE	ND	U	50	ND	U	100	ND		10
	1,2-DICHLOROETHANE	ND	U	50	ND	U	100	NA	--	--
	1,3,5-TRIMETHYLBENZENE	78		25	65	J	50	63		5
	2-BUTANONE	200	J	500	ND	U	1000	ND		100
	2-CHLOROTOLUENE	ND	U	25	ND	U	50	ND		5
	2-HEXANONE	ND	U	250	ND	U	500	39		50
	4-METHYL-2-PENTANONE	110	J	250	ND	U	500	110		50
	ACETONE	750		500	ND	U	1000	ND		100
	BENZENE	1800		50	860		100	750		10
	CARBON DISULFIDE	ND	U	100	ND	U	200	ND		20
	CHLOROMETHANE	ND	U	50	ND	U	100	ND		10
	DICHLORODIFLUOROMETHANE	ND	U	50	ND	U	100	NA	--	--
	ETHYLBENZENE	760		50	670		100	NA	--	--
	ISOPROPYLBENZENE	100		50	95	J	100	83		10
	METHYL TERT-BUTYL ETHER	ND	U	25	ND	U	50	4.5		5
	METHYLENE CHLORIDE	ND	U	250	ND	U	500	ND		50
	NAPHTHALENE	ND	U	250	ND	U	500	86		50
	N-BUTYLBENZENE	ND	U	50	ND	U	100	9.1		10
	N-PROPYLBENZENE	78		50	70	J	100	61		10
	P-ISOPROPYLTOLUENE	51		50	ND	U	100	43		10
	SEC-BUTYLBENZENE	ND	U	50	ND	U	100	8.8		10
	TERT-BUTYLBENZENE	ND	U	50	ND	U	100	ND		10
	TOLUENE	4900		50	3300		100	1400		25
	TRICHLOROETHENE	ND	U	50	ND	U	100	ND		10
	TRICHLOROFLUOROMETHANE	ND	U	50	ND	U	100	ND		10
	XYLENES	2100		25	1800		50	1400		5

Notes:

a. EPA analytical methods listed are for the most recent sampling event.

b. Samples were collected using Geotech Bladder Pumps.

c. Samples were recollected (except for QuantArray-Chlor analysis) using replacement QED Bladder Pumps.

d. Sample was noted collected due to instantaneous drawdown in water level.

e. Sample was collected using a stainless steel bailer.

-- = Not applicable.

δ2H - Delta Deuterium.

0/00 - Per mille.

cells/mL = Cells per milliliter.

EPA = Environmental Protection Agency.

FD = Field duplicate.

ID = Identification.

J = Estimated value, concentration is less than LOQ but greater than laboratory method detection limit (DL).

J+ = Estimated value, concentration is less than LOQ but greater than laboratory method detection limit (DL); biased high.

J- = Estimated value, concentration is less than LOQ but greater than laboratory method detection limit (DL); biased low.

KAFB = Kirtland Air Force Base.

LOQ = Limit of Quantitation

µg/L = Microgram per liter.

mg/L = Milligram per liter.

NA = Not analyzed.

ND = Not detected.

NS = Not sampled.

REG = Regular/parent sample.

U = Analyte was not detected. The reported numerical value is at or below the LOQ.

UJ = Analyte was not detected. The reported value is estimated.

VAL QUAL = Validation qualifier.

VFA - Volatile fatty acid.

VOC = Volatile organic compound.

Table 12
Groundwater Analytical Results for KAFB-106MW1-I

	Phase Designation	Original Baseline[b]			New Baseline - QED Pumps[c]			Phase 1 Recirculation									Phase 1 Recirculation					
	Sample ID	106MW1I-BL-071817			106MW1I-BL-091817			106MW1I-P1R-100417			106MW1I-P1R-100617			106MW1I-P1R-100917			106MW1I-P1R-100917-FD			106MW1I-P1R-101217		
	Sample Date	7/18/2017			9/18/2017			10/4/2017			10/6/2017			10/9/2017			10/9/2017			10/12/2017		
	Sample Pupose	REG			REG			REG			REG			REG			FD			REG		
Chemical Class and Analytical Method[a]	**Parameter**	**Result**	**Val Qual**	**LOQ**	**Result**	**Val Qual**	**LOQ**	**Result**	**Val Qual**	**LOQ**	**Result**	**Val Qual**	**LOQ**	**Result**	**Val Qual**	**LOQ**	**Result**	**Val Qual**	**LOQ**	**Result**	**Val Qual**	**LOQ**
Microbial Community (cells/mL) QuantArray-Chlor	1,1 DCA Reductase (DCA)	ND	U	4.8	NS	--	--	NS	--	--	NS	--	--	NS	--	--	NS	--	--	NS	--	--
	1,2 DCA Reductase (DCAR)	ND	U	4.8	NS	--	--	NS	--	--	NS	--	--	NS	--	--	NS	--	--	NS	--	--
	BAV1 Vinyl Chloride Reductase (BVC)	ND	U	0.5	NS	--	--	NS	--	--	NS	--	--	NS	--	--	NS	--	--	NS	--	--
	Chloroform Reductase (CFR)	ND	U	4.8	NS	--	--	NS	--	--	NS	--	--	NS	--	--	NS	--	--	NS	--	--
	Dehalobacter DCM (DCM)	ND	U	4.8	NS	--	--	NS	--	--	NS	--	--	NS	--	--	NS	--	--	NS	--	--
	Dehalobacter spp. (DHBt)	5170		4.8	NS	--	--	NS	--	--	NS	--	--	NS	--	--	NS	--	--	NS	--	--
	Dehalobium chlorocoercia (DECO)	5830		4.8	NS	--	--	NS	--	--	NS	--	--	NS	--	--	NS	--	--	NS	--	--
	Dehalococcoides (DHC)	ND	U	0.5	NS	--	--	NS	--	--	NS	--	--	NS	--	--	NS	--	--	NS	--	--
	Dehalogenimonas spp. (DHG)	ND	U	4.8	NS	--	--	NS	--	--	NS	--	--	NS	--	--	NS	--	--	NS	--	--
	Desulfitobacterium spp. (DSB)	2980		4.8	NS	--	--	NS	--	--	NS	--	--	NS	--	--	NS	--	--	NS	--	--
	Desulfuromonas spp. (DSM)	9.8		4.8	NS	--	--	NS	--	--	NS	--	--	NS	--	--	NS	--	--	NS	--	--
	Dichloromethane Dehalogenase (DCMA)	ND	U	4.8	NS	--	--	NS	--	--	NS	--	--	NS	--	--	NS	--	--	NS	--	--
	Epoxyalkane Transferase (EtnE)	ND	U	4.8	NS	--	--	NS	--	--	NS	--	--	NS	--	--	NS	--	--	NS	--	--
	Ethene Monooxygenase (EtnC)	ND	U	4.8	NS	--	--	NS	--	--	NS	--	--	NS	--	--	NS	--	--	NS	--	--
	Methanogens (MGN)	115		4.8	NS	--	--	NS	--	--	NS	--	--	NS	--	--	NS	--	--	NS	--	--
	PCE Reductase (PCE-1)	NS	--	--	NS	--	--	NS	--	--	NS	--	--	NS	--	--	NS	--	--	NS	--	--
	Phenol Hydroxylase (PHE)	2870		4.8	NS	--	--	NS	--	--	NS	--	--	NS	--	--	NS	--	--	NS	--	--
	PMMO	14.9		4.8	NS	--	--	NS	--	--	NS	--	--	NS	--	--	NS	--	--	NS	--	--
	Soluble Methane Monooxygenase (SMMO)	930		4.8	NS	--	--	NS	--	--	NS	--	--	NS	--	--	NS	--	--	NS	--	--
	Sulfate Reducing Bacteria (APS)	2470		4.8	NS	--	--	NS	--	--	NS	--	--	NS	--	--	NS	--	--	NS	--	--
	tceA Reductase (TCE)	ND	U	0.5	NS	--	--	NS	--	--	NS	--	--	NS	--	--	NS	--	--	NS	--	--
	Toluene Dioxygenase (TOD)	482		4.8	NS	--	--	NS	--	--	NS	--	--	NS	--	--	NS	--	--	NS	--	--
	Toluene Monooxygenase (RMO)	0.7	J	4.8	NS	--	--	NS	--	--	NS	--	--	NS	--	--	NS	--	--	NS	--	--
	Toluene Monooxygenase 2 (RDEG)	6730		4.8	NS	--	--	NS	--	--	NS	--	--	NS	--	--	NS	--	--	NS	--	--
	Total Eubacteria (EBAC)	862000		4.8	NS	--	--	NS	--	--	NS	--	--	NS	--	--	NS	--	--	NS	--	--
	trans-1,2-DCE Reductase (TDR)	NS	--	--	NS	--	--	NS	--	--	NS	--	--	NS	--	--	NS	--	--	NS	--	--
	Trichlorobenzene Dioxygenase (TCBO)	2740		4.8	NS	--	--	NS	--	--	NS	--	--	NS	--	--	NS	--	--	NS	--	--
	Vinyl Chloride Reductase (VCR)	ND	U	0.5	NS	--	--	NS	--	--	NS	--	--	NS	--	--	NS	--	--	NS	--	--
EDB (µg/L) EPA Method 8011	1,2-DIBROMOETHANE	ND	UJ	0.0191	ND	UJ	0.0191	NS	--	--	NS	--	--	NS	--	--	NS	--	--	NS	--	--
Fluorometric (µg/L) Spectrofluorophotometry	FLUORESCEIN	ND	U	0.01	ND	U	0.01	ND	U	0.01	ND	U	0.01	ND	U	0.01	ND	U	0.01	ND	U	0.01
Reduced Gases (µg/L) RSKSOP-175	ACETYLENE	ND	U	10	ND	U	10	NS	--	--	NS	--	--	NS	--	--	NS	--	--	NS	--	--
	ETHANE	ND	U	4	ND	U	4	NS	--	--	NS	--	--	NS	--	--	NS	--	--	NS	--	--
	ETHYLENE	ND	U	5	ND	U	5	NS	--	--	NS	--	--	NS	--	--	NS	--	--	NS	--	--
	METHANE	ND	U	2	ND	U	2	NS	--	--	NS	--	--	NS	--	--	NS	--	--	NS	--	--
	PROPANE	ND	U	6	ND	U	6	NS	--	--	NS	--	--	NS	--	--	NS	--	--	NS	--	--
General Chemistry (mg/L) SM2320b, EPA Method 300, EPA Method 353.2, SM4500 PE	ALKALINITY	146		1	182		1	NS	--	--	NS	--	--	NS	--	--	NS	--	--	NS	--	--
	BROMIDE	0.424		0.125	0.409		0.125	NS	--	--	NS	--	--	NS	--	--	NS	--	--	NS	--	--
	CHLORIDE	37.5		0.33	40.1		0.33	NS	--	--	NS	--	--	NS	--	--	NS	--	--	NS	--	--
	IODIDE	ND	U	0.2	ND	U	0.75	NS	--	--	NS	--	--	NS	--	--	NS	--	--	NS	--	--
	NITRATE	NS	--	--	NS	--	--	NS	--	--	NS	--	--	NS	--	--	NS	--	--	NS	--	--
	NITRITE	NS	--	--	NS	--	--	NS	--	--	NS	--	--	NS	--	--	NS	--	--	NS	--	--
	NITROGEN, NITRATE-NITRITE	ND	U	0.375	ND	U	0.375	NS	--	--	NS	--	--	NS	--	--	NS	--	--	NS	--	--
	O-PHOSPHATE (AS P)	0.0142		0.02	ND	U	0.02	NS	--	--	NS	--	--	NS	--	--	NS	--	--	NS	--	--
	SULFATE	27.6		1	23.8		1	NS	--	--	NS	--	--	NS	--	--	NS	--	--	NS	--	--
VFAs (mg/L) EPA Method 300m	ACETIC ACID	ND	U	1	1.22		1	NS	--	--	NS	--	--	NS	--	--	NS	--	--	NS	--	--
	BUTYRIC ACID	ND	U	1	ND	U	1	NS	--	--	NS	--	--	NS	--	--	NS	--	--	NS	--	--
	FORMIC ACID	ND	U	1	ND	U	1	NS	--	--	NS	--	--	NS	--	--	NS	--	--	NS	--	--
	LACTIC ACID	ND	U	1	ND	U	1	NS	--	--	NS	--	--	NS	--	--	NS	--	--	NS	--	--
	PROPIONIC ACID	ND	U	1	ND	U	1	NS	--	--	NS	--	--	NS	--	--	NS	--	--	NS	--	--
	PYRUVIC ACID	ND	U	1	ND	U	1	NS	--	--	NS	--	--	NS	--	--	NS	--	--	NS	--	--
	VALERIC ACID	ND	U	1	ND	U	1	NS	--	--	NS	--	--	NS	--	--	NS	--	--	NS	--	--

Table 12
Groundwater Analytical Results for KAFB-106MW1-I

	Phase Designation	Original Baseline[b]			New Baseline - QED Pumps[c]			Phase 1 Recirculation									Phase 1 Recirculation					
	Sample ID	106MW1I-BL-071817			106MW1I-BL-091817			106MW1I-P1R-100417			106MW1I-P1R-100617			106MW1I-P1R-100917			106MW1I-P1R-100917-FD			106MW1I-P1R-101217		
	Sample Date	7/18/2017			9/18/2017			10/4/2017			10/6/2017			10/9/2017			10/9/2017			10/12/2017		
	Sample Pupose	REG			REG			REG			REG			REG			FD			REG		
Chemical Class and Analytical Method[a]	Parameter	Result	Val Qual	LOQ	Result	Val Qual	LOQ	Result	Val Qual	LOQ	Result	Val Qual	LOQ	Result	Val Qual	LOQ	Result	Val Qual	LOQ	Result	Val Qual	LOQ
Dissolved Metals (mg/L) EPA Method 6010	IRON	ND	U	0.06	ND	UJ	0.06	NS	--	--	NS	--	--	NS	--	--	NS	--	--	NS	--	--
	MANGANESE	0.0363		0.006	0.0293	J-	0.006	NS	--	--	NS	--	--	NS	--	--	NS	--	--	NS	--	--
δ2H (0/00) Mass Spectrometry, USGS Reston, VA	DELTA2H	-97.11		-99	-94.92		-99	-95.52		-99	-96.51		-99	-96.02		-99	-96.54		-99	-95.6		-99
VOCs (µg/L) EPA Method 8260	1,1,2-TRICHLOROETHANE	ND	U	1	ND	U	1	NS	--	--	NS	--	--	NS	--	--	NS	--	--	NS	--	--
	1,2,4-TRIMETHYLBENZENE	ND	U	1	ND	U	1	NS	--	--	NS	--	--	NS	--	--	NS	--	--	NS	--	--
	1,2-DIBROMOETHANE	ND	U	1	ND	U	1	NS	--	--	NS	--	--	NS	--	--	NS	--	--	NS	--	--
	1,2-DICHLOROETHANE	1.22	J	1	1.12	J	1	NS	--	--	NS	--	--	NS	--	--	NS	--	--	NS	--	--
	1,3,5-TRIMETHYLBENZENE	1.15	J	1	ND	U	1	NS	--	--	NS	--	--	NS	--	--	NS	--	--	NS	--	--
	2-BUTANONE	ND	U	10	ND	U	10	NS	--	--	NS	--	--	NS	--	--	NS	--	--	NS	--	--
	2-CHLOROTOLUENE	ND	U	1	ND	U	1	NS	--	--	NS	--	--	NS	--	--	NS	--	--	NS	--	--
	2-HEXANONE	ND	U	5	ND	U	5	NS	--	--	NS	--	--	NS	--	--	NS	--	--	NS	--	--
	4-METHYL-2-PENTANONE	ND	U	5	ND	U	5	NS	--	--	NS	--	--	NS	--	--	NS	--	--	NS	--	--
	ACETONE	35.5		10	22.5		10	NS	--	--	NS	--	--	NS	--	--	NS	--	--	NS	--	--
	BENZENE	ND	U	1	ND	U	1	NS	--	--	NS	--	--	NS	--	--	NS	--	--	NS	--	--
	CARBON DISULFIDE	ND	U	1	ND	U	1	NS	--	--	NS	--	--	NS	--	--	NS	--	--	NS	--	--
	CHLOROMETHANE	ND	U	1	ND	U	1	NS	--	--	NS	--	--	NS	--	--	NS	--	--	NS	--	--
	DICHLORODIFLUOROMETHANE	ND	U	2	ND	U	2	NS	--	--	NS	--	--	NS	--	--	NS	--	--	NS	--	--
	ETHYLBENZENE	ND	U	1	ND	U	1	NS	--	--	NS	--	--	NS	--	--	NS	--	--	NS	--	--
	ISOPROPYLBENZENE	12.9		1	1.91	J	1	NS	--	--	NS	--	--	NS	--	--	NS	--	--	NS	--	--
	METHYL TERT-BUTYL ETHER	0.655	J	1	ND	U	1	NS	--	--	NS	--	--	NS	--	--	NS	--	--	NS	--	--
	METHYLENE CHLORIDE	ND	U	2	ND	U	2	NS	--	--	NS	--	--	NS	--	--	NS	--	--	NS	--	--
	NAPHTHALENE	ND	U	1	ND	U	1	NS	--	--	NS	--	--	NS	--	--	NS	--	--	NS	--	--
	N-BUTYLBENZENE	ND	U	1	ND	U	1	NS	--	--	NS	--	--	NS	--	--	NS	--	--	NS	--	--
	N-PROPYLBENZENE	ND	U	1	ND	U	1	NS	--	--	NS	--	--	NS	--	--	NS	--	--	NS	--	--
	P-ISOPROPYLTOLUENE	2.02		1	ND	U	1	NS	--	--	NS	--	--	NS	--	--	NS	--	--	NS	--	--
	SEC-BUTYLBENZENE	ND	U	1	ND	U	1	NS	--	--	NS	--	--	NS	--	--	NS	--	--	NS	--	--
	TERT-BUTYLBENZENE	ND	U	1	ND	U	1	NS	--	--	NS	--	--	NS	--	--	NS	--	--	NS	--	--
	TOLUENE	0.642	J	1	0.612	J	1	NS	--	--	NS	--	--	NS	--	--	NS	--	--	NS	--	--
	TRICHLOROETHENE	ND	U	1	ND	U	1	NS	--	--	NS	--	--	NS	--	--	NS	--	--	NS	--	--
	TRICHLOROFLUOROMETHANE	ND	U	2	ND	U	2	NS	--	--	NS	--	--	NS	--	--	NS	--	--	NS	--	--
	XYLENES	ND	U	3	ND	U	3	NS	--	--	NS	--	--	NS	--	--	NS	--	--	NS	--	--

Notes:

a. EPA analytical methods listed are for the most recent sampling event.

b. Samples were collected using Geotech Bladder Pumps.

c. Samples were recollected (except for QuantArray-Chlor analysis) using replacement QED Bladder Pumps.

-- = Not applicable.

δ2H - Delta Deuterium.

0/00 - Per mille.

cells/mL = Cells per milliliter.

EPA = Environmental Protection Agency.

FD = Field duplicate.

ID = Identification.

J = Estimated value, concentration is less than LOQ but greater than laboratory method detection limit (DL).

J+ = Estimated value, concentration is less than LOQ but greater than laboratory method detection limit (DL); biased high.

J- = Estimated value, concentration is less than LOQ but greater than laboratory method detection limit (DL); biased low.

KAFB = Kirtland Air Force Base.

LOQ = Limit of Quantitation

µg/L = Microgram per liter.

mg/L = Milligram per liter.

ND = Not detected.

NS = Not sampled.

REG = Regular/parent sample.

U = Analyte was not detected. The reported numerical value is at or below the LOQ.

UJ = Analyte was not detected. The reported value is estimated.

VAL QUAL = Validation qualifier.

VFA - Volatile fatty acid.

VOC = Volatile organic compound.

Table 12
Groundwater Analytical Results for KAFB-106MW1-I

	Phase Designation	Phase 1 Recirculation						Phase 1 Recirculation						Phase 1 Passive						Phase 2 Recirculation		
	Sample ID	106MW1I-P1R-101617			106MW1I-P1R-102017			106MW1I-P1R-102517			106MW1I-P1R-110117			106MW1I-P1P-111517			106MW1I-P1P-112817			106MW1I-P2R-010918		
	Sample Date	10/16/2017			10/20/2017			10/25/2017			11/1/2017			11/15/2017			11/28/2017			1/9/2018		
	Sample Pupose	REG			REG			REG			REG			REG			REG			Phase 1 Passive+AP1:AV1		
Chemical Class and Analytical Method[a]	**Parameter**	**Result**	**Val Qual**	**LOQ**	**Result**	**Val Qual**	**LOQ**	**Result**	**Val Qual**	**LOQ**	**Result**	**Val Qual**	**LOQ**	**Result**	**Val Qual**	**LOQ**	**Result**	**Val Qual**	**LOQ**	**Result**	**Val Qual**	**LOQ**
Microbial Community (cells/mL) QuantArray-Chlor	1,1 DCA Reductase (DCA)	NS	--	--	NS	--	--	NS	--	--	NS	--	--	NS	--	--	ND	U	5.2	NS	--	--
	1,2 DCA Reductase (DCAR)	NS	--	--	NS	--	--	NS	--	--	NS	--	--	NS	--	--	ND	U	5.2	NS	--	--
	BAV1 Vinyl Chloride Reductase (BVC)	NS	--	--	NS	--	--	NS	--	--	NS	--	--	NS	--	--	ND	U	0.5	NS	--	--
	Chloroform Reductase (CFR)	NS	--	--	NS	--	--	NS	--	--	NS	--	--	NS	--	--	ND	U	5.2	NS	--	--
	Dehalobacter DCM (DCM)	NS	--	--	NS	--	--	NS	--	--	NS	--	--	NS	--	--	ND	U	5.2	NS	--	--
	Dehalobacter spp. (DHBt)	NS	--	--	NS	--	--	NS	--	--	NS	--	--	NS	--	--	1280		5.2	NS	--	--
	Dehalobium chlorocoercia (DECO)	NS	--	--	NS	--	--	NS	--	--	NS	--	--	NS	--	--	ND	U	5.2	NS	--	--
	Dehalococcoides (DHC)	NS	--	--	NS	--	--	NS	--	--	NS	--	--	NS	--	--	ND	U	0.5	NS	--	--
	Dehalogenimonas spp. (DHG)	NS	--	--	NS	--	--	NS	--	--	NS	--	--	NS	--	--	ND	U	5.2	NS	--	--
	Desulfitobacterium spp. (DSB)	NS	--	--	NS	--	--	NS	--	--	NS	--	--	NS	--	--	3190		5.2	NS	--	--
	Desulfuromonas spp. (DSM)	NS	--	--	NS	--	--	NS	--	--	NS	--	--	NS	--	--	73.5		5.2	NS	--	--
	Dichloromethane Dehalogenase (DCMA)	NS	--	--	NS	--	--	NS	--	--	NS	--	--	NS	--	--	ND	U	5.2	NS	--	--
	Epoxyalkane Transferase (EtnE)	NS	--	--	NS	--	--	NS	--	--	NS	--	--	NS	--	--	ND	U	5.2	NS	--	--
	Ethene Monooxygenase (EtnC)	NS	--	--	NS	--	--	NS	--	--	NS	--	--	NS	--	--	ND	U	5.2	NS	--	--
	Methanogens (MGN)	NS	--	--	NS	--	--	NS	--	--	NS	--	--	NS	--	--	0.3	J	5.2	NS	--	--
	PCE Reductase (PCE-1)	NS	--	--	NS	--	--	NS	--	--	NS	--	--	NS	--	--	NS	--	--	NS	--	--
	Phenol Hydroxylase (PHE)	NS	--	--	NS	--	--	NS	--	--	NS	--	--	NS	--	--	1740		5.2	NS	--	--
	PMMO	NS	--	--	NS	--	--	NS	--	--	NS	--	--	NS	--	--	ND	U	5.2	NS	--	--
	Soluble Methane Monooxygenase (SMMO)	NS	--	--	NS	--	--	NS	--	--	NS	--	--	NS	--	--	ND	U	5.2	NS	--	--
	Sulfate Reducing Bacteria (APS)	NS	--	--	NS	--	--	NS	--	--	NS	--	--	NS	--	--	19600		5.2	NS	--	--
	tceA Reductase (TCE)	NS	--	--	NS	--	--	NS	--	--	NS	--	--	NS	--	--	ND	U	0.5	NS	--	--
	Toluene Dioxygenase (TOD)	NS	--	--	NS	--	--	NS	--	--	NS	--	--	NS	--	--	2290		5.2	NS	--	--
	Toluene Monooxygenase (RMO)	NS	--	--	NS	--	--	NS	--	--	NS	--	--	NS	--	--	2400		5.2	NS	--	--
	Toluene Monooxygenase 2 (RDEG)	NS	--	--	NS	--	--	NS	--	--	NS	--	--	NS	--	--	590		5.2	NS	--	--
	Total Eubacteria (EBAC)	NS	--	--	NS	--	--	NS	--	--	NS	--	--	NS	--	--	284000		5.2	NS	--	--
	trans-1,2-DCE Reductase (TDR)	NS	--	--	NS	--	--	NS	--	--	NS	--	--	NS	--	--	NS	--	--	NS	--	--
	Trichlorobenzene Dioxygenase (TCBO)	NS	--	--	NS	--	--	NS	--	--	NS	--	--	NS	--	--	427		5.2	NS	--	--
	Vinyl Chloride Reductase (VCR)	NS	--	--	NS	--	--	NS	--	--	NS	--	--	NS	--	--	ND	U	0.5	NS	--	--
EDB (µg/L) EPA Method 8011	1,2-DIBROMOETHANE	NS	--	--	NS	--	--	6.28		1.88	NS	--	--	19.7		3.79	0.302		0.0189	43.4		1.91
Fluorometric (µg/L) Spectrofluorophotometry	FLUORESCEIN	ND	U	0.01	ND	U	0.01	26.642		0.01	50.107		0.01	16.293		0.01	0.064		0.01	NS	--	--
Reduced Gases (µg/L) RSKSOP-175	ACETYLENE	NS	--	--	NS	--	--	ND	U	10	NS	--	--	ND	U	10	ND	U	10	ND	U	10
	ETHANE	NS	--	--	NS	--	--	ND	U	4	NS	--	--	ND	U	4	ND	U	4	ND	U	4
	ETHYLENE	NS	--	--	NS	--	--	ND	U	5	NS	--	--	ND	U	5	ND	U	5	2.1	J	5
	METHANE	NS	--	--	NS	--	--	ND	U	2	NS	--	--	ND	U	2	ND	U	2	1.14	J	2
	PROPANE	NS	--	--	NS	--	--	ND	U	6	NS	--	--	ND	U	6	ND	U	6	ND	U	6
General Chemistry (mg/L) SM2320b, EPA Method 300, EPA Method 353.2, SM4500 PE	ALKALINITY	NS	--	--	NS	--	--	284		1	NS	--	--	188		1	164		1	325		1
	BROMIDE	NS	--	--	NS	--	--	0.309		0.125	NS	--	--	0.591		0.125	0.779		0.125	0.547		0.25
	CHLORIDE	NS	--	--	NS	--	--	27.8		0.33	NS	--	--	45.9		0.33	50.1		0.33	47.5		0.66
	IODIDE	NS	--	--	NS	--	--	ND	U	0.75	NS	--	--	ND	U	0.75	ND	U	0.75	ND	U	0.75
	NITRATE	NS	--	--	NS	--	--	NS	--	--	NS	--	--	NS	--	--	NS	--	--	NS	--	--
	NITRITE	NS	--	--	NS	--	--	NS	--	--	NS	--	--	NS	--	--	NS	--	--	NS	--	--
	NITROGEN, NITRATE-NITRITE	NS	--	--	NS	--	--	ND	U	0.375	NS	--	--	0.371	J	0.375	ND	U	0.375	ND	U	0.375
	O-PHOSPHATE (AS P)	NS	--	--	NS	--	--	ND	U	0.02	NS	--	--	0.0116	J	0.02	ND	U	0.02	ND	U	0.02
	SULFATE	NS	--	--	NS	--	--	24.4		1	NS	--	--	17.1		1	11.7		1	7.22		2
VFAs (mg/L) EPA Method 300m	ACETIC ACID	NS	--	--	NS	--	--	ND	U	1	NS	--	--	1.62		1	1.31		1	0.39	J	1
	BUTYRIC ACID	NS	--	--	NS	--	--	ND	U	1	NS	--	--	ND	U	1	ND	U	1	ND	U	1
	FORMIC ACID	NS	--	--	NS	--	--	ND	U	1	NS	--	--	ND	U	1	ND	U	1	ND	U	1
	LACTIC ACID	NS	--	--	NS	--	--	ND	U	1	NS	--	--	ND	U	1	ND	U	1	1.59		1
	PROPIONIC ACID	NS	--	--	NS	--	--	ND	U	1	NS	--	--	ND	U	1	ND	U	1	ND	U	1
	PYRUVIC ACID	NS	--	--	NS	--	--	ND	U	1	NS	--	--	ND	U	1	ND	U	1	ND	U	1
	VALERIC ACID	NS	--	--	NS	--	--	ND	U	1	NS	--	--	ND	U	1	ND	U	1	ND	U	1

Table 12
Groundwater Analytical Results for KAFB-106MW1-I

	Phase Designation	Phase 1 Recirculation						Phase 1 Recirculation						Phase 1 Passive						Phase 2 Recirculation		
	Sample ID	106MW1I-P1R-101617			106MW1I-P1R-102017			106MW1I-P1R-102517			106MW1I-P1R-110117			106MW1I-P1P-111517			106MW1I-P1P-112817			106MW1I-P2R-010918		
	Sample Date	10/16/2017			10/20/2017			10/25/2017			11/1/2017			11/15/2017			11/28/2017			1/9/2018		
	Sample Pupose	REG			REG			REG			REG			REG			REG			Phase 1 Passive+AP1:AV1		
Chemical Class and Analytical Method[a]	**Parameter**	**Result**	**Val Qual**	**LOQ**	**Result**	**Val Qual**	**LOQ**	**Result**	**Val Qual**	**LOQ**	**Result**	**Val Qual**	**LOQ**	**Result**	**Val Qual**	**LOQ**	**Result**	**Val Qual**	**LOQ**	**Result**	**Val Qual**	**LOQ**
Dissolved Metals (mg/L) EPA Method 6010	IRON	NS	--	--	NS	--	--	ND	U	0.06	NS	--	--	1.11		0.06	ND	U	0.06	1.39		0.06
	MANGANESE	NS	--	--	NS	--	--	0.26		0.006	NS	--	--	0.318		0.006	0.0213		0.006	3.29		0.006
δ2H (0/00) Mass Spectrometry, USGS Reston, VA	DELTA2H	-95.5		-99	-95.32		-99	-73.33		-99	-62.43		-99	-84.99		-99	-95.69		-99	NS	--	--
VOCs (µg/L) EPA Method 8260	1,1,2-TRICHLOROETHANE	NS	--	--	NS	--	--	ND	U	2.5	NS	--	--	ND	U	2.5	ND	U	1	ND	U	12.5
	1,2,4-TRIMETHYLBENZENE	NS	--	--	NS	--	--	50.7		2.5	NS	--	--	31.3		2.5	0.631	J	1	131		12.5
	1,2-DIBROMOETHANE	NS	--	--	NS	--	--	8.58		2.5	NS	--	--	27.4		2.5	ND	U	1	32.5		12.5
	1,2-DICHLOROETHANE	NS	--	--	NS	--	--	1.46	J	2.5	NS	--	--	1.98	J	2.5	3.43		1	ND	U	12.5
	1,3,5-TRIMETHYLBENZENE	NS	--	--	NS	--	--	18.4		2.5	NS	--	--	19		2.5	1.31	J	1	81.8		12.5
	2-BUTANONE	NS	--	--	NS	--	--	28.3	J	25	NS	--	--	ND	U	25	ND	U	10	ND	U	125
	2-CHLOROTOLUENE	NS	--	--	NS	--	--	ND	U	2.5	NS	--	--	ND	U	2.5	ND	U	1	ND	U	12.5
	2-HEXANONE	NS	--	--	NS	--	--	27.9		12.5	NS	--	--	ND	U	12.5	ND	U	5	ND	U	62.5
	4-METHYL-2-PENTANONE	NS	--	--	NS	--	--	24.8	J	12.5	NS	--	--	7.24	J	12.5	ND	U	5	33.8	J	62.5
	ACETONE	NS	--	--	NS	--	--	147		25	NS	--	--	43.3	J	25	13.7	J	10	157	J	125
	BENZENE	NS	--	--	NS	--	--	371		2.5	NS	--	--	361		2.5	0.635	J	1	1200		12.5
	CARBON DISULFIDE	NS	--	--	NS	--	--	ND	U	2.5	NS	--	--	ND	U	2.5	ND	U	1	ND	U	12.5
	CHLOROMETHANE	NS	--	--	NS	--	--	ND	U	2.5	NS	--	--	ND	U	2.5	ND	U	1	ND	U	12.5
	DICHLORODIFLUOROMETHANE	NS	--	--	NS	--	--	ND	U	5	NS	--	--	ND	U	5	ND	U	2	ND	U	25
	ETHYLBENZENE	NS	--	--	NS	--	--	97		2.5	NS	--	--	24.6		2.5	ND	U	1	449		12.5
	ISOPROPYLBENZENE	NS	--	--	NS	--	--	15.3		2.5	NS	--	--	8.93		2.5	2.07		1	36.6		12.5
	METHYL TERT-BUTYL ETHER	NS	--	--	NS	--	--	ND	U	2.5	NS	--	--	ND	U	2.5	1.82	J	1	ND	U	12.5
	METHYLENE CHLORIDE	NS	--	--	NS	--	--	ND	U	5	NS	--	--	ND	U	5	ND	U	2	ND	U	25
	NAPHTHALENE	NS	--	--	NS	--	--	13.7		2.5	NS	--	--	10.4		2.5	ND	U	1	43.8		12.5
	N-BUTYLBENZENE	NS	--	--	NS	--	--	1.51	J	2.5	NS	--	--	1.52	J	2.5	ND	U	1	8.08	J	12.5
	N-PROPYLBENZENE	NS	--	--	NS	--	--	8.96		2.5	NS	--	--	1.72	J	2.5	ND	U	1	35.5		12.5
	P-ISOPROPYLTOLUENE	NS	--	--	NS	--	--	2.14	J	2.5	NS	--	--	2.53	J	2.5	ND	U	1	25	J	12.5
	SEC-BUTYLBENZENE	NS	--	--	NS	--	--	1.78	J	2.5	NS	--	--	ND	U	2.5	ND	U	1	6.56	J	12.5
	TERT-BUTYLBENZENE	NS	--	--	NS	--	--	ND	U	2.5	NS	--	--	ND	U	2.5	ND	U	1	ND	U	12.5
	TOLUENE	NS	--	--	NS	--	--	230		2.5	NS	--	--	117		2.5	0.918	J	1	2530		12.5
	TRICHLOROETHENE	NS	--	--	NS	--	--	ND	U	2.5	NS	--	--	ND	U	2.5	ND	U	1	ND	U	12.5
	TRICHLOROFLUOROMETHANE	NS	--	--	NS	--	--	ND	U	5	NS	--	--	ND	U	5	ND	U	2	ND	U	25
	XYLENES	NS	--	--	NS	--	--	271		7.5	NS	--	--	266		7.5	4.89	J	3	1190		37.5

Notes:

a. EPA analytical methods listed are for the most recent sampling event.

b. Samples were collected using Geotech Bladder Pumps.

c. Samples were recollected (except for QuantArray-Chlor analysis) using replacement QED Bladder Pumps.

-- = Not applicable.

δ2H - Delta Deuterium.

0/00 - Per mille.

cells/mL = Cells per milliliter.

EPA = Environmental Protection Agency.

FD = Field duplicate.

ID = Identification.

J = Estimated value, concentration is less than LOQ but greater than laboratory method detection limit (DL).

J+ = Estimated value, concentration is less than LOQ but greater than laboratory method detection limit (DL); biased high.

J- = Estimated value, concentration is less than LOQ but greater than laboratory method detection limit (DL); biased low.

KAFB = Kirtland Air Force Base.

LOQ = Limit of Quantitation

µg/L = Microgram per liter.

mg/L = Milligram per liter.

ND = Not detected.

NS = Not sampled.

REG = Regular/parent sample.

U = Analyte was not detected. The reported numerical value is at or below the LOQ.

UJ = Analyte was not detected. The reported value is estimated.

VAL QUAL = Validation qualifier.

VFA - Volatile fatty acid.

VOC = Volatile organic compound.

Table 12
Groundwater Analytical Results for KAFB-106MW1-I

	Phase Designation	Phase 2 Recirculation									Phase 2 Passive					
	Sample ID	106MW1I-P2R-011618			106MW1I-P2R-012418			106MW1I-P2R-012418-FD			106MW1I-P2P-030618			106MW1I-P2P-041018		
	Sample Date	1/16/2018			1/24/2018			1/24/2018			3/6/2018			4/10/2018		
	Sample Pupose	REG			REG			FD			REG			REG		
Chemical Class and Analytical Method[a]	**Parameter**	**Result**	**Val Qual**	**LOQ**	**Result**	**Val Qual**	**LOQ**	**Result**	**Val Qual**	**LOQ**	**Result**	**Val Qual**	**LOQ**	**Result**	**Val Qual**	**LOQ**
Microbial Community (cells/mL) QuantArray-Chlor	1,1 DCA Reductase (DCA)	NS	--	--	ND	U	4.9	NS	--	--	NS	--	--	NS	--	--
	1,2 DCA Reductase (DCAR)	NS	--	--	ND	U	4.9	NS	--	--	NS	--	--	NS	--	--
	BAV1 Vinyl Chloride Reductase (BVC)	NS	--	--	ND	U	0.5	NS	--	--	NS	--	--	NS	--	--
	Chloroform Reductase (CFR)	NS	--	--	ND	U	4.9	NS	--	--	NS	--	--	NS	--	--
	Dehalobacter DCM (DCM)	NS	--	--	ND	U	4.9	NS	--	--	NS	--	--	NS	--	--
	Dehalobacter spp. (DHBt)	NS	--	--	219000		4.9	NS	--	--	NS	--	--	NS	--	--
	Dehalobium chlorocoercia (DECO)	NS	--	--	6200		4.9	NS	--	--	NS	--	--	NS	--	--
	Dehalococcoides (DHC)	NS	--	--	ND	U	0.5	NS	--	--	NS	--	--	NS	--	--
	Dehalogenimonas spp. (DHG)	NS	--	--	ND	U	4.9	NS	--	--	NS	--	--	NS	--	--
	Desulfitobacterium spp. (DSB)	NS	--	--	107000		4.9	NS	--	--	NS	--	--	NS	--	--
	Desulfuromonas spp. (DSM)	NS	--	--	69.2		4.9	NS	--	--	NS	--	--	NS	--	--
	Dichloromethane Dehalogenase (DCMA)	NS	--	--	ND	U	4.9	NS	--	--	NS	--	--	NS	--	--
	Epoxyalkane Transferase (EtnE)	NS	--	--	160		4.9	NS	--	--	NS	--	--	NS	--	--
	Ethene Monooxygenase (EtnC)	NS	--	--	ND	U	4.9	NS	--	--	NS	--	--	NS	--	--
	Methanogens (MGN)	NS	--	--	4.4	J	4.9	NS	--	--	NS	--	--	NS	--	--
	PCE Reductase (PCE-1)	NS	--	--	ND	U	4.9	NS	--	--	NS	--	--	NS	--	--
	Phenol Hydroxylase (PHE)	NS	--	--	55300		4.9	NS	--	--	NS	--	--	NS	--	--
	PMMO	NS	--	--	NS	--	--	NS	--	--	NS	--	--	NS	--	--
	Soluble Methane Monooxygenase (SMMO)	NS	--	--	1170		4.9	NS	--	--	NS	--	--	NS	--	--
	Sulfate Reducing Bacteria (APS)	NS	--	--	80200		4.9	NS	--	--	NS	--	--	NS	--	--
	tceA Reductase (TCE)	NS	--	--	ND	U	0.5	NS	--	--	NS	--	--	NS	--	--
	Toluene Dioxygenase (TOD)	NS	--	--	8450		4.9	NS	--	--	NS	--	--	NS	--	--
	Toluene Monooxygenase (RMO)	NS	--	--	127000		4.9	NS	--	--	NS	--	--	NS	--	--
	Toluene Monooxygenase 2 (RDEG)	NS	--	--	35900		4.9	NS	--	--	NS	--	--	NS	--	--
	Total Eubacteria (EBAC)	NS	--	--	3820000		4.9	NS	--	--	NS	--	--	NS	--	--
	trans-1,2-DCE Reductase (TDR)	NS	--	--	ND	U	4.9	NS	--	--	NS	--	--	NS	--	--
	Trichlorobenzene Dioxygenase (TCBO)	NS	--	--	531		4.9	NS	--	--	NS	--	--	NS	--	--
	Vinyl Chloride Reductase (VCR)	NS	--	--	ND	U		NS	--	--	NS	--	--	NS	--	--
EDB (µg/L) EPA Method 8011	1,2-DIBROMOETHANE	49.6		1.89	44.2		1.89	32.1		1.9	22.9	J+	1.91	16.2	J	1.9
Fluorometric (µg/L) Spectrofluorophotometry	FLUORESCEIN	NS	--	--	NS	--	--	NS	--	--	NS	--	--	NS	--	--
Reduced Gases (µg/L) RSKSOP-175	ACETYLENE	ND	U	10	ND	U	10	ND	U	10	ND	U	10	ND	U	10
	ETHANE	ND	U	4	0.75	J	4	0.78	J	4	0.9	J	4	1.24	J	4
	ETHYLENE	2.9	J	5	3.55	J	5	4.05	J	5	3.01	J	5	2.6		5
	METHANE	ND	U	2	1.31	J	2	1.35	J	2	1.4	J	2	1.58		2
	PROPANE	ND	U	6	ND	U	6	ND	U	6	ND	U	6	ND	U	6
General Chemistry (mg/L) SM2320b, EPA Method 300, EPA Method 353.2, SM4500 PE	ALKALINITY	358		1	366		1	360		1	389		1	267		1
	BROMIDE	0.636		0.25	0.529	J-	0.25	0.548		0.25	0.568		0.25	0.564		0.25
	CHLORIDE	54.2		0.66	48.5		0.66	48.9		0.66	49.9		0.66	50.3		0.66
	IODIDE	ND	U	0.75	0.56	J	0.75	0.58	J	0.75	1.2		0.75	ND	U	0.75
	NITRATE	NS	--	--	NS	--	--	NS	--	--	NS	--	--	ND	U	0.2
	NITRITE	NS	--	--	NS	--	--	NS	--	--	NS	--	--	ND	U	0.2
	NITROGEN, NITRATE-NITRITE	ND	U	0.375	ND	U	0.375	ND	U	0.375	ND	U	0.375	NS	--	--
	O-PHOSPHATE (AS P)	ND	U	0.02	ND	U	0.02	ND	U	0.02	ND	U	0.02	0.0436		0.02
	SULFATE	4.61	J	2	1.73	J	2	1.75	J	2	1.2	J	2	1.23	J	2
VFAs (mg/L) EPA Method 300m	ACETIC ACID	ND	U	1	0.98	J	1	0.39	J	1	3.31		1	1.15		1
	BUTYRIC ACID	ND	U	1	ND	U	1	ND	U	1	ND	U	1	ND	U	1
	FORMIC ACID	ND	U	1	ND	U	1	ND	U	1	ND	U	1	ND	U	1
	LACTIC ACID	0.69	J	1	0.97	J	1	0.39	J	1	1.15		1	0.79	J	1
	PROPIONIC ACID	ND	U	1	0.67	J	1	ND	U	1	ND	U	1	ND	U	1
	PYRUVIC ACID	ND	U	1	ND	U	1	ND	U	1	ND	U	1	ND	U	1
	VALERIC ACID	ND	U	1	ND	U	1	ND	U	1	ND	U	1	ND	U	1

Table 12
Groundwater Analytical Results for KAFB-106MW1-I

	Phase Designation	Phase 2 Recirculation									Phase 2 Passive					
	Sample ID	106MW1I-P2R-011618			106MW1I-P2R-012418			106MW1I-P2R-012418-FD			106MW1I-P2P-030618			106MW1I-P2P-041018		
	Sample Date	1/16/2018			1/24/2018			1/24/2018			3/6/2018			4/10/2018		
	Sample Pupose	REG			REG			FD			REG			REG		
Chemical Class and Analytical Method[a]	**Parameter**	**Result**	**Val Qual**	**LOQ**	**Result**	**Val Qual**	**LOQ**	**Result**	**Val Qual**	**LOQ**	**Result**	**Val Qual**	**LOQ**	**Result**	**Val Qual**	**LOQ**
Dissolved Metals (mg/L) EPA Method 6010	IRON	5.68		0.06	6.41	J-	0.06	6.51	J-	0.06	15.2		0.06	9.99	J-	0.06
	MANGANESE	0.968		0.006	1.09	J-	0.006	1.05	J-	0.006	2.23		0.006	2.37	J+	0.006
δ2H (0/00) Mass Spectrometry, USGS Reston, VA	DELTA2H	NS	--	--	NS	--	--	NS	--	--	NS	--	--	NS	--	--
VOCs (µg/L) EPA Method 8260	1,1,2-TRICHLOROETHANE	ND	U	25	ND	U	25	ND	U	25	ND	U	25	ND	U	1
	1,2,4-TRIMETHYLBENZENE	140		25	195		25	200		25	85.3		25	25.3		1
	1,2-DIBROMOETHANE	34	J	25	30.7	J	25	31.1	J	25	16.9	J	25	9.78		1
	1,2-DICHLOROETHANE	ND	U	25	ND	U	25	ND	U	25	ND	U	25	2.77		1
	1,3,5-TRIMETHYLBENZENE	79.1		25	98.1		25	100		25	51.8		25	26.8		1
	2-BUTANONE	ND	U	250	ND	U	250	ND	U	250	ND	U	250	8.17	J	10
	2-CHLOROTOLUENE	ND	U	25	ND	U	25	ND	U	25	ND	U	25	ND	U	1
	2-HEXANONE	ND	U	125	ND	U	125	ND	U	125	ND	U	125	ND	U	5
	4-METHYL-2-PENTANONE	ND	U	125	ND	U	125	ND	U	125	ND	U	125	5.06	J	5
	ACETONE	195	J	250	193	J	250	196	J	250	ND	U	250	38.9		10
	BENZENE	1380		25	1570		25	1660		25	573		25	97.7		1
	CARBON DISULFIDE	ND	U	25	ND	U	25	ND	U	25	ND	U	25	ND	U	1
	CHLOROMETHANE	ND	U	25	ND	U	25	ND	U	25	ND	U	25	ND	U	1
	DICHLORODIFLUOROMETHANE	ND	U	50	ND	U	50	ND	U	50	ND	U	50	ND	U	2
	ETHYLBENZENE	537		25	614		25	634		25	321		25	28.4		1
	ISOPROPYLBENZENE	41.4	J	25	51		25	49.5	J	25	33.4	J	25	31.2		1
	METHYL TERT-BUTYL ETHER	ND	U	25	ND	U	25	ND	U	25	ND	U	25	ND	U	1
	METHYLENE CHLORIDE	ND	U	50	ND	U	50	ND	U	50	ND	U	50	ND	U	2
	NAPHTHALENE	40.1	J	25	55.6		25	50.6		25	26.3	J	25	8.31		1
	N-BUTYLBENZENE	ND	U	25	ND	U	25	ND	U	25	ND	U	25	ND	U	1
	N-PROPYLBENZENE	34.2	J	25	44.3	J	25	46	J	25	23	J	25	2.57		1
	P-ISOPROPYLTOLUENE	25.5	J	25	ND	U	25	ND	U	25	125		25	134		1
	SEC-BUTYLBENZENE	ND	U	25	ND	U	25	ND	U	25	ND	U	25	0.761	J	1
	TERT-BUTYLBENZENE	ND	U	25	ND	U	25	ND	U	25	ND	U	25	ND	U	1
	TOLUENE	3930		25	5000		25	5090		25	2640		25	89		1
	TRICHLOROETHENE	ND	U	25	ND	U	25	ND	U	25	ND	U	25	ND	U	1
	TRICHLOROFLUOROMETHANE	ND	U	50	ND	U	50	ND	U	50	ND	U	50	ND	U	2
	XYLENES	1510		75	1770		75	1780		75	955		75	260		3

Notes:

a. EPA analytical methods listed are for the most recent sampling event.

b. Samples were collected using Geotech Bladder Pumps.

c. Samples were recollected (except for QuantArray-Chlor analysis) using replacement QED Bladder Pumps.

-- = Not applicable.

δ2H - Delta Deuterium.

0/00 - Per mille.

cells/mL = Cells per milliliter.

EPA = Environmental Protection Agency.

FD = Field duplicate.

ID = Identification.

J = Estimated value, concentration is less than LOQ but greater than laboratory method detection limit (DL).

J+ = Estimated value, concentration is less than LOQ but greater than laboratory method detection limit (DL); biased high.

J- = Estimated value, concentration is less than LOQ but greater than laboratory method detection limit (DL); biased low.

KAFB = Kirtland Air Force Base.

LOQ = Limit of Quantitation

µg/L = Microgram per liter.

mg/L = Milligram per liter.

ND = Not detected.

NS = Not sampled.

REG = Regular/parent sample.

U = Analyte was not detected. The reported numerical value is at or below the LOQ.

UJ = Analyte was not detected. The reported value is estimated.

VAL QUAL = Validation qualifier.

VFA - Volatile fatty acid.

VOC = Volatile organic compound.

Table 12
Groundwater Analytical Results for KAFB-106MW1-I

	Phase Designation	Phase 2 Passive						Phase 3 Recirculation									Phase 3 Recirculation					
	Sample ID	106MW1I-P2P-050818			106MW1I-P2P-061218			106MW1I-P3R-080718			106MW1I-P3R-081518			106MW1I-P3R-082118			106MW1I-P3R-082118-FD			106MW1I-P3R-082818		
	Sample Date	5/8/2018			6/12/2018			8/7/2018			8/15/2018			8/21/2018			8/21/2018			8/28/2018		
	Sample Pupose	REG			REG			REG			REG			Phase 2 Passive+BN1:BY1			FD			REG		
Chemical Class and Analytical Method[a]	Parameter	Result	Val Qual	LOQ	Result	Val Qual	LOQ	Result	Val Qual	LOQ	Result	Val Qual	LOQ	Result	Val Qual	LOQ	Result	Val Qual	LOQ	Result	Val Qual	LOQ
Microbial Community (cells/mL) QuantArray-Chlor	1,1 DCA Reductase (DCA)	ND	U	4.8	NS	--	--	NS	--	--	NS	--	--	ND	U	5	NS	--	--	NS	--	--
	1,2 DCA Reductase (DCAR)	ND	U	4.8	NS	--	--	NS	--	--	NS	--	--	ND	U	5	NS	--	--	NS	--	--
	BAV1 Vinyl Chloride Reductase (BVC)	ND	U	0.5	NS	--	--	NS	--	--	NS	--	--	ND	U	0.5	NS	--	--	NS	--	--
	Chloroform Reductase (CFR)	ND	U	4.8	NS	--	--	NS	--	--	NS	--	--	ND	U	5	NS	--	--	NS	--	--
	Dehalobacter DCM (DCM)	1620		4.8	NS	--	--	NS	--	--	NS	--	--	539		5	NS	--	--	NS	--	--
	Dehalobacter spp. (DHBt)	103000		4.8	NS	--	--	NS	--	--	NS	--	--	151000		5	NS	--	--	NS	--	--
	Dehalobium chlorocoercia (DECO)	11700		4.8	NS	--	--	NS	--	--	NS	--	--	12100		5	NS	--	--	NS	--	--
	Dehalococcoides (DHC)	ND	U	0.5	NS	--	--	NS	--	--	NS	--	--	ND	U	0.5	NS	--	--	NS	--	--
	Dehalogenimonas spp. (DHG)	ND	U	4.8	NS	--	--	NS	--	--	NS	--	--	ND	U	5	NS	--	--	NS	--	--
	Desulfitobacterium spp. (DSB)	35300		4.8	NS	--	--	NS	--	--	NS	--	--	105000		5	NS	--	--	NS	--	--
	Desulfuromonas spp. (DSM)	9.4		4.8	NS	--	--	NS	--	--	NS	--	--	18.8		5	NS	--	--	NS	--	--
	Dichloromethane Dehalogenase (DCMA)	ND	U	4.8	NS	--	--	NS	--	--	NS	--	--	ND	U	5	NS	--	--	NS	--	--
	Epoxyalkane Transferase (EtnE)	ND	U	4.8	NS	--	--	NS	--	--	NS	--	--	183		5	NS	--	--	NS	--	--
	Ethene Monooxygenase (EtnC)	ND	U	4.8	NS	--	--	NS	--	--	NS	--	--	ND	U	5	NS	--	--	NS	--	--
	Methanogens (MGN)	13.6		4.8	NS	--	--	NS	--	--	NS	--	--	151		5	NS	--	--	NS	--	--
	PCE Reductase (PCE-1)	ND	U	4.8	NS	--	--	NS	--	--	NS	--	--	ND	U	5	NS	--	--	NS	--	--
	Phenol Hydroxylase (PHE)	15300		4.8	NS	--	--	NS	--	--	NS	--	--	2080		5	NS	--	--	NS	--	--
	PMMO	NS	--	--	NS	--	--	NS	--	--	NS	--	--	NS	--	--	NS	--	--	NS	--	--
	Soluble Methane Monooxygenase (SMMO)	ND	U	4.8	NS	--	--	NS	--	--	NS	--	--	187		5	NS	--	--	NS	--	--
	Sulfate Reducing Bacteria (APS)	82200		4.8	NS	--	--	NS	--	--	NS	--	--	148000		5	NS	--	--	NS	--	--
	tceA Reductase (TCE)	ND	U	0.5	NS	--	--	NS	--	--	NS	--	--	ND	U	0.5	NS	--	--	NS	--	--
	Toluene Dioxygenase (TOD)	ND	U	4.8	NS	--	--	NS	--	--	NS	--	--	ND	U	5	NS	--	--	NS	--	--
	Toluene Monooxygenase (RMO)	19600		4.8	NS	--	--	NS	--	--	NS	--	--	69200		5	NS	--	--	NS	--	--
	Toluene Monooxygenase 2 (RDEG)	8320		4.8	NS	--	--	NS	--	--	NS	--	--	4550		5	NS	--	--	NS	--	--
	Total Eubacteria (EBAC)	4040000		4.8	NS	--	--	NS	--	--	NS	--	--	13600000		5	NS	--	--	NS	--	--
	trans-1,2-DCE Reductase (TDR)	ND	U	4.8	NS	--	--	NS	--	--	NS	--	--	ND	U	5	NS	--	--	NS	--	--
	Trichlorobenzene Dioxygenase (TCBO)	385		4.8	NS	--	--	NS	--	--	NS	--	--	ND	U	5	NS	--	--	NS	--	--
	Vinyl Chloride Reductase (VCR)	ND	U		NS	--	--	NS	--	--	NS	--	--	ND	U		NS	--	--	NS	--	--
EDB (µg/L) EPA Method 8011	1,2-DIBROMOETHANE	7.7		0.379	4.5		0.192	NA	--	--	2.3		0.006	2.7		0.03	2.9		0.03	0.94		0.006
Fluorometric (µg/L) Spectrofluorophotometry	FLUORESCEIN	NS	--	--	NS	--	--	NS	--	--	NS	--	--	NS	--	--	NS	--	--	NS	--	--
Reduced Gases (µg/L) RSKSOP-175	ACETYLENE	ND	U	10	ND	U	10	ND	U	10	ND	U	10	ND	U	10	ND	U	10	ND	U	10
	ETHANE	1	J	4	1.2	J	4	1.1	J	4	1	J	4	1.1	J	4	1.1	J	4	1.3	J	4
	ETHYLENE	1.26	J	5	2.3	J	5	2.1	J	5	3.8	J	5	3.7	J	5	3.8	J	5	6.3		5
	METHANE	1.2	J	2	7.4		2	18.5		2	16.6		2	13.9		2	14.8		2	13.8		2
	PROPANE	1.2	J	6	1.8	J	6	1.2	J	6	1.1	J	6	1.3	J	6	1.2	J	6	1.4	J	6
General Chemistry (mg/L) SM2320b, EPA Method 300, EPA Method 353.2, SM4500 PE	ALKALINITY	320	J-	1	348		1	NA	--	--	360		5	400		5	410		5	430		5
	BROMIDE	0.576	J-	0.25	0.619		0.25	NA	--	--	0.85		0.5	0.81		0.5	0.8		0.5	1		0.5
	CHLORIDE	50.8		0.66	56.8		0.66	NA	--	--	49		0.5	49		0.5	49		0.5	51		0.5
	IODIDE	ND	U	0.75	0.62	J	0.75	10		0.75	12		0.75	13		0.75	13		0.75	15		0.75
	NITRATE	ND	U	0.2	ND	U	0.2	NA	--	--	NS	--	--	NS	--	--	NS	--	--	NS	--	--
	NITRITE	ND	U	0.2	ND	U	0.2	NA	--	--	NS	--	--	NS	--	--	NS	--	--	NS	--	--
	NITROGEN, NITRATE-NITRITE	NS	--	--	NS	--	--	NA	--	--	ND	U	0.05	ND		0.05	ND		0.05	ND	U	0.05
	O-PHOSPHATE (AS P)	0.0167	J	0.02	0.0418		0.02	NA	--	--	ND	U	0.15	ND		0.15	ND		0.15	ND	U	0.15
	SULFATE	ND	U	2	ND	U	2	NA	--	--	ND	U	1	1.9		1	2.1		1	ND	U	1
VFAs (mg/L) EPA Method 300m	ACETIC ACID	0.8	J	1	3		1	14.4		1	27.7		1	40.7		10	39.5		10	49.3		10
	BUTYRIC ACID	ND	U	1	ND	U	1	ND	U	1	ND	U	1	ND	U	1	ND	U	1	ND	U	1
	FORMIC ACID	ND	U	1	ND	U	1	4.5	J	10	ND	U	1	0.9	J	10	1	J	10	1	J	10
	LACTIC ACID	0.79	J	1	0.8	J	1	0.3	J	1	0.6	J	1	0.7	J	1	1.1		1	0.5	J	1
	PROPIONIC ACID	ND	U	1	ND	U	1	ND	U	1	ND	U	1	ND	U	1	ND	U	1	ND	U	1
	PYRUVIC ACID	ND	U	1	ND	U	1	ND	U	1	ND	U	1	ND	U	1	ND	U	1	ND	U	1
	VALERIC ACID	ND	U	1	ND	U	1	ND	U	1	ND	U	1	ND	U	1	ND	U	1	ND	U	1

Table 12
Groundwater Analytical Results for KAFB-106MW1-I

	Phase Designation	Phase 2 Passive						Phase 3 Recirculation									Phase 3 Recirculation					
	Sample ID	106MW1I-P2P-050818			106MW1I-P2P-061218			106MW1I-P3R-080718			106MW1I-P3R-081518			106MW1I-P3R-082118			106MW1I-P3R-082118-FD			106MW1I-P3R-082818		
	Sample Date	5/8/2018			6/12/2018			8/7/2018			8/15/2018			8/21/2018			8/21/2018			8/28/2018		
	Sample Pupose	REG			REG			REG			REG			Phase 2 Passive+BN1:BY1			FD			REG		
Chemical Class and Analytical Method[a]	Parameter	Result	Val Qual	LOQ	Result	Val Qual	LOQ	Result	Val Qual	LOQ	Result	Val Qual	LOQ	Result	Val Qual	LOQ	Result	Val Qual	LOQ	Result	Val Qual	LOQ
Dissolved Metals (mg/L) EPA Method 6010	IRON	11		0.06	12.9		0.06	NA	--	--	7.3		0.05	6.9		0.05	7.1		0.05	7.4		0.05
	MANGANESE	2.65		0.006	3.87		0.006	NA	--	--	4.3		0.003	4.2		0.003	4.3		0.003	4.3		0.003
δ2H (0/00) Mass Spectrometry, USGS Reston, VA	DELTA2H	NS	--	--	NS	--	--	NS	--	--	NS	--	--	NS	--	--	NS	--	--	NS	--	--
VOCs (µg/L) EPA Method 8260	1,1,2-TRICHLOROETHANE	ND	U	2.5	ND	U	1	NA	--	--	ND	U	50	ND	U	2.5	ND	U	2.5	ND	U	50
	1,2,4-TRIMETHYLBENZENE	11.8		2.5	41.3		1	NA	--	--	710		100	350		5	360		5	450		100
	1,2-DIBROMOETHANE	9.48		2.5	7.18		1	NA	--	--	ND	U	100	3.9	J	5	3.4	J	5	ND	U	100
	1,2-DICHLOROETHANE	2.36	J	2.5	2.97		1	NA	--	--	ND	U	100	ND	U	5	3.6	J	5	ND	U	100
	1,3,5-TRIMETHYLBENZENE	19.9		2.5	28.1		1	NA	--	--	240		50	110		2.5	110		2.5	140		50
	2-BUTANONE	ND	U	25	6.42	J	10	NA	--	--	ND	U	1000	44	J	50	49	J	50	ND	U	1000
	2-CHLOROTOLUENE	ND	U	2.5	ND	U	1	NA	--	--	ND	U	50	ND	U	2.5	ND	U	2.5	ND	U	50
	2-HEXANONE	ND	U	12.5	ND	U	5	NA	--	--	ND	U	500	90		25	82		25	ND	U	500
	4-METHYL-2-PENTANONE	ND	U	12.5	4.1	J	5	NA	--	--	ND	U	500	73		25	76		25	ND	U	500
	ACETONE	33.6	J	25	25.4		10	NA	--	--	ND	U	1000	190		50	180		50	ND	U	1000
	BENZENE	54.7		2.5	128		1	NA	--	--	3500		100	2800		50	2900		50	3600		100
	CARBON DISULFIDE	ND	U	2.5	ND	U	1	NA	--	--	ND	U	200	ND	U	10	ND	U	10	ND	U	200
	CHLOROMETHANE	ND	U	2.5	ND	U	1	NA	--	--	ND	U	100	ND	U	5	ND	U	5	ND	U	100
	DICHLORODIFLUOROMETHANE	ND	U	5	ND	U	2	NA	--	--	ND	U	100	ND	U	5	ND	U	5	ND	U	100
	ETHYLBENZENE	8.56		2.5	91.3		1	NA	--	--	1800		100	980		5	980		5	1300		100
	ISOPROPYLBENZENE	36.3		2.5	64.4		1	NA	--	--	200		100	120		5	120		5	150		100
	METHYL TERT-BUTYL ETHER	ND	U	2.5	0.631	J	1	NA	--	--	ND	U	50	ND	U	2.5	ND	U	2.5	ND	U	50
	METHYLENE CHLORIDE	ND	U	5	ND	U	2	NA	--	--	ND	U	500	ND	U	25	ND	U	25	490	J	500
	NAPHTHALENE	3.02	J	2.5	11.3		1	NA	--	--	820		500	140		25	130		25	ND	U	500
	N-BUTYLBENZENE	ND	U	2.5	ND	U	1	NA	--	--	51	J	100	14		5	14		5	ND	U	100
	N-PROPYLBENZENE	ND	U	2.5	11.3		1	NA	--	--	200		100	110		5	110		5	130		100
	P-ISOPROPYLTOLUENE	153		2.5	138		1	NA	--	--	160		100	41		5	40		5	ND	U	100
	SEC-BUTYLBENZENE	ND	U	2.5	2.49		1	NA	--	--	ND	U	100	14		5	13		5	ND	U	100
	TERT-BUTYLBENZENE	ND	U	2.5	ND	U	1	NA	--	--	ND	U	100	ND	U	5	ND	U	5	ND	U	100
	TOLUENE	19.6		2.5	109		1	NA	--	--	8000		100	4900		50	5100		50	5900		100
	TRICHLOROETHENE	ND	U	2.5	ND	U	1	NA	--	--	ND	U	100	ND	U	5	ND	U	5	ND	U	100
	TRICHLOROFLUOROMETHANE	ND	U	5	ND	U	2	NA	--	--	ND	U	100	ND	U	5	ND	U	5	ND	U	100
	XYLENES	182		7.5	293		3	NA	--	--	5100		50	3100		25	3300		25	4600		50

Notes:

a. EPA analytical methods listed are for the most recent sampling event.

b. Samples were collected using Geotech Bladder Pumps.

c. Samples were recollected (except for QuantArray-Chlor analysis) using replacement QED Bladder Pumps.

-- = Not applicable.

δ2H - Delta Deuterium.

0/00 - Per mille.

cells/mL = Cells per milliliter.

EPA = Environmental Protection Agency.

FD = Field duplicate.

ID = Identification.

J = Estimated value, concentration is less than LOQ but greater than laboratory method detection limit (DL).

J+ = Estimated value, concentration is less than LOQ but greater than laboratory method detection limit (DL); biased high.

J- = Estimated value, concentration is less than LOQ but greater than laboratory method detection limit (DL); biased low.

KAFB = Kirtland Air Force Base.

LOQ = Limit of Quantitation

µg/L = Microgram per liter.

mg/L = Milligram per liter.

ND = Not detected.

NS = Not sampled.

REG = Regular/parent sample.

U = Analyte was not detected. The reported numerical value is at or below the LOQ.

UJ = Analyte was not detected. The reported value is estimated.

VAL QUAL = Validation qualifier.

VFA - Volatile fatty acid.

VOC = Volatile organic compound.

Table 12
Groundwater Analytical Results for KAFB-106MW1-I

	Phase Designation	Phase 3 Passive									Phase 4 Passive		
	Sample ID	106MW1I-P3P-091118			106MW1I-P3P-100318			106MW1I-P3P-111418			106MW1I-P4P-011619		
	Sample Date	9/11/2018			10/3/2018			11/14/2018			1/16/2019		
	Sample Pupose	REG			REG			REG			REG		
Chemical Class and Analytical Method[a]	Parameter	Result	Val Qual	LOQ	Result	Val Qual	LOQ	Result	Val Qual	LOQ	Result	Val Qual	LOQ
Microbial Community (cells/mL) QuantArray-Chlor	1,1 DCA Reductase (DCA)	NS	--	--	NS	--	--	ND	U	4.9	ND	U	4.9
	1,2 DCA Reductase (DCAR)	NS	--	--	NS	--	--	ND	U	4.9	ND	U	4.9
	BAV1 Vinyl Chloride Reductase (BVC)	NS	--	--	NS	--	--	ND	U	0.5	ND	U	0.5
	Chloroform Reductase (CFR)	NS	--	--	NS	--	--	ND	U	4.9	ND	U	4.9
	Dehalobacter DCM (DCM)	NS	--	--	NS	--	--	5900		4.9	3200		4.9
	Dehalobacter spp. (DHBt)	NS	--	--	NS	--	--	340000		4.9	304000		4.9
	Dehalobium chlorocoercia (DECO)	NS	--	--	NS	--	--	7860		4.9	12900		4.9
	Dehalococcoides (DHC)	NS	--	--	NS	--	--	ND	U	0.5	0.7		0.5
	Dehalogenimonas spp. (DHG)	NS	--	--	NS	--	--	6680		4.9	6090		4.9
	Desulfitobacterium spp. (DSB)	NS	--	--	NS	--	--	93700		4.9	92900		4.9
	Desulfuromonas spp. (DSM)	NS	--	--	NS	--	--	ND	U	4.9	35.6		4.9
	Dichloromethane Dehalogenase (DCMA)	NS	--	--	NS	--	--	ND	U	4.9	ND	U	4.9
	Epoxyalkane Transferase (EtnE)	NS	--	--	NS	--	--	75.6		4.9	10900000		4.9
	Ethene Monooxygenase (EtnC)	NS	--	--	NS	--	--	ND	U	4.9	112		4.9
	Methanogens (MGN)	NS	--	--	NS	--	--	ND	U	4.9	50.8		4.9
	PCE Reductase (PCE-1)	NS	--	--	NS	--	--	ND	U	4.9	ND	U	4.9
	Phenol Hydroxylase (PHE)	NS	--	--	NS	--	--	2210		4.9	5110		4.9
	PMMO	NS	--	--	NS	--	--	NS	--	--	NS	--	--
	Soluble Methane Monooxygenase (SMMO)	NS	--	--	NS	--	--	ND	U	4.9	67.2		4.9
	Sulfate Reducing Bacteria (APS)	NS	--	--	NS	--	--	59300		4.9	930000		4.9
	tceA Reductase (TCE)	NS	--	--	NS	--	--	ND	U	0.5	ND	U	0.5
	Toluene Dioxygenase (TOD)	NS	--	--	NS	--	--	ND	U	4.9	ND	U	4.9
	Toluene Monooxygenase (RMO)	NS	--	--	NS	--	--	7030		4.9	14000		4.9
	Toluene Monooxygenase 2 (RDEG)	NS	--	--	NS	--	--	2180		4.9	12700		4.9
	Total Eubacteria (EBAC)	NS	--	--	NS	--	--	3360000		4.9	10900000		4.9
	trans-1,2-DCE Reductase (TDR)	NS	--	--	NS	--	--	ND	U	4.9	ND	U	4.9
	Trichlorobenzene Dioxygenase (TCBO)	NS	--	--	NS	--	--	ND	U	4.9	ND	U	4.9
	Vinyl Chloride Reductase (VCR)	NS	--	--	NS	--	--	ND	U		0.2	J	0.5
EDB (µg/L) EPA Method 8011	1,2-DIBROMOETHANE	1.2		0.003	0.68		0.0031	0.77		0.0029	0.22		0.0015
Fluorometric (µg/L) Spectrofluorophotometry	FLUORESCEIN	NS	--	--	NS	--	--	NS	--	--	NS	--	--
Reduced Gases (µg/L) RSKSOP-175	ACETYLENE	ND	U	10	ND	U	10	ND	U	10	ND		10
	ETHANE	1.7	J	4	1.7	J	4	1.4	J	4	1		4
	ETHYLENE	8.6		5	7.8		5	6.7		5	2.2		5
	METHANE	18.9		2	14		2	14.5		2	8.4		2
	PROPANE	1.6	J	6	ND	U	6	1	J	6	1.4		6
General Chemistry (mg/L) SM2320b, EPA Method 300, EPA Method 353.2, SM4500 PE	ALKALINITY	440		5	420		5	420		5	360		5
	BROMIDE	0.98		0.5	2.1		0.5	1.2		0.5	1.1		0.5
	CHLORIDE	55		0.5	50		0.5	48		0.5	50		0.5
	IODIDE	12		0.75	15		0.75	16	J+	0.75	13		0.75
	NITRATE	NS	--	--	NS	--	--	NS	--	--	NS	--	--
	NITRITE	NS	--	--	NS	--	--	NS	--	--	NS	--	--
	NITROGEN, NITRATE-NITRITE	ND	U	0.1	ND	U	0.05	ND	U	0.05	ND		0.05
	O-PHOSPHATE (AS P)	ND	U	0.15	ND	UJ	0.15	ND	U	0.15	ND		0.15
	SULFATE	ND	U	1	ND	U	1	ND	U	1	ND		1
VFAs (mg/L) EPA Method 300m	ACETIC ACID	67.3		10	22.4		1	8.4		1	10.1		1
	BUTYRIC ACID	ND	U	1	ND	U	1	ND	U	1	ND		1
	FORMIC ACID	0.9	J	10	1	J	10	0.4	J	1	ND		1
	LACTIC ACID	0.4	J	1	0.6	J	1	1		1	0.7		1
	PROPIONIC ACID	6.8	J	10	ND	U	1	ND	U	1	ND		1
	PYRUVIC ACID	ND	U	1	ND	U	1	ND	U	1	ND		1
	VALERIC ACID	ND	U	1	ND	U	1	ND	U	1	ND		1

Table 12
Groundwater Analytical Results for KAFB-106MW1-I

	Phase Designation	Phase 3 Passive									Phase 4 Passive		
	Sample ID	106MW1I-P3P-091118			106MW1I-P3P-100318			106MW1I-P3P-111418			106MW1I-P4P-011619		
	Sample Date	9/11/2018			10/3/2018			11/14/2018			1/16/2019		
	Sample Pupose	REG			REG			REG			REG		
Chemical Class and Analytical Method[a]	**Parameter**	**Result**	**Val Qual**	**LOQ**	**Result**	**Val Qual**	**LOQ**	**Result**	**Val Qual**	**LOQ**	**Result**	**Val Qual**	**LOQ**
Dissolved Metals (mg/L) EPA Method 6010	IRON	7.1		0.05	8.8		0.05	7.1		0.05	5.8		0.05
	MANGANESE	4		0.003	3.4		0.003	3.2		0.003	2.6		0.003
δ2H (0/00) Mass Spectrometry, USGS Reston, VA	DELTA2H	NS	--	--	NS	--	--	NS	--	--	NS	--	--
VOCs (µg/L) EPA Method 8260	1,1,2-TRICHLOROETHANE	ND	U	50	ND	U	50	ND	U	50	ND		13
	1,2,4-TRIMETHYLBENZENE	440		100	410		100	380		100	290		25
	1,2-DIBROMOETHANE	ND	U	100	ND	U	100	ND	U	100	ND		25
	1,2-DICHLOROETHANE	ND	U	100	ND	U	100	ND	U	100	NA	--	--
	1,3,5-TRIMETHYLBENZENE	140		50	130		50	130		50	50		13
	2-BUTANONE	ND	U	1000	ND	U	1000	ND	U	1000	ND		250
	2-CHLOROTOLUENE	ND	U	50	ND	U	50	ND	U	50	ND		13
	2-HEXANONE	ND	U	500	ND	U	500	ND	U	500	ND		130
	4-METHYL-2-PENTANONE	ND	U	500	ND	U	500	ND	U	500	ND		130
	ACETONE	ND	U	1000	ND	U	1000	ND	U	1000	ND		250
	BENZENE	3100		100	3100		100	3300		100	2200		25
	CARBON DISULFIDE	ND	U	200	ND	U	200	ND	U	200	ND		50
	CHLOROMETHANE	ND	U	100	ND	U	100	ND	U	100	ND		25
	DICHLORODIFLUOROMETHANE	ND	U	100	ND	U	100	ND	U	100	NA	--	--
	ETHYLBENZENE	1500		100	1000		100	1300		100	NA	--	--
	ISOPROPYLBENZENE	150		100	180		100	170		100	160		25
	METHYL TERT-BUTYL ETHER	ND	U	50	ND	U	50	ND	U	50	ND		13
	METHYLENE CHLORIDE	ND	U	500	ND	U	500	ND	U	500	ND		130
	NAPHTHALENE	ND	U	500	ND	U	500	ND	U	500	94		130
	N-BUTYLBENZENE	ND	U	100	ND	U	100	ND	U	100	15		25
	N-PROPYLBENZENE	140		100	120		100	130		100	86		25
	P-ISOPROPYLTOLUENE	ND	U	100	ND	U	100	ND	U	100	49		25
	SEC-BUTYLBENZENE	ND	U	100	ND	U	100	ND	U	100	20		25
	TERT-BUTYLBENZENE	ND	U	100	ND	U	100	ND	U	100	ND		25
	TOLUENE	7300		100	3200		100	2100		100	740		25
	TRICHLOROETHENE	ND	U	100	ND	U	100	ND	U	100	ND		25
	TRICHLOROFLUOROMETHANE	ND	U	100	ND	U	100	ND	U	100	ND		25
	XYLENES	4700		50	3800		50	3900		50	1600		13

Notes:

a. EPA analytical methods listed are for the most recent sampling event.

b. Samples were collected using Geotech Bladder Pumps.

c. Samples were recollected (except for QuantArray-Chlor analysis) using replacement QED Bladder Pumps.

-- = Not applicable.

δ2H - Delta Deuterium.

0/00 - Per mille.

cells/mL = Cells per milliliter.

EPA = Environmental Protection Agency.

FD = Field duplicate.

ID = Identification.

J = Estimated value, concentration is less than LOQ but greater than laboratory method detection limit (DL).

J+ = Estimated value, concentration is less than LOQ but greater than laboratory method detection limit (DL); biased high.

J- = Estimated value, concentration is less than LOQ but greater than laboratory method detection limit (DL); biased low.

KAFB = Kirtland Air Force Base.

LOQ = Limit of Quantitation

µg/L = Microgram per liter.

mg/L = Milligram per liter.

ND = Not detected.

NS = Not sampled.

REG = Regular/parent sample.

U = Analyte was not detected. The reported numerical value is at or below the LOQ.

UJ = Analyte was not detected. The reported value is estimated.

VAL QUAL = Validation qualifier.

VFA - Volatile fatty acid.

VOC = Volatile organic compound.

Table 13
Groundwater Analytical Results for KAFB-106MW1-S

	Phase Designation	Original Baseline[b]			Phase 1 Recirculation									Phase 1 Recirculation		
	Sample ID	106MW1S-BL-091917			106MW1S-P1R-100417			106MW1S-P1R-100617			106MW1S-P1R-100617-FD			106MW1S-P1R-100917		
	Sample Date	9/19/2017			10/4/2017			10/6/2017			10/6/2017			10/9/2017		
	Sample Pupose	REG			REG			REG			FD			REG		
Chemical Class and Analytical Method[a]	**Parameter**	**Result**	**Val Qual**	**LOQ**	**Result**	**Val Qual**	**LOQ**	**Result**	**Val Qual**	**LOQ**	**Result**	**Val Qual**	**LOQ**	**Result**	**Val Qual**	**LOQ**
Microbial Community (cells/mL) QuantArray-Chlor	1,1 DCA Reductase (DCA)	ND	U	5.5	NS	--	--	NS	--	--	NS	--	--	NS	--	--
	1,2 DCA Reductase (DCAR)	ND	U	5.5	NS	--	--	NS	--	--	NS	--	--	NS	--	--
	BAV1 Vinyl Chloride Reductase (BVC)	ND	U	0.5	NS	--	--	NS	--	--	NS	--	--	NS	--	--
	Chloroform Reductase (CFR)	ND	U	5.5	NS	--	--	NS	--	--	NS	--	--	NS	--	--
	Dehalobacter DCM (DCM)	ND	U	5.5	NS	--	--	NS	--	--	NS	--	--	NS	--	--
	Dehalobacter spp. (DHBt)	12900		5.5	NS	--	--	NS	--	--	NS	--	--	NS	--	--
	Dehalobium chlorocoercia (DECO)	2150		5.5	NS	--	--	NS	--	--	NS	--	--	NS	--	--
	Dehalococcoides (DHC)	ND	U	0.5	NS	--	--	NS	--	--	NS	--	--	NS	--	--
	Dehalogenimonas spp. (DHG)	ND	U	5.5	NS	--	--	NS	--	--	NS	--	--	NS	--	--
	Desulfitobacterium spp. (DSB)	122000		5.5	NS	--	--	NS	--	--	NS	--	--	NS	--	--
	Desulfuromonas spp. (DSM)	ND	U	5.5	NS	--	--	NS	--	--	NS	--	--	NS	--	--
	Dichloromethane Dehalogenase (DCMA)	ND	U	5.5	NS	--	--	NS	--	--	NS	--	--	NS	--	--
	Epoxyalkane Transferase (EtnE)	ND	U	5.5	NS	--	--	NS	--	--	NS	--	--	NS	--	--
	Ethene Monooxygenase (EtnC)	ND	U	5.5	NS	--	--	NS	--	--	NS	--	--	NS	--	--
	Methanogens (MGN)	52.4		5.5	NS	--	--	NS	--	--	NS	--	--	NS	--	--
	PCE Reductase (PCE-1)	NS	--	--	NS	--	--	NS	--	--	NS	--	--	NS	--	--
	Phenol Hydroxylase (PHE)	51600		5.5	NS	--	--	NS	--	--	NS	--	--	NS	--	--
	PMMO	87.7		5.5	NS	--	--	NS	--	--	NS	--	--	NS	--	--
	Soluble Methane Monooxygenase (SMMO)	272		5.5	NS	--	--	NS	--	--	NS	--	--	NS	--	--
	Sulfate Reducing Bacteria (APS)	76800		5.5	NS	--	--	NS	--	--	NS	--	--	NS	--	--
	tceA Reductase (TCE)	ND	U	0.5	NS	--	--	NS	--	--	NS	--	--	NS	--	--
	Toluene Dioxygenase (TOD)	1680		5.5	NS	--	--	NS	--	--	NS	--	--	NS	--	--
	Toluene Monooxygenase (RMO)	80500		5.5	NS	--	--	NS	--	--	NS	--	--	NS	--	--
	Toluene Monooxygenase 2 (RDEG)	48100		5.5	NS	--	--	NS	--	--	NS	--	--	NS	--	--
	Total Eubacteria (EBAC)	13300000		5.5	NS	--	--	NS	--	--	NS	--	--	NS	--	--
	trans-1,2-DCE Reductase (TDR)	NS	--	--	NS	--	--	NS	--	--	NS	--	--	NS	--	--
	Trichlorobenzene Dioxygenase (TCBO)	ND	U	5.5	NS	--	--	NS	--	--	NS	--	--	NS	--	--
	Vinyl Chloride Reductase (VCR)	ND	U	0.5	NS	--	--	NS	--	--	NS	--	--	NS	--	--
EDB (µg/L) EPA Method 8011	1,2-DIBROMOETHANE	432	J+	9.66	NS	--	--	NS	--	--	NS	--	--	NS	--	--
Fluorometric (µg/L) Spectrofluorophotometry	FLUORESCEIN	ND	U	0.01	ND	U	0.01	ND	U	0.01	ND	U	0.01	0.151		0.01
Reduced Gases (µg/L) RSKSOP-175	ACETYLENE	ND	U	10	NS	--	--	NS	--	--	NS	--	--	NS	--	--
	ETHANE	2.48	J	4	NS	--	--	NS	--	--	NS	--	--	NS	--	--
	ETHYLENE	6.35		5	NS	--	--	NS	--	--	NS	--	--	NS	--	--
	METHANE	2		2	NS	--	--	NS	--	--	NS	--	--	NS	--	--
	PROPANE	3.34	J	6	NS	--	--	NS	--	--	NS	--	--	NS	--	--
General Chemistry (mg/L) SM2320b, EPA Method 300, EPA Method 353.2, SM4500 PE	ALKALINITY	386		1	NS	--	--	NS	--	--	NS	--	--	NS	--	--
	BROMIDE	0.329		0.125	NS	--	--	NS	--	--	NS	--	--	NS	--	--
	CHLORIDE	32.7		0.33	NS	--	--	NS	--	--	NS	--	--	NS	--	--
	IODIDE	ND	U	0.75	NS	--	--	NS	--	--	NS	--	--	NS	--	--
	NITRATE	NS	--	--	NS	--	--	NS	--	--	NS	--	--	NS	--	--
	NITRITE	NS	--	--	NS	--	--	NS	--	--	NS	--	--	NS	--	--
	NITROGEN, NITRATE-NITRITE	ND	U	0.375	NS	--	--	NS	--	--	NS	--	--	NS	--	--
	O-PHOSPHATE (AS P)	0.0525		0.02	NS	--	--	NS	--	--	NS	--	--	NS	--	--
	SULFATE	3.43		1	NS	--	--	NS	--	--	NS	--	--	NS	--	--
VFAs (mg/L) EPA Method 300m	ACETIC ACID	1.29		1	NS	--	--	NS	--	--	NS	--	--	NS	--	--
	BUTYRIC ACID	ND	U	1	NS	--	--	NS	--	--	NS	--	--	NS	--	--
	FORMIC ACID	ND	U	1	NS	--	--	NS	--	--	NS	--	--	NS	--	--
	LACTIC ACID	0.62	J	1	NS	--	--	NS	--	--	NS	--	--	NS	--	--
	PROPIONIC ACID	ND	U	1	NS	--	--	NS	--	--	NS	--	--	NS	--	--
	PYRUVIC ACID	ND	U	1	NS	--	--	NS	--	--	NS	--	--	NS	--	--
	VALERIC ACID	ND	U	1	NS	--	--	NS	--	--	NS	--	--	NS	--	--

Table 13
Groundwater Analytical Results for KAFB-106MW1-S

	Phase Designation	Original Baseline[b]			Phase 1 Recirculation									Phase 1 Recirculation		
	Sample ID	106MW1S-BL-091917			106MW1S-P1R-100417			106MW1S-P1R-100617			106MW1S-P1R-100617-FD			106MW1S-P1R-100917		
	Sample Date	9/19/2017			10/4/2017			10/6/2017			10/6/2017			10/9/2017		
	Sample Pupose	REG			REG			REG			FD			REG		
Chemical Class and Analytical Method[a]	Parameter	Result	Val Qual	LOQ	Result	Val Qual	LOQ	Result	Val Qual	LOQ	Result	Val Qual	LOQ	Result	Val Qual	LOQ
Dissolved Metals (mg/L) EPA Method 6010	IRON	1.02		0.06	NS	--	--	NS	--	--	NS	--	--	NS	--	--
	MANGANESE	2.62		0.006	NS	--	--	NS	--	--	NS	--	--	NS	--	--
δ2H (‰) Mass Spectrometry, USGS Reston, VA	DELTA2H	-93.89		-99	-95.45		-99	-96.06		-99	-95.87		-99	-95.69		-99
CSIA EDB δ13C ‰) Kuder et al, 2012	EDB δ	-19.6 ±2‰	--	--	NS	--	--	NS	--	--	NS	--	--	NS	--	--
VOCs (µg/L) EPA Method 8260	1,1,2-TRICHLOROETHANE	ND	UJ	100	NS	--	--	NS	--	--	NS	--	--	NS	--	--
	1,2,4-TRIMETHYLBENZENE	469	J-	100	NS	--	--	NS	--	--	NS	--	--	NS	--	--
	1,2-DIBROMOETHANE	415	J-	100	NS	--	--	NS	--	--	NS	--	--	NS	--	--
	1,2-DICHLOROETHANE	ND	UJ	100	NS	--	--	NS	--	--	NS	--	--	NS	--	--
	1,3,5-TRIMETHYLBENZENE	165	J-	100	NS	--	--	NS	--	--	NS	--	--	NS	--	--
	2-BUTANONE	ND	UJ	1000	NS	--	--	NS	--	--	NS	--	--	NS	--	--
	2-CHLOROTOLUENE	ND	UJ	100	NS	--	--	NS	--	--	NS	--	--	NS	--	--
	2-HEXANONE	523	J-	500	NS	--	--	NS	--	--	NS	--	--	NS	--	--
	4-METHYL-2-PENTANONE	ND	UJ	500	NS	--	--	NS	--	--	NS	--	--	NS	--	--
	ACETONE	2210	J-	1000	NS	--	--	NS	--	--	NS	--	--	NS	--	--
	BENZENE	7320	J-	100	NS	--	--	NS	--	--	NS	--	--	NS	--	--
	CARBON DISULFIDE	ND	UJ	100	NS	--	--	NS	--	--	NS	--	--	NS	--	--
	CHLOROMETHANE	ND	UJ	100	NS	--	--	NS	--	--	NS	--	--	NS	--	--
	DICHLORODIFLUOROMETHANE	ND	UJ	200	NS	--	--	NS	--	--	NS	--	--	NS	--	--
	ETHYLBENZENE	1460	J-	100	NS	--	--	NS	--	--	NS	--	--	NS	--	--
	ISOPROPYLBENZENE	113	J	100	NS	--	--	NS	--	--	NS	--	--	NS	--	--
	METHYL TERT-BUTYL ETHER	ND	UJ	100	NS	--	--	NS	--	--	NS	--	--	NS	--	--
	METHYLENE CHLORIDE	ND	UJ	200	NS	--	--	NS	--	--	NS	--	--	NS	--	--
	NAPHTHALENE	141	J-	100	NS	--	--	NS	--	--	NS	--	--	NS	--	--
	N-BUTYLBENZENE	ND	UJ	100	NS	--	--	NS	--	--	NS	--	--	NS	--	--
	N-PROPYLBENZENE	118	J-	100	NS	--	--	NS	--	--	NS	--	--	NS	--	--
	P-ISOPROPYLTOLUENE	ND	UJ	100	NS	--	--	NS	--	--	NS	--	--	NS	--	--
	SEC-BUTYLBENZENE	ND	UJ	100	NS	--	--	NS	--	--	NS	--	--	NS	--	--
	TERT-BUTYLBENZENE	ND	UJ	100	NS	--	--	NS	--	--	NS	--	--	NS	--	--
	TOLUENE	13200	J-	100	NS	--	--	NS	--	--	NS	--	--	NS	--	--
	TRICHLOROETHENE	ND	UJ	100	NS	--	--	NS	--	--	NS	--	--	NS	--	--
	TRICHLOROFLUOROMETHANE	ND	UJ	200	NS	--	--	NS	--	--	NS	--	--	NS	--	--
	XYLENES	5620	J-	300	NS	--	--	NS	--	--	NS	--	--	NS	--	--

Notes:

a. EPA analytical methods listed are for the most recent sampling event.

b. Samples were collected using replacement QED Bladder Pumps. This well was not sampled using the Geotech pumps.

-- = Not applicable.

δ2H - Delta Deuterium.

0/00 - Per mille.

cells/mL = Cells per milliliter.

EPA = Environmental Protection Agency.

FD = Field duplicate.

ID = Identification.

J = Estimated value, concentration is less than LOQ but greater than laboratory method detection limit (DL).

J+ = Estimated value, concentration is less than LOQ but greater than laboratory method detection limit (DL); biased high.

J- = Estimated value, concentration is less than LOQ but greater than laboratory method detection limit (DL); biased low.

KAFB = Kirtland Air Force Base.

LOQ = Limit of Quantitation

µg/L = Microgram per liter.

mg/L = Milligram per liter.

NA = Not analyzed.

ND = Not detected.

NS = Not sampled.

REG = Regular/parent sample.

U = Analyte was not detected. The reported numerical value is at or below the LOQ.

UJ = Analyte was not detected. The reported value is estimated.

VAL QUAL = Validation qualifier.

VFA - Volatile fatty acid.

VOC = Volatile organic compound.

Table 13
Groundwater Analytical Results for KAFB-106MW1-S

	Phase Designation	Phase 1 Recirculation									Phase 1 Recirculation					
	Sample ID	106MW1S-P1R-101217			106MW1S-P1R-101617			106MW1S-P1R-102017			106MW1S-P1R-102417			106MW1S-P1R-110117		
	Sample Date	10/12/2017			10/16/2017			10/20/2017			10/24/2017			11/1/2017		
	Sample Pupose	REG			REG			REG			REG			REG		
Chemical Class and Analytical Method[a]	**Parameter**	**Result**	**Val Qual**	**LOQ**	**Result**	**Val Qual**	**LOQ**	**Result**	**Val Qual**	**LOQ**	**Result**	**Val Qual**	**LOQ**	**Result**	**Val Qual**	**LOQ**
Microbial Community (cells/mL) QuantArray-Chlor	1,1 DCA Reductase (DCA)	NS	--	--	NS	--	--	NS	--	--	NS	--	--	NS	--	--
	1,2 DCA Reductase (DCAR)	NS	--	--	NS	--	--	NS	--	--	NS	--	--	NS	--	--
	BAV1 Vinyl Chloride Reductase (BVC)	NS	--	--	NS	--	--	NS	--	--	NS	--	--	NS	--	--
	Chloroform Reductase (CFR)	NS	--	--	NS	--	--	NS	--	--	NS	--	--	NS	--	--
	Dehalobacter DCM (DCM)	NS	--	--	NS	--	--	NS	--	--	NS	--	--	NS	--	--
	Dehalobacter spp. (DHBt)	NS	--	--	NS	--	--	NS	--	--	NS	--	--	NS	--	--
	Dehalobium chlorocoercia (DECO)	NS	--	--	NS	--	--	NS	--	--	NS	--	--	NS	--	--
	Dehalococcoides (DHC)	NS	--	--	NS	--	--	NS	--	--	NS	--	--	NS	--	--
	Dehalogenimonas spp. (DHG)	NS	--	--	NS	--	--	NS	--	--	NS	--	--	NS	--	--
	Desulfitobacterium spp. (DSB)	NS	--	--	NS	--	--	NS	--	--	NS	--	--	NS	--	--
	Desulfuromonas spp. (DSM)	NS	--	--	NS	--	--	NS	--	--	NS	--	--	NS	--	--
	Dichloromethane Dehalogenase (DCMA)	NS	--	--	NS	--	--	NS	--	--	NS	--	--	NS	--	--
	Epoxyalkane Transferase (EtnE)	NS	--	--	NS	--	--	NS	--	--	NS	--	--	NS	--	--
	Ethene Monooxygenase (EtnC)	NS	--	--	NS	--	--	NS	--	--	NS	--	--	NS	--	--
	Methanogens (MGN)	NS	--	--	NS	--	--	NS	--	--	NS	--	--	NS	--	--
	PCE Reductase (PCE-1)	NS	--	--	NS	--	--	NS	--	--	NS	--	--	NS	--	--
	Phenol Hydroxylase (PHE)	NS	--	--	NS	--	--	NS	--	--	NS	--	--	NS	--	--
	PMMO	NS	--	--	NS	--	--	NS	--	--	NS	--	--	NS	--	--
	Soluble Methane Monooxygenase (SMMO)	NS	--	--	NS	--	--	NS	--	--	NS	--	--	NS	--	--
	Sulfate Reducing Bacteria (APS)	NS	--	--	NS	--	--	NS	--	--	NS	--	--	NS	--	--
	tceA Reductase (TCE)	NS	--	--	NS	--	--	NS	--	--	NS	--	--	NS	--	--
	Toluene Dioxygenase (TOD)	NS	--	--	NS	--	--	NS	--	--	NS	--	--	NS	--	--
	Toluene Monooxygenase (RMO)	NS	--	--	NS	--	--	NS	--	--	NS	--	--	NS	--	--
	Toluene Monooxygenase 2 (RDEG)	NS	--	--	NS	--	--	NS	--	--	NS	--	--	NS	--	--
	Total Eubacteria (EBAC)	NS	--	--	NS	--	--	NS	--	--	NS	--	--	NS	--	--
	trans-1,2-DCE Reductase (TDR)	NS	--	--	NS	--	--	NS	--	--	NS	--	--	NS	--	--
	Trichlorobenzene Dioxygenase (TCBO)	NS	--	--	NS	--	--	NS	--	--	NS	--	--	NS	--	--
	Vinyl Chloride Reductase (VCR)	NS	--	--	NS	--	--	NS	--	--	NS	--	--	NS	--	--
EDB (µg/L) EPA Method 8011	1,2-DIBROMOETHANE	NS	--	--	NS	--	--	NS	--	--	104		9.67	NS	--	--
Fluorometric (µg/L) Spectrofluorophotometry	FLUORESCEIN	64.884		0.01	33.977		0.01	10.78		0.01	6.306		0.01	6.629		0.01
Reduced Gases (µg/L) RSKSOP-175	ACETYLENE	NS	--	--	NS	--	--	NS	--	--	ND	U	10	NS	--	--
	ETHANE	NS	--	--	NS	--	--	NS	--	--	ND	U	4	NS	--	--
	ETHYLENE	NS	--	--	NS	--	--	NS	--	--	3.07	J	5	NS	--	--
	METHANE	NS	--	--	NS	--	--	NS	--	--	1.01	J	2	NS	--	--
	PROPANE	NS	--	--	NS	--	--	NS	--	--	ND	U	6	NS	--	--
General Chemistry (mg/L) SM2320b, EPA Method 300, EPA Method 353.2, SM4500 PE	ALKALINITY	NS	--	--	NS	--	--	NS	--	--	337		1	NS	--	--
	BROMIDE	NS	--	--	NS	--	--	NS	--	--	0.466		0.125	NS	--	--
	CHLORIDE	NS	--	--	NS	--	--	NS	--	--	39.7		0.33	NS	--	--
	IODIDE	NS	--	--	NS	--	--	NS	--	--	ND	U	0.75	NS	--	--
	NITRATE	NS	--	--	NS	--	--	NS	--	--	NS	--	--	NS	--	--
	NITRITE	NS	--	--	NS	--	--	NS	--	--	NS	--	--	NS	--	--
	NITROGEN, NITRATE-NITRITE	NS	--	--	NS	--	--	NS	--	--	ND	U	0.375	NS	--	--
	O-PHOSPHATE (AS P)	NS	--	--	NS	--	--	NS	--	--	ND	U	0.02	NS	--	--
	SULFATE	NS	--	--	NS	--	--	NS	--	--	19.1		1	NS	--	--
VFAs (mg/L) EPA Method 300m	ACETIC ACID	NS	--	--	NS	--	--	NS	--	--	0.72	J	1	NS	--	--
	BUTYRIC ACID	NS	--	--	NS	--	--	NS	--	--	ND	U	1	NS	--	--
	FORMIC ACID	NS	--	--	NS	--	--	NS	--	--	ND	U	1	NS	--	--
	LACTIC ACID	NS	--	--	NS	--	--	NS	--	--	ND	U	1	NS	--	--
	PROPIONIC ACID	NS	--	--	NS	--	--	NS	--	--	ND	U	1	NS	--	--
	PYRUVIC ACID	NS	--	--	NS	--	--	NS	--	--	ND	U	1	NS	--	--
	VALERIC ACID	NS	--	--	NS	--	--	NS	--	--	ND	U	1	NS	--	--

Table 13
Groundwater Analytical Results for KAFB-106MW1-S

	Phase Designation	Phase 1 Recirculation									Phase 1 Recirculation					
	Sample ID	106MW1S-P1R-101217			106MW1S-P1R-101617			106MW1S-P1R-102017			106MW1S-P1R-102417			106MW1S-P1R-110117		
	Sample Date	10/12/2017			10/16/2017			10/20/2017			10/24/2017			11/1/2017		
	Sample Pupose	REG			REG			REG			REG			REG		
Chemical Class and Analytical Method[a]	**Parameter**	**Result**	**Val Qual**	**LOQ**	**Result**	**Val Qual**	**LOQ**	**Result**	**Val Qual**	**LOQ**	**Result**	**Val Qual**	**LOQ**	**Result**	**Val Qual**	**LOQ**
Dissolved Metals (mg/L) EPA Method 6010	IRON	NS	--	--	NS	--	--	NS	--	--	0.497		0.06	NS	--	--
	MANGANESE	NS	--	--	NS	--	--	NS	--	--	2.28		0.006	NS	--	--
δ2H (‰) Mass Spectrometry, USGS Reston, VA	DELTA2H	-31.49		-99	-55.24		-99	-83.98		-99	-89.2		-99	-88.68		-99
CSIA EDB δ13C ‰) Kuder et al, 2012	EDB δ	NS	--	--	NS	--	--	NS	--	--	NS	--	--	NS	--	--
VOCs (µg/L) EPA Method 8260	1,1,2-TRICHLOROETHANE	NS	--	--	NS	--	--	NS	--	--	ND	U	50	NS	--	--
	1,2,4-TRIMETHYLBENZENE	NS	--	--	NS	--	--	NS	--	--	386		50	NS	--	--
	1,2-DIBROMOETHANE	NS	--	--	NS	--	--	NS	--	--	130		50	NS	--	--
	1,2-DICHLOROETHANE	NS	--	--	NS	--	--	NS	--	--	ND	U	50	NS	--	--
	1,3,5-TRIMETHYLBENZENE	NS	--	--	NS	--	--	NS	--	--	129		50	NS	--	--
	2-BUTANONE	NS	--	--	NS	--	--	NS	--	--	ND	U	500	NS	--	--
	2-CHLOROTOLUENE	NS	--	--	NS	--	--	NS	--	--	ND	U	50	NS	--	--
	2-HEXANONE	NS	--	--	NS	--	--	NS	--	--	243	J	250	NS	--	--
	4-METHYL-2-PENTANONE	NS	--	--	NS	--	--	NS	--	--	166	J	250	NS	--	--
	ACETONE	NS	--	--	NS	--	--	NS	--	--	ND	U	500	NS	--	--
	BENZENE	NS	--	--	NS	--	--	NS	--	--	3630		50	NS	--	--
	CARBON DISULFIDE	NS	--	--	NS	--	--	NS	--	--	ND	U	50	NS	--	--
	CHLOROMETHANE	NS	--	--	NS	--	--	NS	--	--	ND	U	50	NS	--	--
	DICHLORODIFLUOROMETHANE	NS	--	--	NS	--	--	NS	--	--	ND	U	100	NS	--	--
	ETHYLBENZENE	NS	--	--	NS	--	--	NS	--	--	1130		50	NS	--	--
	ISOPROPYLBENZENE	NS	--	--	NS	--	--	NS	--	--	93.2	J	50	NS	--	--
	METHYL TERT-BUTYL ETHER	NS	--	--	NS	--	--	NS	--	--	ND	U	50	NS	--	--
	METHYLENE CHLORIDE	NS	--	--	NS	--	--	NS	--	--	ND	U	100	NS	--	--
	NAPHTHALENE	NS	--	--	NS	--	--	NS	--	--	130		50	NS	--	--
	N-BUTYLBENZENE	NS	--	--	NS	--	--	NS	--	--	ND	U	50	NS	--	--
	N-PROPYLBENZENE	NS	--	--	NS	--	--	NS	--	--	92.9	J	50	NS	--	--
	P-ISOPROPYLTOLUENE	NS	--	--	NS	--	--	NS	--	--	ND	U	50	NS	--	--
	SEC-BUTYLBENZENE	NS	--	--	NS	--	--	NS	--	--	ND	U	50	NS	--	--
	TERT-BUTYLBENZENE	NS	--	--	NS	--	--	NS	--	--	ND	U	50	NS	--	--
	TOLUENE	NS	--	--	NS	--	--	NS	--	--	9330		50	NS	--	--
	TRICHLOROETHENE	NS	--	--	NS	--	--	NS	--	--	ND	U	50	NS	--	--
	TRICHLOROFLUOROMETHANE	NS	--	--	NS	--	--	NS	--	--	ND	U	100	NS	--	--
	XYLENES	NS	--	--	NS	--	--	NS	--	--	4380		150	NS	--	--

Notes:

a. EPA analytical methods listed are for the most recent sampling event.

b. Samples were collected using replacement QED Bladder Pumps. This well was not sampled using the Geotech pumps.

-- = Not applicable.

δ2H - Delta Deuterium.

0/00 - Per mille.

cells/mL = Cells per milliliter.

EPA = Environmental Protection Agency.

FD = Field duplicate.

ID = Identification.

J = Estimated value, concentration is less than LOQ but greater than laboratory method detection limit (DL).

J+ = Estimated value, concentration is less than LOQ but greater than laboratory method detection limit (DL); biased high.

J- = Estimated value, concentration is less than LOQ but greater than laboratory method detection limit (DL); biased low.

KAFB = Kirtland Air Force Base.

LOQ = Limit of Quantitation

µg/L = Microgram per liter.

mg/L = Milligram per liter.

NA = Not analyzed.

ND = Not detected.

NS = Not sampled.

REG = Regular/parent sample.

U = Analyte was not detected. The reported numerical value is at or below the LOQ.

UJ = Analyte was not detected. The reported value is estimated.

VAL QUAL = Validation qualifier.

VFA - Volatile fatty acid.

VOC = Volatile organic compound.

Table 13
Groundwater Analytical Results for KAFB-106MW1-S

	Phase Designation	Phase 1 Passive						Phase 2 Recirculation								
	Sample ID	106MW1S-P1P-111517			106MW1S-P1P-112817			106MW1S-P2R-010918			106MW1S-P2R-011818			106MW1S-P2R-012418		
	Sample Date	11/15/2017			11/28/2017			1/9/2018			1/18/2018			1/24/2018		
	Sample Pupose	REG			REG			REG			REG			REG		
Chemical Class and Analytical Method[a]	**Parameter**	**Result**	**Val Qual**	**LOQ**	**Result**	**Val Qual**	**LOQ**	**Result**	**Val Qual**	**LOQ**	**Result**	**Val Qual**	**LOQ**	**Result**	**Val Qual**	**LOQ**
Microbial Community (cells/mL) QuantArray-Chlor	1,1 DCA Reductase (DCA)	NS	--	--	ND	U	4.8	NS	--	--	NS	--	--	ND	U	5.3
	1,2 DCA Reductase (DCAR)	NS	--	--	ND	U	4.8	NS	--	--	NS	--	--	ND	U	5.3
	BAV1 Vinyl Chloride Reductase (BVC)	NS	--	--	ND	U	0.5	NS	--	--	NS	--	--	ND	U	0.5
	Chloroform Reductase (CFR)	NS	--	--	ND	U	4.8	NS	--	--	NS	--	--	ND	U	5.3
	Dehalobacter DCM (DCM)	NS	--	--	ND	U	4.8	NS	--	--	NS	--	--	ND	U	5.3
	Dehalobacter spp. (DHBt)	NS	--	--	252000		4.8	NS	--	--	NS	--	--	61700		5.3
	Dehalobium chlorocoercia (DECO)	NS	--	--	11200		4.8	NS	--	--	NS	--	--	12400		5.3
	Dehalococcoides (DHC)	NS	--	--	ND	U	0.5	NS	--	--	NS	--	--	ND	U	0.5
	Dehalogenimonas spp. (DHG)	NS	--	--	ND	U	4.8	NS	--	--	NS	--	--	345		5.3
	Desulfitobacterium spp. (DSB)	NS	--	--	1400000		4.8	NS	--	--	NS	--	--	82500		5.3
	Desulfuromonas spp. (DSM)	NS	--	--	ND	U	4.8	NS	--	--	NS	--	--	ND	U	5.3
	Dichloromethane Dehalogenase (DCMA)	NS	--	--	ND	U	4.8	NS	--	--	NS	--	--	ND	U	5.3
	Epoxyalkane Transferase (EtnE)	NS	--	--	71.4		4.8	NS	--	--	NS	--	--	ND	U	5.3
	Ethene Monooxygenase (EtnC)	NS	--	--	ND	U	4.8	NS	--	--	NS	--	--	ND	U	5.3
	Methanogens (MGN)	NS	--	--	22100		4.8	NS	--	--	NS	--	--	6.1		5.3
	PCE Reductase (PCE-1)	NS	--	--	NS	--	--	NS	--	--	NS	--	--	0.5	J	5.3
	Phenol Hydroxylase (PHE)	NS	--	--	18400		4.8	NS	--	--	NS	--	--	34600		5.3
	PMMO	NS	--	--	ND	U	4.8	NS	--	--	NS	--	--	NS	--	--
	Soluble Methane Monooxygenase (SMMO)	NS	--	--	2640		4.8	NS	--	--	NS	--	--	290		5.3
	Sulfate Reducing Bacteria (APS)	NS	--	--	192000		4.8	NS	--	--	NS	--	--	161000		5.3
	tceA Reductase (TCE)	NS	--	--	ND	U	0.5	NS	--	--	NS	--	--	ND	U	0.5
	Toluene Dioxygenase (TOD)	NS	--	--	ND	U	4.8	NS	--	--	NS	--	--	ND	U	5.3
	Toluene Monooxygenase (RMO)	NS	--	--	175000		4.8	NS	--	--	NS	--	--	34400		5.3
	Toluene Monooxygenase 2 (RDEG)	NS	--	--	61400		4.8	NS	--	--	NS	--	--	20100		5.3
	Total Eubacteria (EBAC)	NS	--	--	14200000		4.8	NS	--	--	NS	--	--	4230000		5.3
	trans-1,2-DCE Reductase (TDR)	NS	--	--	NS	--	--	NS	--	--	NS	--	--	ND	U	5.3
	Trichlorobenzene Dioxygenase (TCBO)	NS	--	--	ND	U	4.8	NS	--	--	NS	--	--	ND	U	5.3
	Vinyl Chloride Reductase (VCR)	NS	--	--	ND	U	0.5	NS	--	--	NS	--	--	ND	U	
EDB (µg/L) EPA Method 8011	1,2-DIBROMOETHANE	108		3.78	47.8		3.81	63.5		1.89	104	J	1.9	66.4		1.89
Fluorometric (µg/L) Spectrofluorophotometry	FLUORESCEIN	7.462		0.01	4.108		0.01	NS	--	--	NS	--	--	NS	--	--
Reduced Gases (µg/L) RSKSOP-175	ACETYLENE	ND	U	10	ND	U	10	ND	U	10	ND	U	10	ND	U	10
	ETHANE	ND	U	4	ND	U	4	1.64	J	4	1.63	J	4	2.22	J	4
	ETHYLENE	ND	U	5	ND	U	5	6.25		5	6.2		5	7.84		5
	METHANE	ND	U	2	ND	U	2	1.92	J	2	2.13		2	3.46		2
	PROPANE	ND	U	6	ND	U	6	1.86	J	6	2.07	J	6	2.68	J	6
General Chemistry (mg/L) SM2320b, EPA Method 300, EPA Method 353.2, SM4500 PE	ALKALINITY	327		1	319		1	308		1	303		1	368		1
	BROMIDE	0.571		0.125	0.631		0.25	0.469	J	0.25	0.294		0.125	0.49	J	0.25
	CHLORIDE	44		0.33	45.2		0.66	49.4		0.66	21.9		0.33	45.8		0.66
	IODIDE	ND	U	0.75	ND	U	0.75	8.7		0.75	9.7		0.75	11		0.75
	NITRATE	NS	--	--	NS	--	--	NS	--	--	NS	--	--	NS	--	--
	NITRITE	NS	--	--	NS	--	--	NS	--	--	NS	--	--	NS	--	--
	NITROGEN, NITRATE-NITRITE	ND	U	0.375	ND	U	0.375	ND	U	0.375	ND	U	0.375	ND	U	0.375
	O-PHOSPHATE (AS P)	0.0171	J	0.02	ND	U	0.02	ND	U	0.02	0.0154	J	0.02	ND	U	0.02
	SULFATE	3.35		1	0.804	J	2	1.44	J	2	5.56	J+	1	0.698	J	2
VFAs (mg/L) EPA Method 300m	ACETIC ACID	3.23		1	3.77		1	60.4		1	67.5		1	91.5		1
	BUTYRIC ACID	ND	U	1	ND	U	1	ND	U	1	0.51	J	1	1.21		1
	FORMIC ACID	ND	U	1	ND	U	1	ND	U	1	ND	U	1	ND	U	1
	LACTIC ACID	ND	U	1	ND	U	1	1.61		1	1.35		1	1.93		1
	PROPIONIC ACID	ND	U	1	ND	U	1	25.5		1	19.4		1	26		1
	PYRUVIC ACID	ND	U	1	ND	U	1	ND	U	1	ND	U	1	ND	U	1
	VALERIC ACID	ND	U	1	ND	U	1	ND	U	1	ND	U	1	ND	U	1

Table 13
Groundwater Analytical Results for KAFB-106MW1-S

	Phase Designation	Phase 1 Passive						Phase 2 Recirculation								
	Sample ID	106MW1S-P1P-111517			106MW1S-P1P-112817			106MW1S-P2R-010918			106MW1S-P2R-011818			106MW1S-P2R-012418		
	Sample Date	11/15/2017			11/28/2017			1/9/2018			1/18/2018			1/24/2018		
	Sample Pupose	REG			REG			REG			REG			REG		
Chemical Class and Analytical Method[a]	**Parameter**	**Result**	**Val Qual**	**LOQ**	**Result**	**Val Qual**	**LOQ**	**Result**	**Val Qual**	**LOQ**	**Result**	**Val Qual**	**LOQ**	**Result**	**Val Qual**	**LOQ**
Dissolved Metals (mg/L) EPA Method 6010	IRON	1.38		0.06	2.72		0.06	1.62		0.06	0.186		0.06	2.24	J-	0.06
	MANGANESE	2.68		0.006	2.87		0.006	3.22		0.006	0.413		0.006	3.48	J-	0.006
δ2H (‰) Mass Spectrometry, USGS Reston, VA	DELTA2H	-88.7		-99	-89.43		-99	NS	--	--	NS	--	--	NS	--	--
CSIA EDB δ13C ‰) Kuder et al, 2012	EDB δ	NS	--	--	-18.2 ±2‰	--	--	NS	--	--	NS	--	--	-11.7 ±2‰	--	--
VOCs (µg/L) EPA Method 8260	1,1,2-TRICHLOROETHANE	ND	U	50	ND	U	100	ND	U	25	ND	U	50	ND	U	50
	1,2,4-TRIMETHYLBENZENE	305		50	362		100	441		25	305		50	416		50
	1,2-DIBROMOETHANE	115		50	53.6	J	100	78.7		25	59.7	J	50	56.5	J	50
	1,2-DICHLOROETHANE	ND	U	50	ND	U	100	ND	U	25	ND	U	50	ND	U	50
	1,3,5-TRIMETHYLBENZENE	114		50	139	J	100	144		25	106		50	136		50
	2-BUTANONE	ND	U	500	ND	U	1000	ND	U	250	ND	U	500	ND	U	500
	2-CHLOROTOLUENE	ND	U	50	ND	U	100	ND	U	25	ND	U	50	ND	U	50
	2-HEXANONE	202	J	250	ND	U	500	145	J	125	129	J	250	ND	U	250
	4-METHYL-2-PENTANONE	138	J	250	ND	U	500	102	J	125	ND	U	250	ND	U	250
	ACETONE	305	J	500	ND	U	1000	326	J	250	585	J	500	292	J	500
	BENZENE	4720		50	3800		100	3470		25	3530		50	3490		50
	CARBON DISULFIDE	ND	U	50	ND	U	100	ND	U	25	ND	U	50	ND	U	50
	CHLOROMETHANE	ND	U	50	ND	U	100	ND	U	25	ND	U	50	ND	U	50
	DICHLORODIFLUOROMETHANE	ND	U	100	ND	U	200	ND	U	50	ND	U	100	ND	U	100
	ETHYLBENZENE	1120		50	1100		100	1150		25	974		50	1110		50
	ISOPROPYLBENZENE	84.4	J	50	92.6	J	100	95.7		25	85	J	50	89.5	J	50
	METHYL TERT-BUTYL ETHER	ND	U	50	ND	U	100	ND	U	25	ND	U	50	ND	U	50
	METHYLENE CHLORIDE	ND	U	100	ND	U	200	ND	U	50	ND	U	100	ND	U	100
	NAPHTHALENE	139		50	115	J	100	135		25	136		50	102		50
	N-BUTYLBENZENE	ND	U	50	ND	U	100	22.3	J	25	ND	U	50	ND	U	50
	N-PROPYLBENZENE	88.4	J	50	95.4	J	100	109		25	97.8	J	50	103		50
	P-ISOPROPYLTOLUENE	ND	U	50	ND	U	100	38.2	J	25	41.8	J	50	ND	U	50
	SEC-BUTYLBENZENE	ND	U	50	ND	U	100	18.6	J	25	ND	U	50	ND	U	50
	TERT-BUTYLBENZENE	ND	U	50	ND	U	100	ND	U	25	ND	U	50	ND	U	50
	TOLUENE	11700		50	11100		100	8310		25	8480		50	9110		50
	TRICHLOROETHENE	ND	U	50	ND	U	100	ND	U	25	ND	U	50	ND	U	50
	TRICHLOROFLUOROMETHANE	ND	U	100	ND	U	200	ND	U	50	ND	U	100	ND	U	100
	XYLENES	3910		150	4060		300	3380		75	3250		150	3710		150

Notes:

a. EPA analytical methods listed are for the most recent sampling event.

b. Samples were collected using replacement QED Bladder Pumps. This well was not sampled using the Geotech pumps.

-- = Not applicable.

δ2H - Delta Deuterium.

0/00 - Per mille.

cells/mL = Cells per milliliter.

EPA = Environmental Protection Agency.

FD = Field duplicate.

ID = Identification.

J = Estimated value, concentration is less than LOQ but greater than laboratory method detection limit (DL).

J+ = Estimated value, concentration is less than LOQ but greater than laboratory method detection limit (DL); biased high.

J- = Estimated value, concentration is less than LOQ but greater than laboratory method detection limit (DL); biased low.

KAFB = Kirtland Air Force Base.

LOQ = Limit of Quantitation

µg/L = Microgram per liter.

mg/L = Milligram per liter.

NA = Not analyzed.

ND = Not detected.

NS = Not sampled.

REG = Regular/parent sample.

U = Analyte was not detected. The reported numerical value is at or below the LOQ.

UJ = Analyte was not detected. The reported value is estimated.

VAL QUAL = Validation qualifier.

VFA - Volatile fatty acid.

VOC = Volatile organic compound.

Table 13
Groundwater Analytical Results for KAFB-106MW1-S

	Phase Designation	Phase 2 Passive			Phase 2 Passive									Phase 3 Recirculation					
	Sample ID	106MW1S-P2P-030618			106MW1S-P2P-041118			106MW1S-P2P-050818			106MW1S-P2P-061418			106MW1S-P3R-080718			106MW1S-P3R-081518		
	Sample Date	3/6/2018			4/11/2018			5/8/2018			6/14/2018			8/7/2018			8/15/2018		
	Sample Pupose	REG			REG			REG			REG			REG			REG		
Chemical Class and Analytical Method[a]	**Parameter**	**Result**	**Val Qual**	**LOQ**	**Result**	**Val Qual**	**LOQ**	**Result**	**Val Qual**	**LOQ**	**Result**	**Val Qual**	**LOQ**	**Result**	**Val Qual**	**LOQ**	**Result**	**Val Qual**	**LOQ**
Microbial Community (cells/mL) QuantArray-Chlor	1,1 DCA Reductase (DCA)	NS	--	--	NS	--	--	ND	U	6.3	NS	--	--	NS	--	--	NS	--	--
	1,2 DCA Reductase (DCAR)	NS	--	--	NS	--	--	ND	U	6.3	NS	--	--	NS	--	--	NS	--	--
	BAV1 Vinyl Chloride Reductase (BVC)	NS	--	--	NS	--	--	ND	U	0.6	NS	--	--	NS	--	--	NS	--	--
	Chloroform Reductase (CFR)	NS	--	--	NS	--	--	ND	U	6.3	NS	--	--	NS	--	--	NS	--	--
	Dehalobacter DCM (DCM)	NS	--	--	NS	--	--	6950		6.3	NS	--	--	NS	--	--	NS	--	--
	Dehalobacter spp. (DHBt)	NS	--	--	NS	--	--	70500		6.3	NS	--	--	NS	--	--	NS	--	--
	Dehalobium chlorocoercia (DECO)	NS	--	--	NS	--	--	5300		6.3	NS	--	--	NS	--	--	NS	--	--
	Dehalococcoides (DHC)	NS	--	--	NS	--	--	ND	U	0.6	NS	--	--	NS	--	--	NS	--	--
	Dehalogenimonas spp. (DHG)	NS	--	--	NS	--	--	276		6.3	NS	--	--	NS	--	--	NS	--	--
	Desulfitobacterium spp. (DSB)	NS	--	--	NS	--	--	20700		6.3	NS	--	--	NS	--	--	NS	--	--
	Desulfuromonas spp. (DSM)	NS	--	--	NS	--	--	50.6		6.3	NS	--	--	NS	--	--	NS	--	--
	Dichloromethane Dehalogenase (DCMA)	NS	--	--	NS	--	--	ND	U	6.3	NS	--	--	NS	--	--	NS	--	--
	Epoxyalkane Transferase (EtnE)	NS	--	--	NS	--	--	ND	U	6.3	NS	--	--	NS	--	--	NS	--	--
	Ethene Monooxygenase (EtnC)	NS	--	--	NS	--	--	ND	U	6.3	NS	--	--	NS	--	--	NS	--	--
	Methanogens (MGN)	NS	--	--	NS	--	--	189		6.3	NS	--	--	NS	--	--	NS	--	--
	PCE Reductase (PCE-1)	NS	--	--	NS	--	--	0.1	J	6.3	NS	--	--	NS	--	--	NS	--	--
	Phenol Hydroxylase (PHE)	NS	--	--	NS	--	--	25000		6.3	NS	--	--	NS	--	--	NS	--	--
	PMMO	NS	--	--	NS	--	--	NS	--	--	NS	--	--	NS	--	--	NS	--	--
	Soluble Methane Monooxygenase (SMMO)	NS	--	--	NS	--	--	676		6.3	NS	--	--	NS	--	--	NS	--	--
	Sulfate Reducing Bacteria (APS)	NS	--	--	NS	--	--	16800		6.3	NS	--	--	NS	--	--	NS	--	--
	tceA Reductase (TCE)	NS	--	--	NS	--	--	ND	U	0.6	NS	--	--	NS	--	--	NS	--	--
	Toluene Dioxygenase (TOD)	NS	--	--	NS	--	--	ND	U	6.3	NS	--	--	NS	--	--	NS	--	--
	Toluene Monooxygenase (RMO)	NS	--	--	NS	--	--	44300		6.3	NS	--	--	NS	--	--	NS	--	--
	Toluene Monooxygenase 2 (RDEG)	NS	--	--	NS	--	--	16100		6.3	NS	--	--	NS	--	--	NS	--	--
	Total Eubacteria (EBAC)	NS	--	--	NS	--	--	6470000		6.3	NS	--	--	NS	--	--	NS	--	--
	trans-1,2-DCE Reductase (TDR)	NS	--	--	NS	--	--	ND	U	6.3	NS	--	--	NS	--	--	NS	--	--
	Trichlorobenzene Dioxygenase (TCBO)	NS	--	--	NS	--	--	304		6.3	NS	--	--	NS	--	--	NS	--	--
	Vinyl Chloride Reductase (VCR)	NS	--	--	NS	--	--	ND	U		NS	--	--	NS	--	--	NS	--	--
EDB (µg/L) EPA Method 8011	1,2-DIBROMOETHANE	92.5	J+	9.49	85.5	J	1.92	24.7		0.958	12.2		0.474	NA	--	--	11		0.03
Fluorometric (µg/L) Spectrofluorophotometry	FLUORESCEIN	NS	--	--	NS	--	--	NS	--	--	NS	--	--	NS	--	--	NS	--	--
Reduced Gases (µg/L) RSKSOP-175	ACETYLENE	ND	U	10	ND	U	10	ND	U	10	ND	UJ	10	ND	U	10	ND	U	10
	ETHANE	3.85	J	4	4.7		4	5.65		4	6.3	J	4	4.7		4	4.5		4
	ETHYLENE	11.57		5	18.57		5	14.46		5	13.4	J	5	12.4		5	11.5		5
	METHANE	19.3		2	25.4		2	25.37		2	24.7	J	2	17.9		2	24		2
	PROPANE	5.39	J	6	8.1		6	12.07		6	8.9	J	6	7.1		6	6.7		6
General Chemistry (mg/L) SM2320b, EPA Method 300, EPA Method 353.2, SM4500 PE	ALKALINITY	423		1	441		1	454		1	494	J-	1	NA	--	--	410		5
	BROMIDE	0.532	J	0.625	0.659		0.25	0.522	J-	0.625	0.457	J	0.625	NA	--	--	0.89		0.5
	CHLORIDE	48.4		1.65	50.8		0.66	50		1.65	50.6		1.65	NA	--	--	53		0.5
	IODIDE	14		0.75	14		0.75	16		0.75	13		0.75	15		0.75	6.3		0.75
	NITRATE	NS	--	--	ND	U	0.2	ND	U	0.5	ND	U	0.5	NA	--	--	NS	--	--
	NITRITE	NS	--	--	ND	U	0.2	ND	U	0.5	ND	U	0.5	NA	--	--	NS	--	--
	NITROGEN, NITRATE-NITRITE	ND	U	0.375	NS	--	--	NS	--	--	NS	--	--	NA	--	--	ND	U	0.05
	O-PHOSPHATE (AS P)	ND	U	0.02	ND	U	0.02	ND	U	0.02	ND	U	0.02	NA	--	--	ND	U	0.15
	SULFATE	ND	U	5	ND	U	2	ND	U	5	ND	U	5	NA	--	--	0.5	J	1
VFAs (mg/L) EPA Method 300m	ACETIC ACID	71.6		10	81.3		20	90.3		20	83.3	J	10	85.5		10	98.2		10
	BUTYRIC ACID	1.2		1	ND	U	1	ND	U	1	ND	UJ	10	ND	U	1	ND	U	1
	FORMIC ACID	ND	U	1	2.4		1	0.2	J	1	ND	UJ	10	4.7	J	10	0.8	J	10
	LACTIC ACID	1		1	1.06		1	ND	U	1	ND	UJ	10	ND	U	1	ND	U	1
	PROPIONIC ACID	22.1		1	16.3		20	12.3		1	ND	UJ	10	ND	U	1	15.2		10
	PYRUVIC ACID	ND	U	1	ND	U	1	ND	U	1	ND	UJ	10	ND	U	1	ND	U	1
	VALERIC ACID	ND	U	1	ND	U	1	ND	U	1	ND	UJ	10	ND	U	1	ND	U	1

Table 13
Groundwater Analytical Results for KAFB-106MW1-S

	Phase Designation	Phase 2 Passive			Phase 2 Passive									Phase 3 Recirculation					
	Sample ID	106MW1S-P2P-030618			106MW1S-P2P-041118			106MW1S-P2P-050818			106MW1S-P2P-061418			106MW1S-P3R-080718			106MW1S-P3R-081518		
	Sample Date	3/6/2018			4/11/2018			5/8/2018			6/14/2018			8/7/2018			8/15/2018		
	Sample Pupose	REG			REG			REG			REG			REG			REG		
Chemical Class and Analytical Method[a]	**Parameter**	**Result**	**Val Qual**	**LOQ**	**Result**	**Val Qual**	**LOQ**	**Result**	**Val Qual**	**LOQ**	**Result**	**Val Qual**	**LOQ**	**Result**	**Val Qual**	**LOQ**	**Result**	**Val Qual**	**LOQ**
Dissolved Metals (mg/L) EPA Method 6010	IRON	5.9		0.06	5.91	J-	0.06	8.18		0.06	8.07		0.06	NA	--	--	5		0.05
	MANGANESE	4.84		0.006	5.35	J+	0.006	5.96		0.006	5.73		0.006	NA	--	--	5.9		0.003
δ2H (‰) Mass Spectrometry, USGS Reston, VA	DELTA2H	NS	--	--	NS	--	--	NS	--	--	NS	--	--	NS	--	--	NS	--	--
CSIA EDB δ13C ‰) Kuder et al, 2012	EDB δ	NS	--	--	NS	--	--	-9.6 ±1‰	--	--	NS	--	--	NS	--	--	NS	--	--
VOCs (µg/L) EPA Method 8260	1,1,2-TRICHLOROETHANE	ND	U	100	ND	U	125	ND	U	100	ND	U	100	NA	--	--	ND	U	50
	1,2,4-TRIMETHYLBENZENE	419		100	426		125	470		100	404		100	NA	--	--	470		100
	1,2-DIBROMOETHANE	128	J	100	62.9	J	125	ND	U	100	ND	U	100	NA	--	--	ND	U	100
	1,2-DICHLOROETHANE	ND	U	100	ND	U	125	ND	U	100	ND	U	100	NA	--	--	ND	U	100
	1,3,5-TRIMETHYLBENZENE	141	J	100	162	J	125	159	J	100	143	J	100	NA	--	--	160		50
	2-BUTANONE	ND	U	1000	ND	U	1250	ND	U	1000	ND	U	1000	NA	--	--	ND	U	1000
	2-CHLOROTOLUENE	ND	U	100	ND	U	125	ND	U	100	ND	U	100	NA	--	--	ND	U	50
	2-HEXANONE	ND	U	500	ND	U	625	ND	U	500	ND	U	500	NA	--	--	ND	U	500
	4-METHYL-2-PENTANONE	ND	U	500	ND	U	625	ND	U	500	ND	U	500	NA	--	--	ND	U	500
	ACETONE	ND	U	1000	ND	U	1250	ND	U	1000	ND	U	1000	NA	--	--	ND	U	1000
	BENZENE	8100		100	8920		125	6100		100	4190		100	NA	--	--	3400		100
	CARBON DISULFIDE	ND	U	100	ND	U	125	ND	U	100	ND	U	100	NA	--	--	ND	U	200
	CHLOROMETHANE	ND	U	100	ND	U	125	ND	U	100	ND	U	100	NA	--	--	ND	U	100
	DICHLORODIFLUOROMETHANE	ND	U	200	ND	U	250	ND	U	200	ND	U	200	NA	--	--	ND	U	100
	ETHYLBENZENE	1360		100	1360		125	1560		100	1300		100	NA	--	--	1200		100
	ISOPROPYLBENZENE	87.6	J	100	114	J	125	113	J	100	108	J	100	NA	--	--	130		100
	METHYL TERT-BUTYL ETHER	ND	U	100	ND	U	125	ND	U	100	ND	U	100	NA	--	--	ND	U	50
	METHYLENE CHLORIDE	ND	U	200	ND	U	250	ND	U	200	ND	U	200	NA	--	--	ND	U	500
	NAPHTHALENE	122	J	100	147	J	125	153	J	100	139	J	100	NA	--	--	ND	U	500
	N-BUTYLBENZENE	ND	U	100	ND	U	125	ND	U	100	ND	U	100	NA	--	--	ND	U	100
	N-PROPYLBENZENE	109	J	100	116	J	125	118	J	100	101	J	100	NA	--	--	120		100
	P-ISOPROPYLTOLUENE	ND	U	100	130	J	125	ND	U	100	ND	U	100	NA	--	--	71	J	100
	SEC-BUTYLBENZENE	ND	U	100	ND	U	125	ND	U	100	ND	U	100	NA	--	--	ND	U	100
	TERT-BUTYLBENZENE	ND	U	100	ND	U	125	ND	U	100	ND	U	100	NA	--	--	ND	U	100
	TOLUENE	16000		100	14900		125	16700		100	11000		100	NA	--	--	7800		100
	TRICHLOROETHENE	ND	U	100	ND	U	125	ND	U	100	68	J	100	NA	--	--	ND	U	100
	TRICHLOROFLUOROMETHANE	ND	U	200	ND	U	250	ND	U	200	ND	U	200	NA	--	--	ND	U	100
	XYLENES	4420		300	4260		375	5320		300	4610		300	NA	--	--	4100		50

Notes:

a. EPA analytical methods listed are for the most recent sampling event.

b. Samples were collected using replacement QED Bladder Pumps. This well was not sampled using the Geotech pumps.

-- = Not applicable.

δ2H - Delta Deuterium.

0/00 - Per mille.

cells/mL = Cells per milliliter.

EPA = Environmental Protection Agency.

FD = Field duplicate.

ID = Identification.

J = Estimated value, concentration is less than LOQ but greater than laboratory method detection limit (DL).

J+ = Estimated value, concentration is less than LOQ but greater than laboratory method detection limit (DL); biased high.

J- = Estimated value, concentration is less than LOQ but greater than laboratory method detection limit (DL); biased low.

KAFB = Kirtland Air Force Base.

LOQ = Limit of Quantitation

µg/L = Microgram per liter.

mg/L = Milligram per liter.

NA = Not analyzed.

ND = Not detected.

NS = Not sampled.

REG = Regular/parent sample.

U = Analyte was not detected. The reported numerical value is at or below the LOQ.

UJ = Analyte was not detected. The reported value is estimated.

VAL QUAL = Validation qualifier.

VFA - Volatile fatty acid.

VOC = Volatile organic compound.

Table 13
Groundwater Analytical Results for KAFB-106MW1-S

	Phase Designation	Phase 3 Recirculation						Phase 3 Passive						Phase 3 Passive						Phase 4 Passive		
	Sample ID	106MW1S-P3R-082118			106MW1S-P3R-082818			106MW1S-P3P-091118			106MW1S-P3P-100318			106MW1S-P3P-100318-FD			106MW1S-P3P-111418			106MW1S-P4P-011619		
	Sample Date	8/21/2018			8/28/2018			9/11/2018			10/3/2018			10/3/2018			11/14/2018			1/16/2019		
	Sample Pupose	REG			REG			REG			REG			FD			REG			REG		
Chemical Class and Analytical Method[a]	**Parameter**	**Result**	**Val Qual**	**LOQ**	**Result**	**Val Qual**	**LOQ**	**Result**	**Val Qual**	**LOQ**	**Result**	**Val Qual**	**LOQ**	**Result**	**Val Qual**	**LOQ**	**Result**	**Val Qual**	**LOQ**	**Result**	**Val Qual**	**LOQ**
Microbial Community (cells/mL) QuantArray-Chlor	1,1 DCA Reductase (DCA)	ND	U	4.8	NS	--	--	NS	--	--	NS	--	--	NS	--	--	ND	U	5.2	ND	U	5.1
	1,2 DCA Reductase (DCAR)	ND	U	4.8	NS	--	--	NS	--	--	NS	--	--	NS	--	--	ND	U	5.2	ND	U	5.1
	BAV1 Vinyl Chloride Reductase (BVC)	ND	U	0.5	NS	--	--	NS	--	--	NS	--	--	NS	--	--	ND	U	0.5	ND	U	0.5
	Chloroform Reductase (CFR)	ND	U	4.8	NS	--	--	NS	--	--	NS	--	--	NS	--	--	ND	U	5.2	ND	U	5.1
	Dehalobacter DCM (DCM)	926		4.8	NS	--	--	NS	--	--	NS	--	--	NS	--	--	4430		5.2	983		5.1
	Dehalobacter spp. (DHBt)	212000		4.8	NS	--	--	NS	--	--	NS	--	--	NS	--	--	341000		5.2	330000		5.1
	Dehalobium chlorocoercia (DECO)	21800		4.8	NS	--	--	NS	--	--	NS	--	--	NS	--	--	3830		5.2	6510		5.1
	Dehalococcoides (DHC)	ND	U	0.5	NS	--	--	NS	--	--	NS	--	--	NS	--	--	ND	U	0.5	0.4	J	0.5
	Dehalogenimonas spp. (DHG)	ND	U	4.8	NS	--	--	NS	--	--	NS	--	--	NS	--	--	ND	U	5.2	ND	U	5.1
	Desulfitobacterium spp. (DSB)	71700		4.8	NS	--	--	NS	--	--	NS	--	--	NS	--	--	42200		5.2	74100		5.1
	Desulfuromonas spp. (DSM)	ND	U	4.8	NS	--	--	NS	--	--	NS	--	--	NS	--	--	5.3		5.2	5.2		5.1
	Dichloromethane Dehalogenase (DCMA)	ND	U	4.8	NS	--	--	NS	--	--	NS	--	--	NS	--	--	ND	U	5.2	ND	U	5.1
	Epoxyalkane Transferase (EtnE)	123		4.8	NS	--	--	NS	--	--	NS	--	--	NS	--	--	70.2		5.2	ND	U	5.1
	Ethene Monooxygenase (EtnC)	ND	U	4.8	NS	--	--	NS	--	--	NS	--	--	NS	--	--	ND	U	5.2	ND	U	5.1
	Methanogens (MGN)	1160		4.8	NS	--	--	NS	--	--	NS	--	--	NS	--	--	27100		5.2	6250		5.1
	PCE Reductase (PCE-1)	ND	U	4.8	NS	--	--	NS	--	--	NS	--	--	NS	--	--	ND	U	5.2	ND	U	5.1
	Phenol Hydroxylase (PHE)	17000		4.8	NS	--	--	NS	--	--	NS	--	--	NS	--	--	35600		5.2	9940		5.1
	PMMO	NS	--	--	NS	--	--	NS	--	--	NS	--	--	NS	--	--	NS	--	--	NS	--	--
	Soluble Methane Monooxygenase (SMMO)	412		4.8	NS	--	--	NS	--	--	NS	--	--	NS	--	--	ND	U	5.2	318		5.1
	Sulfate Reducing Bacteria (APS)	177000		4.8	NS	--	--	NS	--	--	NS	--	--	NS	--	--	16200		5.2	37300		5.1
	tceA Reductase (TCE)	ND	U	0.5	NS	--	--	NS	--	--	NS	--	--	NS	--	--	ND	U	0.5	ND	U	0.5
	Toluene Dioxygenase (TOD)	ND	U	4.8	NS	--	--	NS	--	--	NS	--	--	NS	--	--	ND	U	5.2	ND	U	5.1
	Toluene Monooxygenase (RMO)	58600		4.8	NS	--	--	NS	--	--	NS	--	--	NS	--	--	28700		5.2	32800		5.1
	Toluene Monooxygenase 2 (RDEG)	11400		4.8	NS	--	--	NS	--	--	NS	--	--	NS	--	--	15500		5.2	9280		5.1
	Total Eubacteria (EBAC)	12900000		4.8	NS	--	--	NS	--	--	NS	--	--	NS	--	--	9780000		5.2	27900000		5.1
	trans-1,2-DCE Reductase (TDR)	ND	U	4.8	NS	--	--	NS	--	--	NS	--	--	NS	--	--	ND	U	5.2	ND	U	5.1
	Trichlorobenzene Dioxygenase (TCBO)	ND	U	4.8	NS	--	--	NS	--	--	NS	--	--	NS	--	--	ND	U	5.2	ND	U	5.1
	Vinyl Chloride Reductase (VCR)	ND	U		NS	--	--	NS	--	--	NS	--	--	NS	--	--	ND	U		ND	U	0.5
EDB (µg/L) EPA Method 8011	1,2-DIBROMOETHANE	8.4		0.03	8.5		0.03	5.5		0.029	3.2		0.015	3.9		0.03	5.2		0.029	1.1		0.003
Fluorometric (µg/L) Spectrofluorophotometry	FLUORESCEIN	NS	--	--	NS	--	--	NS	--	--	NS	--	--	NS	--	--	NS	--	--	NS	--	--
Reduced Gases (µg/L) RSKSOP-175	ACETYLENE	ND	U	10	ND	U	10	ND	U	10	ND	U	10	ND	U	10	ND	U	10	ND		10
	ETHANE	4.4		4	5.2		4	3.7	J	4	4.9		4	4.7		4	12.2		4	15.7		4
	ETHYLENE	11.2		5	14.3		5	10.9		5	13.4		5	13.3		5	28.3		5	21.6		5
	METHANE	36.2		2	170.2		2	771.1		2	1436.2		2	1384		2	1071.6		2	3114.4		2
	PROPANE	6.6		6	8.2		6	6.8		6	7.2		6	7		6	11.2		6	11.6		6
General Chemistry (mg/L) SM2320b, EPA Method 300, EPA Method 353.2, SM4500 PE	ALKALINITY	420		5	440		5	440		5	460		5	470		5	470		5	470		5
	BROMIDE	0.82		0.5	1		0.5	0.82		0.5	2		0.5	2.1		0.5	1.3		0.5	0.89		0.5
	CHLORIDE	53		0.5	55		0.5	52		0.5	49		0.5	50		0.5	49		0.5	50		0.5
	IODIDE	5.8		0.75	6.2		0.75	6.3		0.75	5		0.75	5.1		0.75	4.2	J+	0.75	3.9		1.5
	NITRATE	NS	--	--	NS	--	--	NS	--	--	NS	--	--	NS	--	--	NS	--	--	NS	--	--
	NITRITE	NS	--	--	NS	--	--	NS	--	--	NS	--	--	NS	--	--	NS	--	--	NS	--	--
	NITROGEN, NITRATE-NITRITE	ND		0.05	ND	U	0.05	ND	U	0.1	ND	U	0.05	ND	U	0.05	0.027	J	0.05	ND		0.05
	O-PHOSPHATE (AS P)	ND		0.15	ND	U	0.15	ND	U	0.15	ND	U	0.15	ND	U	0.15	ND	U	0.75	ND		0.15
	SULFATE	ND		1	ND	U	1	ND	U	1	ND	U	1	ND	U	1	ND	U	1	ND		1
VFAs (mg/L) EPA Method 300m	ACETIC ACID	105		10	105.2		10	90.5		10	105.1		10	106.6		10	111.2		10	115.6		10
	BUTYRIC ACID	ND	U	1	ND	U	1	ND	U	1	ND	U	1	ND	U	1	ND	U	1	ND		1
	FORMIC ACID	0.8	J	10	0.9	J	10	ND	U	1	1.6	J	10	1.5	J	10	0.9	J	1	1.9		10
	LACTIC ACID	ND	U	1	ND	U	1	ND	U	1	ND	U	1	ND	U	1	0.9	J	1	0.9		1
	PROPIONIC ACID	38.5		10	56.1		10	62.1		10	57.7		10	60		10	24.4		10	10.1		10
	PYRUVIC ACID	ND	U	1	ND	U	1	ND	U	1	ND	U	1	ND	U	1	ND	U	1	ND		1
	VALERIC ACID	ND	U	1	ND	U	1	ND	U	1	ND	U	1	ND	U	1	ND	U	1	ND		1

Table 13
Groundwater Analytical Results for KAFB-106MW1-S

	Phase Designation	Phase 3 Recirculation						Phase 3 Passive						Phase 3 Passive						Phase 4 Passive		
	Sample ID	106MW1S-P3R-082118			106MW1S-P3R-082818			106MW1S-P3P-091118			106MW1S-P3P-100318			106MW1S-P3P-100318-FD			106MW1S-P3P-111418			106MW1S-P4P-011619		
	Sample Date	8/21/2018			8/28/2018			9/11/2018			10/3/2018			10/3/2018			11/14/2018			1/16/2019		
	Sample Pupose	REG			REG			REG			REG			FD			REG			REG		
Chemical Class and Analytical Method[a]	Parameter	Result	Val Qual	LOQ	Result	Val Qual	LOQ	Result	Val Qual	LOQ	Result	Val Qual	LOQ	Result	Val Qual	LOQ	Result	Val Qual	LOQ	Result	Val Qual	LOQ
Dissolved Metals (mg/L) EPA Method 6010	IRON	4.9		0.05	5.4		0.05	6.2		0.05	7.3		0.05	7.5		0.05	9.2		0.05	9		0.05
	MANGANESE	6.1		0.003	6		0.003	6.6		0.003	7.2		0.003	7.5		0.003	8		0.003	7.7		0.003
δ2H (‰) Mass Spectrometry, USGS Reston, VA	DELTA2H	NS	--	--	NS	--	--	NS	--	--	NS	--	--	NS	--	--	NS	--	--	NS	--	--
CSIA EDB δ13C ‰) Kuder et al, 2012	EDB δ	-4.1 ±1.5‰	--	--	NS	--	--	-5.6 ±1.5‰	--	--	NS	--	--	NS	--	--	NS	--	--	NS	--	--
VOCs (µg/L) EPA Method 8260	1,1,2-TRICHLOROETHANE	ND	U	50	83	J	50	ND	U	50	ND	U	50	ND	U	50	ND	U	50	ND		50
	1,2,4-TRIMETHYLBENZENE	440		100	670		100	430		100	430		100	420		100	420		100	440		100
	1,2-DIBROMOETHANE	ND	U	100	ND	U	100	ND	U	100	ND	U	100	ND	U	100	ND	U	100	ND		100
	1,2-DICHLOROETHANE	ND	U	20	ND	U	100	ND	U	100	ND	U	100	ND	U	100	ND	U	100	NA	--	--
	1,3,5-TRIMETHYLBENZENE	150		50	380		50	140		50	140		50	140		50	150		50	150		50
	2-BUTANONE	ND	U	1000	ND	U	1000	ND	U	1000	ND	U	1000	ND	U	1000	ND	U	1000	ND		1000
	2-CHLOROTOLUENE	ND	U	50	280		50	ND	U	50	ND	U	50	ND	U	50	ND	U	50	ND		50
	2-HEXANONE	ND	U	500	ND	U	500	ND	U	500	ND	U	500	ND	U	500	ND	U	500	ND		500
	4-METHYL-2-PENTANONE	ND	U	500	ND	U	500	ND	U	500	ND	U	500	ND	U	500	ND	U	500	ND		500
	ACETONE	ND	U	1000	ND	U	1000	ND	U	1000	ND	U	1000	ND	U	1000	ND	U	1000	ND		1000
	BENZENE	3400		100	3700		100	3100		100	4100		100	4000		100	9800		100	8800		100
	CARBON DISULFIDE	ND	U	200	ND	U	200	ND	U	200	ND	U	200	ND	U	200	ND	U	200	ND		200
	CHLOROMETHANE	ND	U	100	ND	U	100	ND	U	100	ND	U	100	ND	U	100	ND	U	100	ND		100
	DICHLORODIFLUOROMETHANE	ND	U	20	ND	U	100	ND	U	100	ND	U	100	ND	U	100	ND	U	100	NA	--	--
	ETHYLBENZENE	1100		20	1500		100	1200		100	1300		100	1300	--	100	1500		100	NA	--	--
	ISOPROPYLBENZENE	120		100	360		100	100		100	110		100	110		100	110		100	110		100
	METHYL TERT-BUTYL ETHER	ND	U	50	ND	U	50	ND	U	50	ND	U	50	ND	U	50	ND	U	50	ND		50
	METHYLENE CHLORIDE	ND	U	500	410	J	500	ND	U	500	ND	U	500	ND	U	500	ND	U	500	ND		500
	NAPHTHALENE	ND	U	500	360	J	500	ND	U	500	ND	U	500	ND	U	500	ND	U	500	ND		500
	N-BUTYLBENZENE	ND	U	100	200		100	ND	U	100	ND	U	100	ND	U	100	ND	U	100	ND		100
	N-PROPYLBENZENE	110		100	340		100	100		100	130		100	120		100	120		100	120		100
	P-ISOPROPYLTOLUENE	51	J	100	260		100	ND	U	100	ND	U	100	ND	U	100	ND	U	100	ND		100
	SEC-BUTYLBENZENE	ND	U	100	220		100	ND	U	100	ND	U	100	ND	U	100	ND	U	100	ND		100
	TERT-BUTYLBENZENE	ND	U	100	220		100	ND	U	100	ND	U	100	ND	U	100	ND	U	100	ND		100
	TOLUENE	8400		100	9900		100	8200		100	11000		100	11000		100	18000		100	23000		200
	TRICHLOROETHENE	ND	U	100	120		100	ND	U	100	ND	U	100	ND	U	100	ND	U	100	ND		100
	TRICHLOROFLUOROMETHANE	ND	U	100	ND	U	100	ND	U	100	ND	U	100	ND	U	100	ND	U	100	ND		100
	XYLENES	4100		50	4900		50	4000		50	4400		50	4200		50	5000		50	4600		50

Notes:

a. EPA analytical methods listed are for the most recent sampling event.

b. Samples were collected using replacement QED Bladder Pumps. This well was not sampled using the Geotech pumps.

-- = Not applicable.

δ2H - Delta Deuterium.

0/00 - Per mille.

cells/mL = Cells per milliliter.

EPA = Environmental Protection Agency.

FD = Field duplicate.

ID = Identification.

J = Estimated value, concentration is less than LOQ but greater than laboratory method detection limit (DL).

J+ = Estimated value, concentration is less than LOQ but greater than laboratory method detection limit (DL); biased high.

J- = Estimated value, concentration is less than LOQ but greater than laboratory method detection limit (DL); biased low.

KAFB = Kirtland Air Force Base.

LOQ = Limit of Quantitation

µg/L = Microgram per liter.

mg/L = Milligram per liter.

NA = Not analyzed.

ND = Not detected.

NS = Not sampled.

REG = Regular/parent sample.

U = Analyte was not detected. The reported numerical value is at or below the LOQ.

UJ = Analyte was not detected. The reported value is estimated.

VAL QUAL = Validation qualifier.

VFA - Volatile fatty acid.

VOC = Volatile organic compound.

Table 14
Groundwater Analytical Results for KAFB-106MW2-I

	Phase Designation	Original Baseline[b]			New Baseline - QED Pumps[c]			Phase 1 Recirculation			Phase 1 Recirculation			Phase 1 Recirculation		
	Sample ID	106MW2I-BL-072417			106MW2I-BL-FD-072417			106MW2I-BL-091917			106MW2I-BL-FD-091917			106MW2I-P1R-100417		
	Sample Date	7/24/2017			7/24/2017			9/19/2017			9/19/2017			10/4/2017		
	Sample Pupose	REG			FD			REG			FD			REG		
Chemical Class and Analytical Method[a]	Parameter	Result	Val Qual	LOQ	Result	Val Qual	LOQ	Result	Val Qual	LOQ	Result	Val Qual	LOQ	Result	Val Qual	LOQ
Microbial Community (cells/mL) QuantArray-Chlor	1,1 DCA Reductase (DCA)	ND	U	5.1	NS	--	--	NS	--	--	NS	--	--	NS	--	--
	1,2 DCA Reductase (DCAR)	ND	U	5.1	NS	--	--	NS	--	--	NS	--	--	NS	--	--
	BAV1 Vinyl Chloride Reductase (BVC)	ND	U	0.5	NS	--	--	NS	--	--	NS	--	--	NS	--	--
	Chloroform Reductase (CFR)	ND	U	5.1	NS	--	--	NS	--	--	NS	--	--	NS	--	--
	Dehalobacter DCM (DCM)	ND	U	5.1	NS	--	--	NS	--	--	NS	--	--	NS	--	--
	Dehalobacter spp. (DHBt)	3830		5.1	NS	--	--	NS	--	--	NS	--	--	NS	--	--
	Dehalobium chlorocoercia (DECO)	144		5.1	NS	--	--	NS	--	--	NS	--	--	NS	--	--
	Dehalococcoides (DHC)	ND	U	0.5	NS	--	--	NS	--	--	NS	--	--	NS	--	--
	Dehalogenimonas spp. (DHG)	ND	U	5.1	NS	--	--	NS	--	--	NS	--	--	NS	--	--
	Desulfitobacterium spp. (DSB)	11000		5.1	NS	--	--	NS	--	--	NS	--	--	NS	--	--
	Desulfuromonas spp. (DSM)	36.8		5.1	NS	--	--	NS	--	--	NS	--	--	NS	--	--
	Dichloromethane Dehalogenase (DCMA)	ND	U	5.1	NS	--	--	NS	--	--	NS	--	--	NS	--	--
	Epoxyalkane Transferase (EtnE)	ND	U	5.1	NS	--	--	NS	--	--	NS	--	--	NS	--	--
	Ethene Monooxygenase (EtnC)	ND	U	5.1	NS	--	--	NS	--	--	NS	--	--	NS	--	--
	Methanogens (MGN)	695		5.1	NS	--	--	NS	--	--	NS	--	--	NS	--	--
	PCE Reductase (PCE-1)	NS	--	--	NS	--	--	NS	--	--	NS	--	--	NS	--	--
	Phenol Hydroxylase (PHE)	10900		5.1	NS	--	--	NS	--	--	NS	--	--	NS	--	--
	PMMO	696		5.1	NS	--	--	NS	--	--	NS	--	--	NS	--	--
	Soluble Methane Monooxygenase (SMMO)	2380		5.1	NS	--	--	NS	--	--	NS	--	--	NS	--	--
	Sulfate Reducing Bacteria (APS)	222		5.1	NS	--	--	NS	--	--	NS	--	--	NS	--	--
	tceA Reductase (TCE)	ND	U	0.5	NS	--	--	NS	--	--	NS	--	--	NS	--	--
	Toluene Dioxygenase (TOD)	206		5.1	NS	--	--	NS	--	--	NS	--	--	NS	--	--
	Toluene Monooxygenase (RMO)	10500		5.1	NS	--	--	NS	--	--	NS	--	--	NS	--	--
	Toluene Monooxygenase 2 (RDEG)	15600		5.1	NS	--	--	NS	--	--	NS	--	--	NS	--	--
	Total Eubacteria (EBAC)	209000		5.1	NS	--	--	NS	--	--	NS	--	--	NS	--	--
	trans-1,2-DCE Reductase (TDR)	NS	--	--	NS	--	--	NS	--	--	NS	--	--	NS	--	--
	Trichlorobenzene Dioxygenase (TCBO)	1390		5.1	NS	--	--	NS	--	--	NS	--	--	NS	--	--
	Vinyl Chloride Reductase (VCR)	ND	U	0.5	NS	--	--	NS	--	--	NS	--	--	NS	--	--
EDB (µg/L) EPA Method 8011	1,2-DIBROMOETHANE	ND	UJ	0.019	ND	UJ	0.0189	0.072		0.0192	0.122		0.0193	NS	--	--
Fluorometric (µg/L) Spectrofluorophotometry	FLUORESCEIN	ND	U	0.01	ND	U	0.01	ND	U	0.01	ND	U	0.01	ND	U	0.01
Reduced Gases (µg/L) RSKSOP-175	ACETYLENE	ND	U	10	ND	U	10	ND	U	10	ND	U	10	NS	--	--
	ETHANE	ND	U	4	ND	U	4	ND	U	4	ND	U	4	NS	--	--
	ETHYLENE	ND	U	5	ND	U	5	ND	U	5	ND	U	5	NS	--	--
	METHANE	ND	U	2	ND	U	2	7.2		2	6.86		2	NS	--	--
	PROPANE	ND	U	6	ND	U	6	ND	U	6	ND	U	6	NS	--	--
General Chemistry (mg/L) SM2320b, EPA Method 300, EPA Method 353.2, SM4500 PE	ALKALINITY	190		1	186		1	194		1	207		1	NS	--	--
	BROMIDE	0.196		0.125	0.193		0.125	0.249		0.125	0.287		0.125	NS	--	--
	CHLORIDE	20.4		0.33	20.4		0.33	31.6		0.33	32.1		0.33	NS	--	--
	IODIDE	ND	U	0.2	ND	U	0.2	ND	U	0.75	ND	U	0.75	NS	--	--
	NITRATE	NS	--	--	NS	--	--	NS	--	--	NS	--	--	NS	--	--
	NITRITE	NS	--	--	NS	--	--	NS	--	--	NS	--	--	NS	--	--
	NITROGEN, NITRATE-NITRITE	ND	U	0.375	ND	U	0.375	ND	U	0.375	ND	U	0.375	NS	--	--
	O-PHOSPHATE (AS P)	ND	U	0.02	0.0125		0.02	ND	U	0.02	ND	U	0.02	NS	--	--
	SULFATE	23		1	23.1		1	19.2		1	19.8		1	NS	--	--
VFAs (mg/L) EPA Method 300m	ACETIC ACID	ND	U	1	ND	U	1	0.59	J	1	0.31	J	1	NS	--	--
	BUTYRIC ACID	ND	U	1	ND	U	1	ND	U	1	ND	U	1	NS	--	--
	FORMIC ACID	ND	U	1	ND	U	1	ND	U	1	ND	U	1	NS	--	--
	LACTIC ACID	ND	U	1	ND	U	1	1.08		1	0.97	J	1	NS	--	--
	PROPIONIC ACID	ND	U	1	ND	U	1	ND	U	1	ND	U	1	NS	--	--
	PYRUVIC ACID	ND	U	1	ND	U	1	ND	U	1	ND	U	1	NS	--	--
	VALERIC ACID	ND	U	1	ND	U	1	ND	U	1	ND	U	1	NS	--	--

Table 14
Groundwater Analytical Results for KAFB-106MW2-I

	Phase Designation	Original Baseline[b]			New Baseline - QED Pumps[c]			Phase 1 Recirculation						Phase 1 Recirculation		
	Sample ID	106MW2I-BL-072417			106MW2I-BL-FD-072417			106MW2I-BL-091917			106MW2I-BL-FD-091917			106MW2I-P1R-100417		
	Sample Date	7/24/2017			7/24/2017			9/19/2017			9/19/2017			10/4/2017		
	Sample Pupose	REG			FD			REG			FD			REG		
Chemical Class and Analytical Method[a]	**Parameter**	**Result**	**Val Qual**	**LOQ**	**Result**	**Val Qual**	**LOQ**	**Result**	**Val Qual**	**LOQ**	**Result**	**Val Qual**	**LOQ**	**Result**	**Val Qual**	**LOQ**
Dissolved Metals (mg/L) EPA Method 6010	IRON	0.053		0.06	0.0514		0.06	0.955		0.06	0.996		0.06	NS	--	--
	MANGANESE	0.154		0.006	0.142		0.006	0.392		0.006	0.405		0.006	NS	--	--
δ2H (0/00) Mass Spectrometry, USGS Reston, VA	DELTA2H	-97.17		-99	-97.04		-99	-96.44		-99	-96.4		-99	-96.22		-99
VOCs (µg/L) EPA Method 8260	1,1,2-TRICHLOROETHANE	ND	U	1	ND	U	1	ND	U	2.5	ND	U	1	NS	--	--
	1,2,4-TRIMETHYLBENZENE	ND	U	1	ND	U	1	ND	U	2.5	ND	U	1	NS	--	--
	1,2-DIBROMOETHANE	ND	U	1	ND	U	1	ND	U	2.5	ND	U	1	NS	--	--
	1,2-DICHLOROETHANE	ND	U	1	ND	U	1	ND	U	2.5	0.78	J	1	NS	--	--
	1,3,5-TRIMETHYLBENZENE	ND	U	1	ND	U	1	ND	U	2.5	ND	U	1	NS	--	--
	2-BUTANONE	ND	U	10	ND	U	10	ND	U	25	ND	J-	10	NS	--	--
	2-CHLOROTOLUENE	ND	U	1	ND	U	1	ND	U	2.5	ND	U	1	NS	--	--
	2-HEXANONE	ND	U	5	ND	U	5	ND	U	12.5	ND	UJ	5	NS	--	--
	4-METHYL-2-PENTANONE	ND	U	5	ND	U	5	ND	U	12.5	ND	UJ	5	NS	--	--
	ACETONE	19.8	J	10	15.9	J	10	24.6	J	25	11.3	J	10	NS	--	--
	BENZENE	ND	U	1	ND	U	1	ND	U	2.5	ND	U	1	NS	--	--
	CARBON DISULFIDE	ND	U	1	ND	U	1	ND	U	2.5	ND	U	1	NS	--	--
	CHLOROMETHANE	ND	U	1	ND	U	1	ND	U	2.5	ND	U	1	NS	--	--
	DICHLORODIFLUOROMETHANE	ND	U	2	ND	U	2	ND	U	5	ND	U	2	NS	--	--
	ETHYLBENZENE	ND	U	1	ND	U	1	ND	U	2.5	0.619	J	1	NS	--	--
	ISOPROPYLBENZENE	ND	U	1	ND	U	1	1.46	J	2.5	1.51	J	1	NS	--	--
	METHYL TERT-BUTYL ETHER	ND	U	1	ND	U	1	ND	U	2.5	ND	U	1	NS	--	--
	METHYLENE CHLORIDE	ND	U	2	ND	U	2	ND	U	5	ND	U	2	NS	--	--
	NAPHTHALENE	ND	U	1	ND	U	1	1.34	J	2.5	ND	U	1	NS	--	--
	N-BUTYLBENZENE	ND	U	1	ND	U	1	ND	U	2.5	ND	U	1	NS	--	--
	N-PROPYLBENZENE	ND	U	1	ND	U	1	ND	U	2.5	ND	U	1	NS	--	--
	P-ISOPROPYLTOLUENE	ND	U	1	ND	U	1	1.29	J	2.5	ND	U	1	NS	--	--
	SEC-BUTYLBENZENE	ND	U	1	ND	U	1	ND	U	2.5	ND	U	1	NS	--	--
	TERT-BUTYLBENZENE	ND	U	1	ND	U	1	ND	U	2.5	ND	U	1	NS	--	--
	TOLUENE	ND	U	1	0.69	J	1	5.61		2.5	2.71		1	NS	--	--
	TRICHLOROETHENE	ND	U	1	ND	U	1	ND	U	2.5	ND	U	1	NS	--	--
	TRICHLOROFLUOROMETHANE	ND	U	2	ND	U	2	ND	U	5	ND	U	2	NS	--	--
	XYLENES	ND	U	3	ND	U	3	9.02	J	7.5	4.36	J	3	NS	--	--

Notes:

a. EPA analytical methods listed are for the most recent sampling event.

b. Samples were collected using Geotech Bladder Pumps.

c. Samples were recollected (except for QuantArray-Chlor analysis) using replacement QED Bladder Pumps.

-- = Not applicable.

δ2H - Delta Deuterium.

0/00 - Per mille.

cells/mL = Cells per milliliter.

EPA = Environmental Protection Agency.

FD = Field duplicate.

ID = Identification.

J = Estimated value, concentration is less than LOQ but greater than laboratory method detection limit (DL).

J+ = Estimated value, concentration is less than LOQ but greater than laboratory method detection limit (DL); biased high.

J- = Estimated value, concentration is less than LOQ but greater than laboratory method detection limit (DL); biased low.

KAFB = Kirtland Air Force Base.

LOQ = Limit of Quantitation

µg/L = Microgram per liter.

mg/L = Milligram per liter.

ND = Not detected.

NS = Not sampled.

REG = Regular/parent sample.

U = Analyte was not detected. The reported numerical value is at or below the LOQ.

UJ = Analyte was not detected. The reported value is estimated.

VAL QUAL = Validation qualifier.

VFA - Volatile fatty acid.

VOC = Volatile organic compound.

Table 14
Groundwater Analytical Results for KAFB-106MW2-I

	Phase Designation	Phase 1 Recirculation												Phase 1 Recirculation		
	Sample ID	106MW2I-P1R-100617			106MW2I-P1R-100917			106MW2I-P1R-101217			106MW2I-P1R-101617			106MW2I-P1R-102017		
	Sample Date	10/6/2017			10/9/2017			10/12/2017			10/16/2017			10/20/2017		
	Sample Pupose	REG			REG			REG			REG			REG		
Chemical Class and Analytical Method[a]	**Parameter**	**Result**	**Val Qual**	**LOQ**	**Result**	**Val Qual**	**LOQ**	**Result**	**Val Qual**	**LOQ**	**Result**	**Val Qual**	**LOQ**	**Result**	**Val Qual**	**LOQ**
Microbial Community (cells/mL) QuantArray-Chlor	1,1 DCA Reductase (DCA)	NS	--	--	NS	--	--	NS	--	--	NS	--	--	NS	--	--
	1,2 DCA Reductase (DCAR)	NS	--	--	NS	--	--	NS	--	--	NS	--	--	NS	--	--
	BAV1 Vinyl Chloride Reductase (BVC)	NS	--	--	NS	--	--	NS	--	--	NS	--	--	NS	--	--
	Chloroform Reductase (CFR)	NS	--	--	NS	--	--	NS	--	--	NS	--	--	NS	--	--
	Dehalobacter DCM (DCM)	NS	--	--	NS	--	--	NS	--	--	NS	--	--	NS	--	--
	Dehalobacter spp. (DHBt)	NS	--	--	NS	--	--	NS	--	--	NS	--	--	NS	--	--
	Dehalobium chlorocoercia (DECO)	NS	--	--	NS	--	--	NS	--	--	NS	--	--	NS	--	--
	Dehalococcoides (DHC)	NS	--	--	NS	--	--	NS	--	--	NS	--	--	NS	--	--
	Dehalogenimonas spp. (DHG)	NS	--	--	NS	--	--	NS	--	--	NS	--	--	NS	--	--
	Desulfitobacterium spp. (DSB)	NS	--	--	NS	--	--	NS	--	--	NS	--	--	NS	--	--
	Desulfuromonas spp. (DSM)	NS	--	--	NS	--	--	NS	--	--	NS	--	--	NS	--	--
	Dichloromethane Dehalogenase (DCMA)	NS	--	--	NS	--	--	NS	--	--	NS	--	--	NS	--	--
	Epoxyalkane Transferase (EtnE)	NS	--	--	NS	--	--	NS	--	--	NS	--	--	NS	--	--
	Ethene Monooxygenase (EtnC)	NS	--	--	NS	--	--	NS	--	--	NS	--	--	NS	--	--
	Methanogens (MGN)	NS	--	--	NS	--	--	NS	--	--	NS	--	--	NS	--	--
	PCE Reductase (PCE-1)	NS	--	--	NS	--	--	NS	--	--	NS	--	--	NS	--	--
	Phenol Hydroxylase (PHE)	NS	--	--	NS	--	--	NS	--	--	NS	--	--	NS	--	--
	PMMO	NS	--	--	NS	--	--	NS	--	--	NS	--	--	NS	--	--
	Soluble Methane Monooxygenase (SMMO)	NS	--	--	NS	--	--	NS	--	--	NS	--	--	NS	--	--
	Sulfate Reducing Bacteria (APS)	NS	--	--	NS	--	--	NS	--	--	NS	--	--	NS	--	--
	tceA Reductase (TCE)	NS	--	--	NS	--	--	NS	--	--	NS	--	--	NS	--	--
	Toluene Dioxygenase (TOD)	NS	--	--	NS	--	--	NS	--	--	NS	--	--	NS	--	--
	Toluene Monooxygenase (RMO)	NS	--	--	NS	--	--	NS	--	--	NS	--	--	NS	--	--
	Toluene Monooxygenase 2 (RDEG)	NS	--	--	NS	--	--	NS	--	--	NS	--	--	NS	--	--
	Total Eubacteria (EBAC)	NS	--	--	NS	--	--	NS	--	--	NS	--	--	NS	--	--
	trans-1,2-DCE Reductase (TDR)	NS	--	--	NS	--	--	NS	--	--	NS	--	--	NS	--	--
	Trichlorobenzene Dioxygenase (TCBO)	NS	--	--	NS	--	--	NS	--	--	NS	--	--	NS	--	--
	Vinyl Chloride Reductase (VCR)	NS	--	--	NS	--	--	NS	--	--	NS	--	--	NS	--	--
EDB (µg/L) EPA Method 8011	1,2-DIBROMOETHANE	NS	--	--	NS	--	--	NS	--	--	NS	--	--	NS	--	--
Fluorometric (µg/L) Spectrofluorophotometry	FLUORESCEIN	0.177		0.01	92.107		0.01	14.269		0.01	4.089		0.01	20.097		0.01
Reduced Gases (µg/L) RSKSOP-175	ACETYLENE	NS	--	--	NS	--	--	NS	--	--	NS	--	--	NS	--	--
	ETHANE	NS	--	--	NS	--	--	NS	--	--	NS	--	--	NS	--	--
	ETHYLENE	NS	--	--	NS	--	--	NS	--	--	NS	--	--	NS	--	--
	METHANE	NS	--	--	NS	--	--	NS	--	--	NS	--	--	NS	--	--
	PROPANE	NS	--	--	NS	--	--	NS	--	--	NS	--	--	NS	--	--
General Chemistry (mg/L) SM2320b, EPA Method 300, EPA Method 353.2, SM4500 PE	ALKALINITY	NS	--	--	NS	--	--	NS	--	--	NS	--	--	NS	--	--
	BROMIDE	NS	--	--	NS	--	--	NS	--	--	NS	--	--	NS	--	--
	CHLORIDE	NS	--	--	NS	--	--	NS	--	--	NS	--	--	NS	--	--
	IODIDE	NS	--	--	NS	--	--	NS	--	--	NS	--	--	NS	--	--
	NITRATE	NS	--	--	NS	--	--	NS	--	--	NS	--	--	NS	--	--
	NITRITE	NS	--	--	NS	--	--	NS	--	--	NS	--	--	NS	--	--
	NITROGEN, NITRATE-NITRITE	NS	--	--	NS	--	--	NS	--	--	NS	--	--	NS	--	--
	O-PHOSPHATE (AS P)	NS	--	--	NS	--	--	NS	--	--	NS	--	--	NS	--	--
	SULFATE	NS	--	--	NS	--	--	NS	--	--	NS	--	--	NS	--	--
VFAs (mg/L) EPA Method 300m	ACETIC ACID	NS	--	--	NS	--	--	NS	--	--	NS	--	--	NS	--	--
	BUTYRIC ACID	NS	--	--	NS	--	--	NS	--	--	NS	--	--	NS	--	--
	FORMIC ACID	NS	--	--	NS	--	--	NS	--	--	NS	--	--	NS	--	--
	LACTIC ACID	NS	--	--	NS	--	--	NS	--	--	NS	--	--	NS	--	--
	PROPIONIC ACID	NS	--	--	NS	--	--	NS	--	--	NS	--	--	NS	--	--
	PYRUVIC ACID	NS	--	--	NS	--	--	NS	--	--	NS	--	--	NS	--	--
	VALERIC ACID	NS	--	--	NS	--	--	NS	--	--	NS	--	--	NS	--	--

Table 14
Groundwater Analytical Results for KAFB-106MW2-I

	Phase Designation	Phase 1 Recirculation												Phase 1 Recirculation		
	Sample ID	106MW2I-P1R-100617			106MW2I-P1R-100917			106MW2I-P1R-101217			106MW2I-P1R-101617			106MW2I-P1R-102017		
	Sample Date	10/6/2017			10/9/2017			10/12/2017			10/16/2017			10/20/2017		
	Sample Pupose	REG			REG			REG			REG			REG		
Chemical Class and Analytical Method[a]	**Parameter**	**Result**	**Val Qual**	**LOQ**	**Result**	**Val Qual**	**LOQ**	**Result**	**Val Qual**	**LOQ**	**Result**	**Val Qual**	**LOQ**	**Result**	**Val Qual**	**LOQ**
Dissolved Metals (mg/L) EPA Method 6010	IRON	NS	--	--	NS	--	--	NS	--	--	NS	--	--	NS	--	--
	MANGANESE	NS	--	--	NS	--	--	NS	--	--	NS	--	--	NS	--	--
δ2H (0/00) Mass Spectrometry, USGS Reston, VA	DELTA2H	-96.38		-99	19.52		-99	-78.78		-99	-90.22		-99	-80.81		-99
VOCs (µg/L) EPA Method 8260	1,1,2-TRICHLOROETHANE	NS	--	--	NS	--	--	NS	--	--	NS	--	--	NS	--	--
	1,2,4-TRIMETHYLBENZENE	NS	--	--	NS	--	--	NS	--	--	NS	--	--	NS	--	--
	1,2-DIBROMOETHANE	NS	--	--	NS	--	--	NS	--	--	NS	--	--	NS	--	--
	1,2-DICHLOROETHANE	NS	--	--	NS	--	--	NS	--	--	NS	--	--	NS	--	--
	1,3,5-TRIMETHYLBENZENE	NS	--	--	NS	--	--	NS	--	--	NS	--	--	NS	--	--
	2-BUTANONE	NS	--	--	NS	--	--	NS	--	--	NS	--	--	NS	--	--
	2-CHLOROTOLUENE	NS	--	--	NS	--	--	NS	--	--	NS	--	--	NS	--	--
	2-HEXANONE	NS	--	--	NS	--	--	NS	--	--	NS	--	--	NS	--	--
	4-METHYL-2-PENTANONE	NS	--	--	NS	--	--	NS	--	--	NS	--	--	NS	--	--
	ACETONE	NS	--	--	NS	--	--	NS	--	--	NS	--	--	NS	--	--
	BENZENE	NS	--	--	NS	--	--	NS	--	--	NS	--	--	NS	--	--
	CARBON DISULFIDE	NS	--	--	NS	--	--	NS	--	--	NS	--	--	NS	--	--
	CHLOROMETHANE	NS	--	--	NS	--	--	NS	--	--	NS	--	--	NS	--	--
	DICHLORODIFLUOROMETHANE	NS	--	--	NS	--	--	NS	--	--	NS	--	--	NS	--	--
	ETHYLBENZENE	NS	--	--	NS	--	--	NS	--	--	NS	--	--	NS	--	--
	ISOPROPYLBENZENE	NS	--	--	NS	--	--	NS	--	--	NS	--	--	NS	--	--
	METHYL TERT-BUTYL ETHER	NS	--	--	NS	--	--	NS	--	--	NS	--	--	NS	--	--
	METHYLENE CHLORIDE	NS	--	--	NS	--	--	NS	--	--	NS	--	--	NS	--	--
	NAPHTHALENE	NS	--	--	NS	--	--	NS	--	--	NS	--	--	NS	--	--
	N-BUTYLBENZENE	NS	--	--	NS	--	--	NS	--	--	NS	--	--	NS	--	--
	N-PROPYLBENZENE	NS	--	--	NS	--	--	NS	--	--	NS	--	--	NS	--	--
	P-ISOPROPYLTOLUENE	NS	--	--	NS	--	--	NS	--	--	NS	--	--	NS	--	--
	SEC-BUTYLBENZENE	NS	--	--	NS	--	--	NS	--	--	NS	--	--	NS	--	--
	TERT-BUTYLBENZENE	NS	--	--	NS	--	--	NS	--	--	NS	--	--	NS	--	--
	TOLUENE	NS	--	--	NS	--	--	NS	--	--	NS	--	--	NS	--	--
	TRICHLOROETHENE	NS	--	--	NS	--	--	NS	--	--	NS	--	--	NS	--	--
	TRICHLOROFLUOROMETHANE	NS	--	--	NS	--	--	NS	--	--	NS	--	--	NS	--	--
	XYLENES	NS	--	--	NS	--	--	NS	--	--	NS	--	--	NS	--	--

Notes:

a. EPA analytical methods listed are for the most recent sampling event.

b. Samples were collected using Geotech Bladder Pumps.

c. Samples were recollected (except for QuantArray-Chlor analysis) using replacement QED Bladder Pumps.

-- = Not applicable.

δ2H - Delta Deuterium.

0/00 - Per mille.

cells/mL = Cells per milliliter.

EPA = Environmental Protection Agency.

FD = Field duplicate.

ID = Identification.

J = Estimated value, concentration is less than LOQ but greater than laboratory method detection limit (DL).

J+ = Estimated value, concentration is less than LOQ but greater than laboratory method detection limit (DL); biased high.

J- = Estimated value, concentration is less than LOQ but greater than laboratory method detection limit (DL); biased low.

KAFB = Kirtland Air Force Base.

LOQ = Limit of Quantitation

µg/L = Microgram per liter.

mg/L = Milligram per liter.

ND = Not detected.

NS = Not sampled.

REG = Regular/parent sample.

U = Analyte was not detected. The reported numerical value is at or below the LOQ.

UJ = Analyte was not detected. The reported value is estimated.

VAL QUAL = Validation qualifier.

VFA - Volatile fatty acid.

VOC = Volatile organic compound.

Table 14
Groundwater Analytical Results for KAFB-106MW2-I

	Phase Designation	Phase 1 Recirculation									Phase 1 Passive								
	Sample ID	106MW2I-P1R-102017-FD			106MW2I-P1R-102517			106MW2I-P1R-110117			106MW2I-P1P-111517			106MW2I-P1P-112917			106MW2I-P1P-112917-FD		
	Sample Date	10/20/2017			10/25/2017			11/1/2017			11/15/2017			11/29/2017			11/29/2017		
	Sample Pupose	FD			REG			REG			REG			REG			FD		
Chemical Class and Analytical Method[a]	Parameter	Result	Val Qual	LOQ	Result	Val Qual	LOQ	Result	Val Qual	LOQ	Result	Val Qual	LOQ	Result	Val Qual	LOQ	Result	Val Qual	LOQ
Microbial Community (cells/mL) QuantArray-Chlor	1,1 DCA Reductase (DCA)	NS	--	--	NS	--	--	NS	--	--	NS	--	--	ND	U	5.1	NS	--	--
	1,2 DCA Reductase (DCAR)	NS	--	--	NS	--	--	NS	--	--	NS	--	--	ND	U	5.1	NS	--	--
	BAV1 Vinyl Chloride Reductase (BVC)	NS	--	--	NS	--	--	NS	--	--	NS	--	--	ND	U	0.5	NS	--	--
	Chloroform Reductase (CFR)	NS	--	--	NS	--	--	NS	--	--	NS	--	--	ND	U	5.1	NS	--	--
	Dehalobacter DCM (DCM)	NS	--	--	NS	--	--	NS	--	--	NS	--	--	ND	U	5.1	NS	--	--
	Dehalobacter spp. (DHBt)	NS	--	--	NS	--	--	NS	--	--	NS	--	--	406000		5.1	NS	--	--
	Dehalobium chlorocoercia (DECO)	NS	--	--	NS	--	--	NS	--	--	NS	--	--	24200		5.1	NS	--	--
	Dehalococcoides (DHC)	NS	--	--	NS	--	--	NS	--	--	NS	--	--	ND	U	0.5	NS	--	--
	Dehalogenimonas spp. (DHG)	NS	--	--	NS	--	--	NS	--	--	NS	--	--	ND	U	5.1	NS	--	--
	Desulfitobacterium spp. (DSB)	NS	--	--	NS	--	--	NS	--	--	NS	--	--	327000		5.1	NS	--	--
	Desulfuromonas spp. (DSM)	NS	--	--	NS	--	--	NS	--	--	NS	--	--	37.4		5.1	NS	--	--
	Dichloromethane Dehalogenase (DCMA)	NS	--	--	NS	--	--	NS	--	--	NS	--	--	ND	U	5.1	NS	--	--
	Epoxyalkane Transferase (EtnE)	NS	--	--	NS	--	--	NS	--	--	NS	--	--	ND	U	5.1	NS	--	--
	Ethene Monooxygenase (EtnC)	NS	--	--	NS	--	--	NS	--	--	NS	--	--	ND	U	5.1	NS	--	--
	Methanogens (MGN)	NS	--	--	NS	--	--	NS	--	--	NS	--	--	19.1		5.1	NS	--	--
	PCE Reductase (PCE-1)	NS	--	--	NS	--	--	NS	--	--	NS	--	--	NS	--	--	NS	--	--
	Phenol Hydroxylase (PHE)	NS	--	--	NS	--	--	NS	--	--	NS	--	--	5820		5.1	NS	--	--
	PMMO	NS	--	--	NS	--	--	NS	--	--	NS	--	--	ND	U	5.1	NS	--	--
	Soluble Methane Monooxygenase (SMMO)	NS	--	--	NS	--	--	NS	--	--	NS	--	--	1030		5.1	NS	--	--
	Sulfate Reducing Bacteria (APS)	NS	--	--	NS	--	--	NS	--	--	NS	--	--	178000		5.1	NS	--	--
	tceA Reductase (TCE)	NS	--	--	NS	--	--	NS	--	--	NS	--	--	ND	U	0.5	NS	--	--
	Toluene Dioxygenase (TOD)	NS	--	--	NS	--	--	NS	--	--	NS	--	--	ND	U	5.1	NS	--	--
	Toluene Monooxygenase (RMO)	NS	--	--	NS	--	--	NS	--	--	NS	--	--	10300		5.1	NS	--	--
	Toluene Monooxygenase 2 (RDEG)	NS	--	--	NS	--	--	NS	--	--	NS	--	--	2860		5.1	NS	--	--
	Total Eubacteria (EBAC)	NS	--	--	NS	--	--	NS	--	--	NS	--	--	6550000		5.1	NS	--	--
	trans-1,2-DCE Reductase (TDR)	NS	--	--	NS	--	--	NS	--	--	NS	--	--	NS	--	--	NS	--	--
	Trichlorobenzene Dioxygenase (TCBO)	NS	--	--	NS	--	--	NS	--	--	NS	--	--	ND	U	5.1	NS	--	--
	Vinyl Chloride Reductase (VCR)	NS	--	--	NS	--	--	NS	--	--	NS	--	--	ND	U	0.5	NS	--	--
EDB (µg/L) EPA Method 8011	1,2-DIBROMOETHANE	NS	--	--	71.6		1.89	NS	--	--	33.7		3.83	20.1		1.91	17.1		1.9
Fluorometric (µg/L) Spectrofluorophotometry	FLUORESCEIN	NS	--	--	8.078		0.01	8.207		0.01	12.564		0.01	7.694		0.01	NS	--	--
Reduced Gases (µg/L) RSKSOP-175	ACETYLENE	NS	--	--	ND	U	10	NS	--	--	ND	U	10	ND	U	10	ND	U	10
	ETHANE	NS	--	--	ND	U	4	NS	--	--	ND	U	4	ND	U	4	ND	U	4
	ETHYLENE	NS	--	--	ND	U	5	NS	--	--	2.3	J	5	2.24	J	5	1.99	J	5
	METHANE	NS	--	--	ND	U	2	NS	--	--	2.61	J	2	17.2		2	16.3		2
	PROPANE	NS	--	--	ND	U	6	NS	--	--	ND	U	6	ND	U	6	ND	U	6
General Chemistry (mg/L) SM2320b, EPA Method 300, EPA Method 353.2, SM4500 PE	ALKALINITY	NS	--	--	328		1	NS	--	--	323		1	260		1	274		1
	BROMIDE	NS	--	--	0.546		0.125	NS	--	--	0.599		0.125	0.599		0.125	0.6		0.125
	CHLORIDE	NS	--	--	45.9		0.33	NS	--	--	44.1		0.33	42.9		0.33	42.8		0.33
	IODIDE	NS	--	--	ND	U	0.75	NS	--	--	ND	U	0.75	ND	U	0.75	ND	U	0.75
	NITRATE	NS	--	--	NS	--	--	NS	--	--	NS	--	--	NS	--	--	NS	--	--
	NITRITE	NS	--	--	NS	--	--	NS	--	--	NS	--	--	NS	--	--	NS	--	--
	NITROGEN, NITRATE-NITRITE	NS	--	--	ND	U	0.375	NS	--	--	ND	U	0.375	ND	U	0.375	ND	U	0.375
	O-PHOSPHATE (AS P)	NS	--	--	ND	U	0.02	NS	--	--	0.019	J	0.02	ND	U	0.02	ND	U	0.02
	SULFATE	NS	--	--	15.4		1	NS	--	--	2.98		1	2.37	J	1	2.42	J	1
VFAs (mg/L) EPA Method 300m	ACETIC ACID	NS	--	--	ND	U	1	NS	--	--	12.1		1	20.5		1	17.6		1
	BUTYRIC ACID	NS	--	--	ND	U	1	NS	--	--	ND	U	1	ND	U	1	ND	U	1
	FORMIC ACID	NS	--	--	ND	U	1	NS	--	--	ND	U	1	ND	U	1	ND	U	1
	LACTIC ACID	NS	--	--	ND	U	1	NS	--	--	ND	U	1	ND	U	1	ND	U	1
	PROPIONIC ACID	NS	--	--	ND	U	1	NS	--	--	ND	U	1	ND	U	1	ND	U	1
	PYRUVIC ACID	NS	--	--	ND	U	1	NS	--	--	ND	U	1	ND	U	1	ND	U	1
	VALERIC ACID	NS	--	--	ND	U	1	NS	--	--	ND	U	1	ND	U	1	ND	U	1

Table 14
Groundwater Analytical Results for KAFB-106MW2-I

	Phase Designation	Phase 1 Recirculation									Phase 1 Passive								
	Sample ID	106MW2I-P1R-102017-FD			106MW2I-P1R-102517			106MW2I-P1R-110117			106MW2I-P1P-111517			106MW2I-P1P-112917			106MW2I-P1P-112917-FD		
	Sample Date	10/20/2017			10/25/2017			11/1/2017			11/15/2017			11/29/2017			11/29/2017		
	Sample Pupose	FD			REG			REG			REG			REG			FD		
Chemical Class and Analytical Method[a]	**Parameter**	**Result**	**Val Qual**	**LOQ**	**Result**	**Val Qual**	**LOQ**	**Result**	**Val Qual**	**LOQ**	**Result**	**Val Qual**	**LOQ**	**Result**	**Val Qual**	**LOQ**	**Result**	**Val Qual**	**LOQ**
Dissolved Metals (mg/L) EPA Method 6010	IRON	NS	--	--	10.4		0.06	NS	--	--	18.7		0.06	18.3		0.06	17.8		0.06
	MANGANESE	NS	--	--	1.74		0.006	NS	--	--	2.95		0.006	2.81		0.006	2.76		0.006
δ2H (0/00) Mass Spectrometry, USGS Reston, VA	DELTA2H	-81.53		-99	-88.07		-99	-84.91		-99	-82.97		-99	-87.37		-99	-87.91		-99
VOCs (µg/L) EPA Method 8260	1,1,2-TRICHLOROETHANE	NS	--	--	ND	U	25	NS	--	--	ND	U	5	ND	U	2.5	ND	U	2.5
	1,2,4-TRIMETHYLBENZENE	NS	--	--	183		25	NS	--	--	115		5	54.9		2.5	57.7		2.5
	1,2-DIBROMOETHANE	NS	--	--	72.6		25	NS	--	--	40.2		5	21.7		2.5	22.3		2.5
	1,2-DICHLOROETHANE	NS	--	--	ND	U	25	NS	--	--	2.69	J	5	1.72	J	2.5	1.93	J	2.5
	1,3,5-TRIMETHYLBENZENE	NS	--	--	65.2		25	NS	--	--	50		5	28.6		2.5	29.5		2.5
	2-BUTANONE	NS	--	--	130	J	250	NS	--	--	43	J	50	16.6	J	25	16.8	J	25
	2-CHLOROTOLUENE	NS	--	--	ND	U	25	NS	--	--	ND	U	5	ND	U	2.5	ND	U	2.5
	2-HEXANONE	NS	--	--	148	J	125	NS	--	--	87.4		25	31.1		12.5	34.6		12.5
	4-METHYL-2-PENTANONE	NS	--	--	107	J	125	NS	--	--	64.1		25	32.6		12.5	34		12.5
	ACETONE	NS	--	--	724		250	NS	--	--	228		50	97.2		25	104		25
	BENZENE	NS	--	--	2290		25	NS	--	--	1060		5	410		2.5	411		2.5
	CARBON DISULFIDE	NS	--	--	ND	U	25	NS	--	--	ND	U	5	ND	U	2.5	ND	U	2.5
	CHLOROMETHANE	NS	--	--	ND	U	25	NS	--	--	ND	U	5	ND	U	2.5	ND	U	2.5
	DICHLORODIFLUOROMETHANE	NS	--	--	ND	U	50	NS	--	--	ND	U	10	ND	U	5	ND	U	5
	ETHYLBENZENE	NS	--	--	361		25	NS	--	--	166		5	31.3		2.5	32.5		2.5
	ISOPROPYLBENZENE	NS	--	--	32.9	J	25	NS	--	--	23.9		5	16.2		2.5	16.9		2.5
	METHYL TERT-BUTYL ETHER	NS	--	--	ND	U	25	NS	--	--	ND	U	5	ND	U	2.5	ND	U	2.5
	METHYLENE CHLORIDE	NS	--	--	ND	U	50	NS	--	--	ND	U	10	ND	U	5	ND	U	5
	NAPHTHALENE	NS	--	--	77.1		25	NS	--	--	59.7		5	29		2.5	31.9		2.5
	N-BUTYLBENZENE	NS	--	--	ND	U	25	NS	--	--	4.6	J	5	1.72	J	2.5	1.89	J	2.5
	N-PROPYLBENZENE	NS	--	--	30.8	J	25	NS	--	--	16.7		5	3.59	J	2.5	4.06	J	2.5
	P-ISOPROPYLTOLUENE	NS	--	--	ND	U	25	NS	--	--	56.1		5	47		2.5	49.3		2.5
	SEC-BUTYLBENZENE	NS	--	--	ND	U	25	NS	--	--	5.14	J	5	1.55	J	2.5	1.67	J	2.5
	TERT-BUTYLBENZENE	NS	--	--	ND	U	25	NS	--	--	ND	U	5	ND	U	2.5	ND	U	2.5
	TOLUENE	NS	--	--	3310		25	NS	--	--	336		5	62.6		2.5	63.9		2.5
	TRICHLOROETHENE	NS	--	--	ND	U	25	NS	--	--	ND	U	5	ND	U	2.5	ND	U	2.5
	TRICHLOROFLUOROMETHANE	NS	--	--	ND	U	50	NS	--	--	ND	U	10	ND	U	5	ND	U	5
	XYLENES	NS	--	--	1860		75	NS	--	--	1270		15	760		7.5	773		7.5

Notes:

a. EPA analytical methods listed are for the most recent sampling event.

b. Samples were collected using Geotech Bladder Pumps.

c. Samples were recollected (except for QuantArray-Chlor analysis) using replacement QED Bladder Pumps.

-- = Not applicable.

δ2H - Delta Deuterium.

0/00 - Per mille.

cells/mL = Cells per milliliter.

EPA = Environmental Protection Agency.

FD = Field duplicate.

ID = Identification.

J = Estimated value, concentration is less than LOQ but greater than laboratory method detection limit (DL).

J+ = Estimated value, concentration is less than LOQ but greater than laboratory method detection limit (DL); biased high.

J- = Estimated value, concentration is less than LOQ but greater than laboratory method detection limit (DL); biased low.

KAFB = Kirtland Air Force Base.

LOQ = Limit of Quantitation

µg/L = Microgram per liter.

mg/L = Milligram per liter.

ND = Not detected.

NS = Not sampled.

REG = Regular/parent sample.

U = Analyte was not detected. The reported numerical value is at or below the LOQ.

UJ = Analyte was not detected. The reported value is estimated.

VAL QUAL = Validation qualifier.

VFA - Volatile fatty acid.

VOC = Volatile organic compound.

Table 14
Groundwater Analytical Results for KAFB-106MW2-I

	Phase Designation	Phase 2 Recirculation						Phase 2 Recirculation			Phase 2 Passive											
	Sample ID	106MW2I-P2R-010918			106MW2I-P2R-011818			106MW2I-P2R-012418			106MW2I-P2P-030618			106MW2I-P2P-030618-FD			106MW2I-P2P-041118			106MW2I-P2P-050818		
	Sample Date	1/9/2018			1/18/2018			1/24/2018			3/6/2018			3/6/2018			4/11/2018			5/8/2018		
	Sample Pupose	REG			REG			REG			REG			FD			REG			REG		
Chemical Class and Analytical Method[a]	**Parameter**	**Result**	**Val Qual**	**LOQ**	**Result**	**Val Qual**	**LOQ**	**Result**	**Val Qual**	**LOQ**	**Result**	**Val Qual**	**LOQ**	**Result**	**Val Qual**	**LOQ**	**Result**	**Val Qual**	**LOQ**	**Result**	**Val Qual**	**LOQ**
Microbial Community (cells/mL) QuantArray-Chlor	1,1 DCA Reductase (DCA)	NS	--	--	NS	--	--	ND	U	5	NS	--	--	NS	--	--	NS	--	--	ND	U	4.9
	1,2 DCA Reductase (DCAR)	NS	--	--	NS	--	--	ND	U	5	NS	--	--	NS	--	--	NS	--	--	ND	U	4.9
	BAV1 Vinyl Chloride Reductase (BVC)	NS	--	--	NS	--	--	ND	U	0.5	NS	--	--	NS	--	--	NS	--	--	ND	U	0.5
	Chloroform Reductase (CFR)	NS	--	--	NS	--	--	ND	U	5	NS	--	--	NS	--	--	NS	--	--	ND	U	4.9
	Dehalobacter DCM (DCM)	NS	--	--	NS	--	--	ND	U	5	NS	--	--	NS	--	--	NS	--	--	299		4.9
	Dehalobacter spp. (DHBt)	NS	--	--	NS	--	--	306000		5	NS	--	--	NS	--	--	NS	--	--	174000		4.9
	Dehalobium chlorocoercia (DECO)	NS	--	--	NS	--	--	36400		5	NS	--	--	NS	--	--	NS	--	--	6240		4.9
	Dehalococcoides (DHC)	NS	--	--	NS	--	--	ND	U	0.5	NS	--	--	NS	--	--	NS	--	--	ND	U	0.5
	Dehalogenimonas spp. (DHG)	NS	--	--	NS	--	--	ND	U	5	NS	--	--	NS	--	--	NS	--	--	ND	U	4.9
	Desulfitobacterium spp. (DSB)	NS	--	--	NS	--	--	147000		5	NS	--	--	NS	--	--	NS	--	--	25500		4.9
	Desulfuromonas spp. (DSM)	NS	--	--	NS	--	--	156		5	NS	--	--	NS	--	--	NS	--	--	18.4		4.9
	Dichloromethane Dehalogenase (DCMA)	NS	--	--	NS	--	--	ND	U	5	NS	--	--	NS	--	--	NS	--	--	ND	U	4.9
	Epoxyalkane Transferase (EtnE)	NS	--	--	NS	--	--	ND	U	5	NS	--	--	NS	--	--	NS	--	--	219		4.9
	Ethene Monooxygenase (EtnC)	NS	--	--	NS	--	--	107		5	NS	--	--	NS	--	--	NS	--	--	ND	U	4.9
	Methanogens (MGN)	NS	--	--	NS	--	--	107		5	NS	--	--	NS	--	--	NS	--	--	10700		4.9
	PCE Reductase (PCE-1)	NS	--	--	NS	--	--	ND	U	5	NS	--	--	NS	--	--	NS	--	--	ND	U	4.9
	Phenol Hydroxylase (PHE)	NS	--	--	NS	--	--	21600		5	NS	--	--	NS	--	--	NS	--	--	3120		4.9
	PMMO	NS	--	--	NS	--	--	NS	--	--	NS	--	--	NS	--	--	NS	--	--	NS	--	--
	Soluble Methane Monooxygenase (SMMO)	NS	--	--	NS	--	--	ND	U	5	NS	--	--	NS	--	--	NS	--	--	ND	U	4.9
	Sulfate Reducing Bacteria (APS)	NS	--	--	NS	--	--	157000		5	NS	--	--	NS	--	--	NS	--	--	189000		4.9
	tceA Reductase (TCE)	NS	--	--	NS	--	--	ND	U	0.5	NS	--	--	NS	--	--	NS	--	--	ND	U	0.5
	Toluene Dioxygenase (TOD)	NS	--	--	NS	--	--	ND	U	5	NS	--	--	NS	--	--	NS	--	--	ND	U	4.9
	Toluene Monooxygenase (RMO)	NS	--	--	NS	--	--	73000		5	NS	--	--	NS	--	--	NS	--	--	24500		4.9
	Toluene Monooxygenase 2 (RDEG)	NS	--	--	NS	--	--	15700		5	NS	--	--	NS	--	--	NS	--	--	5880		4.9
	Total Eubacteria (EBAC)	NS	--	--	NS	--	--	5230000		5	NS	--	--	NS	--	--	NS	--	--	4360000		4.9
	trans-1,2-DCE Reductase (TDR)	NS	--	--	NS	--	--	ND	U	5	NS	--	--	NS	--	--	NS	--	--	ND	U	4.9
	Trichlorobenzene Dioxygenase (TCBO)	NS	--	--	NS	--	--	ND	U	5	NS	--	--	NS	--	--	NS	--	--	ND	U	4.9
	Vinyl Chloride Reductase (VCR)	NS	--	--	NS	--	--	ND	U		NS	--	--	NS	--	--	NS	--	--		J	
EDB (µg/L) EPA Method 8011	1,2-DIBROMOETHANE	39.2		1.9	37.1		1.88	31.3		1.9	1.98	J+	0.192	1.61	J+	0.188	1.08	J	0.0382	1.35		0.0378
Fluorometric (µg/L) Spectrofluorophotometry	FLUORESCEIN	NS	--	--	NS	--	--	NS	--	--	NS	--	--	NS	--	--	NS	--	--	NS	--	--
Reduced Gases (µg/L) RSKSOP-175	ACETYLENE	ND	U	10	ND	U	10	ND	U	10	ND	U	10	ND	U	10	ND	U	10	ND	U	10
	ETHANE	1.08	J	4	1.06		4	1.31	J	4	0.51	J	4	ND	U	4	0.4	J	4	0.45	J	4
	ETHYLENE	5.62		5	4.51	J	5	5.43		5	2.84	J	5	3.2	J	5	3.11		5	3.07		5
	METHANE	3.42		2	2.88		2	4.56		2	211		2	220		2	767.8		2	1440		2
	PROPANE	1.21	J	6	ND	U	6	1.47	J	6	ND	U	6	ND	U	6	ND	U	6	ND	U	6
General Chemistry (mg/L) SM2320b, EPA Method 300, EPA Method 353.2, SM4500 PE	ALKALINITY	305		1	334		1	342		1	277		1	283		1	255		1	313		1
	BROMIDE	0.544		0.25	0.685		0.25	0.547		0.25	0.251		0.125	0.251		0.125	0.29		0.125	0.517		0.25
	CHLORIDE	52.9		0.66	57.3	J+	0.66	47.1		0.66	26.4		0.33	26.5		0.33	31.3		0.33	47.7		0.66
	IODIDE	5.5		0.75	6		0.75	7.3		0.75	2.2		0.75	2.2		0.75	0.62	J	0.75	0.64	J	0.75
	NITRATE	NS	--	--	NS	--	--	NS	--	--	NS	--	--	NS	--	--	ND	U	0.1	ND	U	0.2
	NITRITE	NS	--	--	NS	--	--	NS	--	--	NS	--	--	NS	--	--	ND	U	0.1	ND	U	0.2
	NITROGEN, NITRATE-NITRITE	ND	U	0.375	ND	U	0.375	ND	U	0.375	ND	U	0.375	ND	U	0.375	NS	--	--	NS	--	--
	O-PHOSPHATE (AS P)	ND	U	0.02	0.0136	J	0.02	ND	U	0.02	ND	U	0.02	ND	U	0.02	ND	U	0.02	0.0113	J	0.02
	SULFATE	ND	U	2	ND	U	2	ND	U	2	1.77	J	1	1.74	J	1	2.77		1	ND	U	2
VFAs (mg/L) EPA Method 300m	ACETIC ACID	45.2	J	1	22.1		1	51.5		1	26.8		1	16.8		1	20.4		1	24.87		1
	BUTYRIC ACID	ND	U	1	ND	U	1	ND	U	1	ND	U	1	ND	U	1	ND	U	1	ND	U	1
	FORMIC ACID	ND	U	1	ND	U	1	ND	U	1	ND	U	1	ND	U	1	ND	U	1	ND	U	1
	LACTIC ACID	1.33	J-	1	0.57	J	1	ND	U	1	1.31		1	0.8	J	1	0.9	J	1	0.66	J	1
	PROPIONIC ACID	14.9	J	1	5.95		1	19.3		1	1		1	ND	U	1	1		1	ND	U	1
	PYRUVIC ACID	ND	U	1	ND	U	1	ND	U	1	ND	U	1	ND	U	1	ND	U	1	ND	U	1
	VALERIC ACID	ND	U	1	ND	U	1	ND	U	1	ND	U	1	ND	U	1	ND	U	1	ND	U	1

Table 14
Groundwater Analytical Results for KAFB-106MW2-I

	Phase Designation	Phase 2 Recirculation						Phase 2 Recirculation			Phase 2 Passive											
	Sample ID	106MW2I-P2R-010918			106MW2I-P2R-011818			106MW2I-P2R-012418			106MW2I-P2P-030618			106MW2I-P2P-030618-FD			106MW2I-P2P-041118			106MW2I-P2P-050818		
	Sample Date	1/9/2018			1/18/2018			1/24/2018			3/6/2018			3/6/2018			4/11/2018			5/8/2018		
	Sample Pupose	REG			REG			REG			REG			FD			REG			REG		
Chemical Class and Analytical Method[a]	**Parameter**	**Result**	**Val Qual**	**LOQ**	**Result**	**Val Qual**	**LOQ**	**Result**	**Val Qual**	**LOQ**	**Result**	**Val Qual**	**LOQ**	**Result**	**Val Qual**	**LOQ**	**Result**	**Val Qual**	**LOQ**	**Result**	**Val Qual**	**LOQ**
Dissolved Metals (mg/L) EPA Method 6010	IRON	22.1		0.06	20.7		0.06	20.4	J-	0.06	12.3		0.06	11.5		0.06	8.55	J-	0.06	17.6		0.06
	MANGANESE	3.75		0.006	3.73		0.006	3.32	J-	0.006	1.92		0.006	1.86		0.006	2.04	J+	0.006	3.29		0.006
δ2H (0/00) Mass Spectrometry, USGS Reston, VA	DELTA2H	NS	--	--	NS	--	--	NS	--	--	NS	--	--	NS	--	--	NS	--	--	NS	--	--
VOCs (µg/L) EPA Method 8260	1,1,2-TRICHLOROETHANE	ND	U	12.5	ND	U	25	ND	U	25	ND	U	5	ND	U	5	ND	U	1	ND	U	2.5
	1,2,4-TRIMETHYLBENZENE	143		12.5	130		25	220		25	38.7		5	42.2		5	16.1		1	20.8		2.5
	1,2-DIBROMOETHANE	40.7		12.5	31.1	J	25	25.9	J	25	ND	U	5	ND	U	5	1.37	J	1	2.53	J	2.5
	1,2-DICHLOROETHANE	ND	U	12.5	ND	U	25	ND	U	25	ND	U	5	ND	U	5	1.32	J	1	2.37	J	2.5
	1,3,5-TRIMETHYLBENZENE	83.2		12.5	70		25	94.3		25	23.9		5	25.6		5	16.3		1	30.9		2.5
	2-BUTANONE	ND	U	125	ND	U	250	ND	U	250	ND	U	50	ND	U	50	ND	U	10	ND	U	25
	2-CHLOROTOLUENE	ND	U	12.5	ND	U	25	ND	U	25	ND	U	5	ND	U	5	ND	U	1	ND	U	2.5
	2-HEXANONE	60.6	J	62.5	79.4	J	125	86.7	J	125	14.9	J+	25	15	J+	25	2.85	J	5	ND	U	12.5
	4-METHYL-2-PENTANONE	48.4	J	62.5	68.2	J	125	72.4	J	125	13.6	J	25	15.2	J	25	6.86	J	5	12.1	J	12.5
	ACETONE	163	J	125	257	J	250	239	J	250	48.5	J+	50	36.3	J+	50	22	J+	10	38.6	J	25
	BENZENE	1720		12.5	2300		25	3270		25	427		5	439		5	151		1	129		2.5
	CARBON DISULFIDE	ND	U	12.5	ND	U	25	ND	U	25	ND	U	5	ND	U	5	ND	U	1	ND	U	2.5
	CHLOROMETHANE	ND	U	12.5	ND	U	25	ND	U	25	ND	U	5	ND	U	5	ND	U	1	ND	U	2.5
	DICHLORODIFLUOROMETHANE	ND	U	25	ND	U	50	ND	U	50	ND	U	10	ND	U	10	ND	U	2	ND	U	5
	ETHYLBENZENE	354		12.5	383		25	491		25	89.8		5	90.5		5	26.8		1	21.6		2.5
	ISOPROPYLBENZENE	50.2		12.5	66.2		25	89.1		25	44.6		5	45		5	57.7		1	130		2.5
	METHYL TERT-BUTYL ETHER	ND	U	12.5	ND	U	25	ND	U	25	ND	U	5	ND	U	5	ND	U	1	ND	U	2.5
	METHYLENE CHLORIDE	ND	U	25	ND	U	50	ND	U	50	ND	U	10	ND	U	10	ND	U	2	ND	U	5
	NAPHTHALENE	62.7		12.5	72.5		25	72.9		25	17.5		5	18.5		5	12.9		1	11.3		2.5
	N-BUTYLBENZENE	8.28	J	12.5	ND	U	25	ND	U	25	2.71	J	5	2.96	J	5	1.53	J	1	3.16	J	2.5
	N-PROPYLBENZENE	29.5		12.5	37.7	J	25	49.4	J	25	8.66	J	5	8.99	J	5	3.49		1	4.66	J	2.5
	P-ISOPROPYLTOLUENE	126		12.5	111		25	121		25	ND	U	5	38.2		5	48.6		1	117		2.5
	SEC-BUTYLBENZENE	8.17	J	12.5	ND	U	25	ND	U	25	2.52	J	5	2.57	J	5	1.45	J	1	2.38	J	2.5
	TERT-BUTYLBENZENE	ND	U	12.5	ND	U	25	ND	U	25	ND	U	5	ND	U	5	ND	U	1	ND	U	2.5
	TOLUENE	2670		12.5	3570		25	3840		25	217		5	221		5	40.3		1	33		2.5
	TRICHLOROETHENE	ND	U	12.5	ND	U	25	ND	U	25	ND	U	5	ND	U	5	ND	U	1	ND	U	2.5
	TRICHLOROFLUOROMETHANE	ND	U	25	ND	U	50	ND	U	50	ND	U	10	ND	U	10	ND	U	2	ND	U	5
	XYLENES	1410		37.5	1580		75	1900		75	356		15	369		15	265		3	333		7.5

Notes:

a. EPA analytical methods listed are for the most recent sampling event.

b. Samples were collected using Geotech Bladder Pumps.

c. Samples were recollected (except for QuantArray-Chlor analysis) using replacement QED Bladder Pumps.

-- = Not applicable.

δ2H - Delta Deuterium.

0/00 - Per mille.

cells/mL = Cells per milliliter.

EPA = Environmental Protection Agency.

FD = Field duplicate.

ID = Identification.

J = Estimated value, concentration is less than LOQ but greater than laboratory method detection limit (DL).

J+ = Estimated value, concentration is less than LOQ but greater than laboratory method detection limit (DL); biased high.

J- = Estimated value, concentration is less than LOQ but greater than laboratory method detection limit (DL); biased low.

KAFB = Kirtland Air Force Base.

LOQ = Limit of Quantitation

µg/L = Microgram per liter.

mg/L = Milligram per liter.

ND = Not detected.

NS = Not sampled.

REG = Regular/parent sample.

U = Analyte was not detected. The reported numerical value is at or below the LOQ.

UJ = Analyte was not detected. The reported value is estimated.

VAL QUAL = Validation qualifier.

VFA - Volatile fatty acid.

VOC = Volatile organic compound.

Table 14
Groundwater Analytical Results for KAFB-106MW2-I

	Phase Designation	Phase 2 Passive			Phase 3 Recirculation									Phase 3 Recirculation		
	Sample ID	106MW2I-P2P-061218			106MW2I-P3R-080718			106MW2I-P3R-081518			106MW2I-P3R-082118			106MW2I-P3R-082818		
	Sample Date	6/12/2018			8/7/2018			8/15/2018			8/21/2018			8/28/2018		
	Sample Pupose	REG			REG			REG			REG			REG		
Chemical Class and Analytical Method[a]	**Parameter**	**Result**	**Val Qual**	**LOQ**	**Result**	**Val Qual**	**LOQ**	**Result**	**Val Qual**	**LOQ**	**Result**	**Val Qual**	**LOQ**	**Result**	**Val Qual**	**LOQ**
Microbial Community (cells/mL) QuantArray-Chlor	1,1 DCA Reductase (DCA)	NS	--	--	NS	--	--	NS	--	--	ND	U	5.1	NS	--	--
	1,2 DCA Reductase (DCAR)	NS	--	--	NS	--	--	NS	--	--	ND	U	5.1	NS	--	--
	BAV1 Vinyl Chloride Reductase (BVC)	NS	--	--	NS	--	--	NS	--	--	ND	U	0.5	NS	--	--
	Chloroform Reductase (CFR)	NS	--	--	NS	--	--	NS	--	--	ND	U	5.1	NS	--	--
	Dehalobacter DCM (DCM)	NS	--	--	NS	--	--	NS	--	--	314		5.1	NS	--	--
	Dehalobacter spp. (DHBt)	NS	--	--	NS	--	--	NS	--	--	107000		5.1	NS	--	--
	Dehalobium chlorocoercia (DECO)	NS	--	--	NS	--	--	NS	--	--	6580		5.1	NS	--	--
	Dehalococcoides (DHC)	NS	--	--	NS	--	--	NS	--	--	ND	U	0.5	NS	--	--
	Dehalogenimonas spp. (DHG)	NS	--	--	NS	--	--	NS	--	--	ND	U	5.1	NS	--	--
	Desulfitobacterium spp. (DSB)	NS	--	--	NS	--	--	NS	--	--	23200		5.1	NS	--	--
	Desulfuromonas spp. (DSM)	NS	--	--	NS	--	--	NS	--	--	ND	U	5.1	NS	--	--
	Dichloromethane Dehalogenase (DCMA)	NS	--	--	NS	--	--	NS	--	--	ND	U	5.1	NS	--	--
	Epoxyalkane Transferase (EtnE)	NS	--	--	NS	--	--	NS	--	--	ND	U	5.1	NS	--	--
	Ethene Monooxygenase (EtnC)	NS	--	--	NS	--	--	NS	--	--	ND	U	5.1	NS	--	--
	Methanogens (MGN)	NS	--	--	NS	--	--	NS	--	--	3500		5.1	NS	--	--
	PCE Reductase (PCE-1)	NS	--	--	NS	--	--	NS	--	--	ND	U	5.1	NS	--	--
	Phenol Hydroxylase (PHE)	NS	--	--	NS	--	--	NS	--	--	275		5.1	NS	--	--
	PMMO	NS	--	--	NS	--	--	NS	--	--	NS	--	--	NS	--	--
	Soluble Methane Monooxygenase (SMMO)	NS	--	--	NS	--	--	NS	--	--	ND	U	5.1	NS	--	--
	Sulfate Reducing Bacteria (APS)	NS	--	--	NS	--	--	NS	--	--	94500		5.1	NS	--	--
	tceA Reductase (TCE)	NS	--	--	NS	--	--	NS	--	--	ND	U	0.5	NS	--	--
	Toluene Dioxygenase (TOD)	NS	--	--	NS	--	--	NS	--	--	ND	U	5.1	NS	--	--
	Toluene Monooxygenase (RMO)	NS	--	--	NS	--	--	NS	--	--	5180		5.1	NS	--	--
	Toluene Monooxygenase 2 (RDEG)	NS	--	--	NS	--	--	NS	--	--	702		5.1	NS	--	--
	Total Eubacteria (EBAC)	NS	--	--	NS	--	--	NS	--	--	4050000		5.1	NS	--	--
	trans-1,2-DCE Reductase (TDR)	NS	--	--	NS	--	--	NS	--	--	ND	U	5.1	NS	--	--
	Trichlorobenzene Dioxygenase (TCBO)	NS	--	--	NS	--	--	NS	--	--	ND	U	5.1	NS	--	--
	Vinyl Chloride Reductase (VCR)	NS	--	--	NS	--	--	NS	--	--	ND	U		NS	--	--
EDB (µg/L) EPA Method 8011	1,2-DIBROMOETHANE	2.82		0.192	NA	--	--	0.77		0.003	0.62		0.003	5.1		0.029
Fluorometric (µg/L) Spectrofluorophotometry	FLUORESCEIN	NS	--	--	NS	--	--	NS	--	--	NS	--	--	NS	--	--
Reduced Gases (µg/L) RSKSOP-175	ACETYLENE	ND	U	10	ND	U	10	ND	U	10	ND	U	10	ND	U	10
	ETHANE	0.6	J	4	0.9	J	4	1.2	J	4	1.4	J	4	1.6	J	4
	ETHYLENE	2.1	J	5	4.1	J	5	4	J	5	4.1	J	5	4.7	J	5
	METHANE	1560.2		2	1028.2		2	1376.3		2	1683.1		2	2159.4		2
	PROPANE	0.9	J	6	1.1	J	6	1.3	J	6	1.4	J	6	1.5	J	6
General Chemistry (mg/L) SM2320b, EPA Method 300, EPA Method 353.2, SM4500 PE	ALKALINITY	364		1	NA	--	--	350		5	380		5	390		5
	BROMIDE	0.632		0.25	NA	--	--	0.9		0.5	0.83		0.5	0.96		0.5
	CHLORIDE	56.8		0.66	NA	--	--	53		0.5	52		0.5	53		0.5
	IODIDE	2.3		0.75	8.1		0.75	6.9		0.75	8		0.75	10		0.75
	NITRATE	ND	U	0.2	NA	--	--	NS	--	--	NS	--	--	NS	--	--
	NITRITE	ND	U	0.2	NA	--	--	NS	--	--	NS	--	--	NS	--	--
	NITROGEN, NITRATE-NITRITE	NS	--	--	NA	--	--	ND	U	0.05	ND		0.05	ND	U	0.05
	O-PHOSPHATE (AS P)	0.022		0.02	NA	--	--	ND	U	0.15	ND		0.15	ND	U	0.15
	SULFATE	ND	U	2	NA	--	--	ND	U	1	ND		1	ND	U	1
VFAs (mg/L) EPA Method 300m	ACETIC ACID	11.8		1	22.1		1	44.7		10	39.3		10	28.1		10
	BUTYRIC ACID	ND	U	1	ND	U	1	ND	U	1	ND	U	1	ND	U	1
	FORMIC ACID	ND	U	1	4	J	10	ND	U	1	ND	U	1	0.9	J	10
	LACTIC ACID	0.6	J	1	0.2	J	1	0.6	J	1	0.6	J	1	0.6	J	1
	PROPIONIC ACID	ND	U	1	ND	U	1	4.5	J	10	5.6	J	10	10.3		10
	PYRUVIC ACID	ND	U	1	ND	U	1	ND	U	1	ND	U	1	ND	U	1
	VALERIC ACID	ND	U	1	ND	U	1	ND	U	1	ND	U	1	ND	U	1

Table 14
Groundwater Analytical Results for KAFB-106MW2-I

	Phase Designation	Phase 2 Passive			Phase 3 Recirculation									Phase 3 Recirculation		
	Sample ID	106MW2I-P2P-061218			106MW2I-P3R-080718			106MW2I-P3R-081518			106MW2I-P3R-082118			106MW2I-P3R-082818		
	Sample Date	6/12/2018			8/7/2018			8/15/2018			8/21/2018			8/28/2018		
	Sample Pupose	REG			REG			REG			REG			REG		
Chemical Class and Analytical Method[a]	**Parameter**	**Result**	**Val Qual**	**LOQ**	**Result**	**Val Qual**	**LOQ**	**Result**	**Val Qual**	**LOQ**	**Result**	**Val Qual**	**LOQ**	**Result**	**Val Qual**	**LOQ**
Dissolved Metals (mg/L) EPA Method 6010	IRON	18.7		0.06	NA	--	--	15		0.05	14		0.05	15		0.05
	MANGANESE	3.8		0.006	NA	--	--	4.5		0.003	4.2		0.003	4.5		0.003
δ2H (0/00) Mass Spectrometry, USGS Reston, VA	DELTA2H	NS	--	--	NS	--	--	NS	--	--	NS	--	--	NS	--	--
VOCs (µg/L) EPA Method 8260	1,1,2-TRICHLOROETHANE	ND	U	1	NA	--	--	ND	U	25	ND	U	5	ND	U	25
	1,2,4-TRIMETHYLBENZENE	17.7		1	NA	--	--	190		50	180		10	220		50
	1,2-DIBROMOETHANE	3.56		1	NA	--	--	ND	U	50	ND	U	10	ND	U	50
	1,2-DICHLOROETHANE	3.03		1	NA	--	--	ND	U	50	ND	U	10	ND	U	50
	1,3,5-TRIMETHYLBENZENE	30.7		1	NA	--	--	83		25	71		5	82		25
	2-BUTANONE	ND	U	10	NA	--	--	ND	U	500	ND	U	100	ND	U	500
	2-CHLOROTOLUENE	ND	U	1	NA	--	--	ND	U	25	ND	U	5	ND	U	25
	2-HEXANONE	ND	U	5	NA	--	--	ND	U	250	48	J	50	ND	U	250
	4-METHYL-2-PENTANONE	8.08	J	5	NA	--	--	ND	U	250	53	J	50	ND	U	250
	ACETONE	21.5		10	NA	--	--	ND	U	500	100		100	ND	U	500
	BENZENE	52.7		1	NA	--	--	1700		50	1900		20	3100		50
	CARBON DISULFIDE	ND	U	1	NA	--	--	ND	U	100	ND	U	20	ND	U	100
	CHLOROMETHANE	ND	U	1	NA	--	--	ND	U	50	ND	U	10	ND	U	50
	DICHLORODIFLUOROMETHANE	ND	U	2	NA	--	--	ND	U	50	ND	U	10	ND	U	50
	ETHYLBENZENE	6.61		1	NA	--	--	420		50	430		10	640		50
	ISOPROPYLBENZENE	137		1	NA	--	--	120		50	95		10	120		50
	METHYL TERT-BUTYL ETHER	0.546	J	1	NA	--	--	ND	U	25	ND	U	5	ND	U	25
	METHYLENE CHLORIDE	ND	U	2	NA	--	--	ND	U	250	ND	U	50	240	J	250
	NAPHTHALENE	4.9		1	NA	--	--	170	J	250	89		50	ND	U	250
	N-BUTYLBENZENE	ND	U	1	NA	--	--	ND	U	50	6.8	J	10	ND	U	50
	N-PROPYLBENZENE	1.78	J	1	NA	--	--	49	J	50	37		10	50		50
	P-ISOPROPYLTOLUENE	130		1	NA	--	--	140		50	90		10	97		50
	SEC-BUTYLBENZENE	1.16	J	1	NA	--	--	ND	U	50	7.6	J	10	ND	U	50
	TERT-BUTYLBENZENE	ND	U	1	NA	--	--	ND	U	50	ND	U	10	ND	U	50
	TOLUENE	12.1		1	NA	--	--	2700		50	2000		20	3000		50
	TRICHLOROETHENE	ND	U	1	NA	--	--	ND	U	50	ND	U	10	ND	U	50
	TRICHLOROFLUOROMETHANE	ND	U	2	NA	--	--	ND	U	50	ND	U	10	ND	U	50
	XYLENES	311		3	NA	--	--	1200		25	1200		5	1900		25

Notes:

a. EPA analytical methods listed are for the most recent sampling event.

b. Samples were collected using Geotech Bladder Pumps.

c. Samples were recollected (except for QuantArray-Chlor analysis) using replacement QED Bladder Pumps.

-- = Not applicable.

δ2H - Delta Deuterium.

0/00 - Per mille.

cells/mL = Cells per milliliter.

EPA = Environmental Protection Agency.

FD = Field duplicate.

ID = Identification.

J = Estimated value, concentration is less than LOQ but greater than laboratory method detection limit (DL).

J+ = Estimated value, concentration is less than LOQ but greater than laboratory method detection limit (DL); biased high.

J- = Estimated value, concentration is less than LOQ but greater than laboratory method detection limit (DL); biased low.

KAFB = Kirtland Air Force Base.

LOQ = Limit of Quantitation

µg/L = Microgram per liter.

mg/L = Milligram per liter.

ND = Not detected.

NS = Not sampled.

REG = Regular/parent sample.

U = Analyte was not detected. The reported numerical value is at or below the LOQ.

UJ = Analyte was not detected. The reported value is estimated.

VAL QUAL = Validation qualifier.

VFA - Volatile fatty acid.

VOC = Volatile organic compound.

Table 14
Groundwater Analytical Results for KAFB-106MW2-I

	Phase Designation	Phase 3 Passive												Phase 4 Passive		
	Sample ID	106MW2I-P3P-091118			106MW2I-P3P-100218			106MW2I-P3P-111518			106MW2I-P3P-111518-FD			106MW2I-P4P-011719		
	Sample Date	9/11/2018			10/2/2018			11/15/2018			11/15/2018			1/17/2019		
	Sample Pupose	REG			REG			REG			FD			REG		
Chemical Class and Analytical Method[a]	**Parameter**	**Result**	**Val Qual**	**LOQ**	**Result**	**Val Qual**	**LOQ**	**Result**	**Val Qual**	**LOQ**	**Result**	**Val Qual**	**LOQ**	**Result**	**Val Qual**	**LOQ**
Microbial Community (cells/mL) QuantArray-Chlor	1,1 DCA Reductase (DCA)	NS	--	--	NS	--	--	ND	U	5.6	NS	--	--	ND	U	4.9
	1,2 DCA Reductase (DCAR)	NS	--	--	NS	--	--	ND	U	5.6	NS	--	--	ND	U	4.9
	BAV1 Vinyl Chloride Reductase (BVC)	NS	--	--	NS	--	--	ND	U	0.6	NS	--	--	ND	U	0.5
	Chloroform Reductase (CFR)	NS	--	--	NS	--	--	ND	U	5.6	NS	--	--	ND	U	4.9
	Dehalobacter DCM (DCM)	NS	--	--	NS	--	--	193		5.6	NS	--	--	95.5		4.9
	Dehalobacter spp. (DHBt)	NS	--	--	NS	--	--	82300		5.6	NS	--	--	70400		4.9
	Dehalobium chlorocoercia (DECO)	NS	--	--	NS	--	--	1590		5.6	NS	--	--	3950		4.9
	Dehalococcoides (DHC)	NS	--	--	NS	--	--	0.5	J	0.6	NS	--	--	0.9		0.5
	Dehalogenimonas spp. (DHG)	NS	--	--	NS	--	--	ND	U	5.6	NS	--	--	ND	U	4.9
	Desulfitobacterium spp. (DSB)	NS	--	--	NS	--	--	33900		5.6	NS	--	--	13300		4.9
	Desulfuromonas spp. (DSM)	NS	--	--	NS	--	--	0.4	J	5.6	NS	--	--	65.2		4.9
	Dichloromethane Dehalogenase (DCMA)	NS	--	--	NS	--	--	ND	U	5.6	NS	--	--	ND	U	4.9
	Epoxyalkane Transferase (EtnE)	NS	--	--	NS	--	--	27.7		5.6	NS	--	--	90.2		4.9
	Ethene Monooxygenase (EtnC)	NS	--	--	NS	--	--	ND	U	5.6	NS	--	--	ND	U	4.9
	Methanogens (MGN)	NS	--	--	NS	--	--	7040		5.6	NS	--	--	7070		4.9
	PCE Reductase (PCE-1)	NS	--	--	NS	--	--	ND	U	5.6	NS	--	--	ND	U	4.9
	Phenol Hydroxylase (PHE)	NS	--	--	NS	--	--	806		5.6	NS	--	--	771		4.9
	PMMO	NS	--	--	NS	--	--	NS	--	--	NS	--	--	NS	--	--
	Soluble Methane Monooxygenase (SMMO)	NS	--	--	NS	--	--	ND	U	5.6	NS	--	--	261		4.9
	Sulfate Reducing Bacteria (APS)	NS	--	--	NS	--	--	131000		5.6	NS	--	--	304000		4.9
	tceA Reductase (TCE)	NS	--	--	NS	--	--	0.2	J	0.6	NS	--	--	ND	U	0.5
	Toluene Dioxygenase (TOD)	NS	--	--	NS	--	--	ND	U	5.6	NS	--	--	ND	U	4.9
	Toluene Monooxygenase (RMO)	NS	--	--	NS	--	--	4420		5.6	NS	--	--	14800		4.9
	Toluene Monooxygenase 2 (RDEG)	NS	--	--	NS	--	--	5620		5.6	NS	--	--	42200		4.9
	Total Eubacteria (EBAC)	NS	--	--	NS	--	--	1440000		5.6	NS	--	--	6240000		4.9
	trans-1,2-DCE Reductase (TDR)	NS	--	--	NS	--	--	ND	U	5.6	NS	--	--	ND	U	4.9
	Trichlorobenzene Dioxygenase (TCBO)	NS	--	--	NS	--	--	ND	U	5.6	NS	--	--	ND	U	4.9
	Vinyl Chloride Reductase (VCR)	NS	--	--	NS	--	--	ND	U		NS	--	--	ND	U	0.5
EDB (µg/L) EPA Method 8011	1,2-DIBROMOETHANE	0.81		0.003	0.38	J+	0.0015	0.24		0.003	0.27		0.003	0.41		0.003
Fluorometric (µg/L) Spectrofluorophotometry	FLUORESCEIN	NS	--	--	NS	--	--	NS	--	--	NS	--	--	NS	--	--
Reduced Gases (µg/L) RSKSOP-175	ACETYLENE	ND	U	10	ND	U	10	ND	U	10	ND	U	10	ND		10
	ETHANE	1.4	J	4	0.8	J	4	1.1	J	4	1	J	4	ND		4
	ETHYLENE	3.5	J	5	1.3	J	5	1.1	J	5	1.1	J	5	ND		5
	METHANE	2745.2		2	2903.9		2	2646		2	2704.5		2	1989.6		2
	PROPANE	1.3	J	6	ND	U	6	1.1	J	6	1	J	6	ND		6
General Chemistry (mg/L) SM2320b, EPA Method 300, EPA Method 353.2, SM4500 PE	ALKALINITY	410		5	370		5	350		5	350		5	230		5
	BROMIDE	0.93		0.5	1.4		0.5	1		0.5	1		0.5	ND		0.5
	CHLORIDE	52		0.5	49		0.5	47		0.5	47		0.5	27		0.5
	IODIDE	13		0.75	11		0.75	6.7		0.75	6.9		0.75	2.1		0.75
	NITRATE	NS	--	--	NS	--	--	NS	--	--	NS	--	--	NS	--	--
	NITRITE	NS	--	--	NS	--	--	NS	--	--	NS	--	--	NS	--	--
	NITROGEN, NITRATE-NITRITE	ND	U	0.1	ND	U	0.05	ND	U	0.5	ND	U	0.5	ND		0.05
	O-PHOSPHATE (AS P)	ND	U	0.15	ND	UJ	0.15	ND	UJ	0.15	ND	UJ	0.15	ND		0.15
	SULFATE	ND	U	1	ND	U	1	ND	U	1	ND	U	1	12		1
VFAs (mg/L) EPA Method 300m	ACETIC ACID	31.3		10	4		1	ND	U	1	ND	U	1	0.5		1
	BUTYRIC ACID	ND	U	1	ND	U	1	ND	U	1	ND	U	1	ND		1
	FORMIC ACID	ND	U	1	ND	U	1	0.5	J	1	0.5	J	1	ND		1
	LACTIC ACID	0.6	J	1	0.7	J	1	1.2		1	1		1	1.5		1
	PROPIONIC ACID	14.2		10	ND	U	1	ND	U	1	ND	U	1	ND		1
	PYRUVIC ACID	ND	U	1	ND	U	1	ND	U	1	ND	U	1	ND		1
	VALERIC ACID	ND	U	1	ND	U	1	ND	U	1	ND	U	1	ND		1

Table 14
Groundwater Analytical Results for KAFB-106MW2-I

	Phase Designation	Phase 3 Passive												Phase 4 Passive		
	Sample ID	106MW2I-P3P-091118			106MW2I-P3P-100218			106MW2I-P3P-111518			106MW2I-P3P-111518-FD			106MW2I-P4P-011719		
	Sample Date	9/11/2018			10/2/2018			11/15/2018			11/15/2018			1/17/2019		
	Sample Pupose	REG			REG			REG			FD			REG		
Chemical Class and Analytical Method[a]	**Parameter**	**Result**	**Val Qual**	**LOQ**	**Result**	**Val Qual**	**LOQ**	**Result**	**Val Qual**	**LOQ**	**Result**	**Val Qual**	**LOQ**	**Result**	**Val Qual**	**LOQ**
Dissolved Metals (mg/L) EPA Method 6010	IRON	15		0.05	13		0.05	22		0.05	21		0.05	6.4		0.05
	MANGANESE	5.2		0.003	4.8		0.003	3.9		0.003	3.8		0.003	2.1		0.003
δ2H (0/00) Mass Spectrometry, USGS Reston, VA	DELTA2H	NS	--	--	NS	--	--	NS	--	--	NS	--	--	NS	--	--
VOCs (µg/L) EPA Method 8260	1,1,2-TRICHLOROETHANE	ND	U	50	ND	U	50	ND	U	50	ND	U	50	ND		1
	1,2,4-TRIMETHYLBENZENE	240		100	170		100	55	J	100	57	J	100	14		2
	1,2-DIBROMOETHANE	ND	U	100	ND	U	100	ND	U	100	ND	U	100	ND		2
	1,2-DICHLOROETHANE	ND	U	100	ND	U	100	ND	U	100	ND	U	100	NA	--	--
	1,3,5-TRIMETHYLBENZENE	85	J	50	72	J	50	33	J	50	ND	U	50	5.1		1
	2-BUTANONE	ND	U	1000	ND	U	1000	ND	U	1000	ND	U	1000	ND		20
	2-CHLOROTOLUENE	ND	U	50	ND	U	50	ND	U	50	ND	U	50	ND		1
	2-HEXANONE	ND	U	500	ND	U	500	ND	U	500	ND	U	500	ND		10
	4-METHYL-2-PENTANONE	ND	U	500	ND	U	500	ND	U	500	ND	U	500	ND		10
	ACETONE	ND	U	1000	ND	U	1000	ND	U	1000	ND	U	1000	ND		20
	BENZENE	3100		100	2300		100	630		100	610		100	130		2
	CARBON DISULFIDE	ND	U	200	ND	U	100	ND	U	200	ND	U	200	ND		4
	CHLOROMETHANE	ND	U	100	ND	U	100	ND	U	100	ND	U	100	ND		2
	DICHLORODIFLUOROMETHANE	ND	U	100	ND	U	100	ND	U	100	ND	U	100	NA	--	--
	ETHYLBENZENE	730		100	410		100	170		100	170		100	NA	--	--
	ISOPROPYLBENZENE	140		100	150		100	94	J	100	92	J	100	48		2
	METHYL TERT-BUTYL ETHER	ND	U	50	ND	U	50	ND	U	50	ND	U	50	ND		1
	METHYLENE CHLORIDE	ND	U	500	ND	U	500	ND	U	500	ND	U	500	ND		10
	NAPHTHALENE	ND	U	500	ND	U	500	ND	U	500	ND	U	500	ND		10
	N-BUTYLBENZENE	ND	U	100	ND	U	100	ND	U	100	ND	U	100	ND		2
	N-PROPYLBENZENE	58	J	100	43	J	100	ND	U	100	ND	U	100	2.7		2
	P-ISOPROPYLTOLUENE	100		100	180		100	ND	U	100	ND	U	100	38		2
	SEC-BUTYLBENZENE	ND	U	100	ND	U	100	ND	U	100	ND	U	100	ND		2
	TERT-BUTYLBENZENE	ND	U	100	ND	U	100	ND	U	100	ND	U	100	ND		2
	TOLUENE	3400		100	300		100	410		100	390		100	7.4		2
	TRICHLOROETHENE	ND	U	100	ND	U	100	280		100	98	J	100	ND		2
	TRICHLOROFLUOROMETHANE	ND	U	100	ND	U	100	ND	U	100	ND	U	100	ND		2
	XYLENES	2100		50	1200		50	430		50	400		50	82		1

Notes:

a. EPA analytical methods listed are for the most recent sampling event.

b. Samples were collected using Geotech Bladder Pumps.

c. Samples were recollected (except for QuantArray-Chlor analysis) using replacement QED Bladder Pumps.

-- = Not applicable.

δ2H - Delta Deuterium.

0/00 - Per mille.

cells/mL = Cells per milliliter.

EPA = Environmental Protection Agency.

FD = Field duplicate.

ID = Identification.

J = Estimated value, concentration is less than LOQ but greater than laboratory method detection limit (DL).

J+ = Estimated value, concentration is less than LOQ but greater than laboratory method detection limit (DL); biased high.

J- = Estimated value, concentration is less than LOQ but greater than laboratory method detection limit (DL); biased low.

KAFB = Kirtland Air Force Base.

LOQ = Limit of Quantitation

µg/L = Microgram per liter.

mg/L = Milligram per liter.

ND = Not detected.

NS = Not sampled.

REG = Regular/parent sample.

U = Analyte was not detected. The reported numerical value is at or below the LOQ.

UJ = Analyte was not detected. The reported value is estimated.

VAL QUAL = Validation qualifier.

VFA - Volatile fatty acid.

VOC = Volatile organic compound.

Table 15
Groundwater Analytical Results for KAFB-106MW2-S

	Phase Designation	Original Baseline[b]			New Baseline - QED Pumps[c]			Phase 1 Recirculation						Phase 1 Recirculation					
	Sample ID	106MW2S-BL-080717			106MW2S-BL-091917			106MW2S-P1R-100417			106MW2S-P1R-100617			106MW2S-P1R-100917			106MW2S-P1R-101217		
	Sample Date	8/7/2017			9/19/2017			10/4/2017			10/6/2017			10/9/2017			10/12/2017		
	Sample Pupose	REG			REG			REG			REG			REG			REG		
Chemical Class and Analytical Method[a]	**Parameter**	**Result**	**Val Qual**	**LOQ**	**Result**	**Val Qual**	**LOQ**	**Result**	**Val Qual**	**LOQ**	**Result**	**Val Qual**	**LOQ**	**Result**	**Val Qual**	**LOQ**	**Result**	**Val Qual**	**LOQ**
Microbial Community (cells/mL) QuantArray-Chlor	1,1 DCA Reductase (DCA)	ND	U	5.2	NS	--	--	NS	--	--	NS	--	--	NS	--	--	NS	--	--
	1,2 DCA Reductase (DCAR)	ND	U	5.2	NS	--	--	NS	--	--	NS	--	--	NS	--	--	NS	--	--
	BAV1 Vinyl Chloride Reductase (BVC)	ND	U	0.5	NS	--	--	NS	--	--	NS	--	--	NS	--	--	NS	--	--
	Chloroform Reductase (CFR)	ND	U	5.2	NS	--	--	NS	--	--	NS	--	--	NS	--	--	NS	--	--
	Dehalobacter DCM (DCM)	ND	U	5.2	NS	--	--	NS	--	--	NS	--	--	NS	--	--	NS	--	--
	Dehalobacter spp. (DHBt)	129000		5.2	NS	--	--	NS	--	--	NS	--	--	NS	--	--	NS	--	--
	Dehalobium chlorocoercia (DECO)	6350		5.2	NS	--	--	NS	--	--	NS	--	--	NS	--	--	NS	--	--
	Dehalococcoides (DHC)	2.6		0.5	NS	--	--	NS	--	--	NS	--	--	NS	--	--	NS	--	--
	Dehalogenimonas spp. (DHG)	ND	U	5.2	NS	--	--	NS	--	--	NS	--	--	NS	--	--	NS	--	--
	Desulfitobacterium spp. (DSB)	129000		5.2	NS	--	--	NS	--	--	NS	--	--	NS	--	--	NS	--	--
	Desulfuromonas spp. (DSM)	ND	U	5.2	NS	--	--	NS	--	--	NS	--	--	NS	--	--	NS	--	--
	Dichloromethane Dehalogenase (DCMA)	ND	U	5.2	NS	--	--	NS	--	--	NS	--	--	NS	--	--	NS	--	--
	Epoxyalkane Transferase (EtnE)	ND	U	5.2	NS	--	--	NS	--	--	NS	--	--	NS	--	--	NS	--	--
	Ethene Monooxygenase (EtnC)	ND	U	5.2	NS	--	--	NS	--	--	NS	--	--	NS	--	--	NS	--	--
	Methanogens (MGN)	3080		5.2	NS	--	--	NS	--	--	NS	--	--	NS	--	--	NS	--	--
	PCE Reductase (PCE-1)	NS	--	--	NS	--	--	NS	--	--	NS	--	--	NS	--	--	NS	--	--
	Phenol Hydroxylase (PHE)	408000		5.2	NS	--	--	NS	--	--	NS	--	--	NS	--	--	NS	--	--
	PMMO	301		5.2	NS	--	--	NS	--	--	NS	--	--	NS	--	--	NS	--	--
	Soluble Methane Monooxygenase (SMMO)	1190		5.2	NS	--	--	NS	--	--	NS	--	--	NS	--	--	NS	--	--
	Sulfate Reducing Bacteria (APS)	73400		5.2	NS	--	--	NS	--	--	NS	--	--	NS	--	--	NS	--	--
	tceA Reductase (TCE)	1.3		0.5	NS	--	--	NS	--	--	NS	--	--	NS	--	--	NS	--	--
	Toluene Dioxygenase (TOD)	68.1		5.2	NS	--	--	NS	--	--	NS	--	--	NS	--	--	NS	--	--
	Toluene Monooxygenase (RMO)	521000		5.2	NS	--	--	NS	--	--	NS	--	--	NS	--	--	NS	--	--
	Toluene Monooxygenase 2 (RDEG)	124000		5.2	NS	--	--	NS	--	--	NS	--	--	NS	--	--	NS	--	--
	Total Eubacteria (EBAC)	12100000		5.2	NS	--	--	NS	--	--	NS	--	--	NS	--	--	NS	--	--
	trans-1,2-DCE Reductase (TDR)	NS	--	--	NS	--	--	NS	--	--	NS	--	--	NS	--	--	NS	--	--
	Trichlorobenzene Dioxygenase (TCBO)	79.8		5.2	NS	--	--	NS	--	--	NS	--	--	NS	--	--	NS	--	--
	Vinyl Chloride Reductase (VCR)	ND	U	0.5	NS	--	--	NS	--	--	NS	--	--	NS	--	--	NS	--	--
EDB (µg/L) EPA Method 8011	1,2-DIBROMOETHANE	42.5	J+	0.0189	84.9	J+	3.87	NS	--	--	NS	--	--	NS	--	--	NS	--	--
Fluorometric (µg/L) Spectrofluorophotometry	FLUORESCEIN	ND	U	0.01	ND	U	0.01	ND	U	0.01	207.7		0.01	16.789		0.01	1.535		0.01
Reduced Gases (µg/L) RSKSOP-175	ACETYLENE	ND	U	10	ND	U	10	NS	--	--	NS	--	--	NS	--	--	NS	--	--
	ETHANE	1.12	J	4	4.08		4	NS	--	--	NS	--	--	NS	--	--	NS	--	--
	ETHYLENE	8.67		5	19.2		5	NS	--	--	NS	--	--	NS	--	--	NS	--	--
	METHANE	23.2		2	19		2	NS	--	--	NS	--	--	NS	--	--	NS	--	--
	PROPANE	1.19	J	6	4.88	J	6	NS	--	--	NS	--	--	NS	--	--	NS	--	--
General Chemistry (mg/L) SM2320b, EPA Method 300, EPA Method 353.2, SM4500 PE	ALKALINITY	374	J-	1	326		1	NS	--	--	NS	--	--	NS	--	--	NS	--	--
	BROMIDE	0.306	J	0.25	0.283		0.125	NS	--	--	NS	--	--	NS	--	--	NS	--	--
	CHLORIDE	11.5		0.66	11.4		0.33	NS	--	--	NS	--	--	NS	--	--	NS	--	--
	IODIDE	ND	U	0.2	ND	U	0.75	NS	--	--	NS	--	--	NS	--	--	NS	--	--
	NITRATE	NS	--	--	NS	--	--	NS	--	--	NS	--	--	NS	--	--	NS	--	--
	NITRITE	NS	--	--	NS	--	--	NS	--	--	NS	--	--	NS	--	--	NS	--	--
	NITROGEN, NITRATE-NITRITE	ND	U	0.375	ND	U	0.375	NS	--	--	NS	--	--	NS	--	--	NS	--	--
	O-PHOSPHATE (AS P)	0.0608		0.02	0.0392	J	0.02	NS	--	--	NS	--	--	NS	--	--	NS	--	--
	SULFATE	ND	U	2	0.807		1	NS	--	--	NS	--	--	NS	--	--	NS	--	--
VFAs (mg/L) EPA Method 300m	ACETIC ACID	84.8		10	45		1	NS	--	--	NS	--	--	NS	--	--	NS	--	--
	BUTYRIC ACID	9.87		1	ND	U	1	NS	--	--	NS	--	--	NS	--	--	NS	--	--
	FORMIC ACID	ND	U	1	ND	U	1	NS	--	--	NS	--	--	NS	--	--	NS	--	--
	LACTIC ACID	ND	U	1	1.29		1	NS	--	--	NS	--	--	NS	--	--	NS	--	--
	PROPIONIC ACID	11.8		1	6.22		1	NS	--	--	NS	--	--	NS	--	--	NS	--	--
	PYRUVIC ACID	ND	U	1	ND	U	1	NS	--	--	NS	--	--	NS	--	--	NS	--	--
	VALERIC ACID	ND	U	1	ND	U	1	NS	--	--	NS	--	--	NS	--	--	NS	--	--

Table 15
Groundwater Analytical Results for KAFB-106MW2-S

	Phase Designation	Original Baseline[b]			New Baseline - QED Pumps[c]			Phase 1 Recirculation			Phase 1 Recirculation								
	Sample ID	106MW2S-BL-080717			106MW2S-BL-091917			106MW2S-P1R-100417			106MW2S-P1R-100617			106MW2S-P1R-100917			106MW2S-P1R-101217		
	Sample Date	8/7/2017			9/19/2017			10/4/2017			10/6/2017			10/9/2017			10/12/2017		
	Sample Pupose	REG			REG			REG			REG			REG			REG		
Chemical Class and Analytical Method[a]	**Parameter**	**Result**	**Val Qual**	**LOQ**	**Result**	**Val Qual**	**LOQ**	**Result**	**Val Qual**	**LOQ**	**Result**	**Val Qual**	**LOQ**	**Result**	**Val Qual**	**LOQ**	**Result**	**Val Qual**	**LOQ**
Dissolved Metals (mg/L) EPA Method 6010	IRON	12.8		0.06	11.7		0.06	NS	--	--	NS	--	--	NS	--	--	NS	--	--
	MANGANESE	5.52		0.006	5.19		0.006	NS	--	--	NS	--	--	NS	--	--	NS	--	--
δ2H (‰) Mass Spectrometry, USGS Reston, VA	DELTA2H	-96		-99	-95.38		-99	-94.21		-99	127.94		-99	-72.81		-99	-93.69		-99
CSIA EDB δ13C ‰) Kuder et al, 2012	EDB δ	-8.9 ±2‰	--	--	-8.7 ±2‰	--	--	NS	--	--	NS	--	--	NS	--	--	NS	--	--
VOCs (µg/L) EPA Method 8260	1,1,2-TRICHLOROETHANE	ND	U	10	ND	U	12.5	NS	--	--	NS	--	--	NS	--	--	NS	--	--
	1,2,4-TRIMETHYLBENZENE	105		10	110		12.5	NS	--	--	NS	--	--	NS	--	--	NS	--	--
	1,2-DIBROMOETHANE	54.7		10	106		12.5	NS	--	--	NS	--	--	NS	--	--	NS	--	--
	1,2-DICHLOROETHANE	ND	U	10	ND	U	12.5	NS	--	--	NS	--	--	NS	--	--	NS	--	--
	1,3,5-TRIMETHYLBENZENE	34.6		10	40.7		12.5	NS	--	--	NS	--	--	NS	--	--	NS	--	--
	2-BUTANONE	447		100	496		125	NS	--	--	NS	--	--	NS	--	--	NS	--	--
	2-CHLOROTOLUENE	ND	U	10	ND	U	12.5	NS	--	--	NS	--	--	NS	--	--	NS	--	--
	2-HEXANONE	754		50	906		62.5	NS	--	--	NS	--	--	NS	--	--	NS	--	--
	4-METHYL-2-PENTANONE	569		50	665		62.5	NS	--	--	NS	--	--	NS	--	--	NS	--	--
	ACETONE	2480		100	2340		125	NS	--	--	NS	--	--	NS	--	--	NS	--	--
	BENZENE	1390		10	586		12.5	NS	--	--	NS	--	--	NS	--	--	NS	--	--
	CARBON DISULFIDE	ND	U	10	ND	U	12.5	NS	--	--	NS	--	--	NS	--	--	NS	--	--
	CHLOROMETHANE	ND	U	10	ND	U	12.5	NS	--	--	NS	--	--	NS	--	--	NS	--	--
	DICHLORODIFLUOROMETHANE	ND	U	20	ND	U	25	NS	--	--	NS	--	--	NS	--	--	NS	--	--
	ETHYLBENZENE	245		10	209		12.5	NS	--	--	NS	--	--	NS	--	--	NS	--	--
	ISOPROPYLBENZENE	141		10	116		12.5	NS	--	--	NS	--	--	NS	--	--	NS	--	--
	METHYL TERT-BUTYL ETHER	ND	U	10	ND	U	12.5	NS	--	--	NS	--	--	NS	--	--	NS	--	--
	METHYLENE CHLORIDE	ND	U	20	ND	U	25	NS	--	--	NS	--	--	NS	--	--	NS	--	--
	NAPHTHALENE	81.6	J+	10	113		12.5	NS	--	--	NS	--	--	NS	--	--	NS	--	--
	N-BUTYLBENZENE	6.22	J	10	6.76	J	12.5	NS	--	--	NS	--	--	NS	--	--	NS	--	--
	N-PROPYLBENZENE	16.5	J	10	14.1	J	12.5	NS	--	--	NS	--	--	NS	--	--	NS	--	--
	P-ISOPROPYLTOLUENE	310		10	354		12.5	NS	--	--	NS	--	--	NS	--	--	NS	--	--
	SEC-BUTYLBENZENE	6.2	J	10	ND	U	12.5	NS	--	--	NS	--	--	NS	--	--	NS	--	--
	TERT-BUTYLBENZENE	ND	U	10	ND	U	12.5	NS	--	--	NS	--	--	NS	--	--	NS	--	--
	TOLUENE	2260		10	1540		12.5	NS	--	--	NS	--	--	NS	--	--	NS	--	--
	TRICHLOROETHENE	ND	U	10	ND	U	12.5	NS	--	--	NS	--	--	NS	--	--	NS	--	--
	TRICHLOROFLUOROMETHANE	ND	U	20	ND	U	25	NS	--	--	NS	--	--	NS	--	--	NS	--	--
	XYLENES	1350		30	1690		37.5	NS	--	--	NS	--	--	NS	--	--	NS	--	--

Notes:

a. EPA analytical methods listed are for the most recent sampling event.

b. Samples were collected using Geotech Bladder Pumps.

c. Samples were recollected (except for QuantArray-Chlor analysis) using replacement QED Bladder Pumps.

-- = Not applicable.

δ2H - Delta Deuterium.

0/00 - Per mille.

cells/mL = Cells per milliliter.

EPA = Environmental Protection Agency.

FD = Field duplicate.

ID = Identification.

J = Estimated value, concentration is less than LOQ but greater than laboratory method detection limit (DL).

J+ = Estimated value, concentration is less than LOQ but greater than laboratory method detection limit (DL); biased high.

J- = Estimated value, concentration is less than LOQ but greater than laboratory method detection limit (DL); biased low.

KAFB = Kirtland Air Force Base.

LOQ = Limit of Quantitation

µg/L = Microgram per liter.

mg/L = Milligram per liter.

NA = Not analyzed.

ND = Not detected.

NS = Not sampled.

REG = Regular/parent sample.

U = Analyte was not detected. The reported numerical value is at or below the LOQ.

UJ = Analyte was not detected. The reported value is estimated.

VAL QUAL = Validation qualifier.

VFA - Volatile fatty acid.

VOC = Volatile organic compound.

Table 15
Groundwater Analytical Results for KAFB-106MW2-S

	Phase Designation	Phase 1 Recirculation									Phase 1 Recirculation						Phase 1 Passive					
	Sample ID	106MW2S-P1R-101217-FD			106MW2S-P1R-101617			106MW2S-P1R-102017			106MW2S-P1R-102517			106MW2S-P1R-110117			106MW2S-P1P-111617			106MW2S-P1P-112817		
	Sample Date	10/12/2017			10/16/2017			10/20/2017			10/25/2017			11/1/2017			11/16/2017			11/28/2017		
	Sample Pupose	FD			REG			REG			REG			REG			REG			REG		
Chemical Class and Analytical Method[a]	**Parameter**	**Result**	**Val Qual**	**LOQ**	**Result**	**Val Qual**	**LOQ**	**Result**	**Val Qual**	**LOQ**	**Result**	**Val Qual**	**LOQ**	**Result**	**Val Qual**	**LOQ**	**Result**	**Val Qual**	**LOQ**	**Result**	**Val Qual**	**LOQ**
Microbial Community (cells/mL) QuantArray-Chlor	1,1 DCA Reductase (DCA)	NS	--	--	NS	--	--	NS	--	--	NS	--	--	NS	--	--	NS	--	--	ND	U	5
	1,2 DCA Reductase (DCAR)	NS	--	--	NS	--	--	NS	--	--	NS	--	--	NS	--	--	NS	--	--	ND	U	5
	BAV1 Vinyl Chloride Reductase (BVC)	NS	--	--	NS	--	--	NS	--	--	NS	--	--	NS	--	--	NS	--	--	ND	U	0.5
	Chloroform Reductase (CFR)	NS	--	--	NS	--	--	NS	--	--	NS	--	--	NS	--	--	NS	--	--	ND	U	5
	Dehalobacter DCM (DCM)	NS	--	--	NS	--	--	NS	--	--	NS	--	--	NS	--	--	NS	--	--	ND	U	5
	Dehalobacter spp. (DHBt)	NS	--	--	NS	--	--	NS	--	--	NS	--	--	NS	--	--	NS	--	--	15000		5
	Dehalobium chlorocoercia (DECO)	NS	--	--	NS	--	--	NS	--	--	NS	--	--	NS	--	--	NS	--	--	4610		5
	Dehalococcoides (DHC)	NS	--	--	NS	--	--	NS	--	--	NS	--	--	NS	--	--	NS	--	--	0.5	J	0.5
	Dehalogenimonas spp. (DHG)	NS	--	--	NS	--	--	NS	--	--	NS	--	--	NS	--	--	NS	--	--	ND	U	5
	Desulfitobacterium spp. (DSB)	NS	--	--	NS	--	--	NS	--	--	NS	--	--	NS	--	--	NS	--	--	43100		5
	Desulfuromonas spp. (DSM)	NS	--	--	NS	--	--	NS	--	--	NS	--	--	NS	--	--	NS	--	--	9.8		5
	Dichloromethane Dehalogenase (DCMA)	NS	--	--	NS	--	--	NS	--	--	NS	--	--	NS	--	--	NS	--	--	ND	U	5
	Epoxyalkane Transferase (EtnE)	NS	--	--	NS	--	--	NS	--	--	NS	--	--	NS	--	--	NS	--	--	ND	U	5
	Ethene Monooxygenase (EtnC)	NS	--	--	NS	--	--	NS	--	--	NS	--	--	NS	--	--	NS	--	--	ND	U	5
	Methanogens (MGN)	NS	--	--	NS	--	--	NS	--	--	NS	--	--	NS	--	--	NS	--	--	1470		5
	PCE Reductase (PCE-1)	NS	--	--	NS	--	--	NS	--	--	NS	--	--	NS	--	--	NS	--	--	NS	--	--
	Phenol Hydroxylase (PHE)	NS	--	--	NS	--	--	NS	--	--	NS	--	--	NS	--	--	NS	--	--	9650		5
	PMMO	NS	--	--	NS	--	--	NS	--	--	NS	--	--	NS	--	--	NS	--	--	ND	U	5
	Soluble Methane Monooxygenase (SMMO)	NS	--	--	NS	--	--	NS	--	--	NS	--	--	NS	--	--	NS	--	--	ND	U	5
	Sulfate Reducing Bacteria (APS)	NS	--	--	NS	--	--	NS	--	--	NS	--	--	NS	--	--	NS	--	--	124000		5
	tceA Reductase (TCE)	NS	--	--	NS	--	--	NS	--	--	NS	--	--	NS	--	--	NS	--	--	ND	U	0.5
	Toluene Dioxygenase (TOD)	NS	--	--	NS	--	--	NS	--	--	NS	--	--	NS	--	--	NS	--	--	ND	U	5
	Toluene Monooxygenase (RMO)	NS	--	--	NS	--	--	NS	--	--	NS	--	--	NS	--	--	NS	--	--	14600		5
	Toluene Monooxygenase 2 (RDEG)	NS	--	--	NS	--	--	NS	--	--	NS	--	--	NS	--	--	NS	--	--	6380		5
	Total Eubacteria (EBAC)	NS	--	--	NS	--	--	NS	--	--	NS	--	--	NS	--	--	NS	--	--	4850000		5
	trans-1,2-DCE Reductase (TDR)	NS	--	--	NS	--	--	NS	--	--	NS	--	--	NS	--	--	NS	--	--	NS	--	--
	Trichlorobenzene Dioxygenase (TCBO)	NS	--	--	NS	--	--	NS	--	--	NS	--	--	NS	--	--	NS	--	--	ND	U	5
	Vinyl Chloride Reductase (VCR)	NS	--	--	NS	--	--	NS	--	--	NS	--	--	NS	--	--	NS	--	--	ND	U	0.5
EDB (µg/L) EPA Method 8011	1,2-DIBROMOETHANE	NS	--	--	NS	--	--	NS	--	--	68		3.76	NS	--	--	32.1		3.89	15		1.92
Fluorometric (µg/L) Spectrofluorophotometry	FLUORESCEIN	1.527		0.01	2.485		0.01	3.547		0.01	4.53		0.01	7.517		0.01	5.964		0.01	5.133		0.01
Reduced Gases (µg/L) RSKSOP-175	ACETYLENE	NS	--	--	NS	--	--	NS	--	--	ND	U	10	NS	--	--	ND	U	10	ND	U	10
	ETHANE	NS	--	--	NS	--	--	NS	--	--	ND	U	4	NS	--	--	ND	U	4	ND	U	4
	ETHYLENE	NS	--	--	NS	--	--	NS	--	--	ND	U	5	NS	--	--	9.56		5	6.53		5
	METHANE	NS	--	--	NS	--	--	NS	--	--	ND	U	2	NS	--	--	30.1		2	351		2
	PROPANE	NS	--	--	NS	--	--	NS	--	--	ND	U	6	NS	--	--	ND	U	6	ND	U	6
General Chemistry (mg/L) SM2320b, EPA Method 300, EPA Method 353.2, SM4500 PE	ALKALINITY	NS	--	--	NS	--	--	NS	--	--	325		1	NS	--	--	338		1	349		1
	BROMIDE	NS	--	--	NS	--	--	NS	--	--	0.527		0.125	NS	--	--	0.61		0.25	0.751		0.25
	CHLORIDE	NS	--	--	NS	--	--	NS	--	--	44.7		0.33	NS	--	--	45.2		0.66	45.6		0.66
	IODIDE	NS	--	--	NS	--	--	NS	--	--	ND	U	0.75	NS	--	--	ND	U	0.75	ND	U	0.75
	NITRATE	NS	--	--	NS	--	--	NS	--	--	NS	--	--	NS	--	--	NS	--	--	NS	--	--
	NITRITE	NS	--	--	NS	--	--	NS	--	--	NS	--	--	NS	--	--	NS	--	--	NS	--	--
	NITROGEN, NITRATE-NITRITE	NS	--	--	NS	--	--	NS	--	--	ND	U	0.375	NS	--	--	ND	U	0.375	ND	U	0.375
	O-PHOSPHATE (AS P)	NS	--	--	NS	--	--	NS	--	--	0.107		0.02	NS	--	--	0.0281	J	0.02	0.0153	J	0.02
	SULFATE	NS	--	--	NS	--	--	NS	--	--	15		1	NS	--	--	ND	U	2	ND	U	2
VFAs (mg/L) EPA Method 300m	ACETIC ACID	NS	--	--	NS	--	--	NS	--	--	8.59		1	NS	--	--	39.9		1	67.8		1
	BUTYRIC ACID	NS	--	--	NS	--	--	NS	--	--	ND	U	1	NS	--	--	ND	U	1	2.95		1
	FORMIC ACID	NS	--	--	NS	--	--	NS	--	--	ND	U	1	NS	--	--	ND	U	1	ND	U	1
	LACTIC ACID	NS	--	--	NS	--	--	NS	--	--	ND	U	1	NS	--	--	ND	U	1	ND	U	1
	PROPIONIC ACID	NS	--	--	NS	--	--	NS	--	--	ND	U	1	NS	--	--	1.04		1	2.78		1
	PYRUVIC ACID	NS	--	--	NS	--	--	NS	--	--	ND	U	1	NS	--	--	ND	U	1	ND	U	1
	VALERIC ACID	NS	--	--	NS	--	--	NS	--	--	ND	U	1	NS	--	--	ND	U	1	ND	U	1

Table 15
Groundwater Analytical Results for KAFB-106MW2-S

	Phase Designation	Phase 1 Recirculation									Phase 1 Recirculation						Phase 1 Passive					
	Sample ID	106MW2S-P1R-101217-FD			106MW2S-P1R-101617			106MW2S-P1R-102017			106MW2S-P1R-102517			106MW2S-P1R-110117			106MW2S-P1P-111617			106MW2S-P1P-112817		
	Sample Date	10/12/2017			10/16/2017			10/20/2017			10/25/2017			11/1/2017			11/16/2017			11/28/2017		
	Sample Pupose	FD			REG			REG			REG			REG			REG			REG		
Chemical Class and Analytical Method[a]	Parameter	Result	Val Qual	LOQ	Result	Val Qual	LOQ	Result	Val Qual	LOQ	Result	Val Qual	LOQ	Result	Val Qual	LOQ	Result	Val Qual	LOQ	Result	Val Qual	LOQ
Dissolved Metals (mg/L) EPA Method 6010	IRON	NS	--	--	NS	--	--	NS	--	--	1.53		0.06	NS	--	--	1.77		0.06	4.17		0.06
	MANGANESE	NS	--	--	NS	--	--	NS	--	--	2.16		0.006	NS	--	--	2.48		0.006	3.14		0.006
δ2H (‰) Mass Spectrometry, USGS Reston, VA	DELTA2H	-93.42		-99	-92.61		-99	-91.61		-99	-90.59		-99	-85.76		-99	-87.39		-99	-86.24		-99
CSIA EDB δ13C ‰) Kuder et al, 2012	EDB δ	NS	--	--	NS	--	--	NS	--	--	NS	--	--	NS	--	--	NS	--	--	-1.6 ±2‰	--	--
VOCs (µg/L) EPA Method 8260	1,1,2-TRICHLOROETHANE	NS	--	--	NS	--	--	NS	--	--	ND	U	50	NS	--	--	ND	U	50	ND	U	25
	1,2,4-TRIMETHYLBENZENE	NS	--	--	NS	--	--	NS	--	--	194		50	NS	--	--	159		50	203		25
	1,2-DIBROMOETHANE	NS	--	--	NS	--	--	NS	--	--	86.5	J	50	NS	--	--	37.7	J	50	19.3	J	25
	1,2-DICHLOROETHANE	NS	--	--	NS	--	--	NS	--	--	ND	U	50	NS	--	--	ND	U	50	ND	U	25
	1,3,5-TRIMETHYLBENZENE	NS	--	--	NS	--	--	NS	--	--	74.2	J	50	NS	--	--	61.7	J	50	76.7		25
	2-BUTANONE	NS	--	--	NS	--	--	NS	--	--	ND	U	500	NS	--	--	ND	U	500	ND	U	250
	2-CHLOROTOLUENE	NS	--	--	NS	--	--	NS	--	--	ND	U	50	NS	--	--	ND	U	50	ND	U	25
	2-HEXANONE	NS	--	--	NS	--	--	NS	--	--	143	J	250	NS	--	--	ND	U	250	ND	U	125
	4-METHYL-2-PENTANONE	NS	--	--	NS	--	--	NS	--	--	ND	U	250	NS	--	--	ND	U	250	ND	U	125
	ACETONE	NS	--	--	NS	--	--	NS	--	--	701	J	500	NS	--	--	272	J-	500	177	J	250
	BENZENE	NS	--	--	NS	--	--	NS	--	--	2730		50	NS	--	--	2650		50	2870		25
	CARBON DISULFIDE	NS	--	--	NS	--	--	NS	--	--	ND	U	50	NS	--	--	ND	U	50	ND	U	25
	CHLOROMETHANE	NS	--	--	NS	--	--	NS	--	--	ND	U	50	NS	--	--	ND	U	50	ND	U	25
	DICHLORODIFLUOROMETHANE	NS	--	--	NS	--	--	NS	--	--	ND	U	100	NS	--	--	ND	U	100	ND	U	50
	ETHYLBENZENE	NS	--	--	NS	--	--	NS	--	--	512		50	NS	--	--	468		50	582		25
	ISOPROPYLBENZENE	NS	--	--	NS	--	--	NS	--	--	47	J	50	NS	--	--	90.2	J	50	132		25
	METHYL TERT-BUTYL ETHER	NS	--	--	NS	--	--	NS	--	--	ND	U	50	NS	--	--	ND	U	50	ND	U	25
	METHYLENE CHLORIDE	NS	--	--	NS	--	--	NS	--	--	ND	U	100	NS	--	--	ND	U	100	ND	U	50
	NAPHTHALENE	NS	--	--	NS	--	--	NS	--	--	83.7	J	50	NS	--	--	68.1	J	50	68.5		25
	N-BUTYLBENZENE	NS	--	--	NS	--	--	NS	--	--	ND	U	50	NS	--	--	ND	U	50	ND	U	25
	N-PROPYLBENZENE	NS	--	--	NS	--	--	NS	--	--	44.3	J	50	NS	--	--	31.7	J	50	43.5	J	25
	P-ISOPROPYLTOLUENE	NS	--	--	NS	--	--	NS	--	--	118		50	NS	--	--	112		50	125		25
	SEC-BUTYLBENZENE	NS	--	--	NS	--	--	NS	--	--	ND	U	50	NS	--	--	ND	U	50	ND	U	25
	TERT-BUTYLBENZENE	NS	--	--	NS	--	--	NS	--	--	ND	U	50	NS	--	--	ND	U	50	ND	U	25
	TOLUENE	NS	--	--	NS	--	--	NS	--	--	4740		50	NS	--	--	3580		50	4210		25
	TRICHLOROETHENE	NS	--	--	NS	--	--	NS	--	--	ND	U	50	NS	--	--	38.2	J	50	ND	U	25
	TRICHLOROFLUOROMETHANE	NS	--	--	NS	--	--	NS	--	--	ND	U	100	NS	--	--	ND	U	100	ND	U	50
	XYLENES	NS	--	--	NS	--	--	NS	--	--	1970		150	NS	--	--	1680		150	2070		75

Notes:

a. EPA analytical methods listed are for the most recent sampling event.

b. Samples were collected using Geotech Bladder Pumps.

c. Samples were recollected (except for QuantArray-Chlor analysis) using replacement QED Bladder Pumps.

-- = Not applicable.

δ2H - Delta Deuterium.

0/00 - Per mille.

cells/mL = Cells per milliliter.

EPA = Environmental Protection Agency.

FD = Field duplicate.

ID = Identification.

J = Estimated value, concentration is less than LOQ but greater than laboratory method detection limit (DL).

J+ = Estimated value, concentration is less than LOQ but greater than laboratory method detection limit (DL); biased high.

J- = Estimated value, concentration is less than LOQ but greater than laboratory method detection limit (DL); biased low.

KAFB = Kirtland Air Force Base.

LOQ = Limit of Quantitation

µg/L = Microgram per liter.

mg/L = Milligram per liter.

NA = Not analyzed.

ND = Not detected.

NS = Not sampled.

REG = Regular/parent sample.

U = Analyte was not detected. The reported numerical value is at or below the LOQ.

UJ = Analyte was not detected. The reported value is estimated.

VAL QUAL = Validation qualifier.

VFA - Volatile fatty acid.

VOC = Volatile organic compound.

Table 15
Groundwater Analytical Results for KAFB-106MW2-S

	Phase Designation	Phase 2 Recirculation			Phase 2 Recirculation						Phase 2 Passive								
	Sample ID	106MW2S-P2R-010918			106MW2S-P2R-011618			106MW2S-P2R-012418			106MW2S-P2P-030718			106MW2S-P2P-041018			106MW2S-P2P-041018-FD		
	Sample Date	1/9/2018			1/16/2018			1/24/2018			3/7/2018			4/10/2018			4/10/2018		
	Sample Pupose	REG			REG			REG			REG			REG			FD		
Chemical Class and Analytical Method[a]	Parameter	Result	Val Qual	LOQ	Result	Val Qual	LOQ	Result	Val Qual	LOQ	Result	Val Qual	LOQ	Result	Val Qual	LOQ	Result	Val Qual	LOQ
Microbial Community (cells/mL) QuantArray-Chlor	1,1 DCA Reductase (DCA)	NS	--	--	NS	--	--	ND	U	5.7	NS	--	--	NS	--	--	NS	--	--
	1,2 DCA Reductase (DCAR)	NS	--	--	NS	--	--	ND	U	5.7	NS	--	--	NS	--	--	NS	--	--
	BAV1 Vinyl Chloride Reductase (BVC)	NS	--	--	NS	--	--	ND	U	0.6	NS	--	--	NS	--	--	NS	--	--
	Chloroform Reductase (CFR)	NS	--	--	NS	--	--	ND	U	5.7	NS	--	--	NS	--	--	NS	--	--
	Dehalobacter DCM (DCM)	NS	--	--	NS	--	--	626		5.7	NS	--	--	NS	--	--	NS	--	--
	Dehalobacter spp. (DHBt)	NS	--	--	NS	--	--	67200		5.7	NS	--	--	NS	--	--	NS	--	--
	Dehalobium chlorocoercia (DECO)	NS	--	--	NS	--	--	12300		5.7	NS	--	--	NS	--	--	NS	--	--
	Dehalococcoides (DHC)	NS	--	--	NS	--	--	ND	U	0.6	NS	--	--	NS	--	--	NS	--	--
	Dehalogenimonas spp. (DHG)	NS	--	--	NS	--	--	370		5.7	NS	--	--	NS	--	--	NS	--	--
	Desulfitobacterium spp. (DSB)	NS	--	--	NS	--	--	39800		5.7	NS	--	--	NS	--	--	NS	--	--
	Desulfuromonas spp. (DSM)	NS	--	--	NS	--	--	86.6		5.7	NS	--	--	NS	--	--	NS	--	--
	Dichloromethane Dehalogenase (DCMA)	NS	--	--	NS	--	--	ND	U	5.7	NS	--	--	NS	--	--	NS	--	--
	Epoxyalkane Transferase (EtnE)	NS	--	--	NS	--	--	ND	U	5.7	NS	--	--	NS	--	--	NS	--	--
	Ethene Monooxygenase (EtnC)	NS	--	--	NS	--	--	ND	U	5.7	NS	--	--	NS	--	--	NS	--	--
	Methanogens (MGN)	NS	--	--	NS	--	--	91.2		5.7	NS	--	--	NS	--	--	NS	--	--
	PCE Reductase (PCE-1)	NS	--	--	NS	--	--	ND	U	5.7	NS	--	--	NS	--	--	NS	--	--
	Phenol Hydroxylase (PHE)	NS	--	--	NS	--	--	16600		5.7	NS	--	--	NS	--	--	NS	--	--
	PMMO	NS	--	--	NS	--	--	NS	--	--	NS	--	--	NS	--	--	NS	--	--
	Soluble Methane Monooxygenase (SMMO)	NS	--	--	NS	--	--	418		5.7	NS	--	--	NS	--	--	NS	--	--
	Sulfate Reducing Bacteria (APS)	NS	--	--	NS	--	--	140000		5.7	NS	--	--	NS	--	--	NS	--	--
	tceA Reductase (TCE)	NS	--	--	NS	--	--	ND	U	0.6	NS	--	--	NS	--	--	NS	--	--
	Toluene Dioxygenase (TOD)	NS	--	--	NS	--	--	ND	U	5.7	NS	--	--	NS	--	--	NS	--	--
	Toluene Monooxygenase (RMO)	NS	--	--	NS	--	--	14000		5.7	NS	--	--	NS	--	--	NS	--	--
	Toluene Monooxygenase 2 (RDEG)	NS	--	--	NS	--	--	6110		5.7	NS	--	--	NS	--	--	NS	--	--
	Total Eubacteria (EBAC)	NS	--	--	NS	--	--	4160000		5.7	NS	--	--	NS	--	--	NS	--	--
	trans-1,2-DCE Reductase (TDR)	NS	--	--	NS	--	--	ND	U	5.7	NS	--	--	NS	--	--	NS	--	--
	Trichlorobenzene Dioxygenase (TCBO)	NS	--	--	NS	--	--	ND	U	5.7	NS	--	--	NS	--	--	NS	--	--
	Vinyl Chloride Reductase (VCR)	NS	--	--	NS	--	--	ND	U		NS	--	--	NS	--	--	NS	--	--
EDB (µg/L) EPA Method 8011	1,2-DIBROMOETHANE	54.9		1.9	77.7		1.91	68.1		1.92	8.25	J+	1.92	0.154		0.0192	0.139		0.0191
Fluorometric (µg/L) Spectrofluorophotometry	FLUORESCEIN	NS	--	--	NS	--	--	NS	--	--	NS	--	--	NS	--	--	NS	--	--
Reduced Gases (µg/L) RSKSOP-175	ACETYLENE	ND	U	10	ND	U	10	ND	U	10	ND	U	10	ND	U	10	ND	U	10
	ETHANE	2.02	J	4	1.8	J	4	1.59	J	4	1.7	J	4	1.02	J	4	0.97	J	4
	ETHYLENE	6.34		5	6.12		5	5.73		5	8.9		5	5.5		5	5.02		5
	METHANE	11.3		2	8.47		2	12.4		2	3110		20	11800		20	11600		20
	PROPANE	1.95	J	6	ND	U	6	ND	U	6	1.7	J	6	1.39	J	6	1.2	J	6
General Chemistry (mg/L) SM2320b, EPA Method 300, EPA Method 353.2, SM4500 PE	ALKALINITY	372	J-	1	343		1	334		1	375		1	399		1	382		1
	BROMIDE	0.465	J	0.25	0.608		0.25	0.553		0.25	0.798	J	0.625	0.561		0.25	0.567		0.25
	CHLORIDE	50.2		0.66	52.5	J+	0.66	49		0.66	48		1.65	49.5		0.66	49.8		0.66
	IODIDE	9.4		0.75	16		0.75	17		0.75	19		0.75	18		0.75	19		0.75
	NITRATE	NS	--	--	NS	--	--	NS	--	--	NS	--	--	ND	U	0.2	ND	U	0.2
	NITRITE	NS	--	--	NS	--	--	NS	--	--	NS	--	--	ND	U	0.2	ND	U	0.2
	NITROGEN, NITRATE-NITRITE	ND	U	0.375	ND	U	0.375	ND	U	0.375	ND	U	0.375	NS	--	--	NS	--	--
	O-PHOSPHATE (AS P)	0.113		0.02	0.285		0.02	0.718		0.02	0.846	J-	0.02	0.623		0.02	0.571		0.04
	SULFATE	1.96	J	2	1.16	J+	2	ND	U	2	ND	U	5	ND	U	2	ND	U	2
VFAs (mg/L) EPA Method 300m	ACETIC ACID	75.2		1	97.2		1	33.8		1	151		10	113.5		10	118.4		10
	BUTYRIC ACID	ND	U	1	ND	U	1	0.39	J	1	11.8		1	ND	U	1	ND	U	1
	FORMIC ACID	ND	U	1	ND	U	1	ND	U	1	ND	U	1	2.1		1	2.8		1
	LACTIC ACID	2.04		1	ND	U	1	0.52	J	1	ND	U	1	ND	U	1	1		1
	PROPIONIC ACID	13.2		1	24.4		1	10		1	32		1	25.8		10	27.9		10
	PYRUVIC ACID	ND	U	1	ND	U	1	ND	U	1	1.1		1	ND	U	1	ND	U	1
	VALERIC ACID	ND	U	1	ND	U	1	ND	U	1	2.6		1	1.1		1	2.3		1

Table 15
Groundwater Analytical Results for KAFB-106MW2-S

	Phase Designation	Phase 2 Recirculation			Phase 2 Recirculation						Phase 2 Passive								
	Sample ID	106MW2S-P2R-010918			106MW2S-P2R-011618			106MW2S-P2R-012418			106MW2S-P2P-030718			106MW2S-P2P-041018			106MW2S-P2P-041018-FD		
	Sample Date	1/9/2018			1/16/2018			1/24/2018			3/7/2018			4/10/2018			4/10/2018		
	Sample Pupose	REG			REG			REG			REG			REG			FD		
Chemical Class and Analytical Method[a]	Parameter	Result	Val Qual	LOQ	Result	Val Qual	LOQ	Result	Val Qual	LOQ	Result	Val Qual	LOQ	Result	Val Qual	LOQ	Result	Val Qual	LOQ
Dissolved Metals (mg/L) EPA Method 6010	IRON	3.85	J-	0.06	4.08		0.06	4.93	J-	0.06	11		0.06	12.3	J-	0.06	12.1	J-	0.06
	MANGANESE	4.99		0.006	5.91		0.006	6.81	J-	0.006	8.79		0.006	9.47	J+	0.006	9.42	J+	0.006
δ2H (‰) Mass Spectrometry, USGS Reston, VA	DELTA2H	NS	--	--	NS	--	--	NS	--	--	NS	--	--	NS	--	--	NS	--	--
CSIA EDB δ13C ‰) Kuder et al, 2012	EDB δ	NS	--	--	NS	--	--	-11.7 ±2‰	--	--	NS	--	--	NS	--	--	NS	--	--
VOCs (µg/L) EPA Method 8260	1,1,2-TRICHLOROETHANE	ND	U	25	ND	U	50	ND	U	50	ND	U	50	ND	U	50	ND	U	50
	1,2,4-TRIMETHYLBENZENE	253		25	258		50	291		50	193		50	194		50	189		50
	1,2-DIBROMOETHANE	71.1		25	66.3	J	50	55.4	J	50	ND	U	50	ND	U	50	ND	U	50
	1,2-DICHLOROETHANE	ND	U	25	ND	U	50	ND	U	50	ND	U	50	ND	U	50	ND	U	50
	1,3,5-TRIMETHYLBENZENE	98.8		25	98.9	J	50	106		50	78.2	J	50	70.3	J	50	69.2	J	50
	2-BUTANONE	ND	U	250	ND	U	500	ND	U	500	ND	U	500	ND	U	500	ND	U	500
	2-CHLOROTOLUENE	ND	U	25	ND	U	50	ND	U	50	ND	U	50	ND	U	50	ND	U	50
	2-HEXANONE	120	J	125	ND	U	250	ND	U	250	ND	U	250	ND	U	250	ND	U	250
	4-METHYL-2-PENTANONE	88.6	J	125	ND	U	250	ND	U	250	ND	U	250	ND	U	250	ND	U	250
	ACETONE	371	J	250	450	J	500	256	J	500	ND	U	500	379	J	500	343	J	500
	BENZENE	3240		25	3430		50	3820		50	3240		50	2360		50	2210		50
	CARBON DISULFIDE	ND	U	25	ND	U	50	ND	U	50	ND	U	50	ND	U	50	ND	U	50
	CHLOROMETHANE	ND	U	25	ND	U	50	ND	U	50	ND	U	50	ND	U	50	ND	U	50
	DICHLORODIFLUOROMETHANE	ND	U	50	ND	U	100	ND	U	100	ND	U	100	ND	U	100	ND	U	100
	ETHYLBENZENE	729		25	739		50	912		50	677		50	628		50	591		50
	ISOPROPYLBENZENE	77.5		25	73.6	J	50	101		50	139		50	150		50	150		50
	METHYL TERT-BUTYL ETHER	ND	U	25	ND	U	50	ND	U	50	ND	U	50	ND	U	50	ND	U	50
	METHYLENE CHLORIDE	ND	U	50	ND	U	100	ND	U	100	ND	U	100	ND	U	100	ND	U	100
	NAPHTHALENE	90.1		25	79.4	J	50	88.8	J	50	54.3	J	50	78.6	J	50	80.1	J	50
	N-BUTYLBENZENE	12.6	J	25	ND	U	50	ND	U	50	ND	U	50	ND	U	50	ND	U	50
	N-PROPYLBENZENE	62.7		25	58.6	J	50	71.5	J	50	43.4	J	50	52.4	J	50	50.4	J	50
	P-ISOPROPYLTOLUENE	146		25	138		50	ND	U	50	ND	U	50	83.4	J	50	81.7	J	50
	SEC-BUTYLBENZENE	14.9	J	25	ND	U	50	ND	U	50	ND	U	50	ND	U	50	ND	U	50
	TERT-BUTYLBENZENE	ND	U	25	ND	U	50	ND	U	50	ND	U	50	ND	U	50	ND	U	50
	TOLUENE	6070		25	7440		50	8920		50	6980		50	5440		50	5190		50
	TRICHLOROETHENE	ND	U	25	ND	U	50	ND	U	50	ND	U	50	ND	U	50	ND	U	50
	TRICHLOROFLUOROMETHANE	ND	U	50	ND	U	100	ND	U	100	ND	U	100	ND	U	100	ND	U	100
	XYLENES	2240		75	2430		150	2900		150	2160		150	1870		150	1810		150

Notes:

a. EPA analytical methods listed are for the most recent sampling event.

b. Samples were collected using Geotech Bladder Pumps.

c. Samples were recollected (except for QuantArray-Chlor analysis) using replacement QED Bladder Pumps.

-- = Not applicable.

δ2H - Delta Deuterium.

0/00 - Per mille.

cells/mL = Cells per milliliter.

EPA = Environmental Protection Agency.

FD = Field duplicate.

ID = Identification.

J = Estimated value, concentration is less than LOQ but greater than laboratory method detection limit (DL).

J+ = Estimated value, concentration is less than LOQ but greater than laboratory method detection limit (DL); biased high.

J- = Estimated value, concentration is less than LOQ but greater than laboratory method detection limit (DL); biased low.

KAFB = Kirtland Air Force Base.

LOQ = Limit of Quantitation

µg/L = Microgram per liter.

mg/L = Milligram per liter.

NA = Not analyzed.

ND = Not detected.

NS = Not sampled.

REG = Regular/parent sample.

U = Analyte was not detected. The reported numerical value is at or below the LOQ.

UJ = Analyte was not detected. The reported value is estimated.

VAL QUAL = Validation qualifier.

VFA - Volatile fatty acid.

VOC = Volatile organic compound.

Table 15
Groundwater Analytical Results for KAFB-106MW2-S

	Phase Designation	Phase 2 Passive						Phase 3 Recirculation									Phase 3 Recirculation		
	Sample ID	106MW2S-P2P-050918			106MW2S-P2P-061418			106MW2S-P3R-080718			106MW2S-P3R-081518			106MW2S-P3R-082118			106MW2S-P3R-082818		
	Sample Date	5/9/2018			6/14/2018			8/7/2018			8/15/2018			8/21/2018			8/28/2018		
	Sample Pupose	REG			REG			REG			REG			REG			REG		
Chemical Class and Analytical Method[a]	Parameter	Result	Val Qual	LOQ	Result	Val Qual	LOQ	Result	Val Qual	LOQ	Result	Val Qual	LOQ	Result	Val Qual	LOQ	Result	Val Qual	LOQ
Microbial Community (cells/mL) QuantArray-Chlor	1,1 DCA Reductase (DCA)	ND	U	9.4	NS	--	--	NS	--	--	NS	--	--	ND	U	5	NS	--	--
	1,2 DCA Reductase (DCAR)	ND	U	9.4	NS	--	--	NS	--	--	NS	--	--	ND	U	5	NS	--	--
	BAV1 Vinyl Chloride Reductase (BVC)	ND	U	0.9	NS	--	--	NS	--	--	NS	--	--	ND	U	0.5	NS	--	--
	Chloroform Reductase (CFR)	ND	U	9.4	NS	--	--	NS	--	--	NS	--	--	ND	U	5	NS	--	--
	Dehalobacter DCM (DCM)	ND	U	9.4	NS	--	--	NS	--	--	NS	--	--	954		5	NS	--	--
	Dehalobacter spp. (DHBt)	58500		9.4	NS	--	--	NS	--	--	NS	--	--	51000		5	NS	--	--
	Dehalobium chlorocoercia (DECO)	5330		9.4	NS	--	--	NS	--	--	NS	--	--	21100		5	NS	--	--
	Dehalococcoides (DHC)	ND	U	0.9	NS	--	--	NS	--	--	NS	--	--	ND	U	0.5	NS	--	--
	Dehalogenimonas spp. (DHG)	6490		9.4	NS	--	--	NS	--	--	NS	--	--	ND	U	5	NS	--	--
	Desulfitobacterium spp. (DSB)	23300		9.4	NS	--	--	NS	--	--	NS	--	--	127000		5	NS	--	--
	Desulfuromonas spp. (DSM)	122		9.4	NS	--	--	NS	--	--	NS	--	--	36.3		5	NS	--	--
	Dichloromethane Dehalogenase (DCMA)	ND	U	9.4	NS	--	--	NS	--	--	NS	--	--	ND	U	5	NS	--	--
	Epoxyalkane Transferase (EtnE)	48.9		9.4	NS	--	--	NS	--	--	NS	--	--	831		5	NS	--	--
	Ethene Monooxygenase (EtnC)	ND	U	9.4	NS	--	--	NS	--	--	NS	--	--	ND	U	5	NS	--	--
	Methanogens (MGN)	77100		9.4	NS	--	--	NS	--	--	NS	--	--	893		5	NS	--	--
	PCE Reductase (PCE-1)	ND	U	9.4	NS	--	--	NS	--	--	NS	--	--	ND	U	5	NS	--	--
	Phenol Hydroxylase (PHE)	4870		9.4	NS	--	--	NS	--	--	NS	--	--	41200		5	NS	--	--
	PMMO	NS	--	--	NS	--	--	NS	--	--	NS	--	--	NS	--	--	NS	--	--
	Soluble Methane Monooxygenase (SMMO)	303		9.4	NS	--	--	NS	--	--	NS	--	--	198		5	NS	--	--
	Sulfate Reducing Bacteria (APS)	76000		9.4	NS	--	--	NS	--	--	NS	--	--	238000		5	NS	--	--
	tceA Reductase (TCE)	ND	U	0.9	NS	--	--	NS	--	--	NS	--	--	ND	U	0.5	NS	--	--
	Toluene Dioxygenase (TOD)	ND	U	9.4	NS	--	--	NS	--	--	NS	--	--	152		5	NS	--	--
	Toluene Monooxygenase (RMO)	4290		9.4	NS	--	--	NS	--	--	NS	--	--	269000		5	NS	--	--
	Toluene Monooxygenase 2 (RDEG)	3240		9.4	NS	--	--	NS	--	--	NS	--	--	23600		5	NS	--	--
	Total Eubacteria (EBAC)	9060000		9.4	NS	--	--	NS	--	--	NS	--	--	22300000		5	NS	--	--
	trans-1,2-DCE Reductase (TDR)	ND	U	9.4	NS	--	--	NS	--	--	NS	--	--	ND	U	5	NS	--	--
	Trichlorobenzene Dioxygenase (TCBO)	ND	U	9.4	NS	--	--	NS	--	--	NS	--	--	ND	U	5	NS	--	--
	Vinyl Chloride Reductase (VCR)	ND	U		NS	--	--	NS	--	--	NS	--	--	ND	U		NS	--	--
EDB (µg/L) EPA Method 8011	1,2-DIBROMOETHANE	0.0331	J	0.0189	ND	U	0.0191	NA	--	--	8.5		0.031	6.7	J	0.029	0.57		0.003
Fluorometric (µg/L) Spectrofluorophotometry	FLUORESCEIN	NS	--	--	NS	--	--	NS	--	--	NS	--	--	NS	--	--	NS	--	--
Reduced Gases (µg/L) RSKSOP-175	ACETYLENE	ND	U	10	ND	UJ	10	ND	U	10	ND	U	10	ND	U	10	ND	U	10
	ETHANE	0.95	J	4	0.9	J	4	2.1		4	1.8	J	4	2	J	4	2.1	J	4
	ETHYLENE	3.45	J	5	2.6	J	5	8.4		5	11.1		5	11.1		5	9.1		5
	METHANE	11800		20	10800	J	20	4728.7		2	4434.8		2	5542.2		2	7211.5		2
	PROPANE	ND	U	6	1.1	J	6	2.9	J	6	2.3	J	6	2.4	J	6	2.5	J	6
General Chemistry (mg/L) SM2320b, EPA Method 300, EPA Method 353.2, SM4500 PE	ALKALINITY	517		1	526	J-	1	NA	--	--	390		5	420		5	460		5
	BROMIDE	0.556		0.25	0.412	J	0.625	NA	--	--	1.3		0.5	1.4		0.5	1		0.5
	CHLORIDE	52.3		0.66	52.7		1.65	NA	--	--	52		0.5	52		0.5	53		0.5
	IODIDE	21		1.5	19		1.5	3.8		0.75	4.2		0.75	4.1		0.75	4.5		0.75
	NITRATE	ND	U	0.2	ND	U	0.5	NA	--	--	NS	--	--	NS	--	--	NS	--	--
	NITRITE	ND	U	0.2	ND	U	0.5	NA	--	--	NS	--	--	NS	--	--	NS	--	--
	NITROGEN, NITRATE-NITRITE	NS	--	--	NS	--	--	NA	--	--	0.099		0.05	ND		0.05	ND	U	0.05
	O-PHOSPHATE (AS P)	0.334		0.02	0.399		0.04	NA	--	--	ND	U	0.15	0.15	J	0.15	1.1		0.15
	SULFATE	ND	U	2	ND	U	5	NA	--	--	0.89	J	1	2.9		1	ND	U	1
VFAs (mg/L) EPA Method 300m	ACETIC ACID	15.7		1	4.7	J	1	80.2		10	102.2		10	60.8		10	45.2		10
	BUTYRIC ACID	ND	U	1	ND	UJ	1	ND	U	1	ND	U	1	ND	U	1	ND	U	1
	FORMIC ACID	ND	U	1	ND	UJ	1	1.6	J	10	ND	U	1	1	J	10	0.3	J	1
	LACTIC ACID	0.75	J	1	0.4	J	1	3.4	J	10	0.6	J	1	1.5		1	0.4	J	1
	PROPIONIC ACID	12.8		1	ND	UJ	1	29.9		10	43.6		10	56.3		10	55.5		10
	PYRUVIC ACID	ND	U	1	ND	UJ	1	ND	U	1	ND	U	1	ND	U	1	ND	U	1
	VALERIC ACID	ND	U	1	ND	UJ	1	ND	U	1	ND	U	1	ND	U	1	ND	U	1

Table 15
Groundwater Analytical Results for KAFB-106MW2-S

	Phase Designation	Phase 2 Passive						Phase 3 Recirculation									Phase 3 Recirculation		
	Sample ID	106MW2S-P2P-050918			106MW2S-P2P-061418			106MW2S-P3R-080718			106MW2S-P3R-081518			106MW2S-P3R-082118			106MW2S-P3R-082818		
	Sample Date	5/9/2018			6/14/2018			8/7/2018			8/15/2018			8/21/2018			8/28/2018		
	Sample Pupose	REG			REG			REG			REG			REG			REG		
Chemical Class and Analytical Method[a]	**Parameter**	**Result**	**Val Qual**	**LOQ**	**Result**	**Val Qual**	**LOQ**	**Result**	**Val Qual**	**LOQ**	**Result**	**Val Qual**	**LOQ**	**Result**	**Val Qual**	**LOQ**	**Result**	**Val Qual**	**LOQ**
Dissolved Metals (mg/L) EPA Method 6010	IRON	13.4		0.06	13		0.06	NA	--	--	8.2		0.05	7.9		0.05	8.2		0.05
	MANGANESE	9.26		0.006	9.33		0.006	NA	--	--	10		0.003	10		0.003	10		0.003
δ2H (‰) Mass Spectrometry, USGS Reston, VA	DELTA2H	NS	--	--	NS	--	--	NS	--	--	NS	--	--	NS	--	--	NS	--	--
CSIA EDB δ13C ‰) Kuder et al, 2012	EDB δ	NS	--	--	NS	--	--	NS	--	--	NS	--	--	-9.05 ±1.5‰	--	--	NS	--	--
VOCs (µg/L) EPA Method 8260	1,1,2-TRICHLOROETHANE	ND	U	2.5	ND	U	50	NA	--	--	ND	U	25	ND	U	10	ND	U	25
	1,2,4-TRIMETHYLBENZENE	185		2.5	218		50	NA	--	--	300		50	210		20	220		50
	1,2-DIBROMOETHANE	ND	U	2.5	ND	U	50	NA	--	--	ND	U	50	ND	U	20	ND	U	50
	1,2-DICHLOROETHANE	ND	U	2.5	ND	U	50	NA	--	--	ND	U	50	ND	U	20	ND	U	50
	1,3,5-TRIMETHYLBENZENE	65.8		2.5	78.4	J	50	NA	--	--	100		25	81		10	79		25
	2-BUTANONE	45.1	J	25	ND	U	500	NA	--	--	ND	U	500	ND	U	200	ND	U	500
	2-CHLOROTOLUENE	ND	U	2.5	ND	U	50	NA	--	--	ND	U	25	ND	U	10	ND	U	25
	2-HEXANONE	63.4		12.5	ND	U	250	NA	--	--	ND	U	250	67	J	100	ND	U	250
	4-METHYL-2-PENTANONE	52.8		12.5	ND	U	250	NA	--	--	ND	U	250	54	J	100	ND	U	250
	ACETONE	65.5		25	ND	U	500	NA	--	--	ND	U	500	200		200	ND	U	500
	BENZENE	1680		12.5	2640		50	NA	--	--	3600		50	2700		20	2800		50
	CARBON DISULFIDE	ND	U	2.5	ND	U	50	NA	--	--	ND	U	100	ND	U	40	ND	U	100
	CHLOROMETHANE	ND	U	2.5	ND	U	50	NA	--	--	ND	U	50	ND	U	20	ND	U	50
	DICHLORODIFLUOROMETHANE	ND	U	5	ND	U	100	NA	--	--	ND	U	50	ND	U	20	ND	U	50
	ETHYLBENZENE	506	J-	2.5	691		50	NA	--	--	860		50	650		20	690		50
	ISOPROPYLBENZENE	134		2.5	183		50	NA	--	--	89		50	71		20	73		50
	METHYL TERT-BUTYL ETHER	ND	U	2.5	ND	U	50	NA	--	--	ND	U	25	ND	U	10	ND	U	25
	METHYLENE CHLORIDE	ND	U	5	ND	U	100	NA	--	--	ND	U	250	ND	U	100	150	J	250
	NAPHTHALENE	89.6		2.5	69.1	J	50	NA	--	--	140	J	250	110		100	ND	U	250
	N-BUTYLBENZENE	7.13		2.5	ND	U	50	NA	--	--	ND	U	50	11	J	20	ND	U	50
	N-PROPYLBENZENE	47.8		2.5	52.4	J	50	NA	--	--	72		50	57		20	58		50
	P-ISOPROPYLTOLUENE	77.4		2.5	87.7	J	50	NA	--	--	110		50	88		20	81		50
	SEC-BUTYLBENZENE	8.23		2.5	ND	U	50	NA	--	--	ND	U	50	10	J	20	ND	U	50
	TERT-BUTYLBENZENE	ND	U	2.5	ND	U	50	NA	--	--	ND	U	50	ND	U	20	ND	U	50
	TOLUENE	3600		12.5	6020		50	NA	--	--	8000		50	6000		50	6600		50
	TRICHLOROETHENE	ND	U	2.5	82.5	J	50	NA	--	--	ND	U	50	ND	U	20	ND	U	50
	TRICHLOROFLUOROMETHANE	ND	U	5	ND	U	100	NA	--	--	ND	U	50	ND	U	20	ND	U	50
	XYLENES	1510	J-	7.5	2240		150	NA	--	--	2800		25	2100		10	2300		25

Notes:

a. EPA analytical methods listed are for the most recent sampling event.

b. Samples were collected using Geotech Bladder Pumps.

c. Samples were recollected (except for QuantArray-Chlor analysis) using replacement QED Bladder Pumps.

-- = Not applicable.

δ2H - Delta Deuterium.

0/00 - Per mille.

cells/mL = Cells per milliliter.

EPA = Environmental Protection Agency.

FD = Field duplicate.

ID = Identification.

J = Estimated value, concentration is less than LOQ but greater than laboratory method detection limit (DL).

J+ = Estimated value, concentration is less than LOQ but greater than laboratory method detection limit (DL); biased high.

J- = Estimated value, concentration is less than LOQ but greater than laboratory method detection limit (DL); biased low.

KAFB = Kirtland Air Force Base.

LOQ = Limit of Quantitation

µg/L = Microgram per liter.

mg/L = Milligram per liter.

NA = Not analyzed.

ND = Not detected.

NS = Not sampled.

REG = Regular/parent sample.

U = Analyte was not detected. The reported numerical value is at or below the LOQ.

UJ = Analyte was not detected. The reported value is estimated.

VAL QUAL = Validation qualifier.

VFA - Volatile fatty acid.

VOC = Volatile organic compound.

Table 15
Groundwater Analytical Results for KAFB-106MW2-S

	Phase Designation	Phase 3 Passive									Phase 4 Passive		
	Sample ID	106MW2S-P3P-091118			106MW2S-P3P-100218			106MW2S-P3P-111518			106MW2S-P4P-0111719		
	Sample Date	9/11/2018			10/2/2018			11/15/2018			1/17/2019		
	Sample Pupose	REG			REG			REG			REG		
Chemical Class and Analytical Method[a]	Parameter	Result	Val Qual	LOQ	Result	Val Qual	LOQ	Result	Val Qual	LOQ	Result	Val Qual	LOQ
Microbial Community (cells/mL) QuantArray-Chlor	1,1 DCA Reductase (DCA)	NS	--	--	NS	--	--	ND	U	26.3	ND	U	14.3
	1,2 DCA Reductase (DCAR)	NS	--	--	NS	--	--	ND	U	26.3	ND	U	14.3
	BAV1 Vinyl Chloride Reductase (BVC)	NS	--	--	NS	--	--	ND	U	2.6	ND	U	1.4
	Chloroform Reductase (CFR)	NS	--	--	NS	--	--	679		26.3	ND	U	14.3
	Dehalobacter DCM (DCM)	NS	--	--	NS	--	--	5070		26.3	ND	U	14.3
	Dehalobacter spp. (DHBt)	NS	--	--	NS	--	--	381000		26.3	155000		14.3
	Dehalobium chlorocoercia (DECO)	NS	--	--	NS	--	--	11400		26.3	12800		14.3
	Dehalococcoides (DHC)	NS	--	--	NS	--	--	0.9	J	2.6	1.6		14.3
	Dehalogenimonas spp. (DHG)	NS	--	--	NS	--	--	1150		26.3	1190		14.3
	Desulfitobacterium spp. (DSB)	NS	--	--	NS	--	--	193000		26.3	60600		14.3
	Desulfuromonas spp. (DSM)	NS	--	--	NS	--	--	3010		26.3	433		14.3
	Dichloromethane Dehalogenase (DCMA)	NS	--	--	NS	--	--	ND	U	26.3	ND	U	14.3
	Epoxyalkane Transferase (EtnE)	NS	--	--	NS	--	--	372		26.3	ND	U	14.3
	Ethene Monooxygenase (EtnC)	NS	--	--	NS	--	--	ND	U	26.3	ND	U	14.3
	Methanogens (MGN)	NS	--	--	NS	--	--	201000		26.3	583000		14.3
	PCE Reductase (PCE-1)	NS	--	--	NS	--	--	ND	U	26.3	ND	U	14.3
	Phenol Hydroxylase (PHE)	NS	--	--	NS	--	--	61500		26.3	8080		14.3
	PMMO	NS	--	--	NS	--	--	NS	--	--	NS	--	--
	Soluble Methane Monooxygenase (SMMO)	NS	--	--	NS	--	--	90.1		26.3	213		14.3
	Sulfate Reducing Bacteria (APS)	NS	--	--	NS	--	--	88600		26.3	28200		14.3
	tceA Reductase (TCE)	NS	--	--	NS	--	--	ND	U	2.6	ND	U	1.4
	Toluene Dioxygenase (TOD)	NS	--	--	NS	--	--	ND	U	26.3	ND	U	14.3
	Toluene Monooxygenase (RMO)	NS	--	--	NS	--	--	45600		26.3	20800		14.3
	Toluene Monooxygenase 2 (RDEG)	NS	--	--	NS	--	--	64200		26.3	15800		14.3
	Total Eubacteria (EBAC)	NS	--	--	NS	--	--	23300000		26.3	14500000		14.3
	trans-1,2-DCE Reductase (TDR)	NS	--	--	NS	--	--	ND	U	26.3	ND	U	14.3
	Trichlorobenzene Dioxygenase (TCBO)	NS	--	--	NS	--	--	ND	U	26.3	ND	U	14.3
	Vinyl Chloride Reductase (VCR)	NS	--	--	NS	--	--	ND	U		0.3	J	1.4
EDB (µg/L) EPA Method 8011	1,2-DIBROMOETHANE	1.2		0.0029	0.074		0.00029	0.019	J	0.00029	0.016		0.00029
Fluorometric (µg/L) Spectrofluorophotometry	FLUORESCEIN	NS	--	--	NS	--	--	NS	--	--	NS	--	--
Reduced Gases (µg/L) RSKSOP-175	ACETYLENE	ND	U	10	ND	U	10	ND	U	10	ND		10
	ETHANE	1.5	J	4	1.2	J	4	1.6	J	4	2		4
	ETHYLENE	6		5	3.6	J	5	2.7	J	5	2.4		5
	METHANE	9000.4		2	9674		2	11240.9		2	11940.9		20
	PROPANE	1.8	J	6	ND	U	6	1.8	J	6	2		6
General Chemistry (mg/L) SM2320b, EPA Method 300, EPA Method 353.2, SM4500 PE	ALKALINITY	430		5	460		5	500		5	520		5
	BROMIDE	0.81		0.5	1.5		0.5	1.1		0.5	0.67		0.5
	CHLORIDE	50		0.5	47		0.5	46		0.5	46		0.5
	IODIDE	3.9		0.75	3.6		0.75	4.3		0.75	3.9		1.5
	NITRATE	NS	--	--	NS	--	--	NS	--	--	NS	--	--
	NITRITE	NS	--	--	NS	--	--	NS	--	--	NS	--	--
	NITROGEN, NITRATE-NITRITE	ND	U	0.1	ND	U	0.05	ND	U	0.05	ND		0.05
	O-PHOSPHATE (AS P)	1.5		0.15	0.18	J	0.15	ND	UJ	0.15	ND		0.15
	SULFATE	ND	U	1	2.2		1	ND	U	1	ND		1
VFAs (mg/L) EPA Method 300m	ACETIC ACID	9.8	J	10	ND	U	1	ND	U	1	0.7		1
	BUTYRIC ACID	ND	U	1	ND	U	1	ND	U	1	ND		1
	FORMIC ACID	2.4	J	10	ND	U	1	0.5	J	1	ND		1
	LACTIC ACID	0.4	J	1	0.9	J	1	0.8	J	1	1		1
	PROPIONIC ACID	47.6		10	ND	U	1	ND	U	1	ND		1
	PYRUVIC ACID	ND	U	1	ND	U	1	ND	U	1	ND		1
	VALERIC ACID	ND	U	1	ND	U	1	ND	U	1	ND		1

Table 15
Groundwater Analytical Results for KAFB-106MW2-S

	Phase Designation	Phase 3 Passive									Phase 4 Passive		
	Sample ID	106MW2S-P3P-091118			106MW2S-P3P-100218			106MW2S-P3P-111518			106MW2S-P4P-0111719		
	Sample Date	9/11/2018			10/2/2018			11/15/2018			1/17/2019		
	Sample Pupose	REG			REG			REG			REG		
Chemical Class and Analytical Method[a]	Parameter	Result	Val Qual	LOQ	Result	Val Qual	LOQ	Result	Val Qual	LOQ	Result	Val Qual	LOQ
Dissolved Metals (mg/L) EPA Method 6010	IRON	7.6		0.05	9.2		0.05	10		0.05	13		0.05
	MANGANESE	10		0.003	11		0.003	11		0.003	11		0.003
δ2H (‰) Mass Spectrometry, USGS Reston, VA	DELTA2H	NS	--	--	NS	--	--	NS	--	--	NS	--	--
CSIA EDB δ13C ‰) Kuder et al, 2012	EDB δ	-4.6 ±8‰	--	--	NS	--	--	NS	--	--	NS	--	--
VOCs (µg/L) EPA Method 8260	1,1,2-TRICHLOROETHANE	ND	U	50	ND	U	50	ND	U	50	ND		25
	1,2,4-TRIMETHYLBENZENE	220		100	200		100	190		100	240		50
	1,2-DIBROMOETHANE	ND	U	100	ND	U	100	ND	U	100	ND		50
	1,2-DICHLOROETHANE	ND	U	100	ND	U	100	ND	U	100	NA	--	--
	1,3,5-TRIMETHYLBENZENE	76	J	50	78	J	50	75	J	50	92		25
	2-BUTANONE	ND	U	1000	ND	U	1000	ND	U	1000	ND		500
	2-CHLOROTOLUENE	ND	U	50	ND	U	50	ND	U	50	ND		25
	2-HEXANONE	ND	U	500	ND	U	500	ND	U	500	ND		250
	4-METHYL-2-PENTANONE	ND	U	500	ND	U	500	ND	U	500	ND		250
	ACETONE	ND	U	1000	ND	U	1000	ND	U	1000	ND		500
	BENZENE	2300		100	1900		100	2100		100	2400		50
	CARBON DISULFIDE	ND	U	200	ND	U	200	ND	U	200	ND		100
	CHLOROMETHANE	ND	U	100	ND	U	100	ND	U	100	ND		50
	DICHLORODIFLUOROMETHANE	ND	U	100	ND	U	100	ND	U	100	NA	--	--
	ETHYLBENZENE	640		100	540		100	620		100	NA	--	--
	ISOPROPYLBENZENE	78	J	100	98	J	100	130		100	190		50
	METHYL TERT-BUTYL ETHER	ND	U	50	ND	U	50	ND	U	50	ND		25
	METHYLENE CHLORIDE	ND	U	500	ND	U	500	ND	U	500	ND		250
	NAPHTHALENE	ND	U	500	ND	U	500	ND	U	500	ND		250
	N-BUTYLBENZENE	ND	U	100	ND	U	100	ND	U	100	ND		50
	N-PROPYLBENZENE	57	J	100	55	J	100	56	J	100	65		50
	P-ISOPROPYLTOLUENE	76	J	100	84	J	100	63	J	100	80		50
	SEC-BUTYLBENZENE	ND	U	100	ND	U	100	ND	U	100	ND		50
	TERT-BUTYLBENZENE	ND	U	100	ND	U	100	ND	U	100	ND		50
	TOLUENE	5800		100	5000		100	4900		100	150		50
	TRICHLOROETHENE	ND	U	100	ND	U	100	53	J	100	ND		50
	TRICHLOROFLUOROMETHANE	ND	U	100	ND	U	100	ND	U	100	ND		50
	XYLENES	2000		50	1800		50	2000		50	2600		25

Notes:

a. EPA analytical methods listed are for the most recent sampling event.

b. Samples were collected using Geotech Bladder Pumps.

c. Samples were recollected (except for QuantArray-Chlor analysis) using replacement QED Bladder Pumps.

-- = Not applicable.

δ2H - Delta Deuterium.

0/00 - Per mille.

cells/mL = Cells per milliliter.

EPA = Environmental Protection Agency.

FD = Field duplicate.

ID = Identification.

J = Estimated value, concentration is less than LOQ but greater than laboratory method detection limit (DL).

J+ = Estimated value, concentration is less than LOQ but greater than laboratory method detection limit (DL); biased high.

J- = Estimated value, concentration is less than LOQ but greater than laboratory method detection limit (DL); biased low.

KAFB = Kirtland Air Force Base.

LOQ = Limit of Quantitation

µg/L = Microgram per liter.

mg/L = Milligram per liter.

NA = Not analyzed.

ND = Not detected.

NS = Not sampled.

REG = Regular/parent sample.

U = Analyte was not detected. The reported numerical value is at or below the LOQ.

UJ = Analyte was not detected. The reported value is estimated.

VAL QUAL = Validation qualifier.

VFA - Volatile fatty acid.

VOC = Volatile organic compound.

Table 16
Measures of Tracer Distribution during Phase 1

Well ID	Distance from Injection Well at Surface (Feet)	Greatest Fluorescein Concentration (µg/L)	Greatest δ^2H Value (‰)	Date of Greatest Tracer Contribution (fluorescein and δ^2H)	Transport Time (as indicated by date of greatest tracer contribution [days])
KAFB-106IN1	--	570[a]	+590[a]	10/2/2017	--
KAFB-106MW2-S	28	207.7	+128	10/6/2017	3.5
KAFB-106064	31	144.5	+124	10/6/2017	3.5
KAFB-106MW1-S	47	64.9	-31	10/12/2017	9.5
KAFB-106EX2	76	10.1	-83	10/26/2017 (fluorescein) 11/1/2017 (δ^2H)[b]	22.5-29.5[b]
KAFB-106EX1	92	3.7	-90	11/1/2017[b]	29.5[b]

Notes:

[a] Average injected concentration over 24-hour period.

[b] Greatest quantities occurred at the last sampling of recirculation period and it is unknown if greater quantities might have been observed later had recirculation continued

‰ - Per mille.

δ^2H - delta deuterium (measure of hydrogen isotope composition).

ID - Identification.

KAFB - Kirtland Air Force Base.

µg/L - Micrograms per liter.

Table 17
Contaminant Reduction During Test Phases

Well ID	n - Log_{10} Concentration Reduction During Passive Phase Relative to Recirculation											
	Phase 1			Phase 2			Phase 3			Phase 4[a]		
	Benzene	Toluene	EDB	Benzene	Toluene	EDB	Benzene	Toluene	EDB	Benzene	Toluene	EDB
KAFB-106064	-0.1	-0.4	0.6	0.0	-0.1	1.1	0.1	0.0	2.5	0.2	0.9	3.7
KAFB-106MW1-S	0.0	-0.1	0.3	-0.1	-0.1	0.9	-0.4	-0.3	0.3	0.0	-0.2	2.6
KAFB-106MW2-S	0.0	0.1	0.7	0.2	0.2	3.6	0.2	0.2	2.7	-0.6	1.0	3.7
KAFB-106EX1	0.1	0.1	0.6	0.0	0.0	1.5	0.1	0.0	1.4	0.0	0.1	1.6
KAFB-106EX2	0.0	0.0	0.1	0.0	0.1	0.0	0.1	0.1	0.3	0.2	0.1	0.4
KAFB-106IN1	0.0	0.0	0.6	0.1	0.2	3.6	0.7	0.5	3.0	0.4	0.3	2.8
KAFB-106063	-[b]	-[b]	-[b]	0.0	-0.8	0.2	-0.2	-0.4	0.5	0.1	0.1	0.9
KAFB-106MW1-I	2.8	2.4	1.3	1.1	1.7	1.0	0.0	0.6	0.6	0.2	1.0	2.4
KAFB-106MW2-I	0.7	1.7	0.6	1.8	2.5	1.1	0.7	0.9	0.5	1.4	2.7	2.2
Percent Reduction												
KAFB-106064	-17.20%	-158.62%	73.29%	6.14%	-14.60%	92.13%	20.00%	8.33%	99.69%	30.23%	86.90%	99.98%
KAFB-106MW1-S	-4.68%	-18.97%	54.04%	-18.70%	-20.75%	88.27%	-164.86%	-81.82%	52.73%	-6.80%	-69.74%	99.75%
KAFB-106MW2-S	-5.13%	11.18%	77.94%	30.89%	32.51%	99.98%	41.67%	38.75%	99.78%	-309.56%	90.26%	99.98%
KAFB-106EX1	25.58%	17.15%	75.19%	-10.38%	-5.76%	96.58%	21.05%	10.20%	95.61%	4.31%	28.57%	97.51%
KAFB-106EX2	-8.61%	-0.73%	13.87%	-2.35%	15.74%	-11.11%	25.00%	27.84%	47.42%	29.66%	27.27%	56.64%
KAFB-106IN1	3.65%	9.37%	74.81%	21.69%	32.19%	99.98%	78.50%	66.21%	99.89%	61.14%	48.72%	99.84%
KAFB-106063	-[b]	-[b]	-[b]	6.96%	-501.90%	38.01%	-70.49%	-181.48%	71.20%	19.35%	15.79%	86.56%
KAFB-106MW1-I	99.83%	99.60%	95.19%	91.85%	97.82%	90.93%	8.33%	73.75%	72.50%	38.89%	90.75%	99.56%
KAFB-106MW2-I	82.10%	98.11%	74.02%	98.39%	99.68%	92.81%	80.00%	86.67%	66.88%	96.02%	99.81%	99.43%

Notes:

[a] Reduction Relative to Baseline Before Pilot Test for shallow wells, and to maximum concentration for intermediate wells

[b] No previous quantity for comparison.

% - Percent.

ID - Identification.

KAFB - Kirtland Air Force Base.

APPENDICES
(APPENDICES ARE PROVIDED ON CD)

Description: High Mesa potholing for utilities at KAFB-106IN1.

Description: Cascade drilling with ARCH rig; lifting drive casing and drill string.

Description: Geologist collecting soil cuttings from hopper during drilling operations for lithologic classification.

Description: EZ Trac ready for downhole deviation testing.

Description: Cascade installing PVC casing during well installation activities.

Description: ACT removing roll-off containing soil cuttings.

Description: Cascade well development rig setup.

Description: Well development setup at KAFB-106IN1, with jetting tool.

Description: Installing KAFB-106EX1 well vault and trenching for utilities/pipeline.

Description: Installing Grunfos pump at KAFB-106EX2.

Description: Recirculation system conex box prior to connection to electrical and conveyance piping.

Description: Trenching to place conveyance piping.

Description: Interior of conex box recirculation system (wet side); showing extraction and injection well piping, amendment tank, flow meters (yellow), pressure transmitters, emergency stop button, and blue filter canisters.

Description: Interior of recirculation system control room.

Description: Working on the main electrical disconnect and meter wiring.

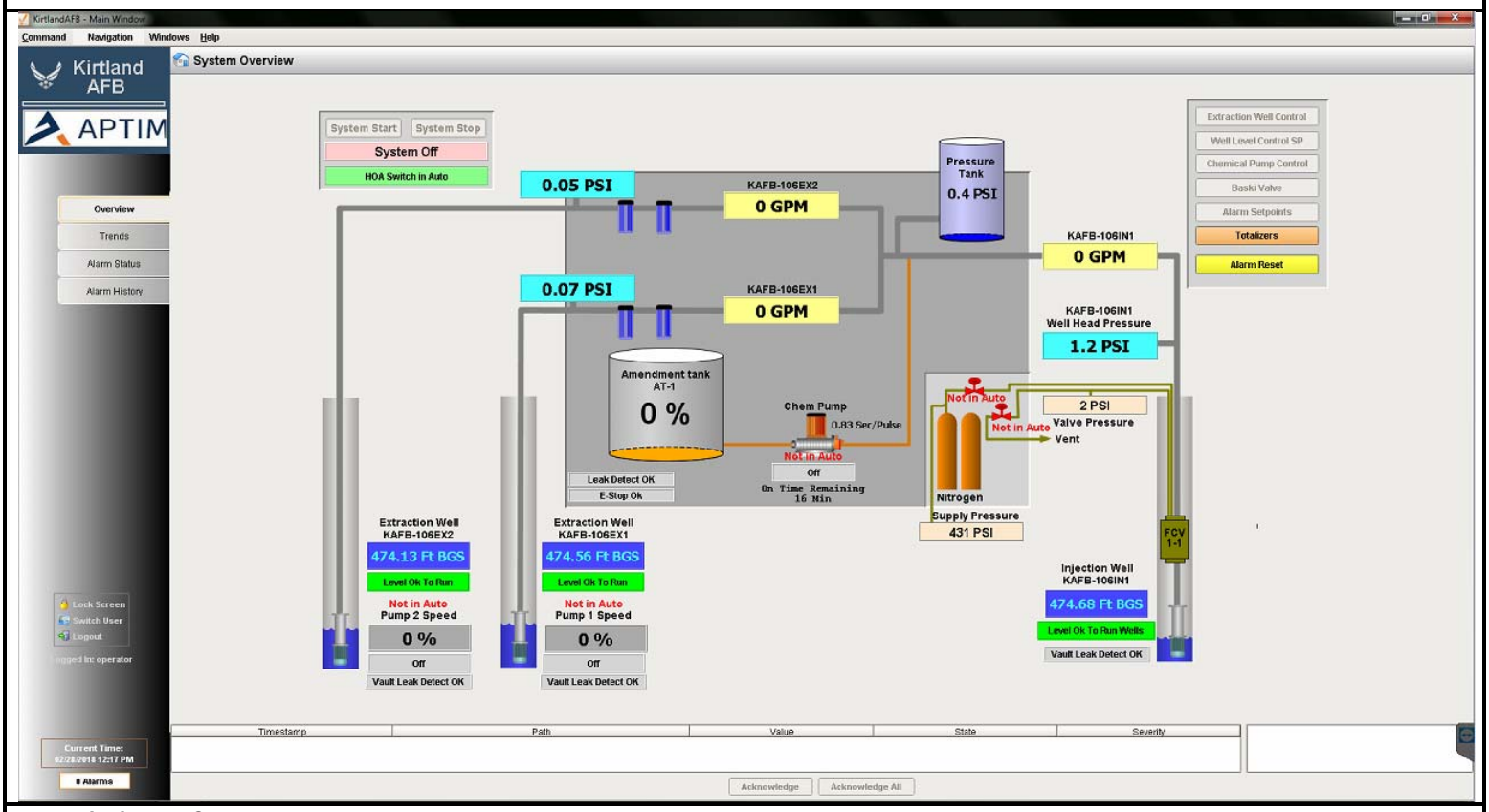

Description: SCADA system main control screen, allowing both local and remote access and control of the recirculation system.

Description: Fluorescein being introduced to the recirculated groundwater through the injection port, and flowing through the static mixer during the Phase 1 tracer test.

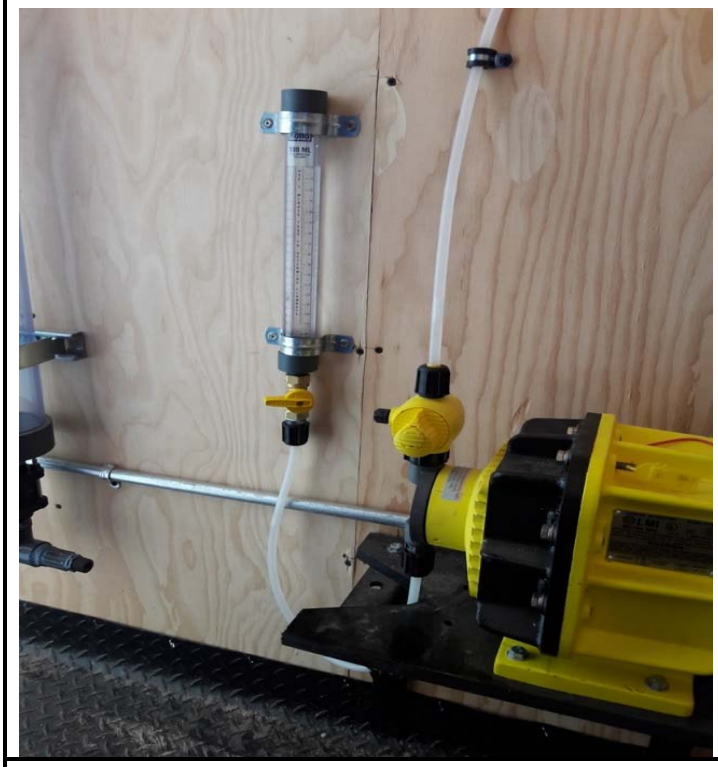

Description: Chemical feed pump (right) and calibration column.

Description: Weighing amendments for Phase 2 recirculation.

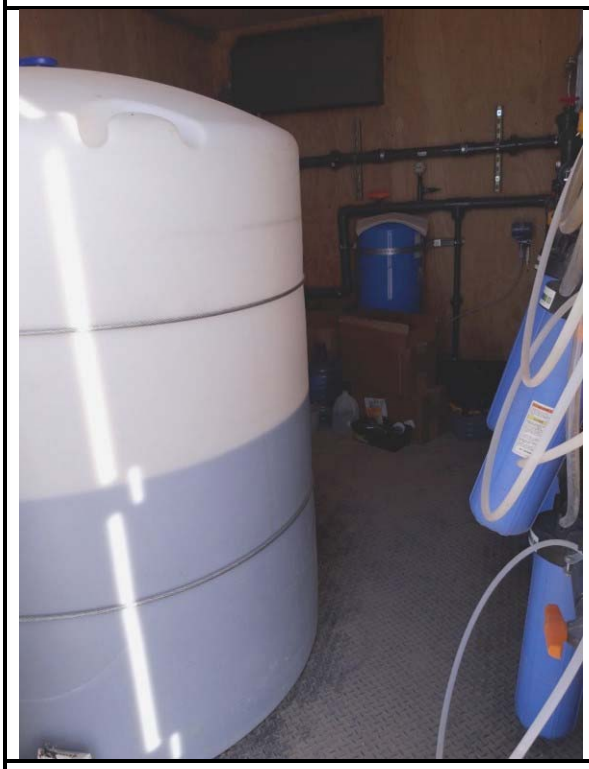

Description: Treatment amendments homogenized in tank and ready for injection.

Description: Completed injection well vault and wellhead manifold.

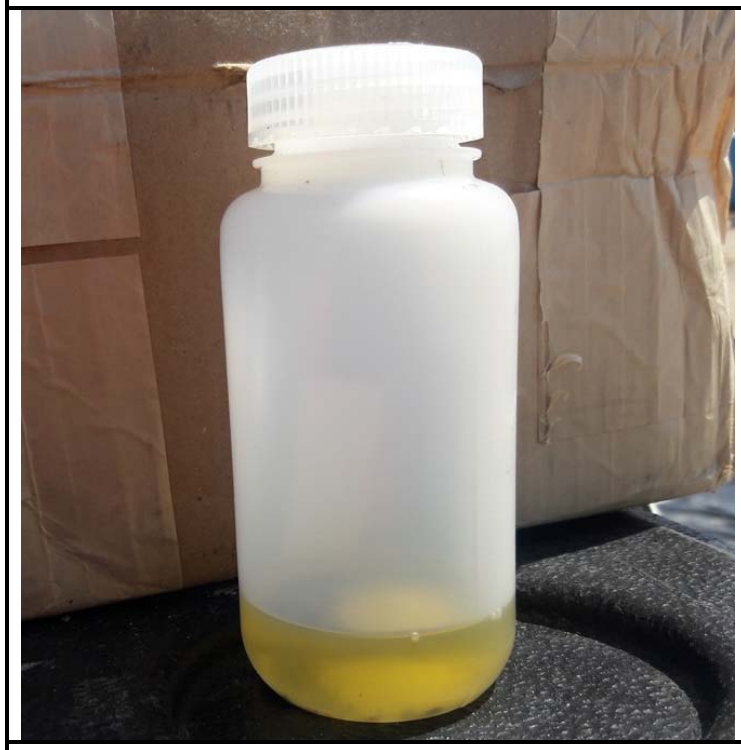

Description: LNAPL bailed from KAFB-106MW1-S.

Description: Groundwater sampling at KAFB-106MW2.

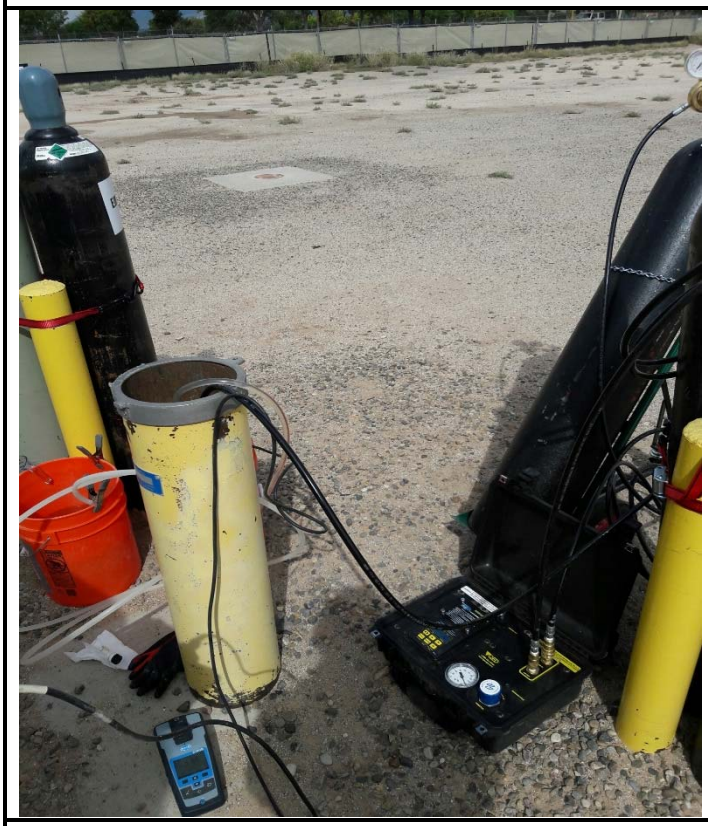

Description: Groundwater sampling setup with high pressure controller for bladder pump.

BASE CIVIL ENGINEER DIGGING PERMIT REQUEST

DATE: 7/20/16 | Dig Permit #: 1607-014

LOCATION: Kirtland AFB NOV Response Contract

CONTRACT NO., WORK ORDER NO., ECT: W9128F12-D0003

IMMEDIATE EMERGENCY _____ NORMAL X

PLANNED DIG DATE August 15, 2016

Detailed description of work (holes, trenching, etc):
- Install 5 wells to approx. 510 feet bgs.
- Trench to 3 feet bgs to install utilities. (250 feet)

PRINTED NAME OF RESPONSIBLE REQUESTOR: CAITLIN LACHANCE

CONTACT INFORMATION: Primary: 505.328.4710 Alternate: 505.262.8942

Organization/Company Name: CB:I Federal Services

I understand that that authorization to dig is conditional upon completing the entire form and compliance with the guidelines briefed as well as compliance with applicable OSHA, AFI and AFOSH requirements. I understand the exact location of a buried line may be located approximately four (4) feet on either side of the marked location.

	COORDINATING ORGANIZATION		COORDINATORS ACTIONS & REMARKS	COORDINATORS NAME & PHONE
UTILITIES	ELECTRICAL DISTRIBUTION 846-8145	☐ Marked ☑ Clear	Remarks:	
	DOMESTIC AND RAW WATER 846-7863 / 846-1552	☐ Marked ☑ Clear	Remarks: Pothole	
	SEWER MAINS 846-7863 / 846-1552	☑ Marked ☐ Clear	Remarks:	
	GAS MAINS 846-7863 / 846-1552	☐ Marked ☑ Clear	Remarks:	
OPERATIONS	PAVEMENTS & STORM DRAINS 846-5650 / 846-2994	☐ Marked ☑ Clear	Remarks:	
	IRRIGATION 846-1803	☐ Marked ☑ Clear	Remarks:	
	ELECTRICAL 853-6493	☐ Marked ☑ Clear	Remarks:	
	CATHODIC PROTECTIONS CECX 846-4633	☐ Marked ☑ Clear	Remarks:	
	TRAFFIC & ALARMS 853-6495	☐ Marked ☑ Clear	Remarks:	
	FUEL/POL LINES 934-2733	☑ Marked ☐ Clear	Remarks:	
	LP GAS, WATER AND SEWER SERVICE LINES/LATERALS 846-5293 / 934-9664	☑ Marked ☐ Clear	Remarks:	
	FIRE PROTECTION SYSTEMS 846-5293 / 934-9664	☑ Marked ☐ Clear	Remarks: Pothole	
CEC	ENVIRONMENTAL Bldg 20685 846-3774	☐ Marked ☑ Clear	Remarks: See notes - Env	
OTHER BASE AGENCIES	BIO-ENVIRONMENTAL Bldg 589 846-2670	☐ Marked ☑ Clear	Remarks: See notes - Bio	
	EOD Bldg 20413 846-2229	☐ Marked ☑ Clear	Remarks:	
	COMMUNICATIONS Bldg 20420 846-8411	☐ Marked ☑ Clear	Remarks:	
	SECURITY POLICE Resource Protection Bldg 20220 846-6209	☐ Marked ☑ Clear	Remarks:	
	FIRE DEPARTMENT 846-8305	☐ Marked ☑ Clear	Remarks:	
	WEAPONS SAFETY 841-4229	☐ Marked ☑ Clear	Remarks:	
	GROUND SAFETY 853-0268	☐ Marked ☑ Clear	Remarks: See notes - SEG	
	OTHER AS REQUIRED	☐ Marked ☐ Clear	Remarks:	
	HUNT COMPANIES (PRIVATIZED HOUSING)	☐ INITIALS ☐ DATE	Applicant acknowledges that they must contact Hunt corporations for locating Hunt utilities prior to excavation.	
	COMMERCIAL UTILITIES New Mex ONE CALL 260-1990 48 Hours before digging			

CLEARANCE IS : ☐APPROVED (For 30 Days from Approval date) ☐DISSAPPROVED (Reason)

APPROVING CIVIL ENGINEERING SIGNATURE: [signature] | APPROVAL DATE: 8/15/16 | EXPIRATION DATE: 9/15/16

A COPY OF THIS APPROVED FORM MUST BE AT THE DIGGING SIGHT UNTIL COMPLETE

Summary of Work, KAFB Bulk Fuels Facility RAPID NOV Response

Work is to be performed on Kirtland AFB to install two groundwater monitoring wells (KAFB-106MW1 and KAFB-106MW2), one injection well (KAFB-106IN1), and two extraction wells (KAFB-106EX1 and KAFB-106EX2); and installation of underground utilities. Intrusive activities will be performed in an undeveloped area located just south of Randolph Avenue (Figure 1).

Intrusive activities:

Drilling

All five wells will be installed to approximate depths of 510 feet below ground surface. Prior to drilling, the boreholes will be hand augered (pothole) to a depth of 5 feet at the drilling location to test for underground utilities.

Trenching

Approximately 250 linear feet will be trenched down to a depth of 3 feet below ground surface to house utilities that will service a recirculation system and the three extraction/injection wells mentioned above.

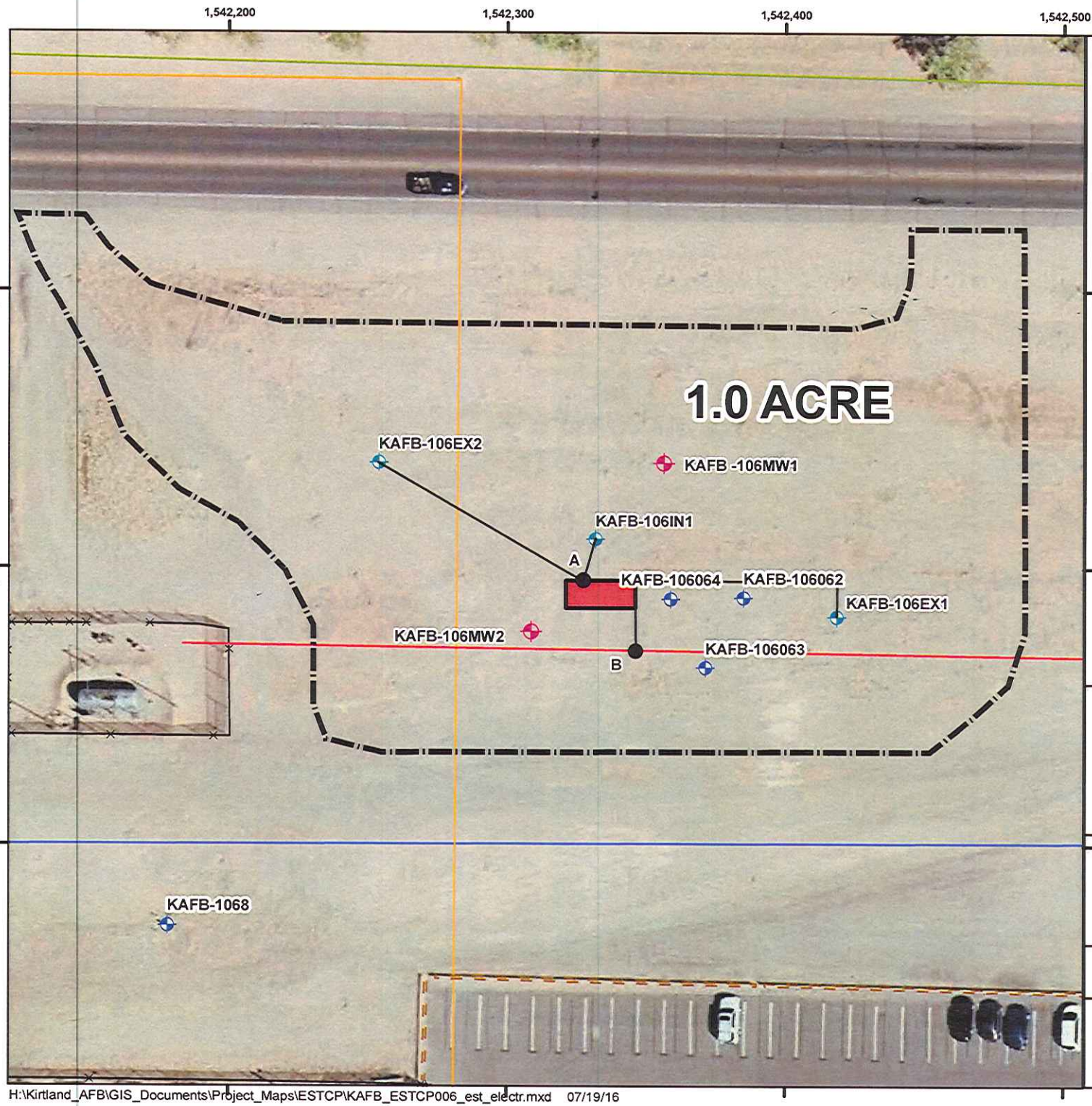

Legend

- Monitoring Well
- Pilot Test Monitoring Well
- Pilot Test Injection/Extraction Well
- Wall Line
- Fence Line
- Natural Gas Line
- Wastewater Line
- Water Line
- Eelctrical Cable Line

Points A & B are marked w/ stakes.
— Trench location for utilities. (marked with flags)

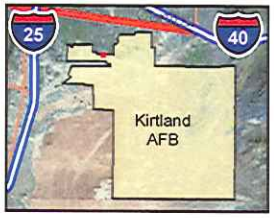

SITE LOCATION

Revision Date: 07/19/16

N

0 12.5 25 50

Feet

1 inch = 50 feet

Projection : NAD83 State Plane New Mexico Central FIPS3002 Feet

FIGURE _

WELL LOCATION MAP

H:\Kirtland_AFB\GIS_Documents\Project_Maps\ESTCP\KAFB_ESTCP006_est_electr.mxd 07/19/16

COMMUNICATIONS

- Comm Pathways
- Comm Manhole
- Permit Area

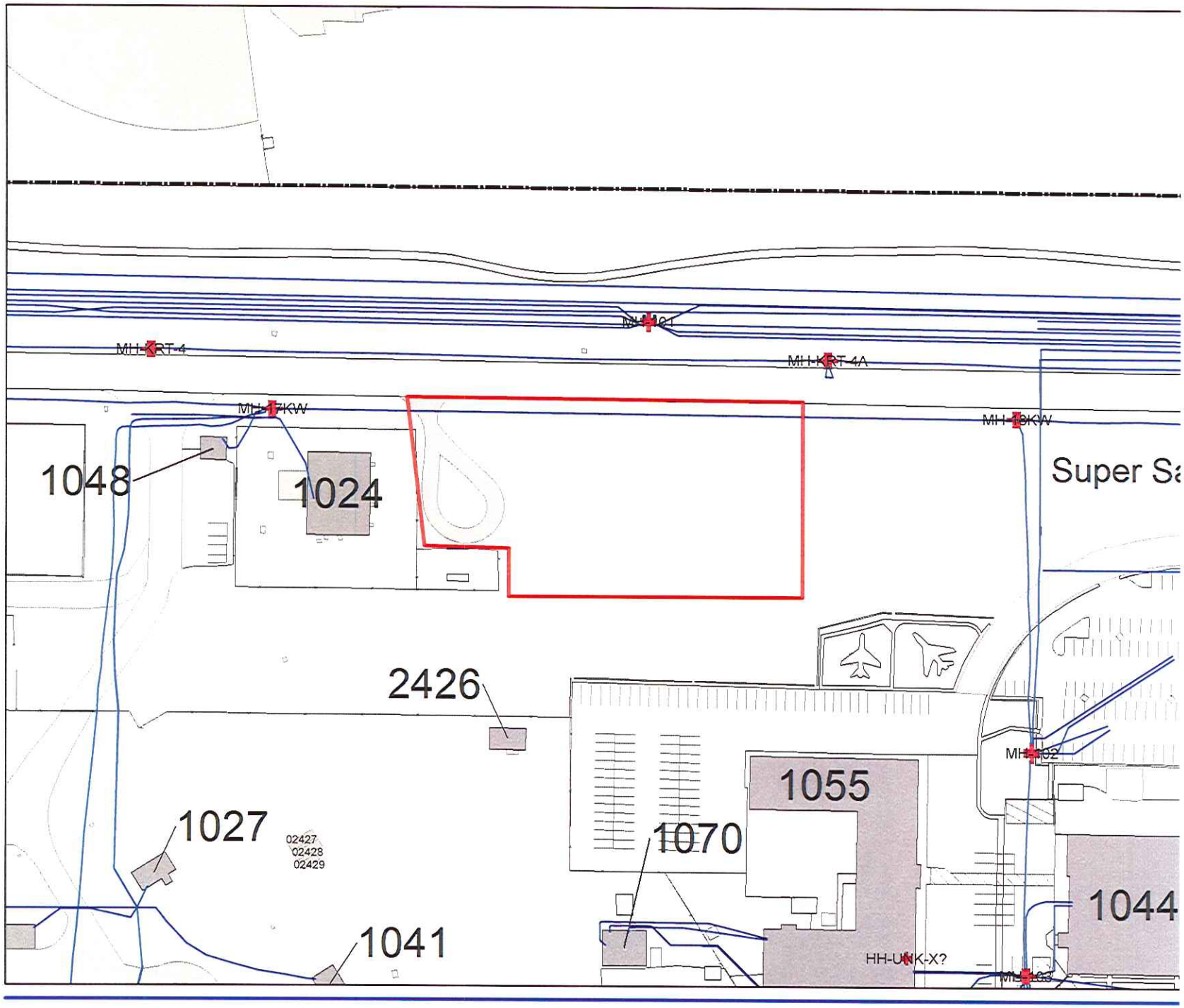

N
W E

Dig Permit # : 1607-014

ELECTRICAL

- Approach
- Flood Light
- Heli-Pad
- Obstruction
- Pole Mounted Light
- Runway Centerline
- Runway Edge
- Runway End
- Runway In Pavement
- Security Light
- Street Light
- Taxiway Centerline
- Taxiway Edge
- Taxiway In Pavement
- Walkway Light
- Tower Pole
- Double Pole
- Riser Pole
- Pole
- Pole Survey Info
- Circuit Breaker
- Circuit Breaker
- Electrical Pedestal
- Emergency Generator
- Handhole
- Manhole
- Pad Mount Switch
- Pad Mount Trans
- Pole Mount Switch
- Pole Mount Trans
- Pull Box
- Sectionalizer
- OH Conductor, Abandoned
- OH Conductor, Transmission
- OH Conductor, Primary
- OH Conductor, Secondary
- OH Conductor, Service
- UG Conductor, Abandoned
- UG Conductor, Primary
- UG Conductor, Secondary
- UG Conductor, Service
- Utility Pole Guy Line
- KAFB Substation
- KFH LLC Substation
- SNL Substation
- DOE Substation
- Permit Area

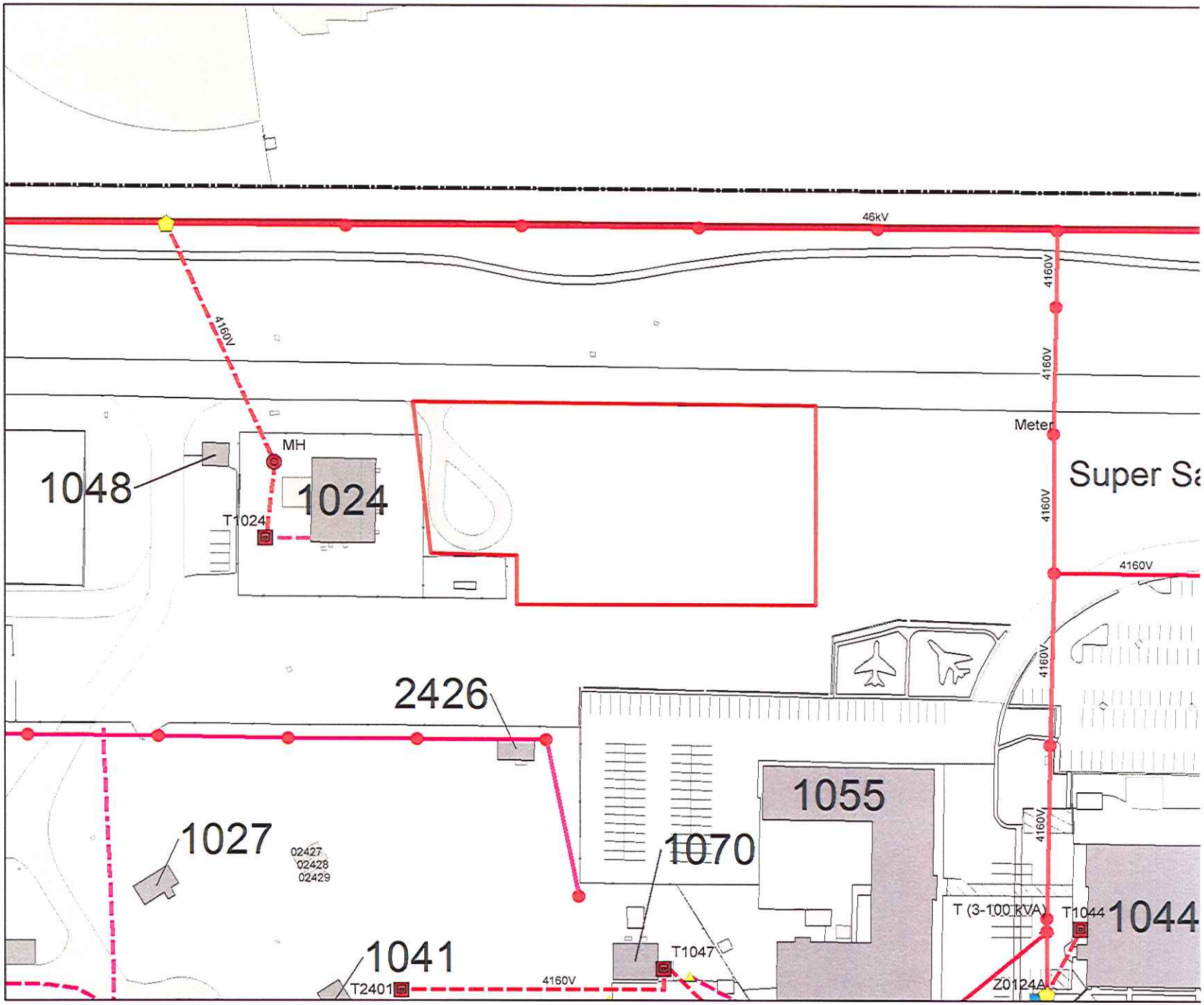

N
W E

Dig Permit # : 1607-014

FUELS

- Fuel Junction
- Fuel Pump Booster
- Fuel Pump Point
- Fuel Tank Point
- Fuel Tank Area
- JP8 Abandoned
- JP4 Abandoned
- JP8
- Auotmotive Diesel
- Bio Diesel
- Mogas
- E85
- Comp Natural Gas
- Propane
- Burner Fuel
- Permit Area

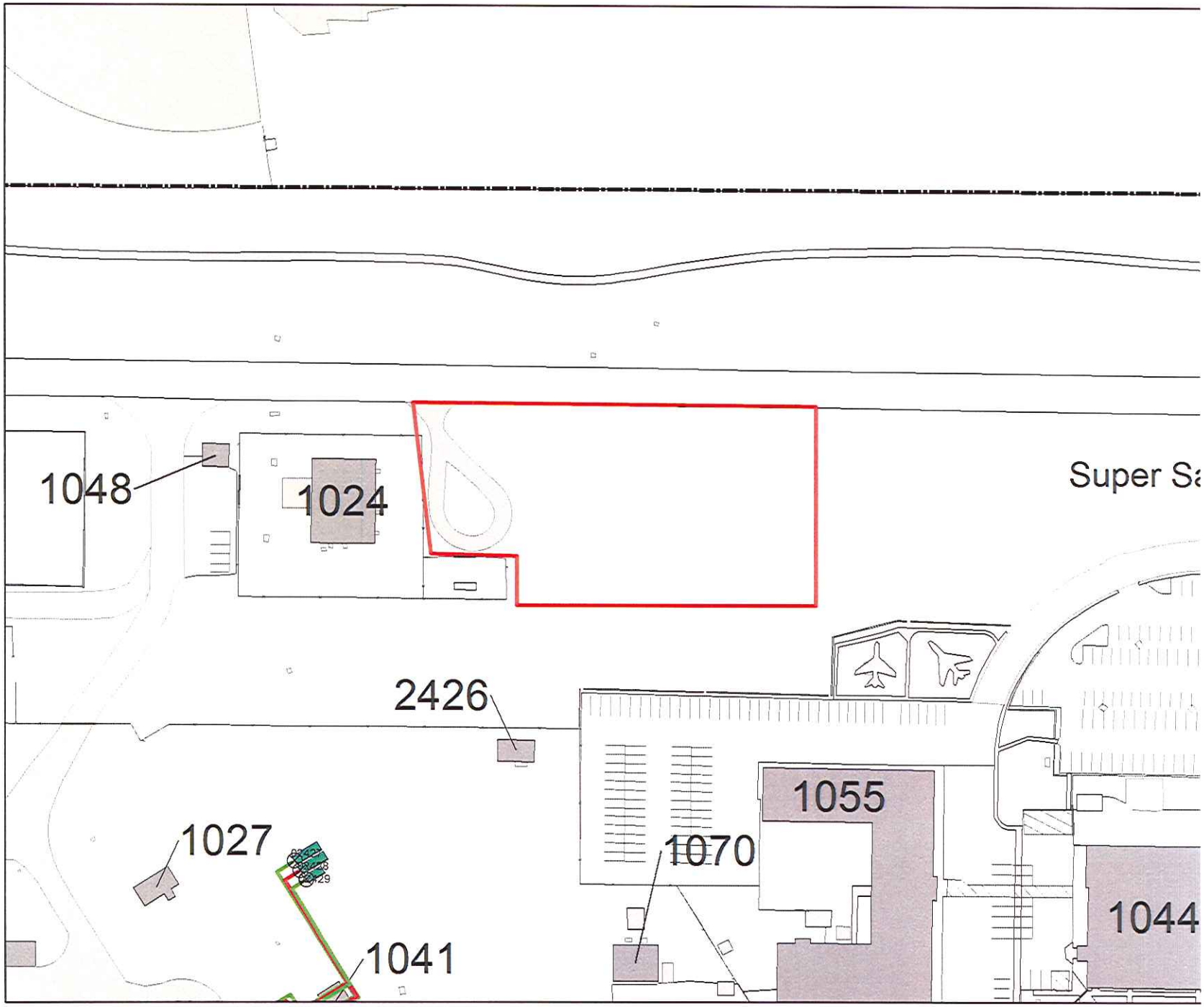

N
W E

Dig Permit # : 1607-014

GAS
- Gas valves
- Abandoned
- Main
- Service
- Permit Area

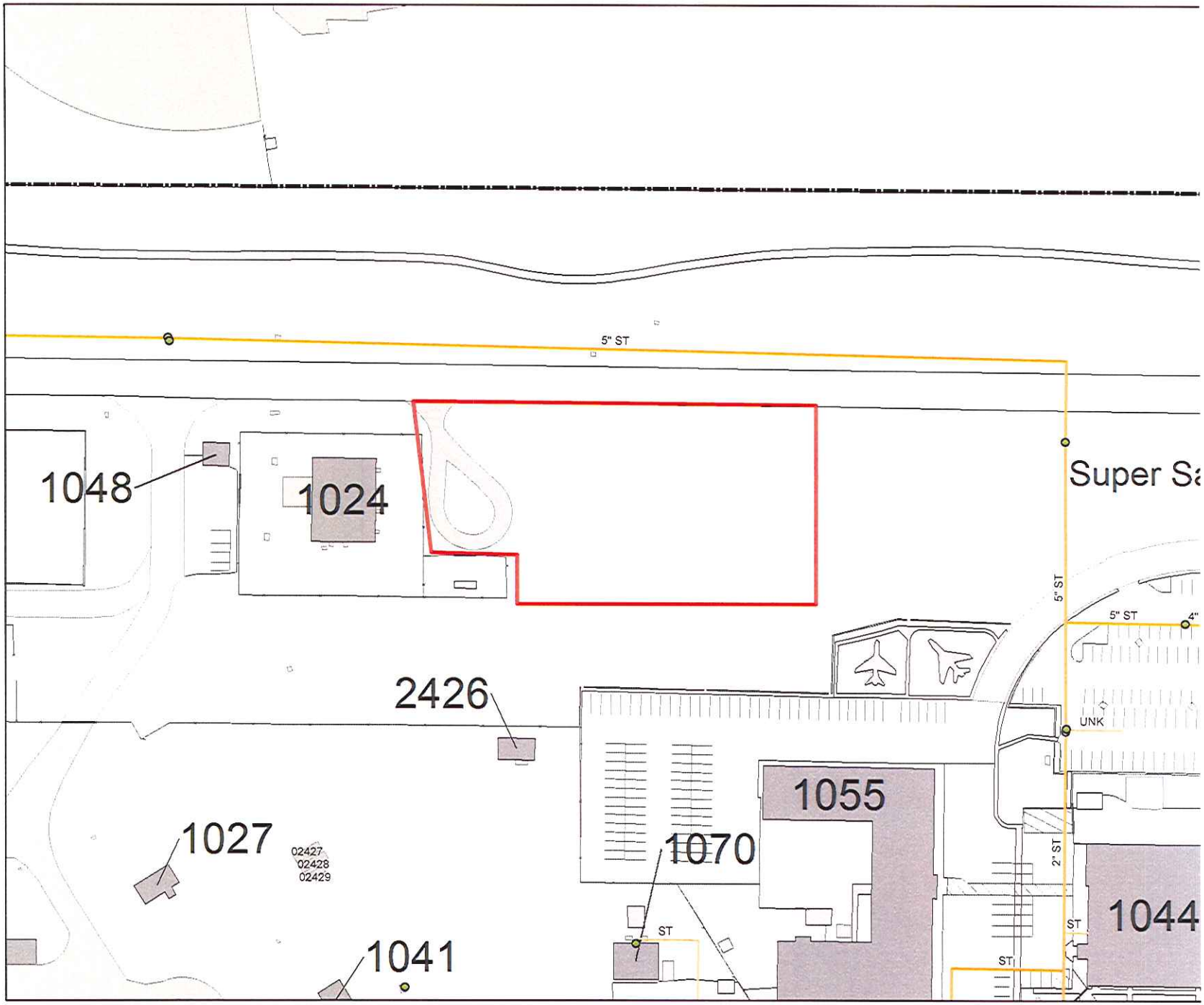

N
W E

Dig Permit # : 1607-014

SANITARY
- CAP
- Catch Basin
- Clean Out
- Distrib. Box
- Grease Trap
- IW JBOX
- IW Manhole
- Inlet
- Junction Box
- Lift Station
- Meter Sta.
- Oil Water Sep
- SAS Ejector
- SAS Manhole
- SAS Valve
- Sand Trap
- Septic Tank
- Abandoned
- Force Main
- Industrial Waste
- Main
- Septic
- Service
- Disposal Tank
- Drain Field
- Lagoon
- Permit Area

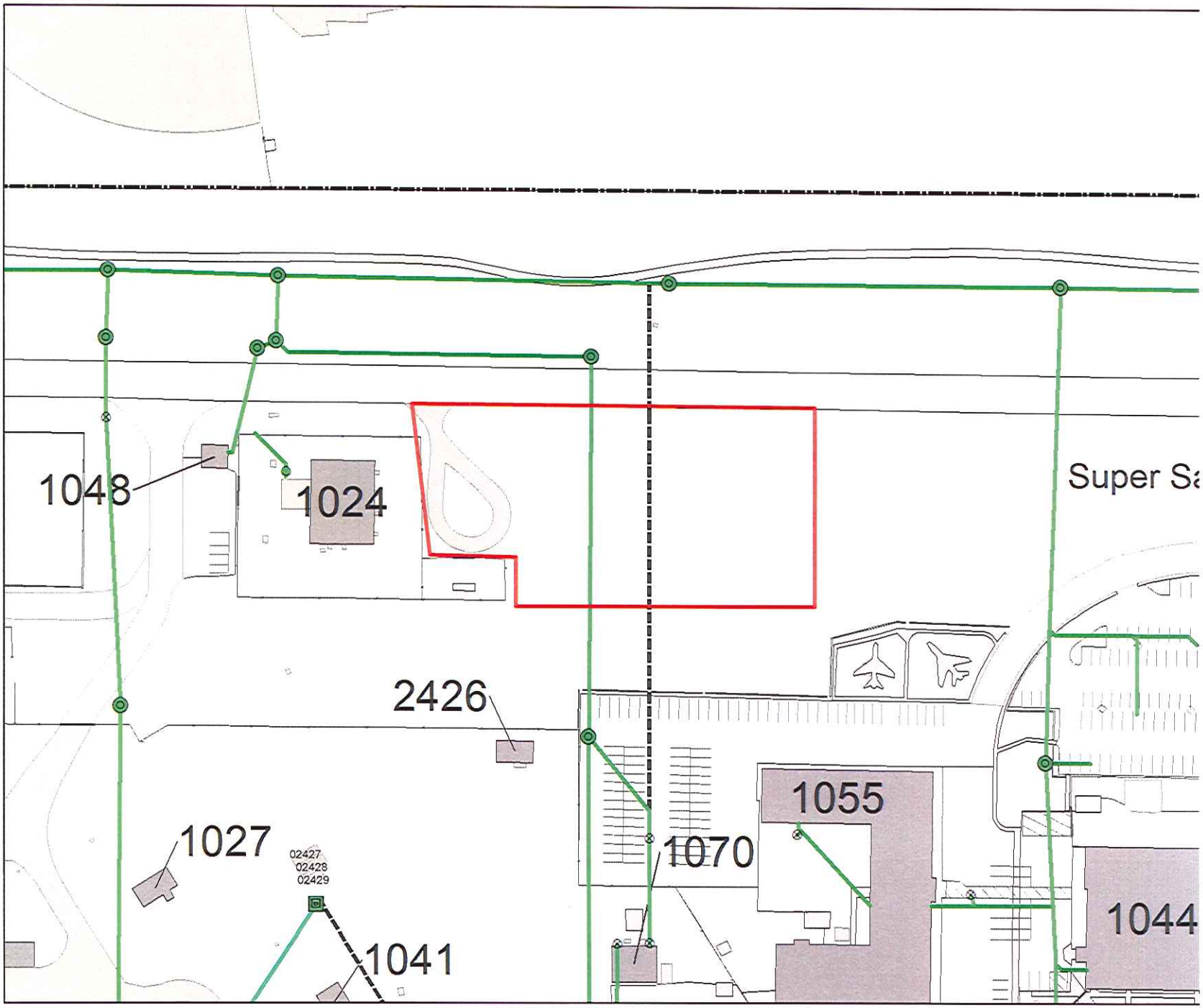

N
W E

Dig Permit # : 1607-014

STEAM

Steam Pit

STMH

EXP LOOP

Abandoned Steam Line

Thermal mainline

Thermal service line

Permit Area

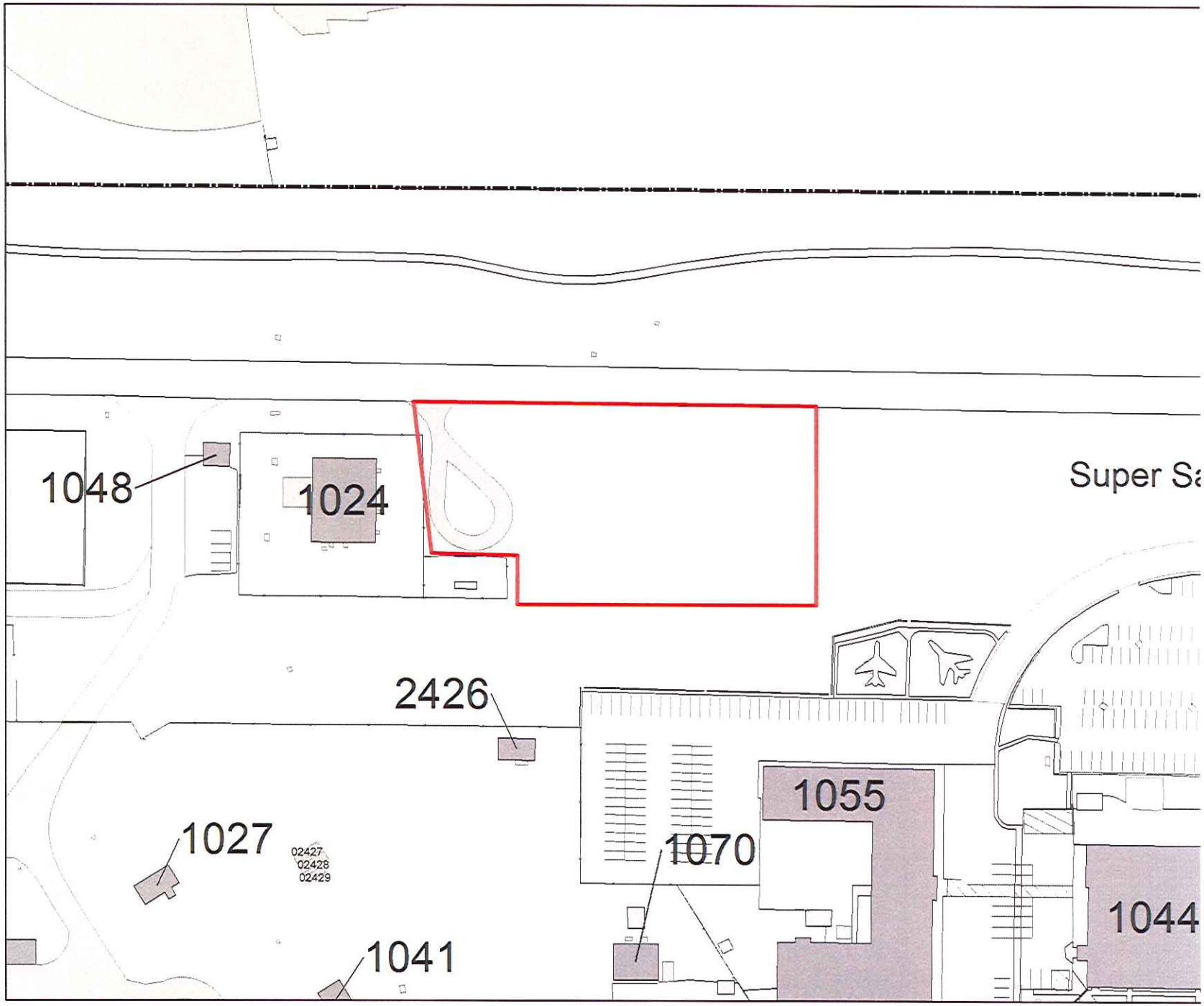

N

W E

Dig Permit # : 1607-014

Storm
Storm
Storm Drainage Line
Open Drainage
Paved Ditch
Unpaved Ditch
Permit Area

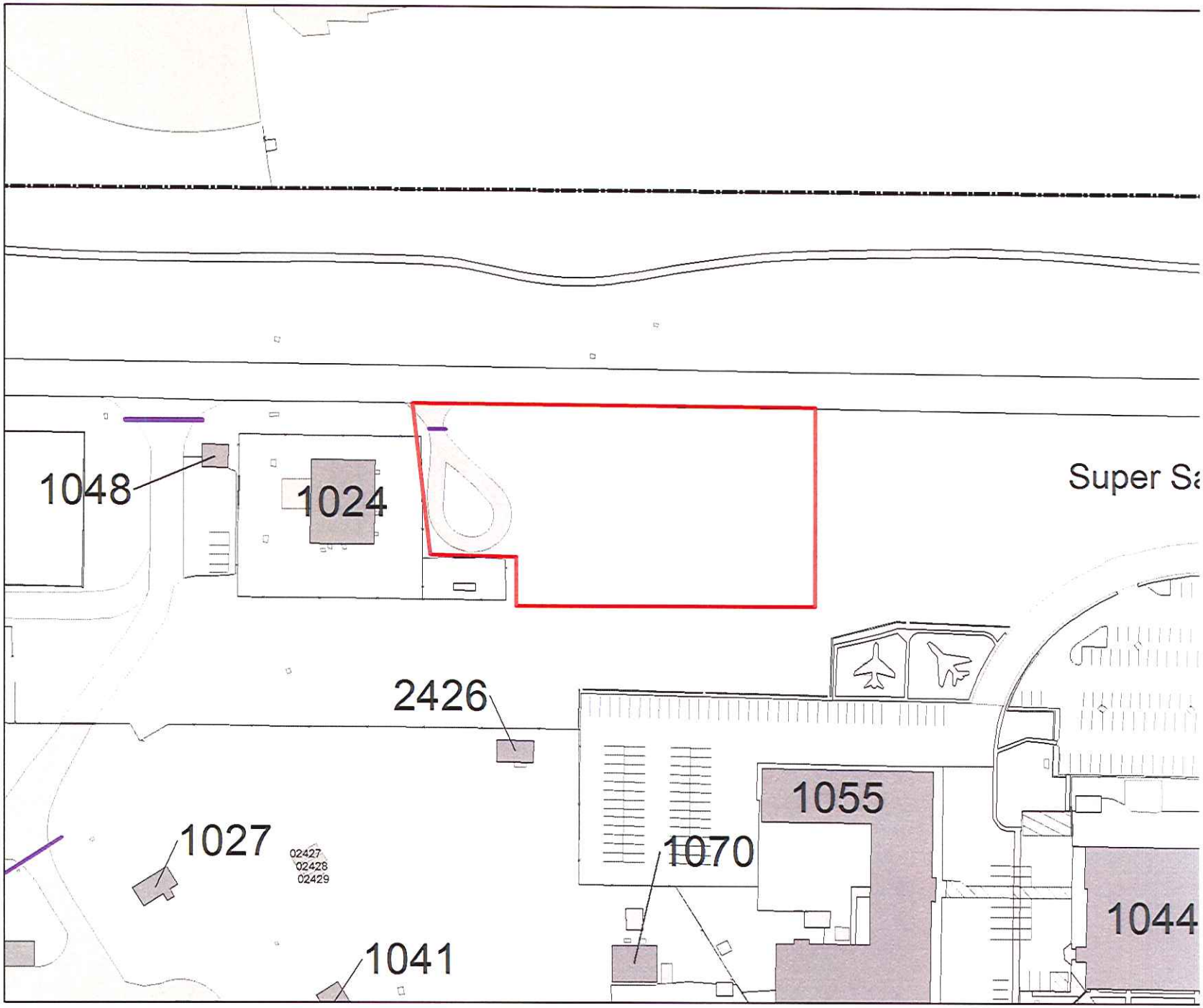

N
W
E

Dig Permit # : 1607-014

WATER

- ARV/S Valve
- Anode Test Sta.
- Back Flow Valve
- Blow Off Valve
- Cap Fitting
- Check Valve
- F.D.C.
- FH Valve
- Faucet Hydrant
- Fire Hydrant
- IRR Valve
- Main Valve
- PIV
- PRV
- Pump Station
- RV Hookup
- Revetter
- Reducer
- Service Valve
- UNK Valve
- Water Junction
- Water Meter
- Water Tank

- Abandoned
- Force Main
- Main
- Collector
- Non-Potable
- Service
- Fire Suppression
- Drainage System
- Irrigation
- Wells

Permit Area

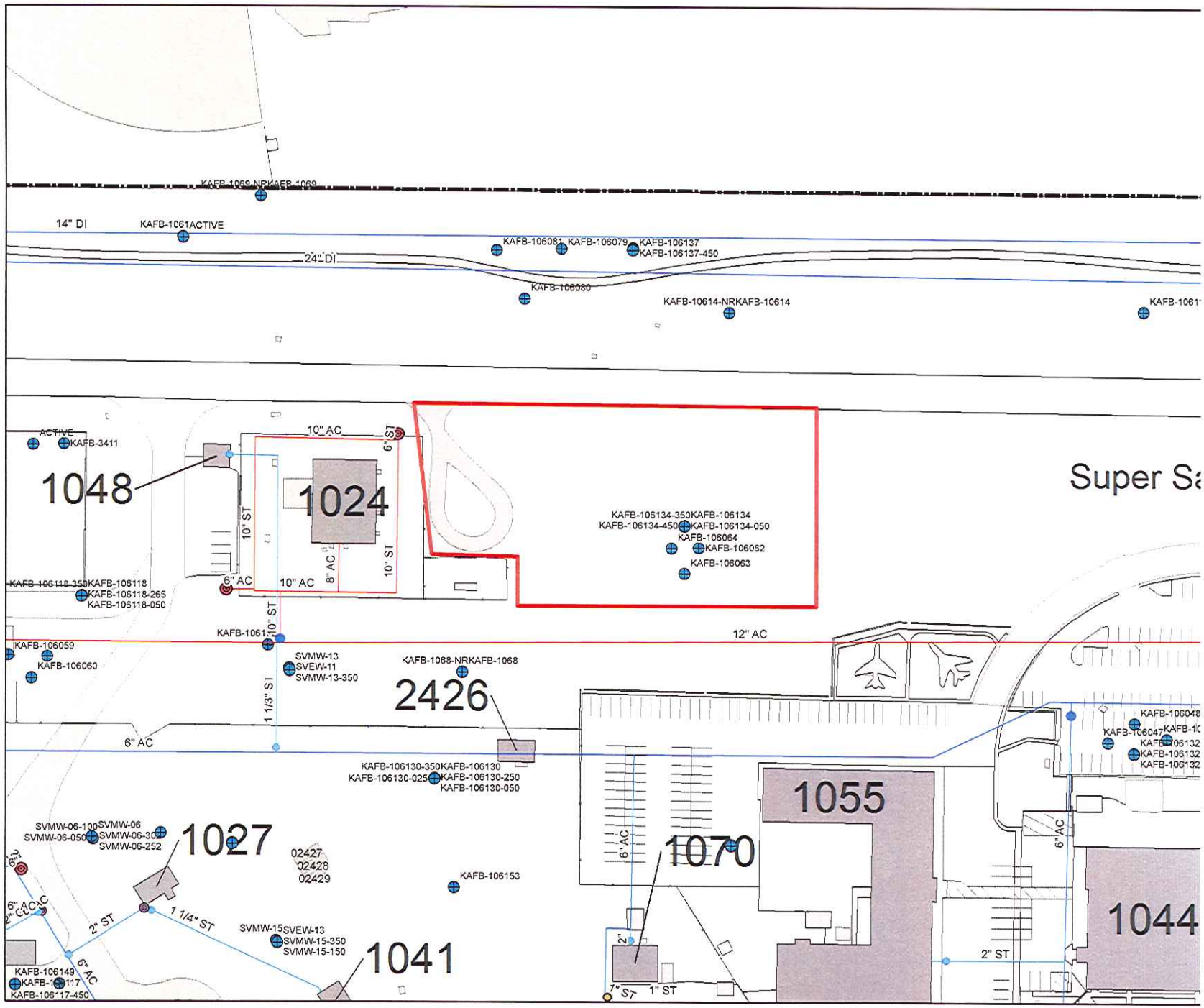

N
W E

Dig Permit # : 1607-014

377 MSG/CEC Digging Permits Mail

From: BAIRD, DOUG M WG-10 USAF AFGSC 377 MSG/CEOIE
Sent: Wednesday, July 27, 2016 8:24 AM
To: 377 MSG/CEC Digging Permits Mail
Subject: RE: Dig Permits 1607-013 & 1607-014 ***VIEW IN HTML***
Signed By: doug.baird@us.af.mil

Morning Christine, Permits 1607-013 & 014 are clear!

From: 377 MSG/CEC Digging Permits Mail
Sent: Monday, July 25, 2016 8:38 AM
To: 377 ABW/SEG Administrative Mailbox <ABWSEG@us.af.mil>; 377 ABW/SEW Administrative Mailbox <377ABWSEW@us.af.mil>; 377 MSG/CED Administrative Mailbox <377MSG.CED@us.af.mil>; BAIRD, DOUG M WG-10 USAF AFGSC 377 MSG/CEOIE <doug.baird@us.af.mil>; BARE, MICHELLE P CTR USAF AFGSC 377 MSG/CEIE <michelle.bare.ctr@us.af.mil>; BARNES, ANTOINE J CTR USAF AFGSC 377 MSG/CEOIP <antoine.barnes.ctr@us.af.mil>; BAROS, RICHARD A JR CTR USAF AFGSC 377 MSG/CEMQ <richard.baros.ctr@us.af.mil>; CARMONA, GERARDO GS-11 USAF AFGSC 377 MSG/SCXP <gerardo.carmona@us.af.mil>; CASHWELL, GRADY K CTR USAF AFGSC 377 MSG/CEMQ <grady.cashwell.ctr@us.af.mil>; CLARKE, JASON P SrA USAF AFGSC 377 AMDS/SGPB <jason.clarke.5@us.af.mil>; CREEK, BEN J WS-10 USAF AFGSC 377 MSG/CEOID <ben.creek@us.af.mil>; DALZELL, MARK A WS-09 USAF AFGSC 377 MSG/CEOIW <mark.dalzell@us.af.mil>; DEBLASSIE, RON S CTR USAF AFGSC 377 MSG/CEMAC <ron.deblassie.ctr@us.af.mil>; EDWARDS, FRANKIE C WG-10 USAF AFGSC 377 MSG/CEOIE <frankie.edwards@us.af.mil>; ELLIS, MICHAEL E CTR USAF AFGSC 377 MSG/SCMO <michael.ellis.17.ctr@us.af.mil>; GARCIA, MARTHA E CIV USAF AFGSC 377 MSG/CEIE <martha.garcia.3@us.af.mil>; GOMEZ, KENNY H CTR USAF AFGSC 377 MSG/CEOHE <kenny.gomez.ctr@us.af.mil>; GROSEK, ADAM M TSgt USAF AFGSC 377 AMDS/SGPB <adam.grosek@us.af.mil>; HAGARTY, PAUL J GS-12 USAF AFGSC 377 AMDS/SGPC <paul.hagarty.1@us.af.mil>; HANECKOW, VALERIE R GS-11 USAF AFGSC 377 SFS/S5C <valerie.haneckow.2@us.af.mil>; JOHNSON, ARTHUR R CTR USAF AFGSC 377 MSG/CEOHP <arthur.johnson.3.ctr@us.af.mil>; LAYMAN, JONATHON K GS-11 USAF AFGSC 377 ABW/SEG <jonathon.layman@us.af.mil>; LUNA, JUSTIN L CTR USAF AFGSC 377 MSG/CEOFP <justin.luna.ctr@us.af.mil>; MENDOZA, DAVID P CTR USAF AFGSC 377 MSG/SCMO <david.mendoza.8.ctr@us.af.mil>; MENDOZA, PAUL P CTR USAF AFGSC 377 MSG/CEOFA <paul.mendoza.ctr@us.af.mil>; MILLER, JOHN A SSgt USAF AFGSC 377 AMDS/SGPB <john.miller.61@us.af.mil>; PEREZ, ARTURO CTR USAF AFGSC 377 MSG/CEMAC <arturo.perez.3.ctr@us.af.mil>; PETERSON, RICHARD W GS-11 USAF AFGSC 377 ABW/SEG <richard.peterson.3@us.af.mil>; RIDLEY, RUSSELL D CTR USAF AFGSC 377 MSG/SCMO <russell.ridley.ctr@us.af.mil>; ROEBUCK, EDDIE V WG-10 USAF AFGSC 377 MSG/CEOID <eddie.roebuck@us.af.mil>; ROMERO, DANIEL WG-10 USAF AFGSC 377 MSG/CEOID <daniel.romero@us.af.mil>; SALAS, JUAN E GS-11 USAF AFGSC 377 MSG/CEF <juan.salas.2@us.af.mil>; SANTIAGO, JOSE A GS-08 USAF AFGSC 377 MSG/CEFT <jose.santiago.2@us.af.mil>; SHEETS, TED L GS-09 USAF AFGSC 377 MSG/CEOE <ted.sheets.1@us.af.mil>; SIPE, CHRISTOPHER W GS-13 USAF AFGSC 377 MSG/CEO <christopher.sipe.2@us.af.mil>; SMITH, CHRISTY L CTR USAF AFGSC 377 MSG/CENMP <christy.smith.2.ctr@us.af.mil>; STONE, KRISTA L GS-08 USAF AFGSC 377 MSG/CEFT <krista.stone@us.af.mil>; THOMPSON, PHILIP L GS-13 USAF AFGSC 377 ABW/SEW <philip.thompson.8@us.af.mil>; VARELA, JAYSON W WG-09 USAF AFGSC 377 MSG/CEOIW

<jayson.varela.1@us.af.mil>; WALKER, BLAKE T WG-09 USAF AFGSC 377 MSG/CEOIUD <blake.walker.3@us.af.mil>; WATERS, MONTE R GS-09 USAF AFGSC 377 SFS/S5C <monte.waters.1@us.af.mil>; CARABAJAL, ISAAC L JR GS-11 USAF AFGSC 377 MSG/CENE <isaac.carabajal@us.af.mil>; HAILEY, JUSTIN G GS-11 USAF AFGSC 377 MSG/CENE <justin.hailey.2@us.af.mil>; KRAEMER, DOUGLAS M GS-11 USAF AFGSC 377 MSG/CENE <douglas.kraemer@us.af.mil>; OLIVER, MICHAEL F GS-12 USAF AFGSC 377 MSG/CENE <michael.oliver.27@us.af.mil>; ADKISSON, NICKOLAS B SSgt USAF AFGSC 377 MSG/246-2229 <nickolas.adkisson@us.af.mil>; GLOWNIA, JUSTIN D SrA USAF AFGSC 377 MSG/CED <justin.glownia@us.af.mil>; SEEKS, ZACHARY R SrA USAF AFGSC 377 MISSION SUPPORT GP/CED <zachary.seeks@us.af.mil>
Subject: Dig Permits 1607-013 & 1607-014 ***VIEW IN HTML***

Good morning all,

Please review and coordinate the following permits:

1607-013 <file:///\\kafbdfs00cd\kirtlandDFS\377MSG\CE_ORG_DATA\CE\Dig%20Permit%20File\1607-013.pdf> B638 - Repair water valve

1607-014 <file:///\\kafbdfs00cd\kirtlandDFS\377MSG\CE_ORG_DATA\CE\Dig%20Permit%20File\1607-014.pdf> E of Bulk Fuels - Insert test wells

Thank you.

//Signed//

Christine M. Goodwin, Drafter

Chenega Integrated Mission Support (CIMS)

Office: 505.846.9091

Fax: 505.846.7931

COMPLETED AND SENT TO GOODWIN 07/26/2016 BJC

BASE CIVIL ENGINEER DIGGING PERMIT REQUEST

DATE: 7/20/16 | Dig Permit #: 16007-014

LOCATION: Kirtland AFB NOV Response Contract

CONTRACT NO., WORK ORDER NO., ECT: W9128F12D0003

IMMEDIATE EMERGENCY _____ NORMAL X

PLANNED DIG DATE August 15, 2016

Detailed description of work (holes, trenching, etc):
- Install 5 wells to approx. 510 feet bgs.
- Trench to 3 feet bgs to install utilities. (250 feet)

PRINTED NAME OF RESPONSIBLE REQUESTOR: CATILIN LACHANCE

CONTACT INFORMATION: Primary: 505.328.4710 Alternate: 505.262.8442

Organization/Company Name: CB:I Federal Services

I understand that that authorization to dig is conditional upon completing the entire form and compliance with the guidelines briefed as well as compliance with applicable OSHA, AFI and AFOSH requirements. I understand the exact location of a buried line may be located approximately four (4) feet on either side of the marked location.

	COORDINATING ORGANIZATION		COORDINATORS ACTIONS & REMARKS	COORDINATORS NAME & PHONE
UTILITIES	ELECTRICAL DISTRIBUTION 846-8145	☐ Marked ☐ Clear Remarks:		
	DOMESTIC AND RAW WATER 846-7663 / 846-1552	☐ Marked ☒ Clear Remarks:		Ben Creek
	SEWER MAINS 846-7663 / 846-1552	☒ Marked ☐ Clear Remarks:	marked green paint pothole	Ben Creek
	GAS MAINS 846-7663 / 846-1552	☐ Marked ☒ Clear Remarks:		Ben Creek
OPERATIONS	PAVEMENTS & STORM DRAINS 846-5650 / 846-2994	☐ Marked ☐ Clear Remarks:		
	IRRIGATION 846-1803	☐ Marked ☐ Clear Remarks:		
	ELECTRICAL 853-6493	☐ Marked ☐ Clear Remarks:		
	CATHODIC PROTECTIONS CECX 846-4633	☐ Marked ☐ Clear Remarks:		
	TRAFFIC & ALARMS 853-6495	☐ Marked ☐ Clear Remarks:		
	FUEL/POL LINES 934-2733	☐ Marked ☐ Clear Remarks:		
	LP GAS, WATER AND SEWER SERVICE LINES/LATERALS 846-5293 / 934-9664	☐ Marked ☐ Clear Remarks:		
	FIRE PROTECTION SYSTEMS 846-5293 / 934-9664	☐ Marked ☐ Clear Remarks:		
CEC	ENVIRONMENTAL Bldg 20685 846-3774	☐ Marked ☐ Clear Remarks:		
OTHER BASE AGENCIES	BIO-ENVIRONMENTAL Bldg 589 846-2670	☐ Marked ☐ Clear Remarks:		
	EOD Bldg 20413 846-2229	☐ Marked ☐ Clear Remarks:		
	COMMUNICATIONS Bldg 20420 846-8411	☐ Marked ☐ Clear Remarks:		
	SECURITY POLICE Resource Protection Bldg 20220 846-6209	☐ Marked ☐ Clear Remarks:		
	FIRE DEPARTMENT 846-8305	☐ Marked ☐ Clear Remarks:		
	WEAPONS SAFETY 841-4229	☐ Marked ☐ Clear Remarks:		
	GROUND SAFETY 853-0268	☐ Marked ☐ Clear Remarks:		
	OTHER AS REQUIRED	☐ Marked ☐ Clear Remarks:		
	HUNT COMPANIES (PRIVATIZED HOUSING)	INITIALS / DATE	Applicant acknowledges that they must contact Hunt corporations for locating Hunt utilities prior to excavation.	
	COMMERCIAL UTILITIES New Mex ONE CALL 260-1990 48 Hours before digging			

CLEARANCE IS: ☐APPROVED (For 30 Days from Approval date) ☐DISSAPPROVED (Reason)

APPROVING CIVIL ENGINEERING SIGNATURE	APPROVAL DATE	EXPIRATION DATE
A COPY OF THIS APPROVED FORM MUST BE AT THE DIGGING SIGHT UNTIL COMPLETE		

377 MSG/CEC Digging Permits Mail

From: JOHNSON, ARTHUR R CTR USAF AFGSC 377 MSG/CEOHP
Sent: Monday, July 25, 2016 11:27 AM
To: 377 MSG/CEC Digging Permits Mail
Subject: RE: Dig Permits 1607-013 & 1607-014 ***VIEW IN HTML***
Signed By: arthur.johnson.3.ctr@us.af.mil

Dig Permit # 1607-013 and 014 Clear

From: 377 MSG/CEC Digging Permits Mail
Sent: Monday, July 25, 2016 8:38 AM
To: 377 ABW/SEG Administrative Mailbox <ABWSEG@us.af.mil>; 377 ABW/SEW Administrative Mailbox <377ABWSEW@us.af.mil>; 377 MSG/CED Administrative Mailbox <377MSG.CED@us.af.mil>; BAIRD, DOUG M WG-10 USAF AFGSC 377 MSG/CEOIE <doug.baird@us.af.mil>; BARE, MICHELLE P CTR USAF AFGSC 377 MSG/CEIE <michelle.bare.ctr@us.af.mil>; BARNES, ANTOINE J CTR USAF AFGSC 377 MSG/CEOIP <antoine.barnes.ctr@us.af.mil>; BAROS, RICHARD A JR CTR USAF AFGSC 377 MSG/CEMQ <richard.baros.ctr@us.af.mil>; CARMONA, GERARDO GS-11 USAF AFGSC 377 MSG/SCXP <gerardo.carmona@us.af.mil>; CASHWELL, GRADY K CTR USAF AFGSC 377 MSG/CEMQ <grady.cashwell.ctr@us.af.mil>; CLARKE, JASON P SrA USAF AFGSC 377 AMDS/SGPB <jason.clarke.5@us.af.mil>; CREEK, BEN J WS-10 USAF AFGSC 377 MSG/CEOID <ben.creek@us.af.mil>; DALZELL, MARK A WS-09 USAF AFGSC 377 MSG/CEOIW <mark.dalzell@us.af.mil>; DEBLASSIE, RON S CTR USAF AFGSC 377 MSG/CEMAC <ron.deblassie.ctr@us.af.mil>; EDWARDS, FRANKIE C WG-10 USAF AFGSC 377 MSG/CEOIE <frankie.edwards@us.af.mil>; ELLIS, MICHAEL E CTR USAF AFGSC 377 MSG/SCMO <michael.ellis.17.ctr@us.af.mil>; GARCIA, MARTHA E CIV USAF AFGSC 377 MSG/CEIE <martha.garcia.3@us.af.mil>; GOMEZ, KENNY H CTR USAF AFGSC 377 MSG/CEOHE <kenny.gomez.ctr@us.af.mil>; GROSEK, ADAM M TSgt USAF AFGSC 377 AMDS/SGPB <adam.grosek@us.af.mil>; HAGARTY, PAUL J GS-12 USAF AFGSC 377 AMDS/SGPC <paul.hagarty.1@us.af.mil>; HANECKOW, VALERIE R GS-11 USAF AFGSC 377 SFS/S5C <valerie.haneckow.2@us.af.mil>; JOHNSON, ARTHUR R CTR USAF AFGSC 377 MSG/CEOHP <arthur.johnson.3.ctr@us.af.mil>; LAYMAN, JONATHON K GS-11 USAF AFGSC 377 ABW/SEG <jonathon.layman@us.af.mil>; LUNA, JUSTIN L CTR USAF AFGSC 377 MSG/CEOFP <justin.luna.ctr@us.af.mil>; MENDOZA, DAVID P CTR USAF AFGSC 377 MSG/SCMO <david.mendoza.8.ctr@us.af.mil>; MENDOZA, PAUL P CTR USAF AFGSC 377 MSG/CEOFA <paul.mendoza.ctr@us.af.mil>; MILLER, JOHN A SSgt USAF AFGSC 377 AMDS/SGPB <john.miller.61@us.af.mil>; PEREZ, ARTURO CTR USAF AFGSC 377 MSG/CEMAC <arturo.perez.3.ctr@us.af.mil>; PETERSON, RICHARD W GS-11 USAF AFGSC 377 ABW/SEG <richard.peterson.3@us.af.mil>; RIDLEY, RUSSELL D CTR USAF AFGSC 377 MSG/SCMO <russell.ridley.ctr@us.af.mil>; ROEBUCK, EDDIE V WG-10 USAF AFGSC 377 MSG/CEOID <eddie.roebuck@us.af.mil>; ROMERO, DANIEL WG-10 USAF AFGSC 377 MSG/CEOID <daniel.romero@us.af.mil>; SALAS, JUAN E GS-11 USAF AFGSC 377 MSG/CEF <juan.salas.2@us.af.mil>; SANTIAGO, JOSE A GS-08 USAF AFGSC 377 MSG/CEFT <jose.santiago.2@us.af.mil>; SHEETS, TED L GS-09 USAF AFGSC 377 MSG/CEOE <ted.sheets.1@us.af.mil>; SIPE, CHRISTOPHER W GS-13 USAF AFGSC 377 MSG/CEO <christopher.sipe.2@us.af.mil>; SMITH, CHRISTY L CTR USAF AFGSC 377 MSG/CENMP <christy.smith.2.ctr@us.af.mil>; STONE, KRISTA L GS-08 USAF AFGSC 377 MSG/CEFT <krista.stone@us.af.mil>; THOMPSON, PHILIP L GS-13 USAF AFGSC 377 ABW/SEW <philip.thompson.8@us.af.mil>; VARELA, JAYSON W WG-09 USAF AFGSC 377 MSG/CEOIW

<jayson.varela.1@us.af.mil>; WALKER, BLAKE T WG-09 USAF AFGSC 377 MSG/CEOIUD <blake.walker.3@us.af.mil>; WATERS, MONTE R GS-09 USAF AFGSC 377 SFS/S5C <monte.waters.1@us.af.mil>; CARABAJAL, ISAAC L JR GS-11 USAF AFGSC 377 MSG/CENE <isaac.carabajal@us.af.mil>; HAILEY, JUSTIN G GS-11 USAF AFGSC 377 MSG/CENE <justin.hailey.2@us.af.mil>; KRAEMER, DOUGLAS M GS-11 USAF AFGSC 377 MSG/CENE <douglas.kraemer@us.af.mil>; OLIVER, MICHAEL F GS-12 USAF AFGSC 377 MSG/CENE <michael.oliver.27@us.af.mil>; ADKISSON, NICKOLAS B SSgt USAF AFGSC 377 MSG/246-2229 <nickolas.adkisson@us.af.mil>; GLOWNIA, JUSTIN D SrA USAF AFGSC 377 MSG/CED <justin.glownia@us.af.mil>; SEEKS, ZACHARY R SrA USAF AFGSC 377 MISSION SUPPORT GP/CED <zachary.seeks@us.af.mil>
Subject: Dig Permits 1607-013 & 1607-014 ***VIEW IN HTML***

Good morning all,

Please review and coordinate the following permits:

1607-013 <file:///\\kafbdfs00cd\kirtlandDFS\377MSG\CE_ORG_DATA\CE\Dig%20Permit%20File\1607-013.pdf> B638 - Repair water valve

1607-014 <file:///\\kafbdfs00cd\kirtlandDFS\377MSG\CE_ORG_DATA\CE\Dig%20Permit%20File\1607-014.pdf> E of Bulk Fuels - Insert test wells

Thank you.

//Signed//

Christine M. Goodwin, Drafter

Chenega Integrated Mission Support (CIMS)

Office: 505.846.9091

Fax: 505.846.7931

BASE CIVIL ENGINEER DIGGING PERMIT REQUEST

DATE: 7/20/16 | Dig Permit #: 1607-014

LOCATION: Kirtland AFB NOV Response Contract

CONTRACT NO., WORK ORDER NO., ECT: W9128F-12-D0003

IMMEDIATE EMERGENCY _____ NORMAL X

PLANNED DIG DATE August 15, 2016

Detailed description of work (holes, trenching, etc):
- Install 5 wells to approx. 510 feet bgs.
- Trench to 3 feet bgs to install utilities. (250 feet)

PRINTED NAME OF RESPONSIBLE REQUESTOR:	CONTACT INFORMATION:	Organization/Company Name:
CAITLIN LACHANCE	Primary: 505.328.4710 Alternate: 505.262.8942	CB:I Federal Services

I understand that that authorization to dig is conditional upon completing the entire form and compliance with the guidelines briefed as well as compliance with applicable OSHA, AFI and AFOSH requirements. I understand the exact location of a buried line may be located approximately four (4) feet on either side of the marked location.

	COORDINATING ORGANIZATION		COORDINATORS ACTIONS & REMARKS	COORDINATORS NAME & PHONE
UTILITIES	ELECTRICAL DISTRIBUTION 846-8145	☐ Marked ☐ Clear Remarks:		
	DOMESTIC AND RAW WATER 846-7863 / 846-1552	☐ Marked ☐ Clear Remarks:		
	SEWER MAINS 846-7863 / 846-1552	☐ Marked ☐ Clear Remarks:		
	GAS MAINS 846-7863 / 846-1552	☐ Marked ☐ Clear Remarks:		
OPERATIONS	PAVEMENTS & STORM DRAINS 846-5650 / 846-2994	☐ Marked ☐ Clear Remarks:		
	IRRIGATION 846-1803	☐ Marked ☒ Clear Remarks:		KEN GOMEZ 846-1803
	ELECTRICAL 853-6493	☐ Marked ☐ Clear Remarks:		
	CATHODIC PROTECTIONS CECX 846-4633	☐ Marked ☐ Clear Remarks:		
	TRAFFIC & ALARMS 853-6495	☐ Marked ☐ Clear Remarks:		
	FUEL/POL LINES 934-2733	☐ Marked ☐ Clear Remarks:		
	LP GAS, WATER AND SEWER SERVICE LINES/LATERALS 846-5293 / 934-9664	☐ Marked ☐ Clear Remarks:		
	FIRE PROTECTION SYSTEMS 846-5293 / 934-9664	☐ Marked ☐ Clear Remarks:		
CEC	ENVIRONMENTAL Bldg 20685 846-3774	☐ Marked ☐ Clear Remarks:		
OTHER BASE AGENCIES	BIO-ENVIRONMENTAL Bldg 589 846-2670	☐ Marked ☐ Clear Remarks:		
	EOD Bldg 20413 846-2229	☐ Marked ☐ Clear Remarks:		
	COMMUNICATIONS Bldg 20420 846-9411	☐ Marked ☐ Clear Remarks:		
	SECURITY POLICE Resource Protection Bldg 20220 846-6209	☐ Marked ☐ Clear Remarks:		
	FIRE DEPARTMENT 846-8305	☐ Marked ☐ Clear Remarks:		
	WEAPONS SAFETY 841-4229	☐ Marked ☐ Clear Remarks:		
	GROUND SAFETY 853-0268	☐ Marked ☐ Clear Remarks:		
	OTHER AS REQUIRED	☐ Marked ☐ Clear Remarks:		
	HUNT COMPANIES (PRIVATIZED HOUSING)	☐ INITIALS ☐ DATE	Applicant acknowledges that they must contact Hunt corporations for locating Hunt utilities prior to excavation.	
	COMMERCIAL UTILITIES New Mex ONE CALL 260-1990 48 Hours before digging			

CLEARANCE IS: ☐APPROVED (For 30 Days from Approval date) ☐DISSAPPROVED (Reason)

APPROVING CIVIL ENGINEERING SIGNATURE	APPROVAL DATE	EXPIRATION DATE
A COPY OF THIS APPROVED FORM MUST BE AT THE DIGGING SIGHT UNTIL COMPLETE		

377 MSG/CEC Digging Permits Mail

From: MENDOZA, PAUL P CTR USAF AFGSC 377 MSG/CEOFA
Sent: Thursday, July 28, 2016 9:13 AM
To: 377 MSG/CEC Digging Permits Mail
Cc: ARAGON, ELIAS R CTR USAF AFGSC 377 MSG/CEOHS
Subject: RE: Dig Permits 1607-013 & 1607-014 ***VIEW IN HTML***
Signed By: paul.mendoza.ctr@us.af.mil

Alarm Shop-
1607-013/clear
1607-014/clear

Paul M.
-----Original Message-----
From: 377 MSG/CEC Digging Permits Mail
Sent: Monday, July 25, 2016 8:38 AM
To: 377 ABW/SEG Administrative Mailbox <ABWSEG@us.af.mil>; 377 ABW/SEW Administrative Mailbox <377ABWSEW@us.af.mil>; 377 MSG/CED Administrative Mailbox <377MSG.CED@us.af.mil>; BAIRD, DOUG M WG-10 USAF AFGSC 377 MSG/CEOIE <doug.baird@us.af.mil>; BARE, MICHELLE P CTR USAF AFGSC 377 MSG/CEIE <michelle.bare.ctr@us.af.mil>; BARNES, ANTOINE J CTR USAF AFGSC 377 MSG/CEOIP <antoine.barnes.ctr@us.af.mil>; BAROS, RICHARD A JR CTR USAF AFGSC 377 MSG/CEMQ <richard.baros.ctr@us.af.mil>; CARMONA, GERARDO GS-11 USAF AFGSC 377 MSG/SCXP <gerardo.carmona@us.af.mil>; CASHWELL, GRADY K CTR USAF AFGSC 377 MSG/CEMQ <grady.cashwell.ctr@us.af.mil>; CLARKE, JASON P SrA USAF AFGSC 377 AMDS/SGPB <jason.clarke.5@us.af.mil>; CREEK, BEN J WS-10 USAF AFGSC 377 MSG/CEOID <ben.creek@us.af.mil>; DALZELL, MARK A WS-09 USAF AFGSC 377 MSG/CEOIW <mark.dalzell@us.af.mil>; DEBLASSIE, RON S CTR USAF AFGSC 377 MSG/CEMAC <ron.deblassie.ctr@us.af.mil>; EDWARDS, FRANKIE C WG-10 USAF AFGSC 377 MSG/CEOIE <frankie.edwards@us.af.mil>; ELLIS, MICHAEL E CTR USAF AFGSC 377 MSG/SCMO <michael.ellis.17.ctr@us.af.mil>; GARCIA, MARTHA E CIV USAF AFGSC 377 MSG/CEIE <martha.garcia.3@us.af.mil>; GOMEZ, KENNY H CTR USAF AFGSC 377 MSG/CEOHE <kenny.gomez.ctr@us.af.mil>; GROSEK, ADAM M TSgt USAF AFGSC 377 AMDS/SGPB <adam.grosek@us.af.mil>; HAGARTY, PAUL J GS-12 USAF AFGSC 377 AMDS/SGPC <paul.hagarty.1@us.af.mil>; HANECKOW, VALERIE R GS-11 USAF AFGSC 377 SFS/S5C <valerie.haneckow.2@us.af.mil>; JOHNSON, ARTHUR R CTR USAF AFGSC 377 MSG/CEOHP <arthur.johnson.3.ctr@us.af.mil>; LAYMAN, JONATHON K GS-11 USAF AFGSC 377 ABW/SEG <jonathon.layman@us.af.mil>; LUNA, JUSTIN L CTR USAF AFGSC 377 MSG/CEOFP <justin.luna.ctr@us.af.mil>; MENDOZA, DAVID P CTR USAF AFGSC 377 MSG/SCMO <david.mendoza.8.ctr@us.af.mil>; MENDOZA, PAUL P CTR USAF AFGSC 377 MSG/CEOFA <paul.mendoza.ctr@us.af.mil>; MILLER, JOHN A SSgt USAF AFGSC 377 AMDS/SGPB <john.miller.61@us.af.mil>; PEREZ, ARTURO CTR USAF AFGSC 377 MSG/CEMAC <arturo.perez.3.ctr@us.af.mil>; PETERSON, RICHARD W GS-11 USAF AFGSC 377 ABW/SEG <richard.peterson.3@us.af.mil>; RIDLEY, RUSSELL D CTR USAF AFGSC 377 MSG/SCMO <russell.ridley.ctr@us.af.mil>; ROEBUCK, EDDIE V WG-10 USAF AFGSC 377 MSG/CEOID <eddie.roebuck@us.af.mil>; ROMERO, DANIEL WG-10 USAF AFGSC 377 MSG/CEOID <daniel.romero@us.af.mil>; SALAS, JUAN E

GS-11 USAF AFGSC 377 MSG/CEF <juan.salas.2@us.af.mil>; SANTIAGO, JOSE A GS-08 USAF AFGSC 377 MSG/CEFT <jose.santiago.2@us.af.mil>; SHEETS, TED L GS-09 USAF AFGSC 377 MSG/CEOE <ted.sheets.1@us.af.mil>; SIPE, CHRISTOPHER W GS-13 USAF AFGSC 377 MSG/CEO <christopher.sipe.2@us.af.mil>; SMITH, CHRISTY L CTR USAF AFGSC 377 MSG/CENMP <christy.smith.2.ctr@us.af.mil>; STONE, KRISTA L GS-08 USAF AFGSC 377 MSG/CEFT <krista.stone@us.af.mil>; THOMPSON, PHILIP L GS-13 USAF AFGSC 377 ABW/SEW <philip.thompson.8@us.af.mil>; VARELA, JAYSON W WG-09 USAF AFGSC 377 MSG/CEOIW <jayson.varela.1@us.af.mil>; WALKER, BLAKE T WG-09 USAF AFGSC 377 MSG/CEOIUD <blake.walker.3@us.af.mil>; WATERS, MONTE R GS-09 USAF AFGSC 377 SFS/S5C <monte.waters.1@us.af.mil>; CARABAJAL, ISAAC L JR GS-11 USAF AFGSC 377 MSG/CENE <isaac.carabajal@us.af.mil>; HAILEY, JUSTIN G GS-11 USAF AFGSC 377 MSG/CENE <justin.hailey.2@us.af.mil>; KRAEMER, DOUGLAS M GS-11 USAF AFGSC 377 MSG/CENE <douglas.kraemer@us.af.mil>; OLIVER, MICHAEL F GS-12 USAF AFGSC 377 MSG/CENE <michael.oliver.27@us.af.mil>; ADKISSON, NICKOLAS B SSgt USAF AFGSC 377 MSG/246-2229 <nickolas.adkisson@us.af.mil>; GLOWNIA, JUSTIN D SrA USAF AFGSC 377 MSG/CED <justin.glownia@us.af.mil>; SEEKS, ZACHARY R SrA USAF AFGSC 377 MISSION SUPPORT GP/CED <zachary.seeks@us.af.mil>
Subject: Dig Permits 1607-013 & 1607-014 ***VIEW IN HTML***

Good morning all,

Please review and coordinate the following permits:

1607-013
<file:///\\kafbdfs00cd\kirtlandDFS\377MSG\CE_ORG_DATA\CE\Dig%20Permit%20File\1607-013.pdf> B638 - Repair water valve

1607-014
<file:///\\kafbdfs00cd\kirtlandDFS\377MSG\CE_ORG_DATA\CE\Dig%20Permit%20File\1607-014.pdf> E of Bulk Fuels - Insert test wells

Thank you.

//Signed//

Christine M. Goodwin, Drafter

Chenega Integrated Mission Support (CIMS)

Office: 505.846.9091

Fax: 505.846.7931

GOODWIN, CHRISTINE M CTR USAF AFGSC 377 MSG/CEMND

From: LUNA, JUSTIN L CTR USAF AFGSC 377 MSG/CEOFP
Sent: Wednesday, July 27, 2016 4:43 PM
To: GOODWIN, CHRISTINE M CTR USAF AFGSC 377 MSG/CEMND
Subject: digs

1607-007,005,009,011, ALL MARKED!.....1607-006,010,012,013,014 ALL CLEAR! THANKS!

377 MSG/CEC Digging Permits Mail

From: BARNES, ANTOINE J CTR USAF AFGSC 377 MSG/CEOIP
Sent: Monday, July 25, 2016 9:47 AM
To: 377 MSG/CEC Digging Permits Mail
Subject: RE: Dig Permits 1607-013 & 1607-014 ***VIEW IN HTML***
Signed By: antoine.barnes.ctr@us.af.mil

All utilities marked

From: 377 MSG/CEC Digging Permits Mail
Sent: Monday, July 25, 2016 8:38 AM
To: 377 ABW/SEG Administrative Mailbox <ABWSEG@us.af.mil>; 377 ABW/SEW Administrative Mailbox <377ABWSEW@us.af.mil>; 377 MSG/CED Administrative Mailbox <377MSG.CED@us.af.mil>; BAIRD, DOUG M WG-10 USAF AFGSC 377 MSG/CEOIE <doug.baird@us.af.mil>; BARE, MICHELLE P CTR USAF AFGSC 377 MSG/CEIE <michelle.bare.ctr@us.af.mil>; BARNES, ANTOINE J CTR USAF AFGSC 377 MSG/CEOIP <antoine.barnes.ctr@us.af.mil>; BAROS, RICHARD A JR CTR USAF AFGSC 377 MSG/CEMQ <richard.baros.ctr@us.af.mil>; CARMONA, GERARDO GS-11 USAF AFGSC 377 MSG/SCXP <gerardo.carmona@us.af.mil>; CASHWELL, GRADY K CTR USAF AFGSC 377 MSG/CEMQ <grady.cashwell.ctr@us.af.mil>; CLARKE, JASON P SrA USAF AFGSC 377 AMDS/SGPB <jason.clarke.5@us.af.mil>; CREEK, BEN J WS-10 USAF AFGSC 377 MSG/CEOID <ben.creek@us.af.mil>; DALZELL, MARK A WS-09 USAF AFGSC 377 MSG/CEOIW <mark.dalzell@us.af.mil>; DEBLASSIE, RON S CTR USAF AFGSC 377 MSG/CEMAC <ron.deblassie.ctr@us.af.mil>; EDWARDS, FRANKIE C WG-10 USAF AFGSC 377 MSG/CEOIE <frankie.edwards@us.af.mil>; ELLIS, MICHAEL E CTR USAF AFGSC 377 MSG/SCMO <michael.ellis.17.ctr@us.af.mil>; GARCIA, MARTHA E CIV USAF AFGSC 377 MSG/CEIE <martha.garcia.3@us.af.mil>; GOMEZ, KENNY H CTR USAF AFGSC 377 MSG/CEOHE <kenny.gomez.ctr@us.af.mil>; GROSEK, ADAM M TSgt USAF AFGSC 377 AMDS/SGPB <adam.grosek@us.af.mil>; HAGARTY, PAUL J GS-12 USAF AFGSC 377 AMDS/SGPC <paul.hagarty.1@us.af.mil>; HANECKOW, VALERIE R GS-11 USAF AFGSC 377 SFS/S5C <valerie.haneckow.2@us.af.mil>; JOHNSON, ARTHUR R CTR USAF AFGSC 377 MSG/CEOHP <arthur.johnson.3.ctr@us.af.mil>; LAYMAN, JONATHON K GS-11 USAF AFGSC 377 ABW/SEG <jonathon.layman@us.af.mil>; LUNA, JUSTIN L CTR USAF AFGSC 377 MSG/CEOFP <justin.luna.ctr@us.af.mil>; MENDOZA, DAVID P CTR USAF AFGSC 377 MSG/SCMO <david.mendoza.8.ctr@us.af.mil>; MENDOZA, PAUL P CTR USAF AFGSC 377 MSG/CEOFA <paul.mendoza.ctr@us.af.mil>; MILLER, JOHN A SSgt USAF AFGSC 377 AMDS/SGPB <john.miller.61@us.af.mil>; PEREZ, ARTURO CTR USAF AFGSC 377 MSG/CEMAC <arturo.perez.3.ctr@us.af.mil>; PETERSON, RICHARD W GS-11 USAF AFGSC 377 ABW/SEG <richard.peterson.3@us.af.mil>; RIDLEY, RUSSELL D CTR USAF AFGSC 377 MSG/SCMO <russell.ridley.ctr@us.af.mil>; ROEBUCK, EDDIE V WG-10 USAF AFGSC 377 MSG/CEOID <eddie.roebuck@us.af.mil>; ROMERO, DANIEL WG-10 USAF AFGSC 377 MSG/CEOID <daniel.romero@us.af.mil>; SALAS, JUAN E GS-11 USAF AFGSC 377 MSG/CEF <juan.salas.2@us.af.mil>; SANTIAGO, JOSE A GS-08 USAF AFGSC 377 MSG/CEFT <jose.santiago.2@us.af.mil>; SHEETS, TED L GS-09 USAF AFGSC 377 MSG/CEOE <ted.sheets.1@us.af.mil>; SIPE, CHRISTOPHER W GS-13 USAF AFGSC 377 MSG/CEO <christopher.sipe.2@us.af.mil>; SMITH, CHRISTY L CTR USAF AFGSC 377 MSG/CENMP <christy.smith.2.ctr@us.af.mil>; STONE, KRISTA L GS-08 USAF AFGSC 377 MSG/CEFT <krista.stone@us.af.mil>; THOMPSON, PHILIP L GS-13 USAF AFGSC 377 ABW/SEW <philip.thompson.8@us.af.mil>; VARELA, JAYSON W WG-09 USAF AFGSC 377 MSG/CEOIW

<jayson.varela.1@us.af.mil>; WALKER, BLAKE T WG-09 USAF AFGSC 377 MSG/CEOIUD <blake.walker.3@us.af.mil>; WATERS, MONTE R GS-09 USAF AFGSC 377 SFS/S5C <monte.waters.1@us.af.mil>; CARABAJAL, ISAAC L JR GS-11 USAF AFGSC 377 MSG/CENE <isaac.carabajal@us.af.mil>; HAILEY, JUSTIN G GS-11 USAF AFGSC 377 MSG/CENE <justin.hailey.2@us.af.mil>; KRAEMER, DOUGLAS M GS-11 USAF AFGSC 377 MSG/CENE <douglas.kraemer@us.af.mil>; OLIVER, MICHAEL F GS-12 USAF AFGSC 377 MSG/CENE <michael.oliver.27@us.af.mil>; ADKISSON, NICKOLAS B SSgt USAF AFGSC 377 MSG/246-2229 <nickolas.adkisson@us.af.mil>; GLOWNIA, JUSTIN D SrA USAF AFGSC 377 MSG/CED <justin.glownia@us.af.mil>; SEEKS, ZACHARY R SrA USAF AFGSC 377 MISSION SUPPORT GP/CED <zachary.seeks@us.af.mil>
Subject: Dig Permits 1607-013 & 1607-014 ***VIEW IN HTML***

Good morning all,

Please review and coordinate the following permits:

1607-013 <file:///\\kafbdfs00cd\kirtlandDFS\377MSG\CE_ORG_DATA\CE\Dig%20Permit%20File\1607-013.pdf> B638 - Repair water valve

1607-014 <file:///\\kafbdfs00cd\kirtlandDFS\377MSG\CE_ORG_DATA\CE\Dig%20Permit%20File\1607-014.pdf> E of Bulk Fuels - Insert test wells

Thank you.

//Signed//

Christine M. Goodwin, Drafter

Chenega Integrated Mission Support (CIMS)

Office: 505.846.9091

Fax: 505.846.7931

GW

377 MSG/CEC Digging Permits Mail

From: BARE, MICHELLE P CTR USAF AFGSC 377 MSG/CEIE
Sent: Thursday, July 28, 2016 8:10 AM
To: 377 MSG/CEC Digging Permits Mail
Cc: GARCIA, MARTHA E CIV USAF AFGSC 377 MSG/CEIE
Subject: RE: Dig Permits 1607-013 & 1607-014 ***VIEW IN HTML***
Attachments: 1607-013.pdf; 1607-014.pdf
Signed By: michelle.bare.ctr@us.af.mil

Good morning,

Attached are the Checklist of Environmental Requirements that apply to these permits.

Please note the following guidance: AQ3, WQ2, NR5, and CR3

Thanks so much,

Michelle

Michelle Bare

Kirtland AFB CTR - NEPA Group

377 MSG/CEIE

2050 Wyoming Blvd SE, Rm 116a

Kirtland AFB NM 87117

505-846-3774

FAX 505-846-4000

From: 377 MSG/CEC Digging Permits Mail
Sent: Monday, July 25, 2016 8:38 AM
To: 377 ABW/SEG Administrative Mailbox <ABWSEG@us.af.mil>; 377 ABW/SEW Administrative Mailbox <377ABWSEW@us.af.mil>; 377 MSG/CED Administrative Mailbox <377MSG.CED@us.af.mil>; BAIRD, DOUG M WG-10 USAF AFGSC 377 MSG/CEOIE <doug.baird@us.af.mil>; BARE, MICHELLE P CTR USAF AFGSC 377 MSG/CEIE <michelle.bare.ctr@us.af.mil>; BARNES, ANTOINE J CTR USAF AFGSC 377 MSG/CEOIP <antoine.barnes.ctr@us.af.mil>; BAROS, RICHARD A JR CTR USAF AFGSC 377 MSG/CEMQ <richard.baros.ctr@us.af.mil>; CARMONA, GERARDO GS-11 USAF AFGSC 377 MSG/SCXP <gerardo.carmona@us.af.mil>; CASHWELL, GRADY K CTR USAF AFGSC 377 MSG/CEMQ <grady.cashwell.ctr@us.af.mil>; CLARKE, JASON P SrA USAF AFGSC 377 AMDS/SGPB <jason.clarke.5@us.af.mil>; CREEK, BEN J WS-10 USAF AFGSC 377 MSG/CEOID <ben.creek@us.af.mil>; DALZELL, MARK A WS-09 USAF AFGSC 377 MSG/CEOIW <mark.dalzell@us.af.mil>; DEBLASSIE, RON S CTR USAF AFGSC 377 MSG/CEMAC <ron.deblassie.ctr@us.af.mil>; EDWARDS, FRANKIE C WG-10 USAF AFGSC 377 MSG/CEOIE <frankie.edwards@us.af.mil>; ELLIS, MICHAEL E CTR USAF AFGSC 377 MSG/SCMO <michael.ellis.17.ctr@us.af.mil>; GARCIA, MARTHA E CIV USAF AFGSC 377 MSG/CEIE <martha.garcia.3@us.af.mil>; GOMEZ, KENNY H CTR USAF AFGSC 377 MSG/CEOHE <kenny.gomez.ctr@us.af.mil>; GROSEK, ADAM M TSgt USAF AFGSC 377 AMDS/SGPB <adam.grosek@us.af.mil>; HAGARTY, PAUL J GS-12 USAF AFGSC 377 AMDS/SGPC <paul.hagarty.1@us.af.mil>; HANECKOW, VALERIE R GS-11 USAF AFGSC 377 SFS/S5C <valerie.haneckow.2@us.af.mil>; JOHNSON, ARTHUR R CTR USAF AFGSC 377 MSG/CEOHP <arthur.johnson.3.ctr@us.af.mil>; LAYMAN, JONATHON K GS-11 USAF AFGSC 377 ABW/SEG <jonathon.layman@us.af.mil>; LUNA, JUSTIN L CTR USAF AFGSC 377 MSG/CEOFP <justin.luna.ctr@us.af.mil>; MENDOZA, DAVID P CTR USAF AFGSC 377 MSG/SCMO <david.mendoza.8.ctr@us.af.mil>; MENDOZA, PAUL P CTR USAF AFGSC 377 MSG/CEOFA <paul.mendoza.ctr@us.af.mil>; MILLER, JOHN A SSgt USAF AFGSC 377 AMDS/SGPB <john.miller.61@us.af.mil>; PEREZ, ARTURO CTR USAF AFGSC 377 MSG/CEMAC <arturo.perez.3.ctr@us.af.mil>; PETERSON, RICHARD W GS-11 USAF AFGSC 377 ABW/SEG <richard.peterson.3@us.af.mil>; RIDLEY, RUSSELL D CTR USAF AFGSC 377 MSG/SCMO <russell.ridley.ctr@us.af.mil>; ROEBUCK, EDDIE V WG-10 USAF AFGSC 377 MSG/CEOID <eddie.roebuck@us.af.mil>; ROMERO, DANIEL WG-10 USAF AFGSC 377 MSG/CEOID <daniel.romero@us.af.mil>; SALAS, JUAN E GS-11 USAF AFGSC 377 MSG/CEF <juan.salas.2@us.af.mil>; SANTIAGO, JOSE A GS-08 USAF AFGSC 377 MSG/CEFT <jose.santiago.2@us.af.mil>; SHEETS, TED L GS-09 USAF AFGSC 377 MSG/CEOE <ted.sheets.1@us.af.mil>; SIPE, CHRISTOPHER W GS-13 USAF AFGSC 377 MSG/CEO <christopher.sipe.2@us.af.mil>; SMITH, CHRISTY L CTR USAF AFGSC 377 MSG/CENMP <christy.smith.2.ctr@us.af.mil>; STONE, KRISTA L GS-08 USAF AFGSC 377 MSG/CEFT <krista.stone@us.af.mil>; THOMPSON, PHILIP L GS-13 USAF AFGSC 377 ABW/SEW <philip.thompson.8@us.af.mil>; VARELA, JAYSON W WG-09 USAF AFGSC 377 MSG/CEOIW <jayson.varela.1@us.af.mil>; WALKER, BLAKE T WG-09 USAF AFGSC 377 MSG/CEOIUD <blake.walker.3@us.af.mil>; WATERS, MONTE R GS-09 USAF AFGSC 377 SFS/S5C <monte.waters.1@us.af.mil>; CARABAJAL, ISAAC L JR GS-11 USAF AFGSC 377 MSG/CENE <isaac.carabajal@us.af.mil>; HAILEY, JUSTIN G GS-11 USAF AFGSC 377 MSG/CENE <justin.hailey.2@us.af.mil>; KRAEMER, DOUGLAS M GS-11 USAF AFGSC 377 MSG/CENE <douglas.kraemer@us.af.mil>; OLIVER, MICHAEL F GS-12 USAF AFGSC 377 MSG/CENE <michael.oliver.27@us.af.mil>; ADKISSON, NICKOLAS B SSgt USAF AFGSC 377 MSG/246-2229 <nickolas.adkisson@us.af.mil>; GLOWNIA, JUSTIN D SrA USAF AFGSC 377 MSG/CED <justin.glownia@us.af.mil>; SEEKS, ZACHARY R SrA USAF AFGSC 377 MISSION SUPPORT GP/CED <zachary.seeks@us.af.mil>
Subject: Dig Permits 1607-013 & 1607-014 ***VIEW IN HTML***

Work Order No:_____
RCS No:_____
Dig Permit No: 1607-014
MHMV No:_____

Kirtland AFB Checklist of Environmental Requirements for Proposed Project

	Air Quality Program – POC: Ms. Andria Cuevas @ 846-2522 or via e-mail: kirtlandairquality@us.af.mil
AQ 1	**Asbestos:** Due to the age of the building, asbestos-containing material (ACM) may be present. NO RENOVATION/DEMOLITION SHALL BEGIN PRIOR TO CE APPROVAL OF AF FORM 332 AND ASBESTOS SAMPLING, AS REQUIRED. If suspected ACM is encountered and will be disturbed, then asbestos abatement of the area to be renovated must be completed prior to starting the proposed work on the building. ***NOTE:*** NESHAP Notification to the AEHD in accordance with 20.11.20.22 NMAC is required for ACM disturbance. Additional guidance and forms can be found at the City of Albuquerque's website: http://www.cabq.gov/airquality/documents/AsbestosDemoRenoNoticationInstructionsandForm_2015.xls
AQ 2	**Lead Based Paint:** Due to the age of the building, LBP may be present; files are available for review. Contact Air Quality Program personnel to coordinate access to files. If suspected LBP is encountered and will be disturbed, LBP sampling should be performed by the contractor with abatement as necessary prior to commencing the proposed work on the building. ***Coordination/Consultation with Air Quality Program POC required.***
AQ 3	**Ground Disturbance:** • If the total ground disturbance is ***greater than or equal to ¾ acre***, then a Fugitive Dust Permit will be required. ***Fugitive Dust Permits must be submitted to the Air Quality Program for review***, and 377 ABW/CC signature, five (5) weeks prior to the anticipated start date of soil disturbance. ***NOTE***: AEHD AQD requires all Fugitive Dust Permits be submitted to their office 10 business days prior to anticipated start date of soil disturbance and will require a site inspection prior to issuing the permit. • If the total ground disturbance is ***less than ¾ of an acre***, then a fugitive dust permit is not required; however, the contractor must still comply with the following general provisions from 20.11.20.12 NMAC: "Each person shall use reasonably available control measures or any other effective control measure during active operations or on inactive disturbed surface areas, as necessary to prevent the release of fugitive dust, whether or not the person is required by 20.11.20 NMAC to obtain a fugitive dust control permit. It shall be a violation of 20.11.20 NMAC to allow fugitive dust, track out, or transported material from any active operation, open storage pile, stockpile, paved or unpaved roadway, disturbed surface area, or inactive disturbed surface area to cross or be carried beyond the property line, right-of-way, easement or any other area under control of the person generating or allowing the fugitive dust if the fugitive dust may: (1) with reasonable probability injure human health or animal or plant life; (2) unreasonably interfere with the public welfare, visibility or the reasonable use of property; or (3) be visible for a total of 15 minutes or more during any consecutive one hour observation period using the visible fugitive dust detection method in 20.11.20.26 NMAC or an equivalent method approved in writing by the department. Failure to comply with 20.11.20.12 NMAC, a fugitive dust control permit, plan, term or condition shall be a violation of 20.11.20 NMAC." *NOTE: If any ground disturbance other than what is identified in the initial project is to occur, then you MUST re-coordinate with the Air Quality Program personnel prior to commencing work.*
AQ 4	**Boilers:** Natural gas boilers/hot water heaters of size greater than five (5) million BTU (MMBTU) require Stationary Source Air Permitting. If planning to install a boiler fueled by anything other than natural gas, contact Air Quality Program personnel immediately to determine if a permit is needed. If an air permit is required, the permit must be issued prior to purchase of the boiler(s) and can take up to seven (7) months to accomplish. The Air Quality Program is required to track boilers of all sizes/fuel types to comply with the basewide air permit (Title V Operating Permit). ***Coordination/Consultation with Air Quality Program POC required.***
AQ 5	**Refrigerant:** Ensure all equipment containing refrigerant and all HVAC technicians comply with the requirements in 40 CFR Part 82. If you hire an outside contractor, other than Chenega, you must: 1) maintain all invoices and work orders for work on refrigeration equipment for a minimum of 3 years; and 2) maintain an inventory of refrigeration equipment to include: make, model, serial number, refrigerant type, and total refrigerant charge in pounds.
AQ 6	**Generators:** All emergency generators are required to have a 20.11.41 NMAC construction permit from the Albuquerque Environmental Health Department (AEHD) Air Quality Division (AQD). The permit must be in place prior to "commencing construction", which means prior to purchasing the unit (20.11.41.7.C NMAC). It may take as long as 7 months from the initiation of the permit application preparation process to receive a permit from the AEHD AQD. The project is expected to pay for the cost of preparing the permit application and the associated AEHD AQD permit fees. The organization must plan to pay annual emission fee assessed by the AEHD AQD. Contact Air Quality Program personnel to discuss the timeline for the project. AFCEC approval of generator sizing and design is required prior to permitting. ***Coordination/Consultation with Air Quality Program POC required.***
AQ 7	**Building Renovation/Demolition:** If the building to be renovated/demolished is more than 75,000 cubic feet of space then a Fugitive Dust Permit will be required prior to renovation/demolition (***refer to AQ3 – first bulleted item***). An asbestos notification form must be submitted for all building renovation/demolition activities, even if no regulated ACM is present in the building or structure (***refer to AQ1***).
AQ 8	**Air Quality Permitting for New Sources:** An air quality permit from the AEHD AQD may be required for the proposed equipment prior to construction. ***Coordination with the Air Quality POC is required*** to ensure the appropriate measures are taken in the event the source must obtain an air quality permit. It may take as long as 7 months from the initiation of the permit application preparation process to receive a permit from AEHD AQD. The project is expected to pay for the cost of preparing the permit application and the associated AEHD air quality permit fees. The organization must also plan to pay emission fees for the permitted source on an annual basis.
AQ 9	**Permitting and/or Reporting Requirements Exist for Activity:** Activities require Open Burn/Open Detonation permitting through the City of Albuquerque **OR** there is requirement to report munition items expended during event. ***Prior Coordination with the Air Quality POC is required.***

effective: 25 April 2016
by Martha E. Garcia

	Hazardous Waste Program – POCs: Ms. Rebecca Clines and Ms. Katrina Wheelock @ 846-0003 or via e-mail: kirtlandhazwaste@us.af.mil
HW 1	**Contracted Construction Projects:** All wastes generated must be characterized by the contractor. Any wastes characterized as Universal (lamps, batteries, etc.) or Hazardous must be properly disposed of by the contractor in accordance with (IAW) all federal and state regulations. Transformers, capacitors, and ballasts being removed/replaced must also be characterized and disposed of by the contractor IAW all federal, state, and local regulations. ***Ensure Scope of Work (SOW) and contract funding accurately account for these requirements.***
HW 2	**Self-Help / In-House Projects:** Any Universal (lamps, batteries, etc.) or Hazardous wastes generated must be properly characterized and disposed of IAW all federal and state regulations. Transformers, capacitors, and ballasts being removed/replaced must be characterized and disposed of in accordance with (IAW) all federal, state, and local regulations. Characterization may require fluid sampling. ***Contact the Hazardous Waste program prior to project start for guidance.*** Once project is complete, ***contact Hazardous Waste POCs for proper management of unused/unwanted materials (paints, sealants, etc.).***
HW 3	**TDYs:** Kirtland AFB manages the following items as hazardous waste: used oil, oily rags, rags contaminated with solvent, batteries, paint, sealants, etc. These items must be disposed of IAW federal, state, and local regulations. ***Contact 377 MSG/CEIE Hazardous Waste Program POCs 4 weeks prior to your TDY.***
HW 4	**New/Updated Mission Requirements:** Proposed new/updated activities may introduce or alter a waste stream. ***Contact the Hazardous Waste program to ensure wastes are properly characterized.***
	Hazardous Materials Program – POC: Program Manager: Ms. Lori Crump @ 846-8781 Program Support: Mr. Rickey Spence @ 846-2509 or via e-mail: 377msg@us.af.mil
HM 1	Any hazardous materials used in the proposed project needs to be identified either by authorizing the material(s) under a shop in EESOH-MIS or by filling out, submitting, and following the guidelines in the short term contractor Memo and worksheet. Please turn in the worksheet, inventory list, and manufacture specific SDS(s) to the 377th MSG/CEIEC Hazardous Material program office or email to 377 MSG/CEIEC Hazardous Materials mail box. ***Please contact Hazardous Materials POCs for Memo and worksheet.***
HM 2	Any hazardous materials used in the proposed deployment need to be identified by filling out, submitting, and following guidelines in the deployment memo and worksheet. Please turn in the worksheet, inventory list, and manufacturer specific SDS(s) to the 377 MSG/CEIEC Hazardous Material program office or email to the 377 MSG/CEIEC Hazardous Materials mail box. ***Please contact Hazardous Materials POCs for Memo and worksheet.***
	Solid Waste/Recycling – POC: Program Manager: Ms. Katrina Wheelock @ 853-2486
SW 1	**Reporting:** Document weight/volume of all waste disposed, recycled, or salvaged off-base. Submit documentation to 377msg.ceanc.12@us.af.mil. ***Contact the Solid Waste/Recycling Program Manager for guidance.***
SW 2	**Furniture/Equipment Disposal:** ***Coordinate with DRMO (853-2269 or 846-6396)*** to establish whether furniture/equipment needs to be turned in. ***Contact your Unit Equipment Manager*** to remove equipment from supply/asset inventories prior to turning in or disposing. If disposal is authorized by DRMO and a roll-off is required, submit request on an AF Form 332.
SW 3	**Minor Construction/Demolition:** If using Kirtland AFB C&D Landfill for disposal, segregate scrap metal and corrugated cardboard for recycling at the landfill's recycling area. If a dumpster/roll-off is needed for recycling larger amounts of scrap metal or cardboard, submit request on an AF Form 332.
SW 4	**Major Construction/Demolition:** Ensure that Section 01 74 19 (Construction Waste Management, updated 06/2012) is included in project specifications.
SW 5	**Explosive Testing Debris:** Ensure test bed is cleared of any debris before next test. Only debris of a non-hazardous nature may be disposed of in the Kirtland AFB C&D Landfill. ***Proponent must maintain documentation that waste is non-hazardous, and provide to the Solid Waste/Recycling Program Manager upon request.***
	Restoration Program – POC: Chief of Env. Restoration: Mr. Wayne Bitner @ 853-3484
R1	Due to the potential for encountering Unexploded Ordnance (UXO), any fieldwork south of Hardin Blvd requires workers to complete UXO Awareness training. ***The 377 MSG/CED EOD Group can provide this short training. They can be contacted at 846-2229.***
R2	Impacts to Environmental Restoration Sites are possible. ***Please contact Restoration Program POC before doing any work.***
	Water Quality Program – POC's: Ms. Andria Cuevas @ 846-2522 and Ms. Rebecca Clines @ 846-2306
WQ 1	**Wastewater – Septic Tanks/Leach Fields:** When feasible, new construction and remodels should connect to the sanitary sewer system. If a new septic system is the only viable option, the septic tank and leach field must meet the requirements of the NMED Liquid Waste Bureau and be registered with the state. Consult the NMED Liquid Waste requirements concerning removal and/or demolition of a septic tank (20.6.2 NMAC, http://www.nmcpr.state.nm.us/nmac/_titles.htm). ***Coordination/Consultation with Water Quality Program POCs required.***
WQ 2	**Water Discharge Activities - Municipal Separate Storm Sewer System (MS4) applies:** The MS4 permit requires all activities, regardless of size, to implement best management practices (BMPs) to ensure that storm water pollutants are contained to the maximum extent practical and do not enter the storm drainage system (http://water.epa.gov/polwaste/npdes/swbmp). Examples of activities include: power washing of surfaces, minor construction, laydown yards, or any activities draining to a storm drain, etc. Additionally, all non-storm water discharges must be approved by the Water Quality Program **prior to discharge**; all other non-storm water discharges are **prohibited**. ***Coordination/Consultation with Water Quality Program POCs required.*** *NOTE: If any ground disturbance other than what is identified in the initial project is to occur, then you MUST re-coordinate with the Water Quality Program personnel prior to commencing work.*

effective: 25 April 2016
by Martha E. Garcia

	Water Quality Program – POC's: Ms. Andria Cuevas @ 846-2522 and Ms. Rebecca Clines @ 846-2306
WQ 3	**Land Disturbance Equal to or Greater than 43,560sqft (1 acre) – Construction General Permit (CGP) applies:** CGP applies to any individual project or series of projects/common development plans that cumulatively disturb one (1) acre. Contractors **must** develop a Storm Water Pollution Prevention Plan (SWP3), a draft Notice of Intent (NOI), and a detailed site map for approval by the Water Quality Program at least four (4) weeks prior to the contractor's submission of the approved NOI to the Environmental Protection Agency (EPA). Contractors **must** submit NOIs at least fourteen (14) calendar days prior to commencing ground disturbance (**Note**: 6 weeks total required). Ground disturbance **cannot** begin for fourteen (14) calendar days after EPA acknowledges receipt of the NOI (http://cfpub.epa.gov/npdes/stormwater/cgpenoi.cfm), or unless EPA delays or denies authorization. BMPs complying with the permit conditions **must** be in place before any ground disturbance commences. *Upon project completion,* Contractor **must** achieve final stabilization, in accordance with Part 2.2.2 and Part 9.4.1 of the CGP, prior to submitting a Notice of Termination (NOT) to the EPA and NMED. Contractor **must** comply with the NMED Surface Water Quality conditions specified in Part 9.4 of the CGP (20.6.4 NMAC, http://www.nmcpr.state.nm.us/nmac/_titles.htm). ***Coordination/Consultation with Water Quality Program POCs required.***
WQ 4	**Facilities/Renovations with New Footprints Greater Than 5,000 gross sq ft - EISA, Section 438 applies:** The project footprint consists of all horizontal hard surfaces and disturbed areas, including both building area and pavements. The Energy Independence Security Act (EISA) requirements do not apply to internal renovations, maintenance, or resurfacing of existing pavements. Projects **must** conform to Air Force Sustainable Design and Development (SDD) guidance dated 2 June 2011 and the Unified Facilities Criteria (UFC-2-210-10). **Note: use of retention ponds is strictly prohibited**. Contractor **must** populate and validate the approved EISA spreadsheet prior to land disturbance. EISA estimated cost, written as a separate line-item of estimated cost, and final implementation cost **must** be documented in the DD 1391. ***Coordination with Water Quality Program POCs required.***
WQ 5	**Wastewater – Oil Water Separators, Grease and Sand Traps:** Equipment should only be installed at locations with an identified need and no feasible alternative. Design features and processes should be substantially reviewed prior to installation of equipment (include in DD 1391 if required). ***Coordination/Consultation with Water Quality Program POCs required.***
WQ 6	**Wastewater – Port-a-Potties:** For all projects/events, the contractor must anchor port-a-potties to prevent toppling of the unit. All projects and events that will utilize gray (hand wash station) and black water (port-a-potties) systems must ensure that the contents are disposed of in accordance with local, state and federal laws. ***Coordination/Consultation with Water Quality Program POCs required.***
WQ 7	**Wastewater – Fire Suppression System Discharge:** Discharges from fire suppression systems utilizing chemical suppressants must be contained at the facility. Discharges of chemical suppressants to the environment or the sanitary sewer system are **prohibited**. ***Coordination with Water Quality POCs required.***
WQ 8	**Section 404 Permit:** Any activities in or near the Tijeras or Coyote Arroyos may require a Section 404 Permit. ***Consultation with Water Quality POCs required.***
	Tank Program – POC: Mr. Dustin Akins @846-0226
T1	**Transformers:** ***Please forward*** the make, model, transformer ID, location/building, and oil capacity (in gallons) for each new/replacement transformer being installed ***to Tank Program POC***.
T2	**Tanks – Above Ground Tanks (ASTs), Underground Tanks (USTs) and Generators:** ***Please forward*** the make, model, ID number, location/building, and storage capacity (in gallons) for all new and/or replacement oil storage tanks (including POLs, grease, fuels and generators) over 55 gals to ***Tank Program POC.*** All units over 55 gals must have secondary containment in case of spills/leaks. All USTs and tanks over 1,320 gals must be registered with the state.
	Natural Resources Program – POC: Ms. Erin Riley @ 846-0226
NR 1	**Demolition of Buildings/Structures**: ***Contact Natural Resource POC*** to schedule a survey for bats, snakes, and nesting birds prior to demolition.
NR 2	**Removal/Trimming of Tree(s)**: ***Contact Natural Resource POC*** to schedule a survey for bird nests prior to removal/trimming tree(s).
NR 3	**Outdoor Activities (Including Exterior Building/Structure Renovations)**: ***Contact Natural Resource POC*** to schedule a survey for bird nests/animal issues prior to beginning work.
NR 4	**Replacement of Existing or Installation of New Power Poles:** Poles may need to be retrofitted to prevent bird electrocution. ***Contact Natural Resource Program POC*** to have the poles evaluated.
NR 5	**Trenching:** Potential exists for reptiles/amphibians/small mammals dropping into trenching projects and becoming trapped. Trenches require ramps at no more than 45 degrees so that trapped animals may exit the trench. ***Contact Natural Resource POC*** with questions.
	Cultural Resources Program – POC: Ms. Erin Riley @ 846-0226
CR 1	Building/Structure is Historic; proposed work may indirectly impact historic properties (Area of Potential Effect). ***Please contact Cultural Resource POC before doing any work.***
CR 2	Impacts to Cultural Sites are possible. ***Please contact Cultural Resource POC before doing any work.***
CR 3	**Inadvertent Discovery of Buried Cultural Resources or Native American Human Remains and Objects:** If cultural resources are encountered inadvertently during an undertaking, work in the immediate vicinity shall be halted, the immediate vicinity of the resources shall be secured, and the Cultural Resource Program POC, shall be notified. The following procedures shall be followed: • An in situ evaluation of the resources shall be made by a qualified archaeologist. Based on recommendations from the archaeologist, decisions regarding the treatment of the resources shall be made in consultation with the Cultural Resources Manager (CRM) and the State Historic Preservation Officer (SHPO). • If the resources cannot be evaluated without further archaeological or historic work, the CRM shall be notified and a data recovery program or historic research shall be prepared in consultation with the SHPO. • Based on the results of the data recovery program or historic research, the resources shall be evaluated for eligibility to the National Register in consultation with the CRM and the New Mexico SHPO.

effective: 25 April 2016
by Martha E. Garcia

	MISCELLANEOUS
M1	**Ground Disturbance:** AF Form 103 required.
M2	**Project Requires Siting:** Contact Base Siting Office at 853-3747.
M3	**Tree Removal:** Personal use is not allowed. Please remove stumps and ensure trunks are no longer than 5 feet and/or 30 inches in diameter, if being taken to the Kirtland AFB Landfill for mulching. ***Coordination with Landfill Personnel required – Please call 846-5994 for further guidance.***
M4	**Disposal of Construction &Demolition (C&D) Waste at Kirtland C&D Landfill**: In order to gain access to the site, contractors must obtain a KAFB C&D Landfill Pass specific to each contract held for work on KAFB (multiple contracts = multiple passes). Note that a landfill pass establishes eligibility to use the facility; it does not guarantee disposal. Passes are issued Monday – Friday, 0730-1200. ***To obtain a Pass, contractors must bring all of the following items to the Landfill office:*** a) copy of the valid contract issued by a U.S. Government Contracting Agency for work to be accomplished on KAFB that requires use of the KAFB C&D Landfill; b) original, current vehicle registration(s); c) valid proof of insurance; and d) subcontractor appointment letter or contract (if applicable), showing subcontractor's performance period. Contractor's signature to obtain a Pass indicates that contractor will control the waste stream such that only C&D generated on KAFB is disposed at the C&D Landfill (no municipal solid waste, no hazardous waste, no special waste, no off-base waste, etc.), and that contractor assumes full responsibility for proper disposal of any waste that may be rejected at the gate.
M5	**Activities on DOE Permitted Property:** DOE is responsible for adhering to all environmental laws and obtaining all applicable permits prior to commencing work. This includes conducting biological and cultural surveys as applicable. ***Please contact the DOE Environmental Office for further guidance.***
M6	**Environmental Management System (EMS) Awareness:** Kirtland AFB has a conforming EMS. All personnel, to include contractors, need to be aware of the Environmental Commitment Statement found on the Kirtland AFB public website - http://www.kirtland.af.mil/shared/media/document/AFD-140123-056.pdf. Contract work shall be consistent with the relevant policy and objectives identified in the Kirtland AFB EMS applicable to the contract. The Contractor shall ensure that employees are aware of environmental impacts and will mitigate those impacts by practicing pollution prevention techniques. ***Please contact the Kirtland AFB EMS Program Manager, Ms. Lori Crump @ 846-8781, with any questions.***
M7	**Spectrum Management Office (SMO):** All organizations on Kirtland AFB (includes incoming or TDY units and construction companies) that have radios (including walkie talkies), radars, sounders or a device that transmits radio frequencies must have a radio frequency license issued from the National Telecommunications and Information Administration (NTIA) or the Federal Communications Commission (FCC) prior to operation on the Installation. ***Organizations should contact the SMO to ensure that their devices are properly licensed prior to use, or, to request radio frequency assistance from the Installation Spectrum Managers. The SMO can be reached at (505) 853-3769/7426 or via email at 377ABW.SMO@us.af.mil.***
M8	DD1354 is required to capitalize improvements. ***Please submit document upon completion of project to the Real Property Office.***

Note: Listed requirements are subject to change for compliance with statutory/regulatory changes.

Bio

377 MSG/CEC Digging Permits Mail

From: HAGARTY, PAUL J GS-12 USAF AFGSC 377 AMDS/SGPC
Sent: Monday, July 25, 2016 8:49 AM
To: 377 MSG/CEC Digging Permits Mail
Cc: ADDY, MICHAEL D Capt USAF AFGSC 377 AMDS/SGPB; GROSEK, ADAM M TSgt USAF AFGSC 377 AMDS/SGPB
Subject: RE: Dig Permits 1607-013 & 1607-014 ***VIEW IN HTML***
Signed By: paul.hagarty.1@us.af.mil

SGPB Concurs. Both 1607-013 & 014 are in areas that contain drinking water lines. Under no circumstance are workers to tap into, damage or alter these line (unless specified in the Dig Permit). All worker must be conducted IAW current AWWA standards and any issues must be reported immediately to Bio, the CE Water Plant and CE Distribution Shop.

Paul J. Hagarty

Environmental Protection Specialist

377 AMDS/SGPB

1850 Maxwell Blvd, Bldg 589

Kirtland AFB, NM 87117-5522

COMM: 505-846-4259

paul.hagarty.1@us.af.mil

From: 377 MSG/CEC Digging Permits Mail
Sent: Monday, July 25, 2016 8:38 AM
To: 377 ABW/SEG Administrative Mailbox <ABWSEG@us.af.mil>; 377 ABW/SEW Administrative Mailbox <377ABWSEW@us.af.mil>; 377 MSG/CED Administrative Mailbox <377MSG.CED@us.af.mil>; BAIRD, DOUG M WG-10 USAF AFGSC 377 MSG/CEOIE <doug.baird@us.af.mil>; BARE, MICHELLE P CTR USAF AFGSC 377 MSG/CEIE <michelle.bare.ctr@us.af.mil>; BARNES, ANTOINE J CTR USAF AFGSC 377 MSG/CEOIP <antoine.barnes.ctr@us.af.mil>; BAROS, RICHARD A JR CTR USAF AFGSC 377 MSG/CEMQ <richard.baros.ctr@us.af.mil>; CARMONA, GERARDO GS-11 USAF AFGSC 377 MSG/SCXP <gerardo.carmona@us.af.mil>; CASHWELL, GRADY K CTR USAF AFGSC 377 MSG/CEMQ <grady.cashwell.ctr@us.af.mil>; CLARKE, JASON P SrA USAF AFGSC 377 AMDS/SGPB <jason.clarke.5@us.af.mil>; CREEK, BEN J WS-10 USAF AFGSC 377 MSG/CEOID <ben.creek@us.af.mil>; DALZELL, MARK A WS-09 USAF AFGSC 377 MSG/CEOIW <mark.dalzell@us.af.mil>; DEBLASSIE, RON S CTR USAF AFGSC 377 MSG/CEMAC <ron.deblassie.ctr@us.af.mil>; EDWARDS, FRANKIE C WG-10 USAF AFGSC 377 MSG/CEOIE <frankie.edwards@us.af.mil>; ELLIS, MICHAEL E CTR USAF

AFGSC 377 MSG/SCMO <michael.ellis.17.ctr@us.af.mil>; GARCIA, MARTHA E CIV USAF AFGSC 377 MSG/CEIE <martha.garcia.3@us.af.mil>; GOMEZ, KENNY H CTR USAF AFGSC 377 MSG/CEOHE <kenny.gomez.ctr@us.af.mil>; GROSEK, ADAM M TSgt USAF AFGSC 377 AMDS/SGPB <adam.grosek@us.af.mil>; HAGARTY, PAUL J GS-12 USAF AFGSC 377 AMDS/SGPC <paul.hagarty.1@us.af.mil>; HANECKOW, VALERIE R GS-11 USAF AFGSC 377 SFS/S5C <valerie.haneckow.2@us.af.mil>; JOHNSON, ARTHUR R CTR USAF AFGSC 377 MSG/CEOHP <arthur.johnson.3.ctr@us.af.mil>; LAYMAN, JONATHON K GS-11 USAF AFGSC 377 ABW/SEG <jonathon.layman@us.af.mil>; LUNA, JUSTIN L CTR USAF AFGSC 377 MSG/CEOFP <justin.luna.ctr@us.af.mil>; MENDOZA, DAVID P CTR USAF AFGSC 377 MSG/SCMO <david.mendoza.8.ctr@us.af.mil>; MENDOZA, PAUL P CTR USAF AFGSC 377 MSG/CEOFA <paul.mendoza.ctr@us.af.mil>; MILLER, JOHN A SSgt USAF AFGSC 377 AMDS/SGPB <john.miller.61@us.af.mil>; PEREZ, ARTURO CTR USAF AFGSC 377 MSG/CEMAC <arturo.perez.3.ctr@us.af.mil>; PETERSON, RICHARD W GS-11 USAF AFGSC 377 ABW/SEG <richard.peterson.3@us.af.mil>; RIDLEY, RUSSELL D CTR USAF AFGSC 377 MSG/SCMO <russell.ridley.ctr@us.af.mil>; ROEBUCK, EDDIE V WG-10 USAF AFGSC 377 MSG/CEOID <eddie.roebuck@us.af.mil>; ROMERO, DANIEL WG-10 USAF AFGSC 377 MSG/CEOID <daniel.romero@us.af.mil>; SALAS, JUAN E GS-11 USAF AFGSC 377 MSG/CEF <juan.salas.2@us.af.mil>; SANTIAGO, JOSE A GS-08 USAF AFGSC 377 MSG/CEFT <jose.santiago.2@us.af.mil>; SHEETS, TED L GS-09 USAF AFGSC 377 MSG/CEOE <ted.sheets.1@us.af.mil>; SIPE, CHRISTOPHER W GS-13 USAF AFGSC 377 MSG/CEO <christopher.sipe.2@us.af.mil>; SMITH, CHRISTY L CTR USAF AFGSC 377 MSG/CENMP <christy.smith.2.ctr@us.af.mil>; STONE, KRISTA L GS-08 USAF AFGSC 377 MSG/CEFT <krista.stone@us.af.mil>; THOMPSON, PHILIP L GS-13 USAF AFGSC 377 ABW/SEW <philip.thompson.8@us.af.mil>; VARELA, JAYSON W WG-09 USAF AFGSC 377 MSG/CEOIW <jayson.varela.1@us.af.mil>; WALKER, BLAKE T WG-09 USAF AFGSC 377 MSG/CEOIUD <blake.walker.3@us.af.mil>; WATERS, MONTE R GS-09 USAF AFGSC 377 SFS/S5C <monte.waters.1@us.af.mil>; CARABAJAL, ISAAC L JR GS-11 USAF AFGSC 377 MSG/CENE <isaac.carabajal@us.af.mil>; HAILEY, JUSTIN G GS-11 USAF AFGSC 377 MSG/CENE <justin.hailey.2@us.af.mil>; KRAEMER, DOUGLAS M GS-11 USAF AFGSC 377 MSG/CENE <douglas.kraemer@us.af.mil>; OLIVER, MICHAEL F GS-12 USAF AFGSC 377 MSG/CENE <michael.oliver.27@us.af.mil>; ADKISSON, NICKOLAS B SSgt USAF AFGSC 377 MSG/246-2229 <nickolas.adkisson@us.af.mil>; GLOWNIA, JUSTIN D SrA USAF AFGSC 377 MSG/CED <justin.glownia@us.af.mil>; SEEKS, ZACHARY R SrA USAF AFGSC 377 MISSION SUPPORT GP/CED <zachary.seeks@us.af.mil>
Subject: Dig Permits 1607-013 & 1607-014 ***VIEW IN HTML***

Good morning all,

Please review and coordinate the following permits:

1607-013 <file:///\\kafbdfs00cd\kirtlandDFS\377MSG\CE_ORG_DATA\CE\Dig%20Permit%20File\1607-013.pdf> B638 - Repair water valve

1607-014 <file:///\\kafbdfs00cd\kirtlandDFS\377MSG\CE_ORG_DATA\CE\Dig%20Permit%20File\1607-014.pdf> E of Bulk Fuels - Insert test wells

377 MSG/CEC Digging Permits Mail

From: GLOWNIA, JUSTIN D SrA USAF AFGSC 377 MSG/CED
Sent: Wednesday, August 03, 2016 2:33 PM
To: 377 MSG/CEC Digging Permits Mail
Subject: RE: Dig Permits 1607-013 & 1607-014 ***VIEW IN HTML***
Signed By: justin.glownia@us.af.mil

EOD has no concerns.

Thank you,

V/r

JUSTIN D GLOWNIA, SRA, USAF

EOD Operations

Kirtland AFB, NM

Comm: 505-846-2229

From: 377 MSG/CEC Digging Permits Mail
Sent: Monday, July 25, 2016 8:38 AM
To: 377 ABW/SEG Administrative Mailbox <ABWSEG@us.af.mil>; 377 ABW/SEW Administrative Mailbox <377ABWSEW@us.af.mil>; 377 MSG/CED Administrative Mailbox <377MSG.CED@us.af.mil>; BAIRD, DOUG M WG-10 USAF AFGSC 377 MSG/CEOIE <doug.baird@us.af.mil>; BARE, MICHELLE P CTR USAF AFGSC 377 MSG/CEIE <michelle.bare.ctr@us.af.mil>; BARNES, ANTOINE J CTR USAF AFGSC 377 MSG/CEOIP <antoine.barnes.ctr@us.af.mil>; BAROS, RICHARD A JR CTR USAF AFGSC 377 MSG/CEMQ <richard.baros.ctr@us.af.mil>; CARMONA, GERARDO GS-11 USAF AFGSC 377 MSG/SCXP <gerardo.carmona@us.af.mil>; CASHWELL, GRADY K CTR USAF AFGSC 377 MSG/CEMQ <grady.cashwell.ctr@us.af.mil>; CLARKE, JASON P SrA USAF AFGSC 377 AMDS/SGPB <jason.clarke.5@us.af.mil>; CREEK, BEN J WS-10 USAF AFGSC 377 MSG/CEOID <ben.creek@us.af.mil>; DALZELL, MARK A WS-09 USAF AFGSC 377 MSG/CEOIW <mark.dalzell@us.af.mil>; DEBLASSIE, RON S CTR USAF AFGSC 377 MSG/CEMAC <ron.deblassie.ctr@us.af.mil>; EDWARDS, FRANKIE C

WG-10 USAF AFGSC 377 MSG/CEOIE <frankie.edwards@us.af.mil>; ELLIS, MICHAEL E CTR USAF AFGSC 377 MSG/SCMO <michael.ellis.17.ctr@us.af.mil>; GARCIA, MARTHA E CIV USAF AFGSC 377 MSG/CEIE <martha.garcia.3@us.af.mil>; GOMEZ, KENNY H CTR USAF AFGSC 377 MSG/CEOHE <kenny.gomez.ctr@us.af.mil>; GROSEK, ADAM M TSgt USAF AFGSC 377 AMDS/SGPB <adam.grosek@us.af.mil>; HAGARTY, PAUL J GS-12 USAF AFGSC 377 AMDS/SGPC <paul.hagarty.1@us.af.mil>; HANECKOW, VALERIE R GS-11 USAF AFGSC 377 SFS/S5C <valerie.haneckow.2@us.af.mil>; JOHNSON, ARTHUR R CTR USAF AFGSC 377 MSG/CEOHP <arthur.johnson.3.ctr@us.af.mil>; LAYMAN, JONATHON K GS-11 USAF AFGSC 377 ABW/SEG <jonathon.layman@us.af.mil>; LUNA, JUSTIN L CTR USAF AFGSC 377 MSG/CEOFP <justin.luna.ctr@us.af.mil>; MENDOZA, DAVID P CTR USAF AFGSC 377 MSG/SCMO <david.mendoza.8.ctr@us.af.mil>; MENDOZA, PAUL P CTR USAF AFGSC 377 MSG/CEOFA <paul.mendoza.ctr@us.af.mil>; MILLER, JOHN A SSgt USAF AFGSC 377 AMDS/SGPB <john.miller.61@us.af.mil>; PEREZ, ARTURO CTR USAF AFGSC 377 MSG/CEMAC <arturo.perez.3.ctr@us.af.mil>; PETERSON, RICHARD W GS-11 USAF AFGSC 377 ABW/SEG <richard.peterson.3@us.af.mil>; RIDLEY, RUSSELL D CTR USAF AFGSC 377 MSG/SCMO <russell.ridley.ctr@us.af.mil>; ROEBUCK, EDDIE V WG-10 USAF AFGSC 377 MSG/CEOID <eddie.roebuck@us.af.mil>; ROMERO, DANIEL WG-10 USAF AFGSC 377 MSG/CEOID <daniel.romero@us.af.mil>; SALAS, JUAN E GS-11 USAF AFGSC 377 MSG/CEF <juan.salas.2@us.af.mil>; SANTIAGO, JOSE A GS-08 USAF AFGSC 377 MSG/CEFT <jose.santiago.2@us.af.mil>; SHEETS, TED L GS-09 USAF AFGSC 377 MSG/CEOE <ted.sheets.1@us.af.mil>; SIPE, CHRISTOPHER W GS-13 USAF AFGSC 377 MSG/CEO <christopher.sipe.2@us.af.mil>; SMITH, CHRISTY L CTR USAF AFGSC 377 MSG/CENMP <christy.smith.2.ctr@us.af.mil>; STONE, KRISTA L GS-08 USAF AFGSC 377 MSG/CEFT <krista.stone@us.af.mil>; THOMPSON, PHILIP L GS-13 USAF AFGSC 377 ABW/SEW <philip.thompson.8@us.af.mil>; VARELA, JAYSON W WG-09 USAF AFGSC 377 MSG/CEOIW <jayson.varela.1@us.af.mil>; WALKER, BLAKE T WG-09 USAF AFGSC 377 MSG/CEOIUD <blake.walker.3@us.af.mil>; WATERS, MONTE R GS-09 USAF AFGSC 377 SFS/S5C <monte.waters.1@us.af.mil>; CARABAJAL, ISAAC L JR GS-11 USAF AFGSC 377 MSG/CENE <isaac.carabajal@us.af.mil>; HAILEY, JUSTIN G GS-11 USAF AFGSC 377 MSG/CENE <justin.hailey.2@us.af.mil>; KRAEMER, DOUGLAS M GS-11 USAF AFGSC 377 MSG/CENE <douglas.kraemer@us.af.mil>; OLIVER, MICHAEL F GS-12 USAF AFGSC 377 MSG/CENE <michael.oliver.27@us.af.mil>; ADKISSON, NICKOLAS B SSgt USAF AFGSC 377 MSG/246-2229 <nickolas.adkisson@us.af.mil>; GLOWNIA, JUSTIN D SrA USAF AFGSC 377 MSG/CED <justin.glownia@us.af.mil>; SEEKS, ZACHARY R SrA USAF AFGSC 377 MISSION SUPPORT GP/CED <zachary.seeks@us.af.mil>
Subject: Dig Permits 1607-013 & 1607-014 ***VIEW IN HTML***

Good morning all,

Please review and coordinate the following permits:

1607-013 <file:///\\kafbdfs00cd\kirtlandDFS\377MSG\CE_ORG_DATA\CE\Dig%20Permit%20File\1607-013.pdf> B638 - Repair water valve

1607-014 <file:///\\kafbdfs00cd\kirtlandDFS\377MSG\CE_ORG_DATA\CE\Dig%20Permit%20File\1607-014.pdf> E of Bulk Fuels - Insert test wells

377 MSG/CEC Digging Permits Mail

From: RIDLEY, RUSSELL D CTR USAF AFGSC 377 MSG/SCMO
Sent: Tuesday, July 26, 2016 10:26 AM
To: 377 MSG/CEC Digging Permits Mail
Subject: RE: Dig Permits 1607-013 & 1607-014 ***VIEW IN HTML***
Signed By: russell.ridley.ctr@us.af.mil

Permit 1607-013 is clear

1607-014 is clear. Russell Ridley Mike Ellis 377Cs

From: 377 MSG/CEC Digging Permits Mail
Sent: Monday, July 25, 2016 8:38 AM
To: 377 ABW/SEG Administrative Mailbox <ABWSEG@us.af.mil>; 377 ABW/SEW Administrative Mailbox <377ABWSEW@us.af.mil>; 377 MSG/CED Administrative Mailbox <377MSG.CED@us.af.mil>; BAIRD, DOUG M WG-10 USAF AFGSC 377 MSG/CEOIE <doug.baird@us.af.mil>; BARE, MICHELLE P CTR USAF AFGSC 377 MSG/CEIE <michelle.bare.ctr@us.af.mil>; BARNES, ANTOINE J CTR USAF AFGSC 377 MSG/CEOIP <antoine.barnes.ctr@us.af.mil>; BAROS, RICHARD A JR CTR USAF AFGSC 377 MSG/CEMQ <richard.baros.ctr@us.af.mil>; CARMONA, GERARDO GS-11 USAF AFGSC 377 MSG/SCXP <gerardo.carmona@us.af.mil>; CASHWELL, GRADY K CTR USAF AFGSC 377 MSG/CEMQ <grady.cashwell.ctr@us.af.mil>; CLARKE, JASON P SrA USAF AFGSC 377 AMDS/SGPB <jason.clarke.5@us.af.mil>; CREEK, BEN J WS-10 USAF AFGSC 377 MSG/CEOID <ben.creek@us.af.mil>; DALZELL, MARK A WS-09 USAF AFGSC 377 MSG/CEOIW <mark.dalzell@us.af.mil>; DEBLASSIE, RON S CTR USAF AFGSC 377 MSG/CEMAC <ron.deblassie.ctr@us.af.mil>; EDWARDS, FRANKIE C WG-10 USAF AFGSC 377 MSG/CEOIE <frankie.edwards@us.af.mil>; ELLIS, MICHAEL E CTR USAF AFGSC 377 MSG/SCMO <michael.ellis.17.ctr@us.af.mil>; GARCIA, MARTHA E CIV USAF AFGSC 377 MSG/CEIE <martha.garcia.3@us.af.mil>; GOMEZ, KENNY H CTR USAF AFGSC 377 MSG/CEOHE <kenny.gomez.ctr@us.af.mil>; GROSEK, ADAM M TSgt USAF AFGSC 377 AMDS/SGPB <adam.grosek@us.af.mil>; HAGARTY, PAUL J GS-12 USAF AFGSC 377 AMDS/SGPC <paul.hagarty.1@us.af.mil>; HANECKOW, VALERIE R GS-11 USAF AFGSC 377 SFS/S5C <valerie.haneckow.2@us.af.mil>; JOHNSON, ARTHUR R CTR USAF AFGSC 377 MSG/CEOHP <arthur.johnson.3.ctr@us.af.mil>; LAYMAN, JONATHON K GS-11 USAF AFGSC 377 ABW/SEG <jonathon.layman@us.af.mil>; LUNA, JUSTIN L CTR USAF AFGSC 377 MSG/CEOFP <justin.luna.ctr@us.af.mil>; MENDOZA, DAVID P CTR USAF AFGSC 377 MSG/SCMO <david.mendoza.8.ctr@us.af.mil>; MENDOZA, PAUL P CTR USAF AFGSC 377 MSG/CEOFA <paul.mendoza.ctr@us.af.mil>; MILLER, JOHN A SSgt USAF AFGSC 377 AMDS/SGPB <john.miller.61@us.af.mil>; PEREZ, ARTURO CTR USAF AFGSC 377 MSG/CEMAC <arturo.perez.3.ctr@us.af.mil>; PETERSON, RICHARD W GS-11 USAF AFGSC 377 ABW/SEG <richard.peterson.3@us.af.mil>; RIDLEY, RUSSELL D CTR USAF AFGSC 377 MSG/SCMO <russell.ridley.ctr@us.af.mil>; ROEBUCK, EDDIE V WG-10 USAF AFGSC 377 MSG/CEOID <eddie.roebuck@us.af.mil>; ROMERO, DANIEL WG-10 USAF AFGSC 377 MSG/CEOID <daniel.romero@us.af.mil>; SALAS, JUAN E GS-11 USAF AFGSC 377 MSG/CEF <juan.salas.2@us.af.mil>; SANTIAGO, JOSE A GS-08 USAF AFGSC 377 MSG/CEFT <jose.santiago.2@us.af.mil>; SHEETS, TED L GS-09 USAF AFGSC 377 MSG/CEOE <ted.sheets.1@us.af.mil>; SIPE, CHRISTOPHER W GS-13 USAF

AFGSC 377 MSG/CEO <christopher.sipe.2@us.af.mil>; SMITH, CHRISTY L CTR USAF AFGSC 377 MSG/CENMP <christy.smith.2.ctr@us.af.mil>; STONE, KRISTA L GS-08 USAF AFGSC 377 MSG/CEFT <krista.stone@us.af.mil>; THOMPSON, PHILIP L GS-13 USAF AFGSC 377 ABW/SEW <philip.thompson.8@us.af.mil>; VARELA, JAYSON W WG-09 USAF AFGSC 377 MSG/CEOIW <jayson.varela.1@us.af.mil>; WALKER, BLAKE T WG-09 USAF AFGSC 377 MSG/CEOIUD <blake.walker.3@us.af.mil>; WATERS, MONTE R GS-09 USAF AFGSC 377 SFS/S5C <monte.waters.1@us.af.mil>; CARABAJAL, ISAAC L JR GS-11 USAF AFGSC 377 MSG/CENE <isaac.carabajal@us.af.mil>; HAILEY, JUSTIN G GS-11 USAF AFGSC 377 MSG/CENE <justin.hailey.2@us.af.mil>; KRAEMER, DOUGLAS M GS-11 USAF AFGSC 377 MSG/CENE <douglas.kraemer@us.af.mil>; OLIVER, MICHAEL F GS-12 USAF AFGSC 377 MSG/CENE <michael.oliver.27@us.af.mil>; ADKISSON, NICKOLAS B SSgt USAF AFGSC 377 MSG/246-2229 <nickolas.adkisson@us.af.mil>; GLOWNIA, JUSTIN D SrA USAF AFGSC 377 MSG/CED <justin.glownia@us.af.mil>; SEEKS, ZACHARY R SrA USAF AFGSC 377 MISSION SUPPORT GP/CED <zachary.seeks@us.af.mil>
Subject: Dig Permits 1607-013 & 1607-014 ***VIEW IN HTML***

Good morning all,

Please review and coordinate the following permits:

1607-013 <file:///\\kafbdfs00cd\kirtlandDFS\377MSG\CE_ORG_DATA\CE\Dig%20Permit%20File\1607-013.pdf> B638 - Repair water valve

1607-014 <file:///\\kafbdfs00cd\kirtlandDFS\377MSG\CE_ORG_DATA\CE\Dig%20Permit%20File\1607-014.pdf> E of Bulk Fuels - Insert test wells

Thank you.

//Signed//

Christine M. Goodwin, Drafter

Chenega Integrated Mission Support (CIMS)

Office: 505.846.9091

Fax: 505.846.7931

377 MSG/CEC Digging Permits Mail

From: HANECKOW, VALERIE R GS-11 USAF AFGSC 377 SFS/S5C
Sent: Monday, July 25, 2016 8:44 AM
To: 377 MSG/CEC Digging Permits Mail
Cc: WATERS, MONTE R GS-09 USAF AFGSC 377 SFS/S5C
Subject: RE: Dig Permits 1607-013 & 1607-014 ***VIEW IN HTML***
Signed By: valerie.haneckow.2@us.af.mil

SFS approves

From: 377 MSG/CEC Digging Permits Mail
Sent: Monday, July 25, 2016 8:38 AM
To: 377 ABW/SEG Administrative Mailbox <ABWSEG@us.af.mil>; 377 ABW/SEW Administrative Mailbox <377ABWSEW@us.af.mil>; 377 MSG/CED Administrative Mailbox <377MSG.CED@us.af.mil>; BAIRD, DOUG M WG-10 USAF AFGSC 377 MSG/CEOIE <doug.baird@us.af.mil>; BARE, MICHELLE P CTR USAF AFGSC 377 MSG/CEIE <michelle.bare.ctr@us.af.mil>; BARNES, ANTOINE J CTR USAF AFGSC 377 MSG/CEOIP <antoine.barnes.ctr@us.af.mil>; BAROS, RICHARD A JR CTR USAF AFGSC 377 MSG/CEMQ <richard.baros.ctr@us.af.mil>; CARMONA, GERARDO GS-11 USAF AFGSC 377 MSG/SCXP <gerardo.carmona@us.af.mil>; CASHWELL, GRADY K CTR USAF AFGSC 377 MSG/CEMQ <grady.cashwell.ctr@us.af.mil>; CLARKE, JASON P SrA USAF AFGSC 377 AMDS/SGPB <jason.clarke.5@us.af.mil>; CREEK, BEN J WS-10 USAF AFGSC 377 MSG/CEOID <ben.creek@us.af.mil>; DALZELL, MARK A WS-09 USAF AFGSC 377 MSG/CEOIW <mark.dalzell@us.af.mil>; DEBLASSIE, RON S CTR USAF AFGSC 377 MSG/CEMAC <ron.deblassie.ctr@us.af.mil>; EDWARDS, FRANKIE C WG-10 USAF AFGSC 377 MSG/CEOIE <frankie.edwards@us.af.mil>; ELLIS, MICHAEL E CTR USAF AFGSC 377 MSG/SCMO <michael.ellis.17.ctr@us.af.mil>; GARCIA, MARTHA E CIV USAF AFGSC 377 MSG/CEIE <martha.garcia.3@us.af.mil>; GOMEZ, KENNY H CTR USAF AFGSC 377 MSG/CEOHE <kenny.gomez.ctr@us.af.mil>; GROSEK, ADAM M TSgt USAF AFGSC 377 AMDS/SGPB <adam.grosek@us.af.mil>; HAGARTY, PAUL J GS-12 USAF AFGSC 377 AMDS/SGPC <paul.hagarty.1@us.af.mil>; HANECKOW, VALERIE R GS-11 USAF AFGSC 377 SFS/S5C <valerie.haneckow.2@us.af.mil>; JOHNSON, ARTHUR R CTR USAF AFGSC 377 MSG/CEOHP <arthur.johnson.3.ctr@us.af.mil>; LAYMAN, JONATHON K GS-11 USAF AFGSC 377 ABW/SEG <jonathon.layman@us.af.mil>; LUNA, JUSTIN L CTR USAF AFGSC 377 MSG/CEOFP <justin.luna.ctr@us.af.mil>; MENDOZA, DAVID P CTR USAF AFGSC 377 MSG/SCMO <david.mendoza.8.ctr@us.af.mil>; MENDOZA, PAUL P CTR USAF AFGSC 377 MSG/CEOFA <paul.mendoza.ctr@us.af.mil>; MILLER, JOHN A SSgt USAF AFGSC 377 AMDS/SGPB <john.miller.61@us.af.mil>; PEREZ, ARTURO CTR USAF AFGSC 377 MSG/CEMAC <arturo.perez.3.ctr@us.af.mil>; PETERSON, RICHARD W GS-11 USAF AFGSC 377 ABW/SEG <richard.peterson.3@us.af.mil>; RIDLEY, RUSSELL D CTR USAF AFGSC 377 MSG/SCMO <russell.ridley.ctr@us.af.mil>; ROEBUCK, EDDIE V WG-10 USAF AFGSC 377 MSG/CEOID <eddie.roebuck@us.af.mil>; ROMERO, DANIEL WG-10 USAF AFGSC 377 MSG/CEOID <daniel.romero@us.af.mil>; SALAS, JUAN E GS-11 USAF AFGSC 377 MSG/CEF <juan.salas.2@us.af.mil>; SANTIAGO, JOSE A GS-08 USAF AFGSC 377 MSG/CEFT <jose.santiago.2@us.af.mil>; SHEETS, TED L GS-09 USAF AFGSC 377 MSG/CEOE <ted.sheets.1@us.af.mil>; SIPE, CHRISTOPHER W GS-13 USAF AFGSC 377 MSG/CEO <christopher.sipe.2@us.af.mil>; SMITH, CHRISTY L CTR USAF AFGSC 377 MSG/CENMP <christy.smith.2.ctr@us.af.mil>; STONE, KRISTA L GS-08 USAF AFGSC 377 MSG/CEFT <krista.stone@us.af.mil>; THOMPSON, PHILIP L GS-13 USAF AFGSC 377 ABW/SEW

<philip.thompson.8@us.af.mil>; VARELA, JAYSON W WG-09 USAF AFGSC 377 MSG/CEOIW <jayson.varela.1@us.af.mil>; WALKER, BLAKE T WG-09 USAF AFGSC 377 MSG/CEOIUD <blake.walker.3@us.af.mil>; WATERS, MONTE R GS-09 USAF AFGSC 377 SFS/S5C <monte.waters.1@us.af.mil>; CARABAJAL, ISAAC L JR GS-11 USAF AFGSC 377 MSG/CENE <isaac.carabajal@us.af.mil>; HAILEY, JUSTIN G GS-11 USAF AFGSC 377 MSG/CENE <justin.hailey.2@us.af.mil>; KRAEMER, DOUGLAS M GS-11 USAF AFGSC 377 MSG/CENE <douglas.kraemer@us.af.mil>; OLIVER, MICHAEL F GS-12 USAF AFGSC 377 MSG/CENE <michael.oliver.27@us.af.mil>; ADKISSON, NICKOLAS B SSgt USAF AFGSC 377 MSG/246-2229 <nickolas.adkisson@us.af.mil>; GLOWNIA, JUSTIN D SrA USAF AFGSC 377 MSG/CED <justin.glownia@us.af.mil>; SEEKS, ZACHARY R SrA USAF AFGSC 377 MISSION SUPPORT GP/CED <zachary.seeks@us.af.mil>
Subject: Dig Permits 1607-013 & 1607-014 ***VIEW IN HTML***

Good morning all,

Please review and coordinate the following permits:

1607-013 <file:///\\kafbdfs00cd\kirtlandDFS\377MSG\CE_ORG_DATA\CE\Dig%20Permit%20File\1607-013.pdf> B638 - Repair water valve

1607-014 <file:///\\kafbdfs00cd\kirtlandDFS\377MSG\CE_ORG_DATA\CE\Dig%20Permit%20File\1607-014.pdf> E of Bulk Fuels - Insert test wells

Thank you.

//Signed//

Christine M. Goodwin, Drafter

Chenega Integrated Mission Support (CIMS)

Office: 505.846.9091

Fax: 505.846.7931

377 MSG/CEC Digging Permits Mail

From: SALAS, JUAN E GS-11 USAF AFGSC 377 MSG/CEF
Sent: Monday, July 25, 2016 8:47 AM
To: 377 MSG/CEC Digging Permits Mail
Subject: RE: Dig Permits 1607-013 & 1607-014 ***VIEW IN HTML***
Signed By: SALAS.JUAN.ENRIQUE.1125468590

Dig Permits 1607-013 & 1607-014 are approved.

JUAN E. SALAS

Assistant Chief Fire Prevention

(505) 853-6699

From: 377 MSG/CEC Digging Permits Mail
Sent: Monday, July 25, 2016 8:38 AM
To: 377 ABW/SEG Administrative Mailbox <ABWSEG@us.af.mil>; 377 ABW/SEW Administrative Mailbox <377ABWSEW@us.af.mil>; 377 MSG/CED Administrative Mailbox <377MSG.CED@us.af.mil>; BAIRD, DOUG M WG-10 USAF AFGSC 377 MSG/CEOIE <doug.baird@us.af.mil>; BARE, MICHELLE P CTR USAF AFGSC 377 MSG/CEIE <michelle.bare.ctr@us.af.mil>; BARNES, ANTOINE J CTR USAF AFGSC 377 MSG/CEOIP <antoine.barnes.ctr@us.af.mil>; BAROS, RICHARD A JR CTR USAF AFGSC 377 MSG/CEMQ <richard.baros.ctr@us.af.mil>; CARMONA, GERARDO GS-11 USAF AFGSC 377 MSG/SCXP <gerardo.carmona@us.af.mil>; CASHWELL, GRADY K CTR USAF AFGSC 377 MSG/CEMQ <grady.cashwell.ctr@us.af.mil>; CLARKE, JASON P SrA USAF AFGSC 377 AMDS/SGPB <jason.clarke.5@us.af.mil>; CREEK, BEN J WS-10 USAF AFGSC 377 MSG/CEOID <ben.creek@us.af.mil>; DALZELL, MARK A WS-09 USAF AFGSC 377 MSG/CEOIW <mark.dalzell@us.af.mil>; DEBLASSIE, RON S CTR USAF AFGSC 377 MSG/CEMAC <ron.deblassie.ctr@us.af.mil>; EDWARDS, FRANKIE C WG-10 USAF AFGSC 377 MSG/CEOIE <frankie.edwards@us.af.mil>; ELLIS, MICHAEL E CTR USAF AFGSC 377 MSG/SCMO <michael.ellis.17.ctr@us.af.mil>; GARCIA, MARTHA E CIV USAF AFGSC 377 MSG/CEIE <martha.garcia.3@us.af.mil>; GOMEZ, KENNY H CTR USAF AFGSC 377 MSG/CEOHE <kenny.gomez.ctr@us.af.mil>; GROSEK, ADAM M TSgt USAF AFGSC 377 AMDS/SGPB <adam.grosek@us.af.mil>; HAGARTY, PAUL J GS-12 USAF AFGSC 377 AMDS/SGPC <paul.hagarty.1@us.af.mil>; HANECKOW, VALERIE R GS-11 USAF AFGSC 377 SFS/S5C <valerie.haneckow.2@us.af.mil>; JOHNSON, ARTHUR R CTR USAF AFGSC 377 MSG/CEOHP <arthur.johnson.3.ctr@us.af.mil>; LAYMAN, JONATHON K GS-11 USAF AFGSC 377 ABW/SEG <jonathon.layman@us.af.mil>; LUNA, JUSTIN L CTR USAF AFGSC 377 MSG/CEOFP <justin.luna.ctr@us.af.mil>; MENDOZA, DAVID P CTR USAF AFGSC 377 MSG/SCMO <david.mendoza.8.ctr@us.af.mil>; MENDOZA, PAUL P CTR USAF AFGSC 377 MSG/CEOFA <paul.mendoza.ctr@us.af.mil>; MILLER, JOHN A SSgt USAF AFGSC 377 AMDS/SGPB

<john.miller.61@us.af.mil>; PEREZ, ARTURO CTR USAF AFGSC 377 MSG/CEMAC <arturo.perez.3.ctr@us.af.mil>; PETERSON, RICHARD W GS-11 USAF AFGSC 377 ABW/SEG <richard.peterson.3@us.af.mil>; RIDLEY, RUSSELL D CTR USAF AFGSC 377 MSG/SCMO <russell.ridley.ctr@us.af.mil>; ROEBUCK, EDDIE V WG-10 USAF AFGSC 377 MSG/CEOID <eddie.roebuck@us.af.mil>; ROMERO, DANIEL WG-10 USAF AFGSC 377 MSG/CEOID <daniel.romero@us.af.mil>; SALAS, JUAN E GS-11 USAF AFGSC 377 MSG/CEF <juan.salas.2@us.af.mil>; SANTIAGO, JOSE A GS-08 USAF AFGSC 377 MSG/CEFT <jose.santiago.2@us.af.mil>; SHEETS, TED L GS-09 USAF AFGSC 377 MSG/CEOE <ted.sheets.1@us.af.mil>; SIPE, CHRISTOPHER W GS-13 USAF AFGSC 377 MSG/CEO <christopher.sipe.2@us.af.mil>; SMITH, CHRISTY L CTR USAF AFGSC 377 MSG/CENMP <christy.smith.2.ctr@us.af.mil>; STONE, KRISTA L GS-08 USAF AFGSC 377 MSG/CEFT <krista.stone@us.af.mil>; THOMPSON, PHILIP L GS-13 USAF AFGSC 377 ABW/SEW <philip.thompson.8@us.af.mil>; VARELA, JAYSON W WG-09 USAF AFGSC 377 MSG/CEOIW <jayson.varela.1@us.af.mil>; WALKER, BLAKE T WG-09 USAF AFGSC 377 MSG/CEOIUD <blake.walker.3@us.af.mil>; WATERS, MONTE R GS-09 USAF AFGSC 377 SFS/S5C <monte.waters.1@us.af.mil>; CARABAJAL, ISAAC L JR GS-11 USAF AFGSC 377 MSG/CENE <isaac.carabajal@us.af.mil>; HAILEY, JUSTIN G GS-11 USAF AFGSC 377 MSG/CENE <justin.hailey.2@us.af.mil>; KRAEMER, DOUGLAS M GS-11 USAF AFGSC 377 MSG/CENE <douglas.kraemer@us.af.mil>; OLIVER, MICHAEL F GS-12 USAF AFGSC 377 MSG/CENE <michael.oliver.27@us.af.mil>; ADKISSON, NICKOLAS B SSgt USAF AFGSC 377 MSG/246-2229 <nickolas.adkisson@us.af.mil>; GLOWNIA, JUSTIN D SrA USAF AFGSC 377 MSG/CED <justin.glownia@us.af.mil>; SEEKS, ZACHARY R SrA USAF AFGSC 377 MISSION SUPPORT GP/CED <zachary.seeks@us.af.mil>
Subject: Dig Permits 1607-013 & 1607-014 ***VIEW IN HTML***

Good morning all,

Please review and coordinate the following permits:

1607-013 <file:///\\kafbdfs00cd\kirtlandDFS\377MSG\CE_ORG_DATA\CE\Dig%20Permit%20File\1607-013.pdf> B638 - Repair water valve

1607-014 <file:///\\kafbdfs00cd\kirtlandDFS\377MSG\CE_ORG_DATA\CE\Dig%20Permit%20File\1607-014.pdf> E of Bulk Fuels - Insert test wells

Thank you.

//Signed//

Christine M. Goodwin, Drafter

Chenega Integrated Mission Support (CIMS)

Office: 505.846.9091

377 MSG/CEC Digging Permits Mail

From: 377 ABW/SEW Administrative Mailbox
Sent: Monday, July 25, 2016 8:43 AM
To: 377 MSG/CEC Digging Permits Mail
Subject: RE: Dig Permits 1607-013 & 1607-014 ***VIEW IN HTML***
Signed By: charles.crutchfield.1@us.af.mil

SEW is green

Charles "David" Crutchfield, DAFC

Weapons Safety/Range Safety Officer

377 ABW/SEW

2000 WYOMING BLVD

BLDG 20604, ROOM D10

Kirtland AFB NM 87117-5606

DSN: 246-9142, CIV: 505-846-9142

FAX: DSN: 246-9086, CIV: 505-846-9086

Range E-Mail:

377ABW.XP.RangeMgmtOffice@us.af.mil

From: 377 MSG/CEC Digging Permits Mail
Sent: Monday, July 25, 2016 8:38 AM

To: 377 ABW/SEG Administrative Mailbox <ABWSEG@us.af.mil>; 377 ABW/SEW Administrative Mailbox <377ABWSEW@us.af.mil>; 377 MSG/CED Administrative Mailbox <377MSG.CED@us.af.mil>; BAIRD, DOUG M WG-10 USAF AFGSC 377 MSG/CEOIE <doug.baird@us.af.mil>; BARE, MICHELLE P CTR USAF AFGSC 377 MSG/CEIE <michelle.bare.ctr@us.af.mil>; BARNES, ANTOINE J CTR USAF AFGSC 377 MSG/CEOIP <antoine.barnes.ctr@us.af.mil>; BAROS, RICHARD A JR CTR USAF AFGSC 377 MSG/CEMQ <richard.baros.ctr@us.af.mil>; CARMONA, GERARDO GS-11 USAF AFGSC 377 MSG/SCXP <gerardo.carmona@us.af.mil>; CASHWELL, GRADY K CTR USAF AFGSC 377 MSG/CEMQ <grady.cashwell.ctr@us.af.mil>; CLARKE, JASON P SrA USAF AFGSC 377 AMDS/SGPB <jason.clarke.5@us.af.mil>; CREEK, BEN J WS-10 USAF AFGSC 377 MSG/CEOID <ben.creek@us.af.mil>; DALZELL, MARK A WS-09 USAF AFGSC 377 MSG/CEOIW <mark.dalzell@us.af.mil>; DEBLASSIE, RON S CTR USAF AFGSC 377 MSG/CEMAC <ron.deblassie.ctr@us.af.mil>; EDWARDS, FRANKIE C WG-10 USAF AFGSC 377 MSG/CEOIE <frankie.edwards@us.af.mil>; ELLIS, MICHAEL E CTR USAF AFGSC 377 MSG/SCMO <michael.ellis.17.ctr@us.af.mil>; GARCIA, MARTHA E CIV USAF AFGSC 377 MSG/CEIE <martha.garcia.3@us.af.mil>; GOMEZ, KENNY H CTR USAF AFGSC 377 MSG/CEOHE <kenny.gomez.ctr@us.af.mil>; GROSEK, ADAM M TSgt USAF AFGSC 377 AMDS/SGPB <adam.grosek@us.af.mil>; HAGARTY, PAUL J GS-12 USAF AFGSC 377 AMDS/SGPC <paul.hagarty.1@us.af.mil>; HANECKOW, VALERIE R GS-11 USAF AFGSC 377 SFS/S5C <valerie.haneckow.2@us.af.mil>; JOHNSON, ARTHUR R CTR USAF AFGSC 377 MSG/CEOHP <arthur.johnson.3.ctr@us.af.mil>; LAYMAN, JONATHON K GS-11 USAF AFGSC 377 ABW/SEG <jonathon.layman@us.af.mil>; LUNA, JUSTIN L CTR USAF AFGSC 377 MSG/CEOFP <justin.luna.ctr@us.af.mil>; MENDOZA, DAVID P CTR USAF AFGSC 377 MSG/SCMO <david.mendoza.8.ctr@us.af.mil>; MENDOZA, PAUL P CTR USAF AFGSC 377 MSG/CEOFA <paul.mendoza.ctr@us.af.mil>; MILLER, JOHN A SSgt USAF AFGSC 377 AMDS/SGPB <john.miller.61@us.af.mil>; PEREZ, ARTURO CTR USAF AFGSC 377 MSG/CEMAC <arturo.perez.3.ctr@us.af.mil>; PETERSON, RICHARD W GS-11 USAF AFGSC 377 ABW/SEG <richard.peterson.3@us.af.mil>; RIDLEY, RUSSELL D CTR USAF AFGSC 377 MSG/SCMO <russell.ridley.ctr@us.af.mil>; ROEBUCK, EDDIE V WG-10 USAF AFGSC 377 MSG/CEOID <eddie.roebuck@us.af.mil>; ROMERO, DANIEL WG-10 USAF AFGSC 377 MSG/CEOID <daniel.romero@us.af.mil>; SALAS, JUAN E GS-11 USAF AFGSC 377 MSG/CEF <juan.salas.2@us.af.mil>; SANTIAGO, JOSE A GS-08 USAF AFGSC 377 MSG/CEFT <jose.santiago.2@us.af.mil>; SHEETS, TED L GS-09 USAF AFGSC 377 MSG/CEOE <ted.sheets.1@us.af.mil>; SIPE, CHRISTOPHER W GS-13 USAF AFGSC 377 MSG/CEO <christopher.sipe.2@us.af.mil>; SMITH, CHRISTY L CTR USAF AFGSC 377 MSG/CENMP <christy.smith.2.ctr@us.af.mil>; STONE, KRISTA L GS-08 USAF AFGSC 377 MSG/CEFT <krista.stone@us.af.mil>; THOMPSON, PHILIP L GS-13 USAF AFGSC 377 ABW/SEW <philip.thompson.8@us.af.mil>; VARELA, JAYSON W WG-09 USAF AFGSC 377 MSG/CEOIW <jayson.varela.1@us.af.mil>; WALKER, BLAKE T WG-09 USAF AFGSC 377 MSG/CEOIUD <blake.walker.3@us.af.mil>; WATERS, MONTE R GS-09 USAF AFGSC 377 SFS/S5C <monte.waters.1@us.af.mil>; CARABAJAL, ISAAC L JR GS-11 USAF AFGSC 377 MSG/CENE <isaac.carabajal@us.af.mil>; HAILEY, JUSTIN G GS-11 USAF AFGSC 377 MSG/CENE <justin.hailey.2@us.af.mil>; KRAEMER, DOUGLAS M GS-11 USAF AFGSC 377 MSG/CENE <douglas.kraemer@us.af.mil>; OLIVER, MICHAEL F GS-12 USAF AFGSC 377 MSG/CENE <michael.oliver.27@us.af.mil>; ADKISSON, NICKOLAS B SSgt USAF AFGSC 377 MSG/246-2229 <nickolas.adkisson@us.af.mil>; GLOWNIA, JUSTIN D SrA USAF AFGSC 377 MSG/CED <justin.glownia@us.af.mil>; SEEKS, ZACHARY R SrA USAF AFGSC 377 MISSION SUPPORT GP/CED <zachary.seeks@us.af.mil>
Subject: Dig Permits 1607-013 & 1607-014 ***VIEW IN HTML***

Good morning all,

SEG

377 MSG/CEC Digging Permits Mail

From:	LAYMAN, JONATHON K GS-11 USAF AFGSC 377 ABW/SEG
Sent:	Monday, August 15, 2016 9:46 AM
To:	377 MSG/CEC Digging Permits Mail
Subject:	RE: Dig Permit Status: 1607-013 & 1607-014 ***VIEW IN HTML***
Attachments:	TRENCHING REQUIRMENTS CFR 1926 Subpart P.docx; OSHA-TRENCHING & EXCAVATION SAFETY COMBINED.pdf
Signed By:	jonathon.layman@us.af.mil

Both APPROVED ---See attachments—The employer must comply with the trenching and excavation requirements of 29 CFR 1926.651 and 1926.652 or comparable OSHA-approved state plan requirements.

Jon K. Layman, CSHO

377 ABW/SEG

846-9088

From: 377 MSG/CEC Digging Permits Mail
Sent: Monday, August 15, 2016 9:23 AM
To: LAYMAN, JONATHON K GS-11 USAF AFGSC 377 ABW/SEG <jonathon.layman@us.af.mil>
Subject: Dig Permit Status: 1607-013 & 1607-014 ***VIEW IN HTML***

Good morning Jon,

I do hope your weekend was an awesome one.

Please release the following permits:

1607-013 <file:///\\kafbdfs00cd\kirtlanddfs\377MSG\CE_ORG_DATA\CE\Dig%20Permit%20File\1607-013.pdf>

1607-014 <file:///\\kafbdfs00cd\kirtlanddfs\377MSG\CE_ORG_DATA\CE\Dig%20Permit%20File\1607-014.pdf>

Thank you.

//Signed//

Christine M. Goodwin, Drafter

Chenega Integrated Mission Support (CIMS)

Office: 505.846.9091

Fax: 505.846.7931

SEG

377 ABW SAFETY
DIG PERMIT REQUIREMENTS

REVIEWED BY JON K. LAYMAN ON 1 APRIL 2016

This is just a highlight of some of the requirements found in CFR 1926 Subpart P & AFI 91-203

Contractor Operations: Site supervisor in charge of a trenching operation needs to comply with all of the provisions found in OSHA Standard 29CFR 1926 Subpart P.

DoD Operations: Site supervisor in charge of a trenching operation needs to comply with all of the provisions found in OSHA Standard 29CFR 1926 Subpart P and AFI 91-203 Chapter 25.

- The walls and faces of excavations and trenches over five (5) feet in depth, where workers may be exposed to danger of a cave-in, shall be guarded by a shoring system, sloping and benching system or some other equivalent means. 29 CFR 1926, Subpart P & AFI 91-203.25.8
- Shoring is not required in excavations that are less than 5 feet in depth provided an examination of the ground by a competent person determines that there is no indication of a potential cave-in. 29 CFR 1926.652(a)(1)(ii) & AFI 91-203 25.8
  - Competent person means one who is capable of identifying existing and predictable hazards in the surroundings, or working conditions which are unsanitary, hazardous, or dangerous to employees, and who has authorization to take prompt corrective measures to eliminate them.29 CFR 1926.650(b) & AFI91-203 Attachment 1 under Terms
- Employees shall be protected from excavated or other materials or equipment that could pose a hazard by falling or rolling into excavations. Protection shall be provided by placing and keeping such materials or equipment at least 2 feet from the edge of excavations, or by the use of retaining devices that are sufficient to prevent materials or equipment from falling or rolling into excavations, or by a combination of both if necessary.29 CFR 1926.651(j)(2) & AFI 91-203 25.8.1
- A stairway, ladder, ramp or other safe means of egress shall be located in trench excavations that are 4 feet or more in depth so as to require no more than 25 feet of lateral travel for employees. 29 CFR 1926.651(c)(2) & AFI 91-203 25.8.2
- Daily inspections of excavations, the adjacent areas, and protective systems shall be made by a competent person for evidence of a situation that could result in possible cave-ins, indications of failure of protective systems, hazardous atmospheres, or other hazardous conditions. An inspection shall be conducted by the competent person prior to the start of work and as needed throughout the shift. Inspections shall also be made after every rainstorm or other hazard increasing occurrence. These inspections are only required when employee exposure can be reasonably anticipated. 29 CFR 1926-651(k)(1) & AFI 91-203 25.8.3
- Personnel, cones or other devices will be positioned to warn motorists in advance of the construction site(s). 29 CFR 1926.201(a)(1) [Flagmen], 29 CFR 1926.200(g)(1) & AFI 91-203 25.9
- Employees exposed to public vehicular traffic shall be provided with, and shall wear, warning vests or other suitable garments marked with or made of reflectorized or high-visibility material.29 CFR 1926.651 (d) & AFI 91-203 25.9

ALBUQUERQUE ENVIRONMENTAL HEALTH DEPARTMENT - AIR QUALITY PROGRAM
PHYSICAL ADDRESS - ONE CIVIC PLAZA NW, 3RD FLOOR, ROOM 3047, ALBUQUERQUE, NEW MEXICO 87102
MAILING ADDRESS - P.O. BOX 1293, ALBUQUERQUE, NEW MEXICO 87103
505) 768 - 1972 (VOICE) 1-800-659-8331 (NEW MEXICO RELAY) (505) 768 - 1977 (FAX)

APPLICATION FOR A **FUGITIVE DUST CONTROL PROGRAMMATIC PERMIT** IN BERNALILLO COUNTY
ALBUQUERQUE - BERNALILLO COUNTY AIR QUALITY CONTROL BOARD REGULATION 20.11.20 NMAC
(ROUTINE MAINTENANCE/ACTIVE OPERATIONS PERMIT FOR SURFACE DISTURBANCE)

DIVISION RECEIPT STAMP BELOW THIS LINE

EFFECTIVE DATE OF THIS APPLICATION FORM: 10/14

RECEIVED ENVIRONMENTAL HEALTH 2014 NOV 10 PM 2:53

SUBMITTAL DATE/TIME 11/10/14

RECEIVED BY Flor Varos.

PERMIT # 6957-P

A PROGRAMMATIC PERMIT (PERMIT) IS A FUGITIVE DUST CONTROL PERMIT, VALID FOR UP TO FIVE YEARS, ISSUED TO A PERMITTEE THAT PERFORMS ROUTINE MAINTENANCE OR ROUTINE ACTIVE OPERATIONS ON LAND OR AT FACILITIES OF ¾ OF AN ACRE OR MORE, WHICH DOES NOT INCLUDE FULL DEPTH RECONSTRUCTION OF A ROADWAY OR SUBSTANTIAL REMOVAL AND REPLACEMENT OF A MANMADE FACILITY.

PART A. - BUSINESS, AGENCY, OR PROPERTY OWNER (CLEARLY PRINT OR TYPE)

1. BUSINESS/AGENCY NAME: KIRTLAND AIR FORCE BASE BULK FUELS FACILITY

AND/OR

2. PROPERTY OWNERS NAME _____

PART B. - FACILITY INFORMATION AND GENERAL ACTIVITIES (CLEARLY PRINT OR TYPE)

IF THE PERMITTEE WISHES TO INCLUDE MULTIPLE FACILITY (SITE) LOCATIONS UNDER THE SAME PERMIT, SUBMIT THE REQUIRED INFORMATION REQUESTED FOR EACH INDIVIDUAL SITE BY SUBMITTING ADDITIONAL COPIES OF PAGES 1 & 2 AS NECESSARY.

SUBMIT AS AN ATTACHMENT TO THIS APPLICATION AN (8 ½" X 11" OR 11" X 17") SITE MAP FOR EACH FACILITY LOCATION

1. FUGITIVE DUST FACILITY (SITE) LOCATION: KIRTLAND AIR FORCE BASE BULK FUELS FACILITY

2. STREET ADDRESS OF FACILITY (if available) _____

3. MAJOR CROSS STREETS OR INTERSECTION NEARBY FACILITY: Gibson Blvd. SE and Truman St. SE

4. TOTAL ACRES OF THIS FACILITY ~~2,000~~ 564 ACRES TSK 8/5/16

5. TOTAL ACRES OF THIS FACILITY SUBJECT TO ROUTINE MAINTENANCE/ACTIVE OPERATIONS ~~41~~ 18.5 ACRES TSK 8/5/16

6. TOTAL MILES OF ROADS/EASEMENTS FOR THIS FACILITY SUBJECT TO ROUTINE MAINTENANCE/ACTIVE OPERATIONS NA

7. TOTAL MILES OF ROADS/EASEMENTS FOR THIS FACILITY CONVERTED TO ACRES NA

8. PROVIDE A DESCRIPTION OF THIS FACILITY'S OPERATION(S): INSTALLATION OF WELLS, WATER TREATMENT SYSTEM, SOIL VAPOR EXTRACTION SYSTEM FOR FUEL CONTAMINATION CHARACTERIZATION AND REMEDIATION AT SWMUs ST-106 AND SS-111.

9. DESCRIBE THE TYPE OF ACTIVITIES AT THIS FACILITY THAT MAY GENERATE FUGITIVE DUST: SURFACE DISTURBANCE DURING WELL INSTALLATION AND CONSTRUCTION ACTIVITIES.

ENTERED

Department Review by _____ **Required Initials of Permittee** MA

A	B	C	D	E
SOURCE CLASSIFICATION (SEE DEFINITIONS AT THE BOTTOM OF THIS TABLE)	ACRES ROUNDED TO NEAREST WHOLE NUMBER TO BE CONTROLLED AT EACH SOURCE CLASSIFICATION FROM COLUMN A (CONVERT MILES TO ACRES)	EMISSION CONTROL FACTOR MULTIPLIER (20.11.2.15 G. NMAC FEES REGULATION)	GENERAL DESCRIPTION OF THE REASONABLY AVAILABLE CONTROL MEASURE(S) CURRENTLY IN PLACE OR TO BE USED TO MAINTAIN THE ACREAGE AT EACH SOURCE CLASSIFICATION CLAIMED IN COLUMN A (SEE PART E LIST ON PAGE 3) (EXAMPLE: TRAFFIC, WINDBREAKS, ETC.)	TOTAL FEE PER CLASSIFICATION [COLUMN B TIMES (X) COLUMN C]
LOW IMPACT [redacted]		.1		
MODERATE IMPACT [redacted]	~~41~~ 19 TSK 8/5/16	.5	WATERING, TRAFFIC, LANDSCAPING (WET SUPPRESSION, ENFORCED SPEED LIMITS AND TRAFFIC CALMING, RESEEDING; SEE D-1)	~~20.5~~ 9.5 TSK 8/5/16
HIGH IMPACT [redacted]		.9		
MULTIPLY THE SUM OF COLUMN (E) BY $135.00			$135.00 X	~~20.5~~ 9.5 TSK 8/5/16
			ANTICIPATED PERMIT FEE DUE	~~$2767.5~~ TSK $1,282.5 8/5/16

ABBREVIATED DEFINITONS OF SOURCE CLASSIFICATIONS

NO IMPACT MEANS ACTIVE AND INACTIVE SURFACE AREAS THAT PRODUCE VIRTUALLY NO FUGITIVE DUST. SUCH LAND SURFACES ARE EXEMPT FROM THE FUGITIVE DUST CONTROL REGULATION OR REQUIREMENTS TO PAY FEES

LOW IMPACT MEANS ACTIVE AND INACTIVE SURFACE AREAS THAT ARE APPROXIMATELY 90% CONTROLLED

MODERATE IMPACT MEANS ACTIVE AND INACTIVE SURFACE AREAS THAT ARE APPROXIMATELY 50% CONTROLLED

HIGH IMPACT MEANS ACTIVE AND INACTIVE SURFACE AREAS THAT ARE APPROXIMATELY 10% CONTROLLED

UPON RECEIPT OF YOUR APPLICATION, THE DEPARTMENT WILL REVIEW AND VERIFY THE INFORMATION SUBMITTED. ONCE THE DEPARTMENT HAS DETERMINED THAT THE APPLICATION IS COMPLETE, THE DEPARTMENT WILL SIGN THE APPLICATION AND RETURN A COMPLETED COPY TO YOU AS YOUR PERMIT. SUBSEQUENTLY, AN INVOICE WILL BE SENT TO YOU FOR INITIAL PAYMENT OF THE PERMIT FEE. EACH YEAR THEREAFTER, THE DEPARTMENT WILL ALSO SEND AN INVOICE FOR THE ANNUAL FEES DUE. THE APPLICATION MAY BE SENT BY MAIL TO THE ADDRESS THAT APPEARS AT THE TOP OF PAGE 1 OF THIS FORM OR IT MAY BE HAND DELIVERED TO THE SAME ADDRESS BETWEEN THE HOURS OF 8:00AM - 4:30PM MONDAY THROUGH FRIDAY.

PART D. – FUGITIVE DUST CONTROL PLAN

(CLEARLY PRINT OR TYPE)

THE "PERMITTEE" IS REQUIRED TO COMPLY WITH A FUGITIVE DUST CONTROL PLAN (PLAN) THAT DETAILS THE FUGITIVE DUST CONTROL MEASURES THAT WILL BE USED TO MITIGATE THE RELEASE OF FUGITIVE DUST FROM ROUTINE ACTIVE OPERATIONS AND MAINTENANCE. IF YOU ARE NOT SUBMITTING, AS AN ATTACHMENT TO THIS APPLICATION, AN ALTERNATIVE PLAN THEN YOU MUST COMPLETE PART D1 - D2 BELOW TO COMPLETE YOUR FUGITIVE DUST CONTROL PLAN.

1. SUMMARIZE IN DETAIL HOW THE REASONABLY AVAILABLE CONTROL MEASURES CURRENTLY IN PLACE, OR THAT YOU HAVE SELECTED IN COLUMN D OF THE PART C TABLE ABOVE WILL BE USED TO LIMIT OR PREVENT THE RELEASE OF FUGITIVE DUST FROM ROUTINE ACTIVE OPERATIONS AND/OR MAINTENANCE AT THIS FACILITY. (FOR EXAMPLE CREDIT CAN BE TAKEN FOR: EXISTING TREES OR SHRUBBERY, ALONG AT LEAST 50% OF THE PERIMETER OF THE FACILITY, AS A WINDBREAK; OR SALVAGED VEHICLES, MATERIALS, OR EQUIPMENT AT A SALVAGE YARD THAT FORM AN EFFECTIVE WINDBREAK; OR EXISTING FENCING THAT PREVENTS VEHICLE ACCESS TO PROPERTY AS A TRAFFIC CONTROL). DESCRIBE THE HEIGHT, LENGTH, LOCATIONS, TYPES, AMOUNTS, ETC. FOR ALL METHODS TO BE USED AS CONTROL MEASURES. AS A GENERAL RULE, THE DEPARTMENT WILL ALLOW CREDIT FOR WINDBREAKS FOR A LATERAL DISTANCE EQUAL TO 10 TIMES THE HEIGHT OF THE WINDBREAK. THEREFORE, A 6 FOOT HIGH WINDREAK WILL BE CREDITED WITH REDUCING DUST EMISSIONS FOR A DISTANCE OF 60 FEET FROM THE FENCE.

Watering – using wet suppression will help reduce the amount of dust that will become air bound from activities at site. The wet suppression will be used as needed; if wind speeds pick up, more water will be added to the affected areas. During a high wind event the activities will be stopped.
Traffic – traffic controls, including decreased speed limits with appropriate enforcement; other traffic calming methods, vehicle access restrictions and controls; road closures or barricades; and off road vehicle access controls and closures will reduce the amount of dust generated. Also, using properly secured tarps or cargo covering that covers the entire surface area of the load will prevent leakage from the truck bed, sideboards, tailgate, or bottom dump gate will decrease dust. The active areas will be fenced which will reduce traffic during construction and maintenance operations.
Landscaping - reseeding using native grasses as specified in 20.11.20.24 NMAC for areas where the pipeline trench affects the soil

Department Review by _____ **Required Initials of Permittee** MA

and native vegetation.

2. DESCRIBE THE ACTION(S) THAT WILL BE TAKEN TO MITIGATE CLAIMS OF PROPERTY DAMAGE BY FUGITIVE DUST AT/FROM THIS FACILITY.

Will respond to reasonable complaints and will clean up affected areas.

Department Review by_____ **Required Initials of Permittee** MA

PART E. - REASONABLY AVAILABLE CONTROL MEASURES

THE "PERMITTEE" SHALL INCLUDE IN THE PERMIT APPLICATION ONE OR MORE OF THE APPLICABLE REASONABLY AVAILABLE CONTROL TYPE MEASURES LISTED BELOW (ABBREVIATED LIST), OR ONE OR MORE OTHER (ALTERNATIVE) FUGITIVE DUST CONTROL MEASURES, INCLUDING MEASURES TAKEN TO COMPLY WITH ANY OTHER STATUTE OR REGULATION THAT WOULD ALSO EFFECTIVELY CONTROL FUGITIVE DUST DURING ROUTINE ACTIVE OPERATIONS AND MAINTENANCE AND INACTIVE OPERATIONS. FOR A MORE COMPLETE LIST OF CONTROL TYPE MEASURES YOU CAN REFER TO SECTION 23 OF PART 20.11.20 NMAC – FUGITIVE DUST CONTROL.

IF THE "PERMITTEE" CHOOSES TO SUBMIT AS AN ATTACHMENT TO THIS APPLICATION AN ALTERNATIVE FUGITIVE DUST CONTROL PLAN (PLAN) IN LIEU OF USING ANY OF THE REASONABLY AVAILABLE CONTROL MEASURES GIVEN IN PART E BELOW OR FROM SECTION 23 OF PART 20.11.20 NMAC – FUGITIVE DUST CONTROL, THE ALTERNATIVE PLAN (SUCH AS A STORM WATER POLLUTION PREVENTION PLAN) MUST INCLUDE DETAILED INFORMATION THAT ADDRESSES: 1) THE REASONABLY AVAILABLE CONTROL MEASURES TO MITIGATE THE RELEASE OF FUGITIVE DUST FROM ROUTINE ACTIVE OPERATIONS AND MAINTENANCE; AND 2) ACTION(S) TO BE TAKEN TO MITIGATE PROPERTY DAMAGE (SEE PART D OF THIS APPLICATION). IF SUBMITTING AN ALTERNATIVE PLAN YOU STILL MUST COMPLETE PARTS A, B, C, F, AND G OF THIS APPLICATION.

USE THE ONE WORD UNDERLINED HEADINGS BELOW WHEN FILLING IN THE CONTROL MEASURES IN COLUMN D OF THE PART C TABLE ON PAGE 2. THESE MEASURES CAN REDUCE THE RELEASE OF FUGITIVE DUST FROM YOUR FACILITY OR REDUCE THE AMOUNT OF ACREAGE/MILES REQUIRING CONTROL IF APPLIED AS PERMANENT STABILIZATION (FOR EXAMPLE: MAINTAINED PAVEMENT).

PAVING

- paving using well-maintained recycled asphalt, asphaltic concrete, concrete, or petroleum products legal for such use;
- using paved or gravel entry/exit aprons with devices, such as steel grates, capable of knocking mud and bulk material off vehicle tires;
- surfacing with gravel or other mulch material of a size and density sufficient to prevent surface material from becoming airborne

WATERING

- using wet suppression;
- watering the site at the beginning and/or end of each day sufficient to stabilize the area;
- using dust suppressants applied in amounts, rates, and maintained as recommended by the manufacturer (submit manufacturer's data with application)

WINDBREAKS

- installing upwind windbreaks, including fabric fences with the bottom of the fence sufficiently anchored to the ground to prevent material from blowing underneath the fence; all windbreaks and fabric fences should be maintained in an upright and functional condition at all times; all accumulated material on the windward side of the windbreak should be periodically removed to prevent failure of the windbreak;
- installing permanent perimeter and interior walls;
- For Salvage Yards - using salvaged vehicles arranged in rows with minimum spacing between vehicles;
- For Construction or Storage Yards – using construction materials, equipment, trailers, buildings or structures to create a windbreak;
- Using dense hedges, shrubbery or trees;
- Using sand fences, board rail fences, or similar fences that have openings on approximately 50% of the surface;
- Natural barriers

TRAFFIC

- using traffic controls, including decreased speed limits with appropriate enforcement; other traffic calming methods, vehicle access restrictions and controls; road closures or barricades; and off-road vehicle access controls and closures;
- cleaning up spillage and track out as necessary to prevent particulates from being pulverized and entrained into the atmosphere;
- performing regularly scheduled vacuum street cleaning or wet sweeping;
- using properly secured tarps or cargo covering that covers the entire surface area of the load;
- installing fencing to limit vehicle access to property

LANDSCAPING

- reseeding using native grasses as specified in 20.11.20.24 NMAC – native grass seeding and mulch specifications;
- xeriscaping;
- mulching and crimping of straw or hay as specified in Section 20.11.20.24 NMAC;
- conventional landscaping techniques

IT IS REQUIRED DURING A HIGH WIND EVENT THAT ALL FUGITIVE DUST SOURCES CEASE ALL ACTIVE OPERATIONS THAT ARE CAPABLE OF PRODUCING FUGITIVE DUST. A HIGH WIND EVENT IS A CONDITION ANNOUNCED BY THE DEPARTMENT OF WIND SPEEDS OF APPROXIMATELY 30 MILES PER HOUR OR GREATER THAT, WHEN ACCOMPANIED BY DRY SOIL CONDITIONS, IS LIKELY TO RESULT IN WIDESPREAD REDUCED VISIBILITY DUE TO BLOWING FUGITIVE DUST AND MAY RESULT IN ELEVATED PARTICULATE LEVELS THAT MAY CONTRIBUTE TO AN

Department Review by_____ **Required Initials of Permittee** MA

EXCEEDANCE OR VIOLATION OF AMBIENT AIR QUALITY STANDARDS.

PART F. – SIGNATURE AUTHORITY OF PERMITTEE

THIS APPLICATION SHALL INCLUDE A FUGITIVE DUST CONTROL PLAN THAT MAY UTILIZE REASONABLY AVAILABLE CONTROL MEASURES TO MITIGATE FUGITIVE DUST TO MEET THE OBJECTIVES OF PART 20.11.20 NMAC – FUGITIVE DUST CONTROL.

BY SIGNING BELOW, THE APPLICANT CERTIFIES THAT THE INFORMATION PROVIDED IN THIS APPLICATION FOR A FUGITIVE DUST CONTROL PROGRAMMATIC PERMIT IS TRUE, ACCURATE AND COMPLETE, AND THE APPLICANT AGREES TO BE THE "PERMITTEE".

A "PERMITTEE" IS A PERSON, OWNER OR OPERATOR AND ALL LEGAL HEIRS, SUCCESSORS, AND ASSIGNS WHO HAS APPLIED FOR AND OBTAINED A FUGITIVE DUST CONTROL PERMIT APPROVED BY THE DEPARTMENT. THE "PERMITTEE" AGREES TO TAKE ALL ACTIONS REQUIRED BY THE FUGITIVE DUST CONTROL PERMIT ISSUED BY THE DEPARTMENT TO PREVENT A VIOLATION OF 20.11.20 NMAC – FUGITIVE DUST CONTROL, INCLUDING STOPPING ACTIVE OPERATIONS, IF NECESSARY. THE "PERMITTEE" IS RESPONSIBLE FOR COMPLYING WITH THE FUGITIVE DUST CONTROL PERMIT, THE FUGITIVE DUST CONTROL PLAN, AND ALL REQUIREMENTS OF PART 20.11.20 NMAC - FUGITIVE DUST CONTROL. FAILURE TO COMPLY SHALL BE A VIOLATION OF PART 20.11.20 NMAC – FUGITIVE DUST CONTROL.

THE PERMITTEE SIGNATURE BOX MUST BE COMPLETED

[ONE SET OF SIGNATURE PAGES IS ADEQUATE FOR MULTIPLE FACILITY (SITE) LOCATIONS TO BE PERMITTED UNDER THE SAME PERMITTEE AND OWNER]

(COMPLETE ALL APPLICABLE INFORMATION)

CB&I FEDERAL SERVICES IF A BUSINESS, PRINT PERMITTEE'S BUSINESS NAME	
Mike Amdurer PRINT NAME OF INDIVIDUAL SIGNING FOR PERMITTEE	Project Manager PRINT TITLE OF INDIVIDUAL SIGNING FOR PERMITTEE
Michael Amd SIGNATURE OF PERMITTEE	MA INITIALS OF PERMITTEE DATE SUBMITTED
2400 Louisiana Blvd. NE Suite 300 — Albuquerque MAILING ADDRESS OF PERMITTEE — CITY	New Mexico STATE
505-262-8906 — 505-967-9521 ~~303-486-2503~~ — ~~303-513-1155~~ PHONE NUMBER OF PERMITTEE — CELL PHONE OF PERMITTEE	N/A PAGER NUMBER OF PERMITTEE
Tara.Kunkel@CBIFederalServices.com Designee: Tara Kunkel ~~MIKE.AMDURER@CBIFEDERALSERVICES.COM~~ EMAIL ADDRESS OF PERMITTEE	

TSK 8/5/16

TSK 8/5/16

87110 — 505-262-8855
ZIP CODE — FAX NUMBER OF PERMITTEE

THE PERMITTEE SHALL MAKE THE PERMIT AVAILABLE AND EXPLAIN THE REQUIREMENTS OF THE PERMIT TO APPROPRIATE EMPLOYEES, AGENTS, CONTRACTORS, AND ANY OTHER PERSON INVOLVED IN ACTIVE OPERATIONS OR MAINTENANCE AT THIS FACILITY TO ASSIST IN MAINTAINING COMPLIANCE WITH PART 20.11.20 – FUGITIVE DUST CONTROL.
THE PERMITTEE IS RESPONSIBLE FOR MAINTAINING CONTROL MEASURES THAT PREVENT OR ABATE UNREASONABLE INTERFERENCE WITH PUBLIC WELFARE, VISIBILITY AND THE REASONABLE USE OF PROPERTY.

THE APPLICANT SIGNING ABOVE AND APPLYING TO BE THE "PERMITTEE", MAY DESIGNATE AN ADDITIONAL PERSON(S) [INCLUDES AN ENTITY(IES)] TO BE A RESPONSIBLE PERSON AS DEFINED IN 20.11.20.7DD NMAC (DEFINITIONS), IF THE PERSON(S) AGREES IN WRITING TO BE A RESPONSIBLE PERSON.

BEFORE DEPARTMENT REVIEW AND ISSUANCE OF A FUGITIVE DUST CONTROL PROGRAMMATIC PERMIT, IF THE PERMITTEE WISHES TO DESIGNATE A PERSON(S) AS A RESPONSIBLE PERSON(S) FOR COMPLYING WITH ALL OR SPECIFIC ELEMENTS OF THE FUGITIVE DUST CONTROL PERMIT, THE FUGITIVE DUST CONTROL PLAN, AND PART 20.11.20 NMAC.- FUGITIVE DUST CONTROL, THEN THE PERMITTEE MAY REQUEST AN ADDITIONAL RESPONSIBLE PERSON SIGNATURE FORM, WHICH MAY BE ADDED TO THE FUGITIVE DUST CONTROL PERMIT APPLICATION. THE RESPONSIBLE PERSON SIGNATURE FORM MUST INCLUDE ALL APPLICABLE INFORMATION CONCERNING THE DESIGNATED RESPONSIBLE PERSON(S). AFTER THE ISSUANCE OF THE PERMIT, THE DEPARTMENT MAY APPROVE IN WRITING AN AMENDMENT TO THE PERMIT TO ADD OR

Department Review by _____ **Required Initials of Permittee** MA

CHANGE A DESIGNATED RESPONSIBLE PERSON(S).

PART G. – FACILITY OWNER INFORMATION (COMPLETE THE OWNER INFORMATION BELOW ONLY IF DIFFERENT THAN THE PERSON WHO HAS SIGNED AS THE PERMITTEE IN SECTION **F**.

However, READ ALL THE INFORMATION BELOW, EVEN IF NOT SIGNING THE FACILITY OWNER INFORMATION BOX. THE PERMITTEE MUST INITIAL THE BOTTOM RIGHT CORNER OF ALL 5 PAGES TO ENSURE THAT ALL THE APPLICATION INFORMATION PROVIDED HAS BEEN REVIEWED.

IF THE PERMITTEE FAILS TO COMPLY WITH THE PROVISIONS OF 20.11.20 NMAC – FUGITIVE DUST CONTROL, THE OWNER, IF DIFFERENT FROM THE PERMITTEE, SHALL BE RESPONSIBLE FOR COMPLYING WITH THE PERMIT. IF THE PERMITTEE FAILS TO TAKE ALL REQUIRED ACTIONS TO PREVENT A VIOLATION OF 20.11.20 NMAC – FUGITIVE DUST CONTROL, THE OWNER SHALL BE RESPONSIBLE TO TAKE ALL ACTIONS REQUIRED TO PREVENT OR SATISFACTORILY RESOLVE A VIOLATION OF 20.11.20 NMAC – FUGITIVE DUST CONTROL, INCLUDING STOPPING ALL ACTIVE OPERATIONS, IF NECESSARY. TO MITIGATE FUGITIVE DUST, ALL INACTIVE DISTURBED SURFACE AREAS MUST BE STABILIZED AND MAINTAINED IN STABLE CONDITION BY THE OWNER, PERMITTEE OR PERSON RESPONSIBLE FOR MAINTENANCE OF THE FACILITY. FAILURE TO COMPLY SHALL BE A VIOLATION OF 20.11.20 NMAC – FUGITIVE DUST CONTROL.

FACILITY OWNER INFORMATION (COMPLETE ALL APPLICABLE INFORMATION)

UNITED STATES AIR FORCE, KIRTLAND AIR FORCE BASE
IF A BUSINESS, PRINT FACILITY OWNER'S BUSINESS NAME

Tom D. Miller, Colonel, USAF
PRINT NAME OF INDIVIDUAL SIGNING FOR FACILITY OWNER

Installation Commander
PRINT TITLE OF INDIVIDUAL SIGNING FOR FACILITY OWNER

Tom D. Miller
SIGNATURE OF FACILITY OWNER

TDM
INITIALS OF FACILITY OWNER

3 Nov 14
DATE SIGNED

2050 Wyoming Blvd SE
MAILING ADDRESS OF FACILITY OWNER

Kirtland AFB
CITY

NM
STATE

87117
ZIP CODE

(505)846-8546
PHONE OF FACILITY OWNER

N/A
CELL OF FACILITY OWNER

N/A
PAGER OF FACILITY OWNER

(505)853-6970
FAX OF FACILITY OWNER

JOHN.PIKE@US.AF.MIL
EMAIL ADDRESS OF FACILITY OWNER

THE **GENERAL PROVISIONS** OF 20.11.20 NMAC – FUGITIVE DUST CONTROL - STATES THAT IT SHALL BE A VIOLATION OF 20.11.20 NMAC TO ALLOW FUGITIVE DUST, TRACK-OUT, OR TRANSPORTED MATERIAL FROM ANY ACTIVE OPERATION, OPEN STORAGE PILE, STOCKPILE, PAVED OR UNPAVED ROADWAY, DISTURBED SURFACE AREA, OR INACTIVE DISTURBED SURFACE AREA TO CROSS OR BE CARRIED BEYOND THE PROPERTY LINE, RIGHT-OF-WAY, EASEMENT OR ANY OTHER AREA UNDER CONTROL OF THE PERSON GENERATING OR ALLOWING THE FUGITIVE DUST IF THE FUGITIVE DUST MAY:

1) WITH REASONABLE PROBABILITY INJURE HUMAN HEALTH OR ANIMAL OR PLANT LIFE;

2) UNREASONABLY INTERFERE WITH THE PUBLIC WELFARE, VISIBILITY OR THE REASONABLE USE OF PROPERTY;

3) BE VISIBLE FOR A TOTAL OF 15 MINUTES OR MORE DURING ANY CONSECUTIVE ONE HOUR OBSERVATION PERIOD USING THE VISIBLE FUGITIVE DUST DETECTION METHOD IN 20.11.20.26 (VISUAL DETERMINATION OF FUGITIVE DUST EMISSIONS VIOLATIONS) OR AN EQUIVALENT METHOD APPROVED IN WRITING BY THE DEPARTMENT.

PURSUANT TO THE AIR QUALITY CONTROL ACT, CHAPTER 74, ARTICLE 2 NEW MEXICO STATUTES ANNOTATED 1978, AS AMENDED; THE ALBUQUERQUE JOINT AIR QUALITY CONTROL BOARD ORDINANCE, 9-5-1-1 ROA 1994; THE BERNALILLO COUNTY JOINT AIR QUALITY CONTROL BOARD ORDINANCE, BERNALILLO COUNTY ORDINANCE 94-5, AND THE ALBUQUERQUE/BERNALILLO COUNTY AIR QUALITY CONTROL BOARD (A/BCAQCB) REGULATION TITLE 20, CHAPTER 11, PART 20, NEW MEXICO ADMINISTRATIVE CODE (NMAC), (20.11.20 NMAC) - FUGITIVE DUST CONTROL, AND UPON AUTHORIZED SIGNATURES BELOW, THIS APPLICATION TOGETHER WITH ASSOCIATED DRAWINGS, PLANS, APPENDED DOCUMENTS, OTHER DATA, AND ANY CONDITIONS ATTACHED TO THE PERMIT BY THE DEPARTMENT, WILL BECOME THE FUGITIVE DUST CONTROL PROGRAMMATIC PERMIT.

AREA BELOW FOR DEPARTMENT USE.

DOES THE DEPARTMENT APPROVAL BELOW INCLUDE APPROVAL FOR ANY BULK MATERIAL STOCKPILES TO EXCEED 15 FEET _____ YES X NO

IF YES, MAXIMUM HEIGHT ALLOWED _____ FEET

APPLICATION REVIEWED BY:	DEEMED COMPLETE DATE	PERMIT ISSUED BY:	ISSUE DATE	EXPIRATION DATE
Tony Romero AIR QUALITY PROGRAM	11 / 14 /20 14	Tony Romero AIR QUALITY PROGRAM	11 / 14 /20 14	11 / 14 /20 19

Department Review by TR **Required Initials of Permittee** MA

Department Review by_____ **Required Initials of Permittee** WA

Table 1. Fugitive Dust Permit Acre Calculations

TK 8/5/2016

	length (feet)	width (feet)	square feet	additonal 30% for surrounding area	conversion from feet to acres	acres
Gibson Laydown yard	315	400	126000	not necessary	2.30E-05	2.9
Gibson Laydown yard (additional)	500	75	37500	not necessary	2.30E-05	0.9
Soil Vapor Wells Laydown yard and the Bulk Fuels Facility	600	1525	915000	not necessary	2.30E-05	21.0
Groundwater Treatment Pipeline	8350	40	334000	not necessary	2.30E-05	7.7
Groundwater Infiltration Gallery	500	500	250000	325000	2.30E-05	7.5
Groundwater Treatment System	100	100	10000	13000	2.30E-05	0.3
Veteran Affairs Hospital Laydown yard	150	150	22500	not necessary	2.30E-05	0.5
TOTAL						41

please see new Table 1 with new and adjusted areas shown.

Table 1. Fugitive Dust Permit Acre Calculations						
	length (feet)	width (feet)	square feet	additional 30% for surrounding area?	conversion from feet to acres	acres
Soil Vapor Wells Laydown yard and the Bulk Fuels Facility	600	1210	726000	not necessary	2.30E-05	16.7
Veteran Affairs Hospital Laydown yard	150	150	22500	not necessary	2.30E-05	0.5
EDB Biorecirculation Pilot Test Area	290	200	58000	not necessary	2.30E-05	1.3
TOTAL						**18.5**

Please see new Figure 1
with new and adjusted areas.

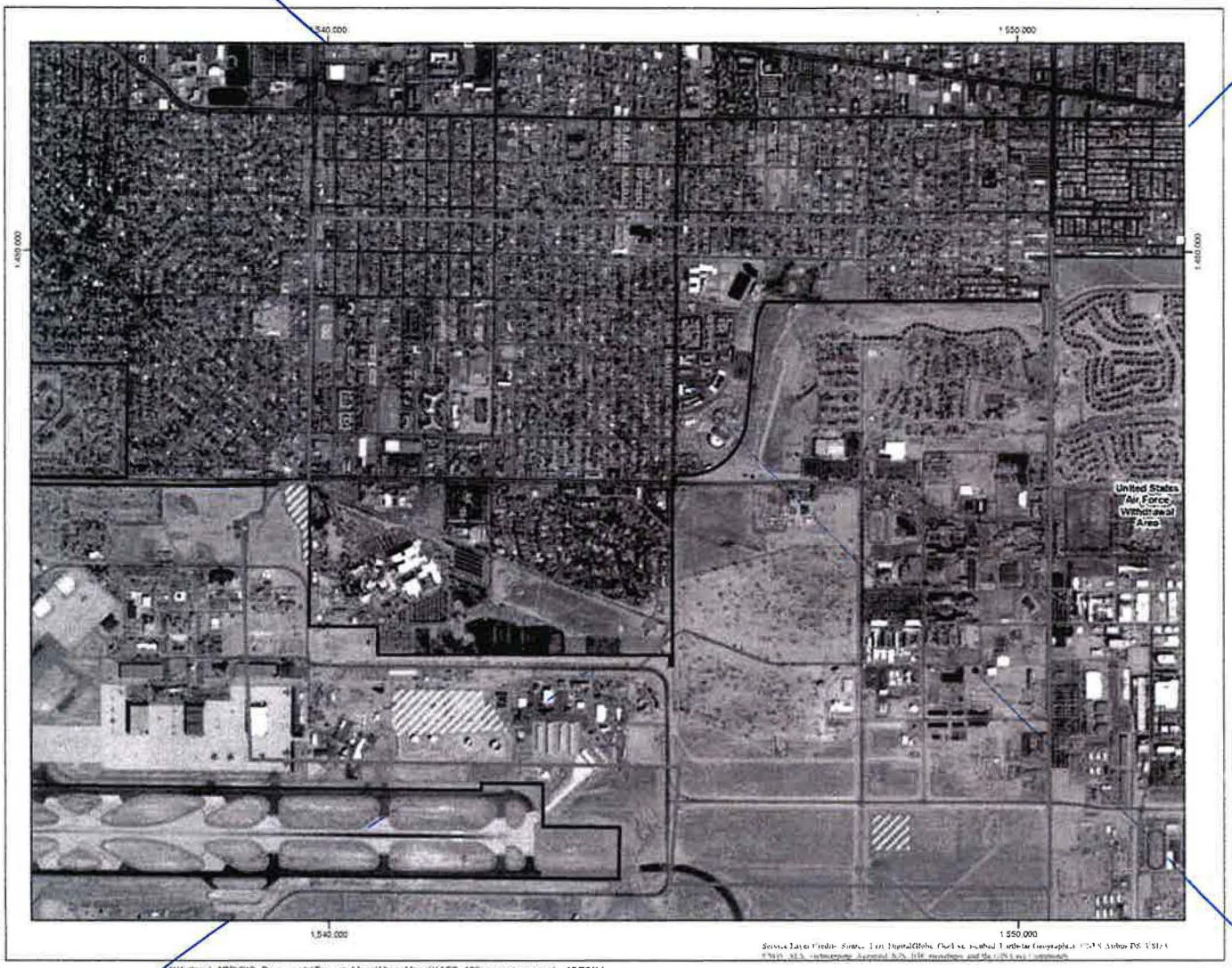

H:\Kirtland_AFB\GIS_Documents\Project_Maps\Misc_Maps\KAFB_109_operations.mxd 10/30/14

Legend

- Facility Boundry = 2000 Acres
- Groundwater Treatment System, Pipeline and Infiltration Gallery (15 Acres)
- Bulk Fuels Facility and SVE Laydown Yard (21 Acres)
- Gibson Laydown Yard (4 Acres)
- Veterans Affairs Hospital Laydown Yard (0.5 Acres)
- Kirtland Air Force Base Installation Boundary

~~Total Active Acres = 41 Acres~~

TSK
8/5/2016

Revision Date: 10/30/14

0 0.175 0.35 Miles

Projection: NAD83 State Plane New Mexico Central FIPS 3002 Feet

FIGURE 1

FACILITY BOUNDARY MAP
WITH ACTIVE OPERATION AREAS

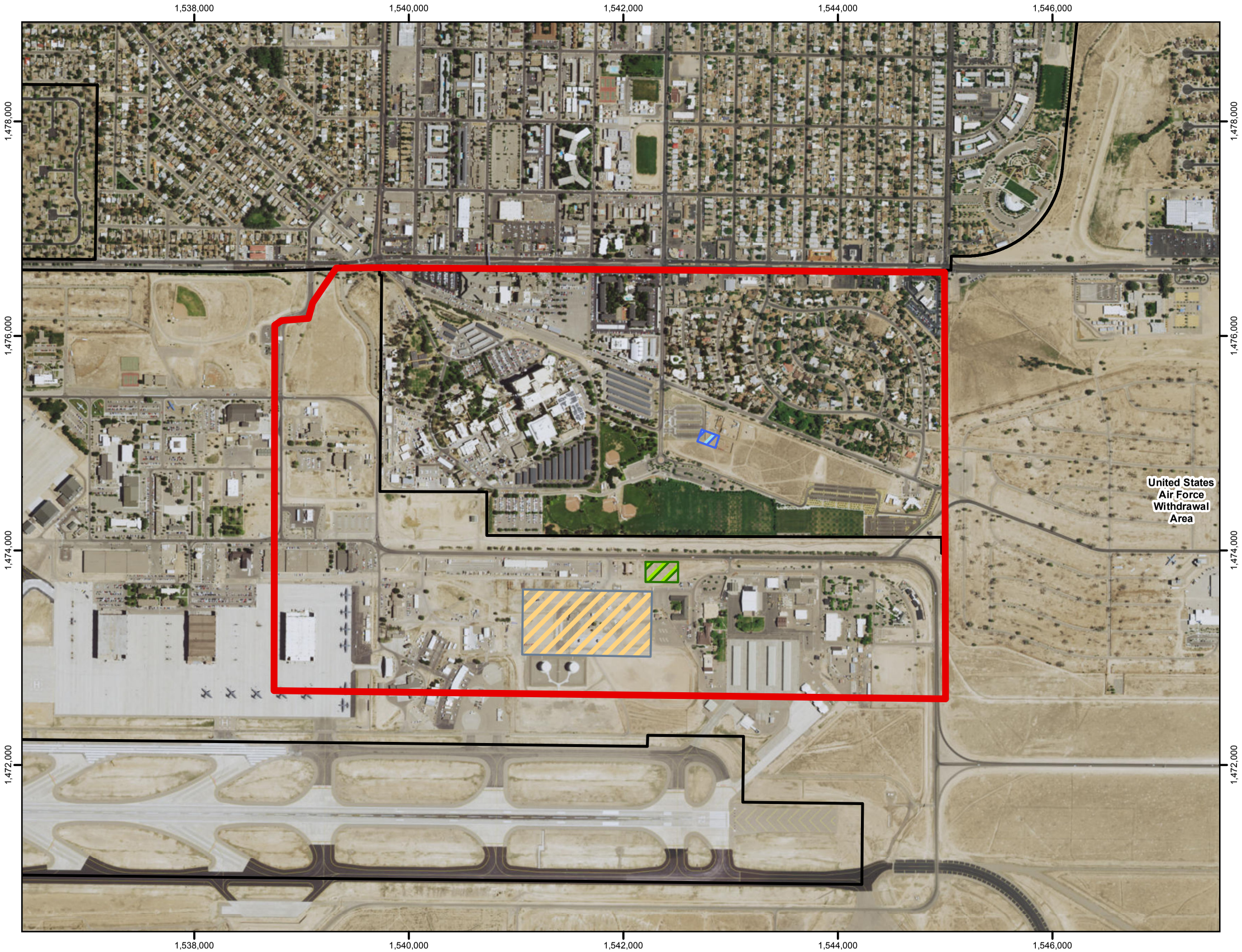

Service Layer Credits: Source: Esri, DigitalGlobe, GeoEye, Earthstar Geographics, CNES/Airbus DS, USDA, USGS, AEX, Getmapping, Aerogrid, IGN, IGP, swisstopo, and the GIS User Community

Legend

- Facility Boundary = 564 Acres
- Bulk Fuels Facility and SVE Laydown Yard (16.7 Acres)
- Veterans Affairs Hospital Laydown Yard (0.5 Acres)
- EDB Biorecirculation Pilot Test Area (1.3 Acres)
- Kirtland Air Force Base Installation Boundary

Total Active Acres = 18.5 Acres

N

Revision Date: 08/04/16

0 500 1,000 Feet

1 in = 1,000 feet

Projection : NAD83 State Plane New Mexico Central FIPS3002 Feet

FIGURE 1

FACILITY BOUNDARY MAP
WITH ACTIVE OPERATION AREAS

H:\Kirtland_AFB\GIS_Documents\Project_Maps\Misc_Maps\KAFB_109_operations.mxd 08/04/16

Siting

BASE CIVIL ENGINEER WORK REQUEST

(See Reverse for Instructions)

Form Approved
OMB No. 0704-0188

Public reporting burden for this collection of information is estimated to average .3 hours per response. Including the time for reviewing instructions, searching existing data sources, gathering and maintaining the data needed, and completing and reviewing the collection of information. Send comments regarding this burden estimate or any other aspect of this collection of information, including suggestions for reducing this burden to the Department of Defense, Washington Headquarters Services, Directorate for Information Operations and Reports, 1215 Jefferson Davis Highway, Suite 1204, Arlington, VA 22202-4302, and to the Office of Management and Budget, Paperwork Reduction Project 0704-0188, Washington DC 20503. Please DO NOT RETURN your form to either of these addresses. Send your completed form to HQ AFESC/DEMG.

SECTION I - TO BE COMPLETED BY REQUESTER

1. FROM *(Organization)*	2. OFFICE SYMBOL	3. DATE OF REQUEST	4. WORK REQUEST NO. *(For BCE Use)*
CB&I Federal Services LLC		08/03/2016	51659

5. NAME AND PHONE NO. OF REQUESTER	6. REQUIRED COMPLETION DATE	7. BUILDING, FACILITY OR STREET ADDRESS WHERE WORK IS TO BE ACCOMPLISHED
Tara Kunkel, 505-262-8906	08/31/16	empty lot on Randolph Rd, west of Air National Guard

8. DESCRIPTION OF WORK TO BE ACCOMPLISHED *(Include Sketch or Plan, when appropriate)*

A biorecirculation system has been designed to treat fuel related contamination near the Bulk Fuels Facility. CB&I respectfully requests the use of this area (please see Figure) for storage of a conex box that will house the recirculation system (shown in red) and to establish a less than 90-day RCRA hazardous waste storage area (labeled on Figure) as needed for storing groundwater associated with the extensive sampling required to monitor the success of this system. The conex box and less than 90-day area will remain at this site and in operation for approximately 18 months. The construction fence shown on the attached Figure is temporary and will only be required during active construction, approximately 6 weeks. To power this system, CB&I needs to tie-in to the existing electrical line that runs through the site (See Figure, electrical shown as a thin red line passing through the work site from east to west). CB&I will run new subsurface electrical lines to the conex box that will house the system and from the system to the extraction and injection wells that will be installed (see Figure for locations of proposed wells and utilities). OUT of CYCLE SITING REQUEST

9. BRIEF JUSTIFICATION FOR WORK TO BE ACCOMPLISHED *(Not required for maintenance and repair)*

The EDB bio-enhanced recirculation interim remedy pilot study is being implemented on Kirtland AFB as part of the effort to address groundwater contamination associated with the fuel leaks at the Bulk Fuels Facility. This interim remedy will help inform the selection of a final remedy to treat the aquifer contamination associated with the Bulk Fuels Facility.

received 8/4/16 ORIGINAL 332

10. DONATED RESOURCES

	FUNDS		LABOR		MATERIAL	X	CONTRACT BY REQUESTER		NONE

11. NAME OF REQUESTER	12. GRADE OF REQUESTER	13. SIGNATURE OF REQUESTER *(See Reverse of Form)*
Tara S Kunkel	Deputy Project Manager	

14. COORDINATION

JCC 11 Aug 16 377 ABW/SEG	377 MSG/CEC ENVIRONMENTAL MANAGEMENT	G. Harrison 377 MSG/CEIAP 11 Aug 2016	377 MSG/SCXP 11 AUG 2016	4 Aug 2016 377 MSG/CEFT

SECTION II - FOR BASE CIVIL ENGINEER USE

15. WORK ORDER *(Place an "X" in the appropriate box.)*

	IN-SERVICE		SELF-HELP		CONTRACT		SABER

16. DIRECT SCHEDULED WORK *(Place an "X" in the appropriate box.)*

	EMERGENCY		URGENT		ROUTINE		SELF-HELP		W/C

17. SELF-HELP *(Place an "X" in the appropriate box.)*

	BRIEFING REQUIRED		ADEQUATE COORDINATION		INSPECTION REQUIRED

SECTION III - COMPLETE ONLY IF WORK IS TO BE ACCOMPLISHED BY WORK ORDER

18. WORK CLASS	19. PRIORITY	20. ESTIMATED HOURS	21. ESTIMATED FUNDED COST	22. ESTIMATED TOTAL COST

	23. Memo from NEPA THERE IS NO NEED FOR AN ENVIRONMENTAL ASSESSMENT (AFR 19-2)		24. A WRITTEN ASSESSMENT IS BEING/HAS BEEN PROCESSED		25. APPROVED		26. DISAPPROVED
X							

27. REMARKS

SECTION IV - APPROVING AUTHORITY

28. NAME AND GRADE *(Please Type or Print)*	29. SIGNATURE	30. DATE

CONTINUATION SHEET
AF FM 332, 2014/06/18

27. REMARKS

DATE	ORGANIZATION	PRINT NAME	INITIALS
8/11/16	377 MSG/CETE ENVIRONMENTAL MANAGEMENT	Michelle Bore	MB

Following section(s) on attached Environmental Requirements Checklist apply. AQ3, HW1, HM1, SW3, WQ2/WQ3, NR5, CR3, M1, M4, M6

DATE	ORGANIZATION	PRINT NAME	INITIALS
11Aug2016	377 MSG/CEIAP-RP	Geneva Giannini	GG

1354 will be required

DATE	ORGANIZATION	PRINT NAME	INITIALS
24 August 2016	377 MSG/CENPP	Cheslea Farrell	CF

Siting will be approved via 332 approval.

DATE	ORGANIZATION	PRINT NAME	INITIALS

Work Order No: 51659
RCS No:
Dig Permit No:
MHMV No:

Kirtland AFB Checklist of Environmental Requirements for Proposed Project

	Air Quality Program – POC: Ms. Andria Cuevas @ 846-2522 or via e-mail: kirtlandairquality@us.af.mil
AQ 1	**Asbestos:** Due to the age of the building, asbestos-containing material (ACM) may be present. NO RENOVATION/DEMOLITION SHALL BEGIN PRIOR TO CE APPROVAL OF AF FORM 332 AND ASBESTOS SAMPLING, AS REQUIRED. If suspected ACM is encountered and will be disturbed, then asbestos abatement of the area to be renovated must be completed prior to starting the proposed work on the building. ***NOTE:*** NESHAP Notification to the AEHD in accordance with 20.11.20.22 NMAC is required for ACM disturbance. Additional guidance and forms can be found at the City of Albuquerque's website: http://www.cabq.gov/airquality/documents/AsbestosDemoRenoNoticationInstructionsandForm_2015.xls
AQ 2	**Lead Based Paint:** Due to the age of the building, LBP may be present, files are available for review. Contact Air Quality Program personnel to coordinate access to files. If suspected LBP is encountered and will be disturbed, LBP sampling should be performed by the contractor with abatement as necessary prior to commencing the proposed work on the building. ***Coordination/Consultation with Air Quality Program POC required.***
AQ 3	**Ground Disturbance:** • If the total ground disturbance is ***greater than or equal to ¾ acre***, then a Fugitive Dust Permit will be required. ***Fugitive Dust Permits must be submitted to the Air Quality Program for review***, and 377 ABW/CC signature, five (5) weeks prior to the anticipated start date of soil disturbance. ***NOTE:*** AEHD AQD requires all Fugitive Dust Permits be submitted to their office 10 business days prior to anticipated start date of soil disturbance and will require a site inspection prior to issuing the permit. • If the total ground disturbance is ***less than ¾ of an acre***, then a fugitive dust permit is not required; however, the contractor must still comply with the following general provisions from 20.11.20.12 NMAC: "Each person shall use reasonably available control measures or any other effective control measure during active operations or on inactive disturbed surface areas, as necessary to prevent the release of fugitive dust, whether or not the person is required by 20.11.20 NMAC to obtain a fugitive dust control permit. It shall be a violation of 20.11.20 NMAC to allow fugitive dust, track out, or transported material from any active operation, open storage pile, stockpile, paved or unpaved roadway, disturbed surface area, or inactive disturbed surface area to cross or be carried beyond the property line, right-of-way, easement or any other area under control of the person generating or allowing the fugitive dust if the fugitive dust may: (1) with reasonable probability injure human health or animal or plant life; (2) unreasonably interfere with the public welfare, visibility or the reasonable use of property, or (3) be visible for a total of 15 minutes or more during any consecutive one hour observation period using the visible fugitive dust detection method in 20.11.20.26 NMAC or an equivalent method approved in writing by the department. Failure to comply with 20.11.20.12 NMAC, a fugitive dust control permit, plan, term or condition shall be a violation of 20.11.20 NMAC. *NOTE: If any ground disturbance other than what is identified in the initial project is to occur, then you MUST re-coordinate with the Air Quality Program personnel prior to commencing work.*
AQ 4	**Boilers:** Natural gas boilers/hot water heaters of size greater than five (5) million BTU (MMBTU) require Stationary Source Air Permitting. If planning to install a boiler fueled by anything other than natural gas, contact Air Quality Program personnel immediately to determine if a permit is needed. If an air permit is required, the permit must be issued prior to purchase of the boiler(s) and can take up to seven (7) months to accomplish. The Air Quality Program is required to track boilers of all sizes/fuel types to comply with the basewide air permit (Title V Operating Permit). ***Coordination/Consultation with Air Quality Program POC required.***
AQ 5	**Refrigerant:** Ensure all equipment containing refrigerant and all HVAC technicians comply with the requirements in 40 CFR Part 82. If you hire an outside contractor, other than Chenega, you must: 1) maintain all invoices and work orders for work on refrigeration equipment for a minimum of 3 years; and 2) maintain an inventory of refrigeration equipment to include: make, model, serial number, refrigerant type, and total refrigerant charge in pounds.
AQ 6	**Generators:** All emergency generators are required to have a 20.11.41 NMAC construction permit from the Albuquerque Environmental Health Department (AEHD) Air Quality Division (AQD). The permit must be in place prior to "commencing construction", which means prior to purchasing the unit (20.11.41.7.C NMAC). It may take as long as 7 months from the initiation of the permit application preparation process to receive a permit from the AEHD AQD. The project is expected to pay for the cost of preparing the permit application and the associated AEHD AQD permit fees. The organization must plan to pay annual emission fee assessed by the AEHD AQD. Contact Air Quality Program personnel to discuss the timeline for the project. AFCEC approval of generator sizing and design is required prior to permitting. ***Coordination/Consultation with Air Quality Program POC required.***
AQ 7	**Building Renovation/Demolition:** If the building to be renovated/demolished is more than 75,000 cubic feet of space then a Fugitive Dust Permit will be required prior to renovation/demolition (***refer to AQ3 – first bulleted item***). An asbestos notification form must be submitted for all building renovation/demolition activities, even if no regulated ACM is present in the building or structure (***refer to AQ1***)
AQ 8	**Air Quality Permitting for New Sources:** An air quality permit from the AEHD AQD may be required for the proposed equipment prior to construction. ***Coordination with the Air Quality POC is required*** to ensure the appropriate measures are taken in the event the source must obtain an air quality permit. It may take as long as 7 months from the initiation of the permit application preparation process to receive a permit from AEHD AQD. The project is expected to pay for the cost of preparing the permit application and the associated AEHD air quality permit fees. The organization must also plan to pay emission fees for the permitted source on an annual basis.
AQ 9	**Permitting and/or Reporting Requirements Exist for Activity:** Activities require Open Burn/Open Detonation permitting through the City of Albuquerque **OR** there is requirement to report munition items expended during event. ***Prior Coordination with the Air Quality POC is required.***

effective: 25 April 2016
by Martha E. Garcia

	Hazardous Waste Program – POCs: Ms. Rebecca Clines and M Katrina Wheelock @ 846-2003 or via e-mail: kirtlandhazw e@ us.af.mil
HW 1	**Contracted Construction Projects:** All wastes generated must be characterized by the contractor. Any wastes characterized as Universal (lamps, batteries, etc.) or Hazardous must be properly disposed of by the contractor in accordance with (IAW) all federal and state regulations. Transformers, capacitors, and ballasts being removed/replaced must also be characterized and disposed of by the contractor IAW all federal, state, and local regulations. ***Ensure Scope of Work (SOW) and contract funding accurately account for these requirements.***
HW 2	**Self-Help / In-House Projects:** Any Universal (lamps, batteries, etc.) or Hazardous wastes generated must be properly characterized and disposed of IAW all federal and state regulations. Transformers, capacitors, and ballasts being removed/replaced must be characterized and disposed of in accordance with (IAW) all federal, state, and local regulations. Characterization may require fluid sampling. ***Contact the Hazardous Waste program prior to project start for guidance.*** Once project is complete, ***contact Hazardous Waste POCs for proper management of unused/unwanted materials (paints, sealants, etc.).***
HW 3	**TDYs:** Kirtland AFB manages the following items as hazardous waste: used oil, oily rags, rags contaminated with solvent, batteries, paint, sealants, etc. These items must be disposed of IAW federal, state, and local regulations. ***Contact 377 MSG/CEIE Hazardous Waste Program POCs 4 weeks prior to your TDY.***
HW 4	**New/Updated Mission Requirements:** Proposed new/updated activities may introduce or alter a waste stream. ***Contact the Hazardous Waste program to ensure wastes are properly characterized.***
	Hazardous Materials Program – POC: Program Manager: Ms. Lori Crump @ 846-8781 Program Support: Mr. Rickey Spence @ 846-2509 or via e-mail: 377msg@ s.af.mil
HM 1	Any hazardous materials used in the proposed project needs to be identified either by authorizing the material(s) under a shop in EESOH-MIS or by filling out, submitting, and following the guidelines in the short term contractor Memo and worksheet. Please turn in the worksheet, inventory list, and manufacture specific SDS(s) to the 377th MSG/CEIEC Hazardous Material program office or email to 377 MSG/CEIEC Hazardous Materials mail box. ***Please contact Hazardous Materials POCs for Memo and worksheet.***
HM 2	Any hazardous materials used in the proposed deployment need to be identified by filling out, submitting, and following guidelines in the deployment memo and worksheet. Please turn in the worksheet, inventory list, and manufacturer specific SDS(s) to the 377 MSG/CEIEC Hazardous Material program office or email to the 377 MSG/CEIEC Hazardous Materials mail box. ***Please contact Hazardous Materials POCs for Memo and worksheet.***
	Solid Waste/Recycling – POC: Program Manager: Ms. Katrina Wheelock @ 853-2486
SW 1	**Reporting:** Document weight/volume of all waste disposed, recycled, or salvaged off-base. Submit documentation to 377msg.ceanc.12@us.af.mil. ***Contact the Solid Waste/Recycling Program Manager for guidance.***
SW 2	**Furniture/Equipment Disposal:** ***Coordinate with DRMO (853-2269 or 846-6396)*** to establish whether furniture/equipment needs to be turned in. ***Contact your Unit Equipment Manager*** to remove equipment from supply/asset inventories prior to turning in or disposing. If disposal is authorized by DRMO and a roll-off is required, submit request on an AF Form 332.
SW 3	**Minor Construction/Demolition:** If using Kirtland AFB C&D Landfill for disposal, segregate scrap metal and corrugated cardboard for recycling at the landfill's recycling area. If a dumpster/roll-off is needed for recycling larger amounts of scrap metal or cardboard, submit request on an AF Form 332.
SW 4	**Major Construction/Demolition:** Ensure that Section 01 74 19 (Construction Waste Management, updated 06/2012) is included in project specifications.
SW 5	**Explosive Testing Debris:** Ensure test bed is cleared of any debris before next test. Only debris of a non-hazardous nature may be disposed of in the Kirtland AFB C&D Landfill. ***Proponent must maintain documentation that waste is non-hazardous, and provide to the Solid Waste/Recycling Program Manager upon request.***
	Restoration Program – POC: Chief of Env. Restoration: Mr. Wayne Bitner @ 853-3484
R1	Due to the potential for encountering Unexploded Ordnance (UXO), any fieldwork south of Hardin Blvd requires workers to complete UXO Awareness training. ***The 377 MSG/CED EOD Group can provide this short training. They can be contacted at 846-2229.***
R2	Impacts to Environmental Restoration Sites are possible. ***Please contact Restoration Program POC before doing any work.***
	Water Quality Program – POC's: Ms. Andria Cuevas @ 846-2522 and Ms. Rebecca Clines @ 846-2306
WQ 1	**Wastewater – Septic Tanks/Leach Fields:** When feasible, new construction and remodels should connect to the sanitary sewer system. If a new septic system is the only viable option, the septic tank and leach field must meet the requirements of the NMED Liquid Waste Bureau and be registered with the state. Consult the NMED Liquid Waste requirements concerning removal and/or demolition of a septic tank (20.6.2 NMAC http www nmcpr sta e nm us/nmac/ titles h n) ***Coordination/Consultation with Water Quality Program POCs required.***
WQ 2	**Water Discharge Activities - Municipal Separate Storm Sewer System (MS4) applies:** The MS4 permit requires al activities, regardless of size, to implement best management practices (BMPs) to ensure that storm water po utants are conta ned to the maximum extent practical and do not enter the storm drainage system (http wate epa gov polwas e/ pdes s p) Examp es of activities include: power washing of surfaces, minor construction, laydown yards or any activities drain ng to a storm dra n, etc Add tionally, a non-storm water discharges must be approved by the Water Quality Program **prior to discharge**, a l other non-storm water discharges are **prohibited**. ***Coordination/Consultation with Water Quality Program POCs required.*** *NOTE: If any ground disturbance other than what is identified in the initial project is o o , y o d at th the Water Quality Program personnel prior to commencing work.*

effective: 25 April 2016
by Martha E. Garcia

	***Water Quality Program** – POC's: Ms. Andria Cuevas @ 846-2522 and Ms. Rebecca Clines @ 846-2306*
WQ 3	**Land Disturbance Equal to or Greater than 43,560sqft (1 acre) – Construction General Permit (CGP) applies:** CGP applies to any individual project or series of projects/common development plans that cumulatively disturb one (1) acre. Contractors **must** develop a Storm Water Pollution Prevention Plan (SWP3), a draft Notice of Intent (NOI), and a detailed site map for approval by the Water Quality Program at least four (4) weeks prior to the contractor's submission of the approved NOI to the Environmental Protection Agency (EPA). Contractors **must** submit NOIs at least fourteen (14) calendar days prior to commencing ground disturbance (**Note**: 6 weeks total required). Ground disturbance **cannot** begin for fourteen (14) calendar days after EPA acknowledges receipt of the NOI (http://cfpub.epa.gov/npdes/stormwater/cgpenoi.cfm), or unless EPA delays or denies authorization. BMPs complying with the permit conditions **must** be in place before any ground disturbance commences. *Upon project completion,* Contractor **must** achieve final stabilization, in accordance with Part 2.2.2 and Part 9.4.1 of the CGP, prior to submitting a Notice of Termination (NOT) to the EPA and NMED. Contractor **must** comply with the NMED Surface Water Quality conditions specified in Part 9.4 of the CGP (20 6.4 NMAC, http://www.nmcpr.state.nm.us/nmac_titles.htm). ***Coordination/Consultation with Water Quality Program POCs required.***
WQ 4	**Facilities/Renovations with New Footprints Greater Than 5,000 gross sq ft - EISA, Section 438 applies:** The project footprint consists of all horizontal hard surfaces and disturbed areas, including both building area and pavements. The Energy Independence Security Act (EISA) requirements do not apply to internal renovations, maintenance, or resurfacing of existing pavements. Projects **must** conform to Air Force Sustainable Design and Development (SDD) guidance dated 2 June 2011 and the Unified Facilities Criteria (UFC-2-210-10). **Note: use of retention ponds is strictly prohibited.** Contractor **must** populate and validate the approved EISA spreadsheet prior to land disturbance. EISA estimated cost, written as a separate line-item of estimated cost, and final implementation cost **must** be documented in the DD 1391. ***Coordination with Water Quality Program POCs required.***
WQ 5	**Wastewater – Oil Water Separators, Grease and Sand Traps:** Equipment should only be installed at locations with an identified need and no feasible alternative. Design features and processes should be substantially reviewed prior to installation of equipment (include in DD 1391 if required). ***Coordination/Consultation with Water Quality Program POCs required.***
WQ 6	**Wastewater – Port-a-Potties:** For all projects/events, the contractor must anchor port-a-potties to prevent toppling of the unit. Al projects and events that will utilize gray (hand wash station) and black water (port-a-potties) systems must ensure that the contents are disposed of in accordance with local, state and federal laws. ***Coordination/Consultation with Water Quality Program POCs required.***
WQ 7	**Wastewater – Fire Suppression System Discharge:** Discharges from fire suppression systems utilizing chemical suppressants must be contained at the facility. Discharges of chemical suppressants to the environment or the sanitary sewer system are **prohibited** ***Coordination with Water Quality POCs required.***
WQ 8	**Section 404 Permit:** Any activities in or near the Tijeras or Coyote Arroyos may require a Section 404 Permit. ***Consultation with Water Quality POCs required.***
	***Tank Program** – POC: Mr. Dustin Akins @846-0226*
T1	**Transformers:** ***Please forward*** the make, model, transformer ID, location/building, and oil capacity (in gallons) for each new/replacement transformer being installed ***to Tank Program POC.***
T2	**Tanks – Above Ground Tanks (ASTs), Underground Tanks (USTs) and Generators:** ***Please forward*** the make, model, ID number, location/building, and storage capacity (in gallons) for all new and/or replacement oil storage tanks (including POLs, grease, fuels and generators) over 55 gals to ***Tank Program POC.*** All units over 55 gals must have secondary containment in case of spills/leaks. All USTs and tanks over 1,320 gals must be registered with the state.
	***Natural Resources Program** – POC: Ms. Erin Riley @ 846-0226*
NR 1	**Demolition of Buildings/Structures:** ***Contact Natural Resource POC*** to schedule a survey for bats, snakes, and nesting birds prior to demolition.
NR 2	**Removal/Trimming of Tree(s):** ***Contact Natural Resource POC*** to schedule a survey for bird nests prior to removal/trimming tree(s).
NR 3	**Outdoor Activities (Including Exterior Building/Structure Renovations):** ***Contact Natural Resource POC*** to schedule a survey for bird nests/animal issues prior to beginning work.
NR 4	**Replacement of Existing or Installation of New Power Poles:** Poles may need to be retrofitted to prevent bird electrocution. ***Contact Natural Resource Program POC*** to have the poles evaluated.
NR 5	**Trenching:** Potential exists for reptiles/amphibians/small mammals dropping into trenching projects and becoming trapped. Trenches require ramps at no more than 45 degrees so that trapped animals may exit the trench. ***Contact Natural Resource POC*** with questions.
	***Cultural Resources Program** – POC: Ms. Erin Riley @ 846-0226*
CR 1	Building/Structure is Historic; proposed work may indirectly impact historic properties (Area of Potential Effect). ***Please contact Cultural Resource POC before doing any work.***
CR 2	Impacts to Cultural Sites are possible. ***Please contact Cultural Resource POC before doing any work.***
CR 3	**Inadvertent Discovery of Buried Cultural Resources or Native American Human Remains and Objects:** If cultural resources are encountered inadvertently during an undertaking, work in the immediate vicinity shall be halted, the immediate vicinity of the resources shall be secured, and the Cultural Resource Program POC, shall be notified. The following procedures shall be followed: • An in situ evaluation of the resources shall be made by a qualified archaeologist. Based on recommendations from the archaeologist, decisions regarding the treatment of the resources shall be made in consultation with the Cultural Resources Manager (CRM) and the State Historic Preservation Officer (SHPO). • If the resources cannot be evaluated without further archaeological or historic work, the CRM shall be notified and a data recovery program or historic research shall be prepared in consultation with the SHPO. • Based on the results of the data recovery program or historic research, the resources shall be evaluated for eligibility to the National Register in consultation with the CRM and the New Mexico SHPO.

effective: 25 April 2016
by Martha E. Garcia

	MISCELLANEOUS
M1	**Ground Disturbance:** AF Form 103 required.
M2	**Project Requires Siting:** Contact Base Siting Office at 853-3747.
M3	**Tree Removal:** Personal use is not allowed. Please remove stumps and ensure trunks are no longer than 5 feet and/or 30 inches in diameter, if being taken to the Kirtland AFB Landfill for mulching. ***Coordination with Landfill Personnel required – Please call 846-5994 for further guidance.***
M4	**Disposal of Construction &Demolition (C&D) Waste at Kirtland C&D Landfill:** In order to gain access to the site, contractors must obtain a KAFB C&D Landfill Pass specific to each contract held for work on KAFB (multiple contracts = multiple passes). Note that a landfill pass establishes eligibility to use the facility; it does not guarantee disposal. Passes are issued Monday – Friday, 0730-1200. ***To obtain a Pass, contractors must bring all of the following items to the Landfill office:*** a) copy of the valid contract issued by a U.S. Government Contracting Agency for work to be accomplished on KAFB that requires use of the KAFB C&D Landfill; b) original, current vehicle registration(s); c) valid proof of insurance; and d) subcontractor appointment letter or contract (if applicable), showing subcontractor's performance period Contractor's signature to obtain a Pass indicates that contractor will control the waste stream such that only C&D generated on KAFB is disposed at the C&D Landfill (no municipal solid waste, no hazardous waste, no special waste, no off-base waste, etc.), and that contractor assumes full responsibility for proper disposal of any waste that may be rejected at the gate.
M5	**Activities on DOE Permitted Property:** DOE is responsible for adhering to all environmental laws and obtaining all applicable permits prior to commencing work. This includes conducting biological and cultural surveys as applicable. ***Please contact the DOE Environmental Office for further guidance.***
M6	**Environmental Management System (EMS) Awareness:** Kirtland AFB has a conforming EMS. All personnel, to include contractors need to be aware of the Environmental Commitment Statement found on the Kirtland AFB public website - http www.kirtland.af.mil/shared media document/AFD-140123-056.pdf. Contract work shall be consistent with the relevant policy and objectives identified in the Kirtland AFB EMS applicable to the contract. The Contractor shall ensure that employees are aware of environmental impacts and will mitigate those impacts by practicing pollution prevention techniques. ***Please contact the Kirtland AFB EMS Program Manager, Ms. Lori Crump @ 846-8781, with any questions.***
M7	**Spectrum Management Office (SMO):** All organizations on Kirtland AFB (includes incoming or TDY units and construction companies) that have radios (including walkie talkies), radars, sounders or a device that transmits radio frequencies must have a radio frequency license issued from the National Telecommunications and Information Administration (NTIA) or the Federal Communications Commission (FCC) prior to operation on the Installation. ***Organizations should contact the SMO to ensure that their devices are properly licensed prior to use, or, to request radio frequency assistance from the Installation Spectrum Managers. The SMO can be reached at (505) 853-3769/7426 or via email at 377ABW.SMO@us.af.mil.***
M8	DD1354 is required to capitalize improvements. ***Please submit document upon completion of project to the Real Property Office.***

Note: Listed requirements are subject to change for compliance with statutory/regulatory changes.

effective 25 April 2016
by Martha E. Garcia

STATE OF NEW MEXICO
OFFICE OF THE STATE ENGINEER

DISTRICT 1

TOM BLAINE, P.E.
NEW MEXICO STATE ENGINEER

5550 San Antonio Drive, N.E.
Albuquerque, NM 87109 (505) 383-4000

December 7, 2016

File No.: RG-1579

Kirtland Air Force Base
Attn: Wayne Bitner, Chief, Environmental Restoration
AFCEC/Kirtland AFB IST; Bldg 20685
2050 Wyoming Blvd, SE
Kirtland AFB, NM 87117-5270

RE: Permit No. RG-1579 POD316 through POD318

Greetings,

Your copy of the above numbered permit, which has been approved subject to the conditions set forth on the approval page, is enclosed.

Please review the Conditions of Approval for any required submittals. If submittals are not made by the date(s) indicated in the conditions, your rights under this permit are subject to expiration unless a request for an Extension of Time is received in the District Office of the State Engineer by that date, and that Extension of Time is subsequently approved.

Appropriate forms can be downloaded from the OSE website at www.ose.state.nm.us/WR/forms.php or will be mailed to you upon request.

Sincerely,

Christopher Burrus
Water Resource Specialist
Albuquerque, OSE, District 1

C: CB/cb

1-55400
150 cc
$

File No. RG-1579
POD 316 to POD 318

NEW MEXICO OFFICE OF THE STATE ENGINEER

APPLICATION FOR PERMIT TO CHANGE AN EXISTING WATER RIGHT
(Non 72-12-1)

(check applicable boxes):

For fees, see State Engineer website: http://www.ose.state.nm.us/

☒ Change Purpose of Use ☒ Groundwater ☐ Surface Water ☒ Change Place of Use ☒ Groundwater ☐ Surface Water	☐ Change Point of Diversion (POD): From: ☐ Groundwater ☐ Surface Water To: ☐ Groundwater ☐ Surface Water	☒ Additional Groundwater Point of Diversion (POD) ☐ Additional Surface Water Point of Diversion (POD)
☐ Temporary Change, NMSA 1978, § 72-12-7(B) Requested Start Date: (Not to Exceed 3 ac-ft in One Year) ☐ Water Use Lease, NMSA 1978, §§ 72-6-1 to-7 Requested Start Date:		Requested End Date: Requested End Date:

1. APPLICANT(S) (Required) Note: water-right owner must be listed as an applicant.

Name: **Kirtland Air Force Base**	Name: **N/A**
Contact or Agent: check here if Agent ☒ **Wayne Bitner**	Contact or Agent: check here if Agent ☐ **N/A**
Mailing Address: **Chief Environmental Restoration 2050 Wyoming Blvd SE**	Mailing Address: **N/A**
City: **Albuquerque**	City:
State: **NM** Zip Code: **87117-5270**	State: Zip Code:
Phone: **N/A** ☐ Home ☐ Cell Phone (Work): **505-853-3484**	Phone: ☐ Home ☐ Cell Phone (Work):
E-mail (optional): **Ludie.Bitner@us..af.mil**	E-mail (optional):

STATE ENGINEERS OFFICE
ALBUQUERQUE, NEW MEXICO
2016 AUG 25 AM 10: 01

2. CURRENT OSE FILE INFORMATION (Required)

OSE File No(s): **RG-1579 THROUGH RG-1589**	Priority Date (if known):	Subfile/Cause No. (if applicable):

3. CURRENT PURPOSE OF USE AND AMOUNT OF WATER (Required)

☐ Domestic ☐ Livestock ☐ Irrigation ☐ Municipal ☐ Industrial ☐ Commercial ☒ Other Use (specify): **Pollution Control and Recovery** Describe a specific use If applicable (i.e. sand & gravel washing, dairy etc): **Extraction and injection of groundwater for remediation**	Amount of Water (acre-feet per annum): If more details are needed, type "See Comments" in "Other" field below, and explain in Additional Statements Section. Diversion: **up to 80** Consumptive Use: **None** Other (include units): **See Comments**

FOR OSE INTERNAL USE

Application for Permit, Form wr-06, Rev 9/26/12

File No.: RG-1579	Trn. No.:	Receipt No.:
Trans Description (optional): POD 316-318		Sub-Basin:
PCW/LOG Due Date:	PBU Due Date:	

4. COUNTY WHERE WATER RIGHT IS CURRENTLY USED (Required)

Bernalillo

5. ADDITIONAL STATEMENTS CONCERNING THE CURRENT WATER RIGHT

Extraction wells KAFB-106EX1 and KAFB-106EX2 and injection well KAFB-106IN1 will be supplimental to the wells described in Kirtland AFB file No. RG 1579 through RG-1589. The application does not request to increase the allowable groundwater diversion described in RG-1579 through 1589, but seeks to change the purpose of use to pollution control and recovery, and by adding places of use not currently described in water rights RG-1579 through RG-1589. The amount of groundwater removed from the two extraction wells (50 gpm, or 80 acre-feet per year) will be injected into KAFB-106IN1 at a rate of 50 gpm (80 acre-feet per year), so there is no consumptive use.

6. CURRENT or MOVE-FROM POINT(S) OF DIVERSION (POD) (Required)

☐ **Surface POD** OR ☒ **Ground Water POD (Well)**

Name of ditch, acequia, or spring:

Stream or water course: | Tributary of:

If application proposes a new point of diversion involving a diversion dam, storage dam, main canal, and/or pipeline, complete Attachment 2. ☐ Check here if Attachment 2 is included in this application packet.

POD Location Required: Coordinate location must be reported in NM State Plane (NAD 83), UTM (NAD 83), or Latitude/Longitude (Lat/Long - WGS84).
District II (Roswell) & District VII (Cimarron) customers, provide a PLSS location in addition to above.

☒ NM State Plane (NAD83) (Feet)
☐ NM West Zone
☐ NM East Zone
☒ NM Central Zone

☐ UTM (NAD83) (Meters)
☐ Zone 12N
☐ Zone 13N

☐ Lat/Long (WGS84) (to the nearest 1/10th of second)

POD Number (if known):	X or Easting or Longitude:	Y or Northing or Latitude:	Provide if known: -Public Land Survey System (PLSS) (*Quarters or Halves , Section, Township, Range*) OR - Hydrographic Survey Map & Tract; OR - Lot, Block & Subdivision; OR - Land Grant Name
KAFB-106EX1	1542418.47	1473782.33	
KAFB-106EX2	1542254.00	1473837.97	
KAFB-106IN1	1542331.87	1473810.39	

STATE ENGINEERS OFFICE
ALBUQUERQUE, NEW MEXICO
2016 AUG 25 AM 10: 04

NOTE: If more PODS need to be described, complete form WR-08 (Attachment 1 – POD Descriptions)
Additional point of diversion descriptions are attached: ☐ Yes ☒ No **If yes, how many**_____

Point of Diversion is on Land Owned by: **Kirtland Air Force Base**

Other description relating point of diversion to common landmarks, streets, or other: **The two extraction wells and one injection well will be located on Kirtland Air Force Base, just south of Randolph Road SE, between Fuels Drive and Air Guard Drive SE.**

FOR OSE INTERNAL USE

Application for Permit, Form wr-06

File Number: RG-1579 POD 3/6-3/8 | Trn Number:

7. CURRENT or MOVE-FROM PLACE(S) OF USE (Required)

The land is legally described by (check all that apply):

☒ Public Land Survey System (PLSS) (quarters, section, township, range)

☐ Irrigation or Conservation District Map

☐ Hydrographic Survey Report or Map

☐ Subdivision

☐ Grant

Complete the blocks below for all tracts of land (more than one description can be provided for a tract if available):

PLSS Quarters or Halves, **and/or** Name of Hydrographic Survey, **and/or** Name of Irrigation or Conservation District, **and/or** Name and County of Subdivision **and/or** Grant	PLSS Section **and/or** Map No. **and/or** Lot No.	PLSS Township **and/or** Tract No. (Please list each tract individually) **and/or** Block No.	PLSS Range	Acres	Priority
RG-1579	**36**	**10N**	**3E**		
			Total Acres:		

STATE ENGINEERS OFFICE
ALBUQUERQUE, NEW MEXICO
2016 AUG 25 AM 10: 04

Other description relating place of use to common landmarks, streets, or other: **Kirtland AFB as described in District Court order: United States District Court, District of New Mexico, State of New Mexico State Engineer vs. Kirtland Air Force, dated November 27, 1973. Court order is included as Attachment 2.**

Place of use is on land owned by (required): **Kirtland Air Force Base**

Are there other sources of water for these lands? No ☒ Yes ☐ describe by OSE file number:

Note: If on Federal or State Land, please provide copy of lease.

8. MOVE-TO PURPOSE OF USE AND AMOUNT OF WATER (Complete this section ONLY if the purpose of use is changing)

☐ Domestic ☐ Livestock ☐ Irrigation ☐ Municipal ☐ Industrial ☐ Commercial ☒ Other Use (specify): **Pollution Control and Recovery** Describe a specific use If applicable (i.e. sand & gravel washing, dairy etc): **Extraction and injection of GW for remediation**	Amount of Water (acre-feet per annum): If more details are needed, type "See Comments" in "Other" field below, and explain in Additional Statements Section. Diversion: **up to 80** Consumptive Use: **None** Other (include units): **See Comments**

9. MOVE-TO POINT(S) OF DIVERSION (POD) (Complete this section ONLY if adding or replacing a POD)

☐ **Surface POD** OR ☒ **Ground Water POD (Well)**

Name of ditch, acequia, or spring:

Stream or water course: | Tributary of:

If application proposes a new point of diversion involving a diversion dam, storage dam, main canal, and/or pipeline, complete Attachment 2. ☐ Check here if Attachment 2 is included in this application packet.

POD Location Required: Coordinate location must be reported in NM State Plane (NAD 83), UTM (NAD 83), or Latitude/Longitude (Lat/Long - WGS84).
District II (Roswell) & District VII (Cimarron) customers, provide a PLSS location in addition to above.

☒ NM State Plane (NAD83) (Feet)
☐ NM West Zone
☐ NM East Zone
☒ NM Central Zone

☐ UTM (NAD83) (Meters)
☐ Zone 12N
☐ Zone 13N

☐ Lat/Long (WGS84) (to the nearest 1/10th of second)

POD Number (if known):	X or Easting or Longitude:	Y or Northing or Latitude:	Provide if known: -Public Land Survey System (PLSS) (*Quarters or Halves , Section, Township, Range*) OR - Hydrographic Survey Map & Tract; OR - Lot, Block & Subdivision; OR - Land Grant Name
KAFB-106EX1 POD 316	1542418.47	1473782.33	
KAFB-106EX2 POD 317	1542254.00	1473837.97	
KAFB-106IN1 POD 318	1542331.87	1473810.39	

STATE ENGINEERS OFFICE ALBUQUERQUE, NEW MEXICO 2016 AUG 25 AM 10: 04

NOTE: If more PODS need to be described, complete form WR-08 (Attachment 1 – POD Descriptions)
Additional POD descriptions are attached: ☐ **Yes** ☒ **No** **If yes, how many**_____

Other description relating point(s) of diversion to common landmarks, streets, or other: **The two extraction wells and one injection well will be located on Kirtland Air Force Base, just south of Randolph Ave SE, between Fuels Drive and Air Guard Drive SE.**

Point of Diversion is on Land Owned by: **Kirtland Air Force Base**

Note: The following information is for wells only. If more than one (1) well needs to be described, provide attachment.

Approximate depth of well (feet): **510.00**	Outside diameter of well casing (inches): **6.00**
Driller Name: **NA**	Driller License Number: **NA**

FOR OSE INTERNAL USE

Application for Permit, Form wr-06

File Number: RG-1579 POD 316-318	Trn Number:

If replacing the current well, is the current well to be plugged? ☐ Yes ☐ No ☒ Not Applicable

If No, state for what use it is retained:

STATE ENGINEERS OFFICE
ALBUQUERQUE, NEW MEXICO
2016 AUG 25 AM 10: 04

10. MOVE-TO PLACE(S) OF USE **(Complete this section ONLY if adding or changing a place of use)**
List each individually

The land is legally described by (check all that apply):

☒ Public Land Survey System (PLSS) (quarters, section, township, range)
☐ Irrigation or Conservation District Map
☐ Hydrographic Survey Report or Map
☐ Subdivision
☐ Grant

Complete the blocks below for all tracts of land (more than one description can be provided for a tract if available):

PLSS Quarters or Halves, **and/or** Name of Hydrographic Survey, **and/or** Name of Irrigation or Conservation District, **and/or** Name and County of Subdivision **and/or** Grant	PLSS Section **and/or** Map No. **and/or** Lot No.	PLSS Township **and/or** Tract No. (Please list each tract individually) **and/or** Block No.	PLSS Range	Acres	Priority
SW 1/4	**36**	**10N**	**3E**		
			Total Acres:		

Other description relating place of use to common landmarks, streets, or other: **The two extraction wells and one injection well will be located on Kirtland Air Force Base, just south of Randolph Ave SE, between Fuels Drive and Air Guard Drive SE.**

Place of use is on land owned by (required): **Kirtland Air Force Base**

Are there other sources of water for these lands? No ☒ Yes ☐ describe by OSE file number:

Note: If on Federal or State Land, please provide copy of lease.

STATE ENGINEERS OFFICE
ALBUQUERQUE, NEW MEXICO
2016 AUG 25 AM 10: 04

11. ADDITIONAL STATEMENTS OR EXPLANATIONS

This application seeks to use wells KAFB-106EX1, KAFB-106EX2, and KAFB-106IN1 for a temporary pilot recirculation system supplemental to the Kirtland AFB water rights (RG-1579 through 1589). The application does not request to increase the allowable groundwater diversion described in RG-1579 through RG-1589, but seeks to change the purpose of use to pollution control and recovery, and by adding places of use not currently described in water rights RG-1579 through RG-1589. The two extraction wells will extract groundwater up to 40 acre feet per year (25 gpm) per well (80 acre feet per year total), and the injection well will recirculate amended groundwater at a rate of up to 50 gpm for approximately one year.

ACKNOWLEDGEMENT

I, We (name of applicant(s)), **Eric H. Froehlich**, COLONEL, USAF, 377 ABW COMMANDER
Print Name(s)

affirm that the foregoing statements are true to the best of (my, our) knowledge and belief.

Applicant Signature

Applicant Signature

ACTION OF THE STATE ENGINEER

This application is:

☑ approved ~~☐ partially approved~~ ~~☐ denied~~

provided it is not exercised to the detriment of any others having existing rights, and is not contrary to the conservation of water in New Mexico nor detrimental to the public welfare and further subject to the attached conditions of approval.

STATE ENGINEERS OFFICE
ALBUQUERQUE, NEW MEXICO
2016 AUG 25 AM 10: 04

Witness my hand and seal this 1 day of December 20 16, for the State Engineer,

Tom Blaine, P.E.
State Engineer, State Engineer

By: Signature

CHRISTOPHER BURRUS
Print

Title: Water Resource Specialist
Print

FOR OSE INTERNAL USE

Application for Permit, Form wr-06

File Number: RG-1579 RED3/6-3/8	Tm Number:

CONDITIONS OF APPROVAL

1. This application is approved as follows:

Permittee:	Kirtland Air Force Base
Permit No:	RG-1579 POD316 through POD318
Application File Date:	August 25, 2016
Notice for Publication Issued:	September 7, 2016
Affidavit of Publication Filed:	October 6, 2016, The Albuquerque Journal published on September 12, 19, and 26, 2016
Priority:	March 1, 1949 through March 6, 1956
Source:	Groundwater

Point of Diversion:

RG-1579 POD316:	(KAFB-106EX1) Located at a point where X=1,542,418.47 feet and Y=1,473,782.33 feet, NAD 83, SPCS, Central Zone, on land owned by Kirtland Air Force Base, Bernalillo County, New Mexico.
RG-1579 POD317:	(KAFB-106EX2) Located at a point where X=1,542,254.0 feet and Y=1,473,837.97 feet, NAD 83, SPCS, Central Zone, on land owned by Kirtland Air Force Base, Bernalillo County, New Mexico.
RG-1579 POD318:	(KAFB-106IN1) Located at a point where X=1,542,331.87 feet and Y=1,473,810.39 feet, NAD 83, SPCS, Central Zone, on land owned by Kirtland Air Force Base, Bernalillo County, New Mexico.
Purpose of Use:	Pollution Control and Recovery; Extraction from RG-1579 POD 316 and RG-1579 POD317, and Injection into RG-1579 POD318
Place of Use:	within the SW¼, Section 36, Township 10 North, Range 3 East, New Mexico Principal Meridian, Bernalillo County, New Mexico.

2. The total diversion of water from wells RG-1579 POD316, RG-1579 POD317, and RG-1579 POD318 under this permit shall not exceed 80 acre-feet per annum consumptive use.

3. The new wells shall be drilled by a well driller licensed in the State of New Mexico, and a well record for new wells RG-1579 POD316, RG-1579 POD317, and RG-1579 POD318 shall be filed with the Office of the State Engineer within twenty (20) days of drilling the well.

4. Wells RG-1579 POD316, RG-1579 POD317, and RG-1579 POD318 shall be equipped with a totalizing meter of a type, at location(s) approved by, and installed in a manner acceptable to the State Engineer. Records of the amount of water pumped and injected shall be submitted, in writing, to the District 1 Office of the State Engineer on or before the 10th day of each month. No water shall be diverted from any well unless equipped with a functional totalizing meter. The Permittee shall provide in writing the make, model, serial number, date of installation, initial reading, units, and dates of recalibration of each meter and any replacement meter.

5. The Permittee shall utilize the highest and best technology to ensure conservation of water to the maximum extent practical.

6. This Permit will expire on December 1, 2025.

7. The State Engineer retains jurisdiction over this permit.

8. Pursuant to Section 72-8-1 NMSA, the permittee shall allow the state engineer and his representative's entry upon private property for the performance of their respective duties, including access to the wells for meter readings and water level measurements.

Witness my hand and seal this 7 day of December, A.D., 2016

Tom Blaine, P.E.
NEW MEXICO STATE ENGINEER

By: _____

Christopher Burrus
Water Resource Specialist
District I
CB:cb
cc: WRAB

FIGURE 1
PROPOSED WELL LOCATIONS

STATE ENGINEERS OFFICE
ALBUQUERQUE, NEW MEXICO
2016 AUG 25 AM 10: 04

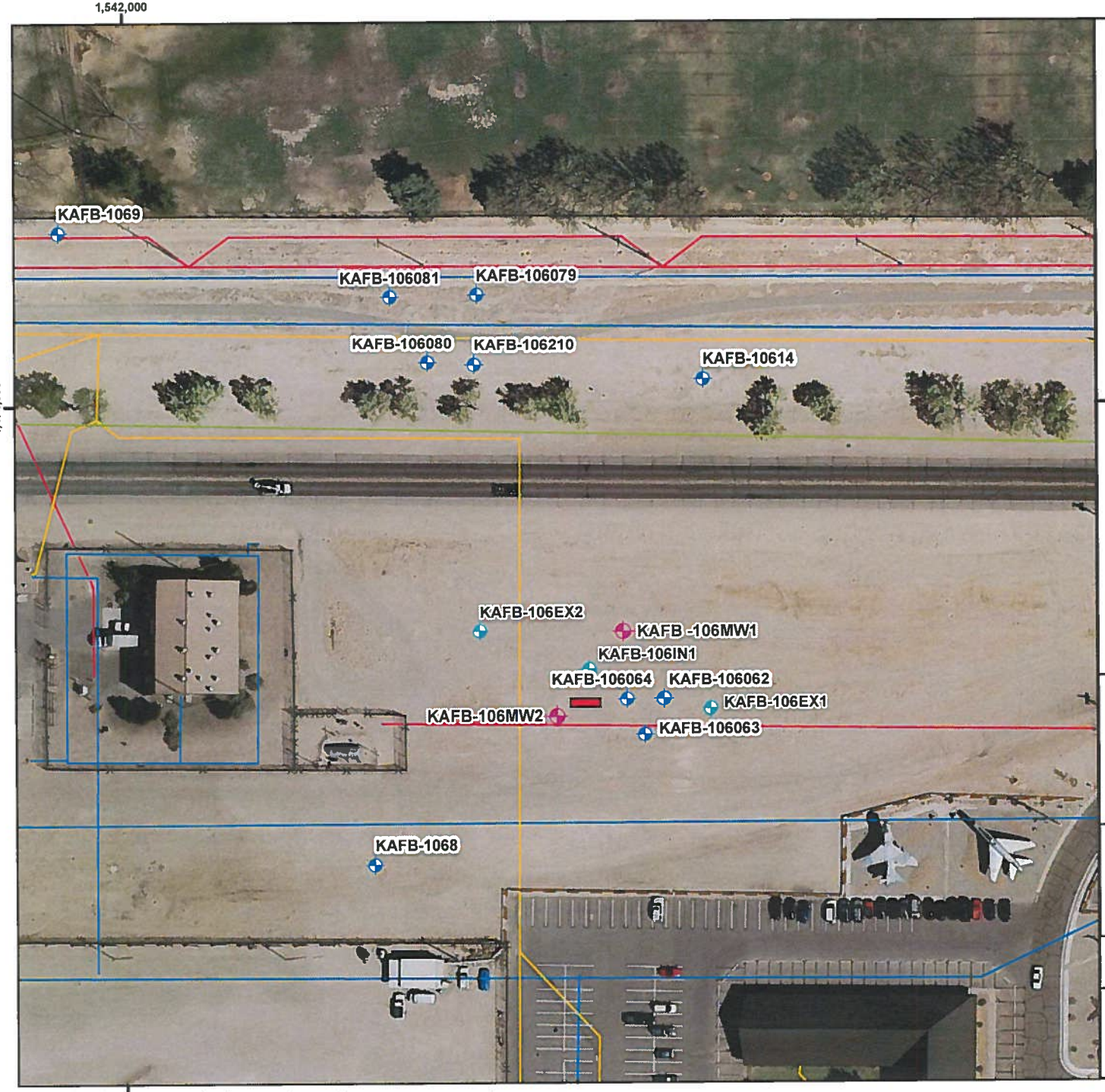

Legend

- Monitoring Well
- Pilot Test Monitoring Well
- Pilot Test Injection/Extraction Well
- Wall Line
- Fence Line
- Natural Gas Line
- Wastewater Line
- Water Line
- Eelctrical Cable Line
- Conex Box

STATE ENGINEERS OFFICE
ALBUQUERQUE, NEW MEXICO
2016 AUG 25 AM 10: 04

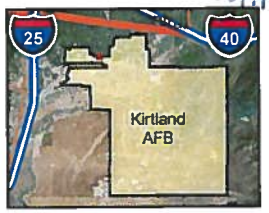

SITE LOCATION

Revision Date: 06/08/16

N

0 25 50 100

Feet

1 inch = 100 feet

Projection : NAD83 State Plane New Mexico Central FIPS3002 Feet

FIGURE 1

WELL LOCATION MAP

H:\Kirtland_AFB\GIS_Documents\Project_Maps\ESTCP\KAFB_ESTCP003_location.mxd 06/08/16

ATTACHMENT I
WELL SUMMARY

STATE ENGINEERS OFFICE
ALBUQUERQUE, NEW MEXICO
2016 AUG 25 AM 10: 04

KIRTLAND AIR FORCE BASE
BULK FUELS FACILITY
WELL SUMMARY

ESTCP Extraction and Injection Wells

Extraction and injection wells will be installed in accordance with the Ethylene Dibromide Recirculation Pilot Test Work Plan (CB&I, 2016). KAFB-106EX1 and KAFB-106EX2 will be used as extraction wells, and KAFB-106IN1 will be used as an injection well for recirculated groundwater and amendment injection. The two extraction wells will be located approximately 90 feet upgradient and downgradient from the single injection well, respectively, and will be used to periodically recirculate groundwater during individual phases of the recirculation pilot test. Groundwater will be extracted from each extraction well at a rate of up to 25 gallons per minute, and injected into KAFB-106IN1 at a rate of up to 50 gallons per minute.

Both the extraction and injection wells will be dilled using Air Rotary Casing Hammer (ARCH) and will be constructed within a 11 ¾ -inch borehole. The wells will be constructed using 6-inch diameter, PVC flush threaded riser pipe and equipped with a 0.040-inch slot stainless steel wire wrap screen with a 5-foot PVC sump (6-inch diameter), and flush threaded bottom cap. For the injection well (KAFB-106IN1), the 20-foot screen will be installed with the top of screen at static groundwater level and extend to 20-feet below static water level (groundwater is approximately 480 feet below ground surface; consequently the screen may extend from 480 to 500 feet below ground surface). To minimize aeration of extracted water, the two extraction wells will be installed with 20-foot screens, the top of which will be located 5 feet below the static groundwater level (groundwater is approximately 480 feet below ground surface; consequently the screen may extend from 485 to 505 feet below ground surface). Following placement of the well screen and riser pipe, filter pack (sand) will be placed adjacent to the well screen followed by a fine sand seal and bentonite chip seal. A cement/bentonite grout will extend from the bentonite chip seal to near ground surface. The bentonite chip seal will be hydrated in lifts using a "clean" water source. Details of well construction are described below.

STATE ENGINEERS OFFICE
ALBUQUERQUE, NEW MEXICO
2016 AUG 25 AM 10:16

- The target depth of the well will be re-assessed before drilling using groundwater levels from off-setting wells to project groundwater level at the selected boring location. Currently, depth to static groundwater level is 480-feet below ground surface. If groundwater is encountered during drilling at a shallower depth, then drilling will be stopped temporarily, and the hole will be allowed to equilibrate for approximately 1 hour to determine the water table elevation.

- If the boring is over drilled beyond the bottom of the proposed sump elevation by more than 10 feet, the borehole will be backfilled with filter pack material to an elevation approximately 5 feet below the proposed bottom of sump elevation.

- At the completion drilling and before well construction, a borehole deviation measuring device will be used to log the borehole. The device may be similar to the Reflex EZ-Shot (Single Shot) Deviation Tool or other acceptable device. The results will be used to assess borehole deviation, which is limited to a total of 5 feet or less over the 505 or 510 foot depth of the borehole.

- The wells will be constructed within the borehole using a 5-foot PVC sump and flush threaded cap; flush-threaded stainless steel wire wrap screen with a 0.040-inch slot; and 6-inch PVC riser pipe to the top of the well stick-up (approximately 485 feet). The sump will extend 5 feet below the bottom of the screened interval. Centralizers will be placed just below the screen and just above the screen.

- Once the well string is emplaced inside the driven casing, the 10/20 sand filter pack will be installed in the annular space between the well string and the borehole from the total depth of the bore hole to 10 feet above the top of screen. The filer pack will be emplaced by filling the annulus between the well string and outer driven casing using a treme pipe, then slowly extracting the driven casing, allowing the volume of filter pack to fill the annulus between the well string and the borehole wall. This will be done incrementally in 10-foot lifts, never allowing the screen to be directly exposed to the formation. During this process the screen interval will be gently surged between lifts to insure filter pack placement with no voids.

- A 10-foot hydrated bentonite seal will be emplaced above the sand filter pack, incrementally hydrated with potable water in 1-foot lifts. The seal will be allowed to hydrate for 30 minutes after the last lift is emplaced.

- A high solids (20 wt%) bentonite grout will be emplaced by tremie pipe to within 30 feet of the surface. The bentonite grout will be installed in lifts (approximately 70 feet thick) to prevent collapse of the PVC casing.

- To the ground surface, a cement/bentonite grout mixture will be installed over the high-solids bentonite grout using a tremie pipe. The mixture will consist of 94 pounds of Portland cement to gallons of approved water and 3 percent by weight of sodium bentonite powder.

- The wells will be finished below grade, in a fiberglass well vault approximately 4' by 6' by 4' in size.

STATE ENGINEERS OFFICE
2017 AUG 25 AM 8:00
ALBUQUERQUE, NEW MEXICO

As summarized above, both injection and extraction wells will be installed in a similar manner. However, injection well will require the installation of 1.5-inch black steel injection pipe, a Baski flow control valve and associated controls, and a transducer to monitor injection levels. Additionally a 1-inch flush threaded Sch. 40 PVC pipe will be installed to allow access for collection of groundwater level measurements. A sanitary seal will be used to secure the injection pipe, power cable, Baski Valve controls, access drop pipe, and transducer. The injection pipe will extend from the well seal to approximately the mid-point of the screen interval (490 feet bgs); this is where the Baski valve will be set.

The injection pipe will be composed of 60 feet of 1.5 inch fusion bonded epoxy (FBE) coated steel NPT threaded discharge pipe from the valve to above the water table, coupled to 1.5 inch black carbon steel pipe to the surface. Couples will be black carbon steel on the black carbon steel pipe. The injection pipe will be suspended from the surface and centralizers will be used to center and stabilize the tubing during injection. The injection pipe will connect to the Baski flow control valve, below which will be a Grundfos pump. A flow meter and totalizer (volumes will be measured in gallons) will be used measure the injection rate and volume of groundwater entering the injection well.

References

CB&I. 2016. *Ethylene Dibromide Recirculation Pilot Test Work Plan*. Prepared by CB&I Federal Services. Draft. July.

USACE. 2011. *Groundwater Investigation Work Plan, Bulk Fuels Facility (BFF) Spill, Solid Waste Management Units ST-106 and SS-111, Kirtland Air Force Base, Albuquerque, New Mexico.* Prepared by Shaw Environmental & Infrastructure, Inc. for the USACE Albuquerque District under USACE Contract No. W912DY-10-D-0014, Delivery Order 0002. March.

ATTACHMENT 2
KIRTLAND WATER RIGHT

STATE ENGINEERS OFFICE
ALBUQUERQUE, NEW MEXICO
2016 AUG 25 AM 10: 04

73 DEC 3 A 8:26
ALBUQUERQUE, N. MEX.

IN THE UNITED STATES DISTRICT COURT

DISTRICT OF NEW MEXICO

STATE OF NEW MEXICO, ex rel, S. E. REYNOLDS, State Engineer.	)
Plaintiff	)
vs.	)
JOHN McLUCAS, Secretary of the Air Force, THOMAS W. MORGAN, Commander, Air Force Special Weapons Center, and JAMES B. MYERS, Base Commander, Kirtland Air Force Base	)
Defendants.	)

ORIGINAL
FILED IN MY OFFICE
NOV 27 1973
L. C. KANALY
CLERK

STATE ENGINEERS OFFICE
ALBUQUERQUE, NEW MEXICO
2016 AUG 25 AM 10:05

JUDGMENT AND ORDER

THIS MATTER coming on to be heard upon the Stipulation of the parties, and the Court having considered the same and being otherwise fully advised in the premises, finds that the Court has jurisdiction of the parties and the subject matter and that the said Stipulation should be approved and incorporated in the final judgment of this Court.

IT IS THEREFORE ORDERED, ADJUDGED AND DECREED that the Stipulation of the parties is hereby approved and incorporated in this judgment as if set out in full herein.

IT IS FURTHER ORDERED that the defendants, their employees, agents, assigns and successors in interest be and they are hereby permanently enjoined and restrained from any diversion and/or use of water from the Rio Grande Underground Water BAsin in and for Kirtland Air Force BAse except in strict conformity with this final judgment.

HOWARD BRATTON

JUDGE OF THE U. S. DISTRICT COURT

i. general;
PLS
J Grant

IN THE UNITED STATES DISTRICT COURT

DISTRICT OF NEW MEXICO

73 DEC 3 A 8:
ALBUQUERQUE, N.M.
ORIGINAL FILED IN MY OFFICE
NOV 27 1973
L. G. KANALY
CLERK

STATE OF NEW MEXICO, ex rel, S. E. REYNOLDS, State Engineer.	)
Plaintiff	)
vs.	)
JOHN McLUCAS, Secretary of the Air Force, THOMAS W. MORGAN, Commander, Air Force Special Weapons Center, and JAMES B. MYERS, Base Commander, Kirtland Air Force Base	)
Defendants.	)

STIPULATION

COME NOW the Plaintiff and Defendants herein, by and through their attorneys, and hereby mutually stipulate and agree that final judgment may enter in this cause in the following terms:

1. The United States of America, acting through and by means of the United States Air Force, owns and operates that certain complex of military facilities known as Kirtland Air Force Base within Bernalillo County, New Mexico, which Base includes the former Sandia Base, a Military installation heretofore operated by the United States Army. That area heretofore known as Sandia Base shall be designated in this stipulation as Kirtland East and that area known as Kirtland Air Force Base prior to the merger of the two installations shall be designated as Kirtland West.

2. On November 29, 1956, the Plaintiff, S. E. Reynolds, State Engineer, duly and lawfully declared the Rio Grande Underground Water Basin, an underground reservoir of public waters of the State of New Mexico having reasonably ascertainable boundaries.

STATE ENGINEERS OFFICE
ALBUQUERQUE, NEW MEXICO
2016 AUG 25 AM 10: 05

3. All of Kirtland East and Kirtland West were, on November 29, 1956, and have continued to the present time to be within the exterior boundaries of the said Rio Grande Underground Water Basin.

4. On November 29, 1956, the United States of America owned within Kirtland East a water supply system consisting of 9 completed and operating wells, together with associated water storage and delivery works, and had prior to that date diverted and used underground waters of the Rio Grande Underground Water Basin by means of each and every of the said 9 wells for the lawful purposes of the said military installation.

5. The said nine wells in the Kirtland East water supply system were duly declared by an authorized representative of the United States of America in the office of the Plaintiff on the 4th day of October, 1957, and have been since that date designated in the files of the State Engineer as wells No. RG-1581 through RG-1589. The respective locations and priorities of the said 9 wells, as declared by the United States of America, are as follows:

RG-1581 NW1/4SE1/4, Sec. 31 T. 10 N., R. 4 E. March 1, 1949

RG-1582 NW1/4NW1/4, Sec. 1 T. 9 N., R. 3 E. August, 1949

RG-1583 NW1/4SW1/4, Sec. 30, T. 10 N., R. 4 E. August, 1949

RG-1584 NE1/4SW1/4, Sec. 6, T. 9 N., R. 4 E. August, 1949

RG-1585 NE1/4SW1/4, Sec. 29, T. 10 N., R. 4 E. July, 1952

RG-1586 SW1/4SE1/4, Sec. 32, T. 10 N., R. 4 E. July, 1952

RG-1587 NW1/4NW1/4, Sec. 6, T. 9 N., R. 4 E. Feb., 1955

RG-1588 SW1/4SW1/4, Sec. 5, T. 9 N., R. 4 E. Feb., 1955

RG-1589 SW1/4SW1/4, Sec. 15, T. 9 N., R. 4 E. Feb., 1949

STATE ENGINEERS OFFICE
ALBUQUERQUE, NEW MEXICO
2016 AUG 25 AM 10: 05

STATE ENGINEER OFFICE
ALBUQUERQUE, N. MEX.
73 DEC 3 A8:27

6. Between November 1, 1958, and May 27, 1959, the United States of America drilled or caused to be drilled, in the NW1/4NE1/4 of Sec. 20, T. 9 N., R. 4 E., an additional water well which was thereafter made a part of the water supply system of Kirtland East. This well is designated in the files of the State Engineer as RG-1581 through RG-1589-S. By means of the said well, the United States of America has thereafter continually diverted and beneficially used public underground waters of the Rio Grande Underground Water Basin, as a supplemental point of diversion in and for Kirtland East.

7. In 1972, the United States of America drilled or caused to be drilled an additional water well within Kirtland East in the NW1/4NE1/4 of Sec. 4, T. 9 N., R. 4 E., which well has been completed except for the installation of a pump and has not yet been put to beneficial use, and which is hereby designated RG-1581 through RG-1589-S-2. The said well was drilled for the purpose of serving as a supplemental well for the water supply system of Kirtland East

8. The United States of America owns, under the Constitution and laws of the State of New Mexico, the right to divert the public underground waters of the Rio Grande Underground Water Basin, through and by means of the said eleven wells set forth in paragraphs 5, 6 and 7, in an amount not to exceed an annual quantity of four thousand five hundred (4,500) acre-feet, and to apply the same to beneficial use for the purposes of Kirtland Air Force Base. The priorities of the said eleven wells composing the water supply system of Kirtland East are as set forth

STATE ENGINEERS OFFICE
ALBUQUERQUE, NEW MEXICO
2016 AUG 25 AM 10: 05

73 DEC 3 A8:27

above in paragraphs 5, 6 and 7. The defendants stipulate that the United States Air Force has no right to divert any of the underground waters of the Rio Grande Underground Water Basin, by means of the said 11 wells or otherwise, for the purposes of Kirtland Air Force Base, except as set forth in this Stipulation, provided, however, that the United States shall enjoy the same right as any other appropriator in the State of New Mexico to make application hereafter to the Plaintiff, State Engineer, for permit to drill supplemental well(s) (i.e., make partial or total change in point of diversion or place or purpose of use) or to effect the transfer of valid and existing water rights for the purposes of Kirtland Air Force Base.

9. On November 29, 1956, the United States of America owned a water supply system in and for Kirtland West consisting of two water wells whose respective locations and priorities were declared in the Office of the State Engineer, by a duly authorized representative of the United States on the 4th day of October, 1957, to be as follows:

RG-1579 NW1/4NW1/4, Sec. 35, T. 10 N., R. 3 E., Oct. 9, 1952

RG-1580 SE1/4NW1/4, Sec. 34, T. 10 N., R. 3 E., Mar. 6, 1956

10. In 1969, the United States of America drilled or caused to be drilled an additional well in and for the Kirtland West water supply system, designated in the records of the State Engineer as RG-1579 and RG-1580 Combined-S, which well was thereafter made a part of the Kirtland West water supply system as a supplemental well.

11. The United States of America owns, under the Constitution and laws of the State of New Mexico, the right to divert

STATE ENGINEERS OFFICE
ALBUQUERQUE, NEW MEXICO
2016 AUG 25 AM 10: 05

ALBUQUERQUE, N. MEX.
73 DEC 3 A8:27

the public underground waters of the Rio Grande Underground Water Basin by means of the three wells set out in paragraphs 9 and 10 above in an amount not to exceed an annual quantity of 1,898 acre-feet for the purposes of Kirtland Air Force Base. The defendants stipulate that the United States Air Force has no right to divert or use the underground waters of the Rio Grande Underground Water Basin for the purposes of Kirtland Air Force Base, except as set forth in this Stipulation, by means of the said three wells or otherwise, provided, however, that the United States of America shall enjoy the same right as any other appropriator of public water in the State of New Mexico to make application to the Plaintiff, State Engineer, hereafter for permit to drill and use supplemental well(s) (i.e., make partial or total change in point of diversion or place or purpose of use) or to effect the transfer of existing valid water rights for the purposes of Kirtland Air Force Base.

STATE ENGINEERS OFFICE
ALBUQUERQUE, NEW MEXICO
2016 AUG 25 AM 10: 05

12. The United States of America also owns the right under the Constitution and laws of the State of New Mexico to divert public underground waters of the Rio Grande Underground Water Basin in an amount not to exceed three acre-feet per year by and from each of the following three domestic wells located and existing within, and for the purposes of Kirtland Air Force Base:

Location	Priorities
RG-1578 SE1/4NW1/4, Sec. 35, T. 9 N., R. 4 E.	1945
RG-1590 SE1/4NW1/4, Sec. 35, T. 9 N., R. 4 E.	1945
RG-1591 NE1/4SE1/4, Sec. 24, T. 9 N., R. 4 E.	1948

13. The defendants stipulate that the United States Air Force will not after the entry of final judgment herein drill

73 DEC 3 A 8: 27

or cause or allow to be drilled any water well(s) within the boundaries of the Rio Grande Underground Water Basin, within and/or for the purposes of Kirtland Air Force Base (including Kirtland East and Kirtland West), except when and to the extent that it will have fully complied with the laws of the State of New Mexico and the Rules and Regulations of the State Engineer in respect to obtaining from the State Engineer permit(s) to drill water wells and/or produce public waters therefrom for any purpose.

14. The defendants stipulate that they will make on behalf of the United States accurate monthly reports to the Plaintiff, State Engineer, of the total metered quantities of underground water diverted by means of any and all of the wells composing the Kirtland East and Kirtland West water supply systems, provided, however, that the United States of America shall not be required to make application for, or obtain permit authorizing the physical combination of the two water supply systems so long as the total annual metered diversion from each system is within the respective limit established in paragraphs 8 and 11. The defendants further agree that they will, within 60 days of the date of entry of final judgment herein, file in the Office of the Plaintiff, State Engineer, on forms to be supplied by the Plaintiff, applications on behalf of the United States seeking the right to divert and use public underground waters of the Rio Grande Underground Water Basin by means of those two certain wells RG-1581 through RG-1589-S-2 and RG-1579 and RG-1580 Combined-S, within the respective limits set forth in paragraphs 8 and 11 above. The State of New Mexico agrees that together

STATE ENGINEERS OFFICE
ALBUQUERQUE, NEW MEXICO
2016 AUG 25 AM 10: 05

73 DEC 3 A8:27

with the terms of judgment entered in this cause pursuant to this Stipulation, the said applications shall be administratively recognized as evidencing the right of the United States to use the said two wells within the terms of this Stipulation and the Order of the Court entered pursuant thereto, without any further requirement for advertisement or hearing.

PAUL L. BLOOM
Special Assistant Attorney General
State of New Mexico

s/ Victor Ortega
United States Attorney

STATE ENGINEERS OFFICE
ALBUQUERQUE, NEW MEXICO
2016 AUG 25 AM 10: 05

73 DEC 3 A 8: 27

DEPARTMENT OF THE AIR FORCE
377TH AIR BASE WING (AFGSC)

Colonel Eric H. Froehlich
377 ABW/CC
2000 Wyoming Blvd SE
Kirtland AFB NM 87117-5000

AUG 24 2016

Office of the State Engineer
c/o Christopher Burrus, Water Rights Division
5550 San Antonio Blvd. NE
Albuquerque NM 87109

Dear Mr. Burrus

Kirtland Air Force Base (AFB) is submitting herein one "Application for Permit to Change an Existing Water Right" for the temporary pilot system extraction wells KAFB-106EX1 and KAFB-106EX2, and injection well KAFB-106IN1. This application seeks to permit the exploratory wells KAFB-106EX1, KAFB-106EX2, and KAFB-106IN1 as supplemental wells to Kirtland AFB water rights RG-1579 through RG-1589 by changing the purpose of use to pollution control and recovery, and by adding places of use not currently described in water rights RG-1579 through RG-1589. The extraction and injection wells will be advanced into the upper 20 to 30 feet of the water table as part of an in-situ bioremediation pilot test at Kirtland AFB Bulk Fuels Facility Solid Waste Management Unit (SWMU) ST-106/SS-111. All wells included in this request are proposed to be advanced on Kirtland AFB property.

STATE ENGINEERS OFFICE
ALBUQUERQUE, NEW MEXICO
2016 AUG 25 AM 10: 03

As part of the Environmental Security Technology Certification Program (ESTCP) project, an in-situ pilot test will evaluate the potential use of enhanced EDB degradation using a biostimulation or bioaugmentation recirculation system. The recirculation system will be designed to extract, amend, and reinject groundwater throughout a 150-foot demonstration zone. The components of the recirculation system will include the extraction and injection wells and their equipment, a tracer and amendment delivery system, and the ancillary equipment required to power the recirculation system. The system will be designed to allow anaerobic mixing of multiple amendments and a bioaugmentation culture into extracted groundwater, prior to discharge to the injection well (KAFB-106IN1).

The two extraction wells will be located approximately 90 feet upgradient and downgradient from the single injection well, respectively, and will be used to periodically recirculate groundwater during individual phases of the recirculation pilot test. The extraction wells will be designed to extract groundwater at a rate of up to 25 gallons per minute each (40 acre-feet per year each), and the injection well will recirculate amended groundwater into the aquifer at a rate of up to 50 gallons per minute (80 acre-feet per year). However, the flow may be dictated by the capacity of the wells to either extract groundwater or inject amended groundwater. The extracted, amended, and injected groundwater will have no additional

diversion to Kirtland AFB's water rights. The pilot study is estimated to run for approximately 2 years; however, it is possible that Kirtland AFB could operate the system for a longer period of time if the pilot study is successful.

Extraction wells KAFB-106EX1 and KAFB-106EX2, and injection well KAFB-106IN1 will be supplemental to the wells described in Kirtland AFB file number RG-1579 through RG-1589. The application does not request to increase the allowable groundwater diversion described in RG-1579 through RG-1589, but seeks to change the purpose of use to pollution control and recovery and to add a place of use not currently described in RG-1579 through RG-1589. This application seeks to add Kirtland AFB as a place of use to the water rights RG-1579 through RG-1589.

The specific requirements for pollution control and recovery will apply to the extraction (KAFB-106EX1 and KAFB-106EX2) and injection wells (KAFB-106IN1), and are as follows:

- The need for installing the two extraction wells and one injection well is as follows:
  - An in-situ bioremediation pilot test will be conducted to determine and evaluate the potential for enhanced EDB degradation after biostimulation or bioaugmentation with EDB degrading microorganisms using a recirculation system.
- The estimated maximum period of time for completion of the operation:
  - Recirculation will be performed three times during the pilot test; the active pumping timeframe within each stage will last for a period of approximately four weeks. The initial recirculation stage will mix a tracer in groundwater to evaluate subsurface transport and mixing characteristics. The four weeks of active pumping will be followed by approximately four weeks of monitoring. In the second recirculation stage, groundwater will be amended with inorganic nutrients and yeast extract, and reinjected into the aquifer to assess the performance of biostimulation for EDB degradation. This second active pumping stage will be followed by approximately twelve weeks of monitoring. In the third recirculation stage, groundwater will be amended with a bioaugmentation culture and inorganic nutrients and reinjected into the aquifer to assess the performance of bioaugmentation for EDB degradation. This third active pumping stage will be followed by approximately twelve weeks of monitoring. After active recirculation is complete, groundwater will be monitored for approximately 12 weeks.

- The annual diversion amount for each well:
  - Up to 40 acre-feet per year.

- The annual consumptive use for each well:
  - There is no consumptive use. The amount of groundwater removed by the two extraction wells (approximately 80 acre-feet per year) will be amended and reinjected into the aquifer.

- The maximum amount of water to be diverted for the duration of the operation:

STATE ENGINEERS OFFICE
ALBUQUERQUE DIVISION
2016 AUG 25 PM 12: 03

- Groundwater will be extracted from KAFB-106EX1 and KAFB-106EX2 at a rate of up to 25 gallons per minute per well (40 acre-feet per year per well) or a combined total from both wells of up to 50 gpm (80 acre-feet per year).

- Groundwater extracted from the aquifer will be injected back into the aquifer at a rate of up to 50 gallons per minute (80 acre-feet per year) during this operation.

- The method and place of discharge
  - The groundwater from extraction wells KAFB-106EX1 and KAFB-106EX2, which are located within current SWMU ST-106/SS-111, will be discharged to injection well KAFB-106IN1, which is located between the extraction wells (see attached Figure 1).

- The method of measurement of water produced and discharged:
  - Extracted groundwater will measured through a totalizing flow meter. Injected amended groundwater will also be measured through another totalizing flow meter (both instantaneous and total flow will be logged).

- The source of water to be injected:
  - Injected water will be extracted from two proposed extraction wells (KAFB-106EX1 and KAFB-106EX2) installed as part of the in-situ bioremediation pilot test at SWMU ST-106/SS-111. The extracted water will be amended with inorganic nutrients prior to injection.

STATE ENGINEERS OFFICE
ALBUQUERQUE, NEW MEXICO
2016 AUG 25 AM 10: 04

- The method of measurement of water injected:
  - The amount of water entering the injection well will be measured using a flow meter (both instantaneous and total flow will be logged).

- The characteristics of the aquifer:
  - The aquifer is primarily comprised of unconsolidated sand and gravel, with some intermixed silt, with an average hydraulic conductivity of 63 feet/day.

- The method of determining the resulting annual consumptive use of water and depletion from any related stream system:
  - Groundwater extracted from KAFB-106EX1 and KAFB-106EX2 are each projected to be extracted at a rate of up to 25 gallons per minute, equivalent to 40 acre-feet per year per well. The groundwater will be metered as it is extracted from the aquifer and pumped to the recirculation system, and will be metered as the amended groundwater is injected into the aquifer well KAFB-106IN1. The volume removed from the extraction wells will be equal to the amount injected into the aquifer; therefore, there is no consumptive use.

- Proof of any permit required from the New Mexico Environment Department:
  - The New Mexico Environment Department – Hazardous Waste Bureau and Ground Water Quality Bureau has determined that a discharge permit will not be required for the short-term in-situ pilot test. If the pilot test is successful, then

Kirtland AFB will work with NMED to identify any permits required if a full-scale system is to be designed and implemented.

- An access agreement if the applicant is not the owner of the land on which the pollution plume control or recovery well is to be located:
  - Kirtland AFB is the landowner.

In addition to the application, this packet contains a summary of the well construction for the extraction and injection wells, the District Court Order dated November 27, 1973, and a figure showing the well locations. The well construction details may be subject to change.

Please contact Mr. L. Wayne Bitner at (505) 853-3484 or at ludie.bitner@us.af.mil or Mr. Scott Clark at (505) 846-9017 or at scott.clark@us.af.mil if you have any questions.

Sincerely

ERIC H. FROEHLICH, Colonel, USAF
Commander

Attachment:
WR07 Application for Permit to Drill Wells with No Consumptive Use of Water

cc:
AFCEC/CZ (Bodour, Bitner, Clark)
USACE-Omaha District Office (Ellender)
USACE-ABQ District Office (Simpler, Phaneuf)
Public Info Repository, Administrative Record/Information Repository (AR/IR) and File

STATE ENGINEERS OFFICE
ALBUQUERQUE, NEW MEXICO
2016 AUG 25 AM 10: 04

STATE OF NEW MEXICO
OFFICE OF THE STATE ENGINEER

DISTRICT 1

TOM BLAINE, P.E.
NEW MEXICO STATE ENGINEER

5550 San Antonio Drive, N.E.
Albuquerque, NM 87109 (505) 383-4000

August 15, 2016

File No.: RG-1579

Kirtland Air Force Base
c/o Wayne Bitner, Chief Environmental Restoration
AFCEC/Kirtland AFB IST; Bldg 20685
2050 Wyoming Blvd, SE
Kirtland AFB, NM 87117

RE: MONITORING WELL PERMIT RG-1579 (POD316, POD317, and POD318)

Greetings,

Enclosed is your copy of Permit No.: RG-1579 POD316, POD317, and POD318 to drill exploratory wells with no consumptive use, has been approved in accordance with the attached Conditions of Approval.

Sincerely,

Christopher Burrus
Water Resource Specialist
Albuquerque, OSE, District 1

CB;cb;
Enclosure as stated
c: WRAB

HCI-55320
$15.00

File No. RG-1579
POD 316 to 318

NEW MEXICO OFFICE OF THE STATE ENGINEER

APPLICATION FOR PERMIT TO DRILL A WELL WITH NO CONSUMPTIVE USE OF WATER

(check applicable box):

For fees, see State Engineer website: http://www.ose.state.nm.us/

Purpose:	☐ Pollution Control And / Or Recovery	☐ Geo-Thermal
☐ Exploratory	Construction Site De-Watering	☒ Other (Describe): **Two groundwater extraction wells and one injection well**
☐ Monitoring	Mineral De-Watering	

A separate permit will be required to apply water to beneficial use.

☐ Temporary Request - Requested Start Date: Requested End Date:

Plugging Plan of Operations Submitted? ☐ Yes ☒ No

1. APPLICANT(S)

Name: **Kirtland Air Force Base**	Name:
Contact or Agent: check here if Agent ☒ **Wayne Bitner, Chief Environmental Restoration**	Contact or Agent: check here if Agent ☐
Mailing Address: **AFCEC/Kirtland AFB IST; Bldg 20685; 2050 Wyoming Blvd SE**	Mailing Address:
City: **Kirtland AFB**	City:
State: **NM** Zip Code:**87117**	State: Zip Code:
Phone: N/A Home Cell Phone (Work):**505-853-3484**	Phone: Home Cell Phone (Work):
E-mail (optional):**ludie.bitner@us.af.mil**	E-mail (optional):

STATE ENGINEERS OFFICE
ALBUQUERQUE, NEW MEXICO
2015 AUG -8 PM 12: 4

FOR OSE INTERNAL USE

Application for Permit, Form wr-07, Rev 4/12/12

File Number: RG-1579	Trn Number:
Trans Description (optional): POD 316 to 318	
Sub-Basin:	
PCW/LOG Due Date:	

2. WELL(S) Describe the well(s) applicable to this application.

Location Required: Coordinate location must be reported in NM State Plane (NAD 83), UTM (NAD 83), or Latitude/Longitude (Lat/Long - WGS84).
District II (Roswell) and District VII (Cimarron) customers, provide a PLSS location in addition to above.

☒ NM State Plane (NAD83) (Feet)
☐ NM West Zone
☐ NM East Zone
☒ NM Central Zone

☐ UTM (NAD83) (Meters)
☐ Zone 12N
☐ Zone 13N

☐ Lat/Long (WGS84) (to the nearest 1/10th of second)

Well Number (if known):	X or Easting or Longitude:	Y or Northing or Latitude:	Provide if known: -Public Land Survey System (PLSS) (*Quarters or Halves , Section, Township, Range*) OR - Hydrographic Survey Map & Tract; OR - Lot, Block & Subdivision; OR - Land Grant Name
KAFB-106EX1 POD 316	1542418.47	1473782.33	
KAFB-106EX2 POD 317	1542254.00	1473837.97	
KAFB-106IN1 POD 318	1542331.87	1473810.39	

STATE ENGINEERS OFFICE ALBUQUERQUE, NEW MEXICO 2016 AUG -8 PM 12:42

NOTE: If more well locations need to be described, complete form WR-08 (Attachment 1 – POD Descriptions)
Additional well descriptions are attached: ☐ Yes ☒ No **If yes, how many**_____

Other description relating well to common landmarks, streets, or other: **See attached Figure 1**

Well is on land owned by: **Kirtland Air Force Base**

Well Information: NOTE: If more than one (1) well needs to be described, provide attachment. Attached? ☒ Yes ☐ No
If yes, how many **3 wells**

Approximate depth of well (feet): See attachment	Outside diameter of well casing (inches): 6"
Driller Name: TBD	Driller License Number: TBD

3. ADDITIONAL STATEMENTS OR EXPLANATIONS

Please see attachments for well locations and installation details. Extraction wells KAFB-106EX1 and KAFB-106EX2, and the injection well KAFB-106IN1 will be advanced into the upper 20 to 30 feet of the water table as part of an in-situ bioremediation pilot test. The two extraction wells will be located approximately 90 feet upgradient and downgradient from the single injection well, respectively, and will be used to periodically recirculate groundwater during individual phases of the recirculation pilot test.

FOR OSE INTERNAL USE

Application for Permit, Form wr-07

File Number: RG- 1579 POD 316 to 318	Trn Number:

4. SPECIFIC REQUIREMENTS: The applicant must include the following, as applicable to each well type. Please check the appropriate boxes, to indicate the information has been included and/or attached to this application:

Exploratory: ☐ Include a description of any proposed pump test, if applicable.	**Pollution Control and/or Recovery:** ☐ Include a plan for pollution control/recovery, that includes the following: ☐ A description of the need for the pollution control or recovery operation. ☐ The estimated maximum period of time for completion of the operation. ☐ The annual diversion amount. ☐ The annual consumptive use amount. ☐ The maximum amount of water to be diverted and injected for the duration of the operation. ☐ The method and place of discharge. ☐ The method of measurement of water produced and discharged. ☐ The source of water to be injected. ☐ The method of measurement of water injected. ☐ The characteristics of the aquifer. ☐ The method of determining the resulting annual consumptive use of water and depletion from any related stream system. ☐ Proof of any permit required from the New Mexico Environment Department. ☐ An access agreement if the applicant is not the owner of the land on which the pollution plume control or recovery well is to be located.	**Construction De-Watering:** ☐ Include a description of the proposed dewatering operation, ☐ The estimated duration of the operation, ☐ The maximum amount of water to be diverted, ☐ A description of the need for the dewatering operation, and, ☐ A description of how the diverted water will be disposed of.	**Mine De-Watering:** ☐ Include a plan for pollution control/recovery, that includes the following: ☐ A description of the need for mine dewatering. ☐ The estimated maximum period of time for completion of the operation. ☐ The source(s) of the water to be diverted. ☐ The geohydrologic characteristics of the aquifer(s). ☐ The maximum amount of water to be diverted per annum. ☐ The maximum amount of water to be diverted for the duration of the operation. ☐ The quality of the water. ☐ The method of measurement of water diverted. ☐ The recharge of water to the aquifer. ☐ Description of the estimated area of hydrologic effect of the project. ☐ The method and place of discharge. ☐ An estimation of the effects on surface water rights and underground water rights from the mine dewatering project. ☐ A description of the methods employed to estimate effects on surface water rights and underground water rights. ☐ Information on existing wells, rivers, springs, and wetlands within the area of hydrologic effect.
Monitoring: ☐ Include the reason for the monitoring well, and, ☐ The duration of the planned monitoring.		**Geo-Thermal:** ☐ Include a description of the geothermal heat exchange project, ☐ The amount of water to be diverted and re-injected for the project, ☐ The time frame for constructing the geothermal heat exchange project, and, ☐ The duration of the project. ☐ Preliminary surveys, design data, and additional information shall be included to provide all essential facts relating to the request.	

ACKNOWLEDGEMENT

I, We (name of applicant(s)), ERIC H. FROEHLICH, COLONEL, USAF, 377 ABW COMMANDER
Print Name(s)

affirm that the foregoing statements are true to the best of (my, our) knowledge and belief.

Applicant Signature

Applicant Signature

ACTION OF THE STATE ENGINEER

This application is:

☑ approved ☐ ~~partially approved~~ ☐ ~~denied~~

provided it is not exercised to the detriment of any others having existing rights, and is not contrary to the conservation of water in New Mexico nor detrimental to the public welfare and further subject to the attached conditions of approval.

Witness my hand and seal this 15 day of August 20 16, for the State Engineer,

Tom Blaine, P.E.
State Engineer

, State Engineer

By: CHRISTOPHER BURRIS
Signature Print

Title: Water Resource Specialist
Print

STATE ENGINEERS OFFICE
ALBUQUERQUE, NEW MEXICO
2016 AUG - PM 12: 42

FOR OSE INTERNAL USE

Application for Permit, Form wr-07

File Number: RG-1579	Tm Number:

POD 3/6 to 3/8

NEW MEXICO OFFICE OF THE STATE ENGINEER
PERMIT TO DRILL WELL WITH NO CONSUMPTIVE USE
CONDITIONS OF APPROVAL

This application is approved provided it is not exercised to the detriment of any others having existing rights, and is not contrary to the conservation of water in New Mexico nor detrimental to the public welfare of the state; and further subject to the following conditions of approval:

Permittee:	Kirtland Air Force Base c/o Wayne Bitner, Chief Environmental Restoration AFCEC/Kirtland AFB IST; Bldg 20685 2050 Wyoming Blvd, SE Kirtland AFB, NM 87117
Permit Number:	RG-1579
Application File Date:	August 8, 2016
Priority:	N/A
Source:	Groundwater
Points of Diversion:	RG-1579 POD316 (KAFB-106EX1) located at a point where X = 1,542,418.47 feet and Y = 1,473,782.33 feet, NMSPCS NAD83, Central Zone within Section 36, Township 10 North, Range 03 East, Bernalillo County, New Mexico. RG-1579 POD317 (KAFB-106EX2) located at a point where X = 1,542,225.0 feet and Y = 1,473,837.97 feet, NMSPCS NAD83, Central Zone within Section 36, Township 10 North, Range 03 East, Bernalillo County, New Mexico. RG-1579 POD318 (KAFB-106IN1) located at a point where X = 1,542,331.87 feet and Y = 1,473,810.39 feet, NMSPCS NAD83, Central Zone within Section 36, Township 10 North, Range 03 East, Bernalillo County, New Mexico. All wells are located on land owned by Kirtland Air Force Base.
Purpose of Use:	Exploration
Place of Use:	N/A
Amount of Water:	N/A

NEW MEXICO OFFICE OF THE STATE ENGINEER
PERMIT TO DRILL WELL WITH NO CONSUMPTIVE USE
CONDITIONS OF APPROVAL

1. No water shall be appropriated and beneficially used under this permit.
2. Wells RG-1579 POD316, POD317, and POD318 shall be drilled and constructed by a driller licensed in the State of New Mexico in accordance with 19.27.4 NMAC.
3. Completed and properly executed Well Records on the form provided by the State Engineer shall be filed within 10 days after the wells are drilled.
4. The Permittee is responsible for obtaining an access agreement.
5. If artesian water is encountered, the Permittee and driller shall comply with Subsection C of 19.27.4.31 NMAC and all rules and regulations pertaining to the drilling and casing of the artesian wells.
6. Wells RG-1579 POD316, POD317, and POD318 shall be plugged upon completion of the permitted use, and a plugging report shall be filed with the State Engineer within 10 days after the wells are plugged.
7. Wells RG-1579 POD316, POD317, and POD318 must be completed within one year of the approval date of this permit.
8. Water shall be used from the well for exploration purposes only, unless and until a permit for a specific use has been issued by the State Engineer.

Witness my hand and seal this 15 day of August 2016

Tom Blaine, P.E.
State Engineer

By: _____
Christopher Burrus
Water Resource Specialist
District 1

File No: RG-1579

FIGURE 1
PROPOSED WELL LOCATIONS

STATE ENGINEERS OFFICE
ALBUQUERQUE, NEW MEXICO
2016 AUG -8 PM 12:42

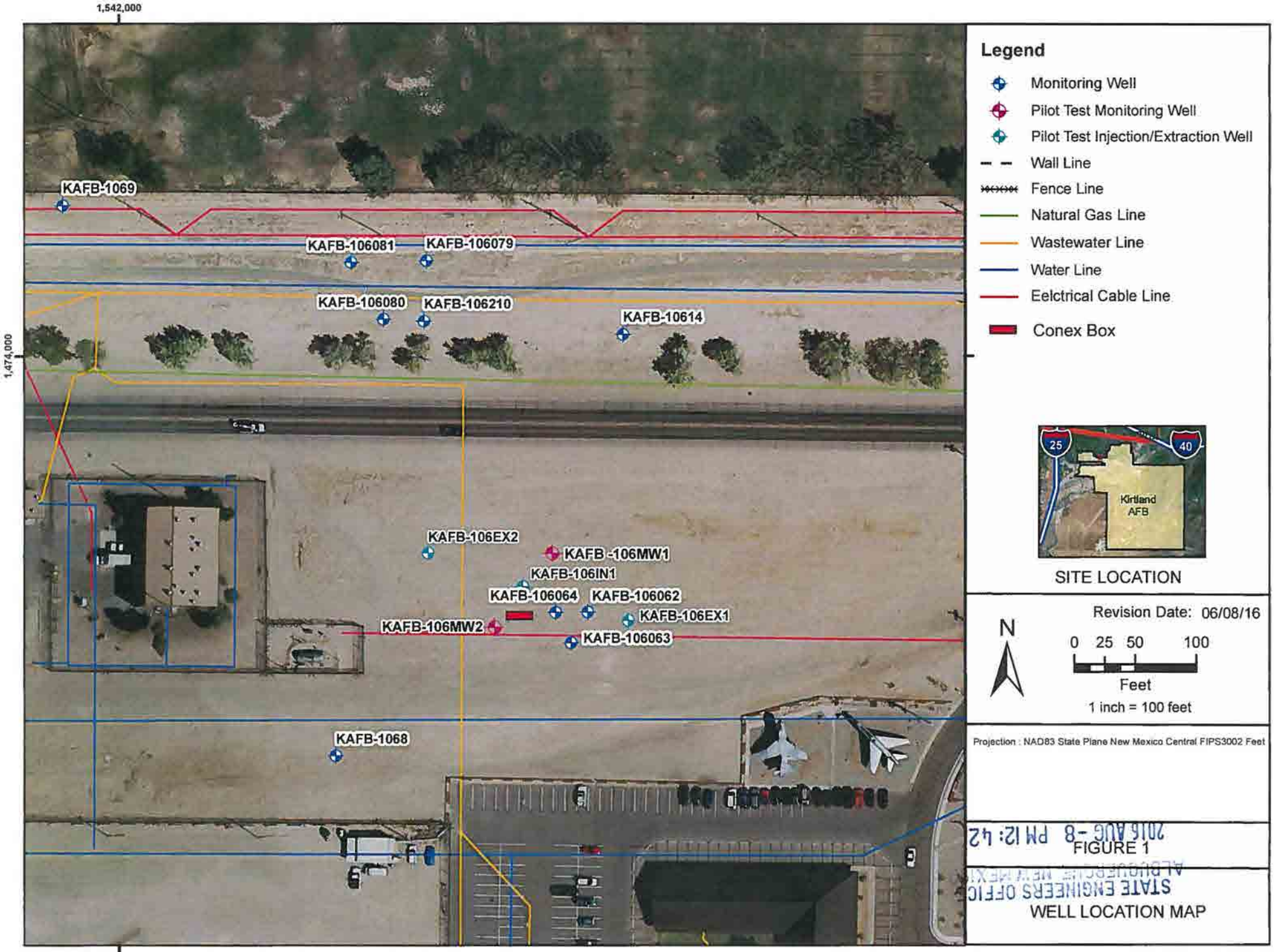

2016 AUG -8 PM 12: 42
STATE ENGINEERS OFFIC
ALBUQUERQUE, NEW MEXI

H:\Kirtland_AFB\GIS_Documents\Project_Maps\ESTCP\KAFB_ESTCP003_location.mxd 06/08/16

ATTACHMENT I
WELL SUMMARY

STATE ENGINEERS OFFICE
ALBUQUERQUE, NEW MEXICO
2016 AUG -8 PM 12: 42

STATE ENGINEERS OFFICE
ALBUQUERQUE, NEW MEXICO
2016 AUG -8 PM 12: 40

KIRTLAND AIR FORCE BASE
BULK FUELS FACILITY
WELL SUMMARY

ESTCP Extraction and Injection Wells

Extraction and injection wells will be installed in accordance with the Ethylene Dibromide Recirculation Pilot Test Work Plan (CB&I, 2016). KAFB-106EX1 and KAFB-106EX2 will be used as extraction wells, and KAFB-106IN1 will be used as an injection well for recirculated groundwater and amendment injection. The two extraction wells will be located approximately 90 feet upgradient and downgradient from the single injection well, respectively, and will be used to periodically recirculate groundwater during individual phases of the recirculation pilot test. Groundwater will be extracted from each extraction well at a rate of up to 25 gallons per minute, and injected into KAFB-106IN1 at a rate of up to 50 gallons per minute.

Both the extraction and injection wells will be dilled using Air Rotary Casing Hammer (ARCH) and will be constructed within a 11 ¾ -inch borehole. The wells will be constructed using 6-inch diameter, PVC flush threaded riser pipe and equipped with a 0.040-inch slot stainless steel wire wrap screen with a 5-foot PVC sump (6-inch diameter), and flush threaded bottom cap. For the injection well (KAFB-106IN1), the 20-foot screen will be installed with the top of screen at static groundwater level and extend to 20-feet below static water level (groundwater is approximately 480 feet below ground surface; consequently the screen may extend from 480 to 500 feet below ground surface). To minimize aeration of extracted water, the two extraction wells will be installed with 20-foot screens, the top of which will be located 5 feet below the static groundwater level (groundwater is approximately 480 feet below ground surface; consequently the screen may extend from 485 to 505 feet below ground surface). Following placement of the well screen and riser pipe, filter pack (sand) will be placed adjacent to the well screen followed by a fine sand seal and bentonite chip seal. A cement/bentonite grout will extend from the bentonite chip seal to near ground surface. The bentonite chip seal will be hydrated in lifts using a "clean" water source. Details of well construction are described below.

- The target depth of the well will be re-assessed before drilling using groundwater levels from off-setting wells to project groundwater level at the selected boring location. Currently, depth to static groundwater level is 480-feet below ground surface. If groundwater is encountered during drilling at a shallower depth, then drilling will be stopped temporarily, and the hole will be allowed to equilibrate for approximately 1 hour to determine the water table elevation.

- If the boring is over drilled beyond the bottom of the proposed sump elevation by more than 10 feet, the borehole will be backfilled with filter pack material to an elevation approximately 5 feet below the proposed bottom of sump elevation.

- At the completion drilling and before well construction, a borehole deviation measuring device will be used to log the borehole. The device may be similar to the Reflex EZ-Shot (Single Shot) Deviation Tool or other acceptable device. The results will be used to assess borehole deviation, which is limited to a total of 5 feet or less over the 505 or 510 foot depth of the borehole.

- The wells will be constructed within the borehole using a 5-foot PVC sump and flush threaded cap; flush-threaded stainless steel wire wrap screen with a 0.040-inch slot; and 6-inch PVC riser pipe to the top of the well stick-up (approximately 485 feet). The sump will extend 5 feet below the bottom of the screened interval. Centralizers will be placed just below the screen and just above the screen.

- Once the well string is emplaced inside the driven casing, the 10/20 sand filter pack will be installed in the annular space between the well string and the borehole from the total depth of the bore hole to 10 feet above the top of screen. The filer pack will be emplaced by filling the annulus between the well string and outer driven casing using a treme pipe, then slowly extracting the driven casing, allowing the volume of filter pack to fill the annulus between the well string and the borehole wall. This will be done incrementally in 10-foot lifts, never allowing the screen to be directly exposed to the formation. During this process the screen interval will be gently surged between lifts to insure filter pack placement with no voids.

- A 10-foot hydrated bentonite seal will be emplaced above the sand filter pack, incrementally hydrated with potable water in 1-foot lifts. The seal will be allowed to hydrate for 30 minutes after the last lift is emplaced.

- A high solids (20 wt%) bentonite grout will be emplaced by tremie pipe to within 30 feet of the surface. The bentonite grout will be installed in lifts (approximately 70 feet thick) to prevent collapse of the PVC casing.

- To the ground surface, a cement/bentonite grout mixture will be installed over the high-solids bentonite grout using a tremie pipe. The mixture will consist of 94 pounds of Portland cement to 7 gallons of approved water and 3 percent by weight of sodium bentonite powder.

- The wells will be finished below grade, in a fiberglass well vault approximately 4' by 6' by 4' in size.

STATE ENGINEERS OFFICE
ALBUQUERQUE, NEW MEXICO
2016 AUG -8 PM 12: 42

As summarized above, both injection and extraction wells will be installed in a similar manner. However, injection well will require the installation of 1.5-inch black steel injection pipe, a Baski flow control valve and associated controls, and a transducer to monitor injection levels. Additionally a 1-inch flush threaded Sch. 40 PVC pipe will be installed to allow access for collection of groundwater level measurements. A sanitary seal will be used to secure the injection pipe, power cable, Baski Valve controls, access drop pipe, and transducer. The injection pipe will extend from the well seal to approximately the mid-point of the screen interval (490 feet bgs); this is where the Baski valve will be set.

The injection pipe will be composed of 60 feet of 1.5 inch fusion bonded epoxy (FBE) coated steel NPT threaded discharge pipe from the valve to above the water table, coupled to 1.5 inch black carbon steel pipe to the surface. Couples will be black carbon steel on the black carbon steel pipe. The injection pipe will be suspended from the surface and centralizers will be used to center and stabilize the tubing during injection. The injection pipe will connect to the Baski flow control valve, below which will be a Grundfos pump. A flow meter and totalizer (volumes will be measured in gallons) will be used measure the injection rate and volume of groundwater entering the injection well.

References

CB&I. 2016. *Ethylene Dibromide Recirculation Pilot Test Work Plan.* Prepared by CB&I Federal Services. Draft. July.

USACE. 2011. *Groundwater Investigation Work Plan, Bulk Fuels Facility (BFF) Spill, Solid Waste Management Units ST-106 and SS-111, Kirtland Air Force Base, Albuquerque, New Mexico.* Prepared by Shaw Environmental & Infrastructure, Inc. for the USACE Albuquerque District under USACE Contract No. W912DY-10-D-0014, Delivery Order 0002. March.

DEPARTMENT OF THE AIR FORCE
377TH AIR BASE WING (AFGSC)

JUL 2 8 2016

Colonel Eric H. Froehlich
377 ABW/CC
2000 Wyoming Blvd SE
Kirtland AFB NM 87117-5000

STATE ENGINEERS OFFICE
ALBUQUERQUE, NEW MEXICO
2016 AUG -8 PM 12: 41

Office of the State Engineer
c/o Christopher Burrus, Water Rights Division
5550 San Antonio Blvd. NE
Albuquerque NM 87109

Dear Mr. Burrus

Kirtland Air Force Base (AFB) is submitting herein one "Application for Permit to Drill Wells with No Consumptive Use of Water" for the temporary pilot system extraction wells KAFB-106EX1 and KAFB-106EX2, and injection well KAFB-106IN1. The extraction and injection wells will be advanced into the upper 20 to 30 feet of the water table as part of an in-situ bioremediation pilot test at Kirtland AFB Bulk Fuels Facility Solid Waste· Management Unit (SWMU) ST-106/SS-111. These wells are proposed to be advanced on Kirtland AFB property.

As part of the Environmental Security Technology Certification Program (ESTCP) project, an in-situ pilot test will evaluate the potential use of enhanced EDB degradation using a biostimulation or bioaugmentation recirculation system. The recirculation system will be designed to extract, amend, and reinject groundwater throughout a 150-foot demonstration zone. The components of the recirculation system will include the extraction and injection wells and their equipment, a tracer and amendment delivery system, and ancillary equipment to power the recirculation system. The system will be designed to allow anaerobic mixing of multiple amendments and a bioaugmentation culture into extracted groundwater, prior to discharge to the injection well.

The extraction and injection wells will be constructed using approximately 485 feet of 6 inch diameter polyvinyl chloride (PVC) casing equipped with 20 feet of flush-threaded stainless steel wire wrap screen (0.040 slot) with a 5-foot PVC (6-inch diameter) sump and flush-threaded bottom cap. The top of the screen for the injection well (KAFB-106IN1) will be set at static groundwater level and extend to 20-feet below static water level. The two extraction wells (KAFB-106EX1 and KAFB-106EX2) will be installed with 20-foot screens, with the top of screen set at 5 feet below the static groundwater level. The two extraction wells will be located approximately 90 feet upgradient and downgradient from the single injection well, respectively, and will be used to periodically recirculate groundwater during individual phases of the recirculation pilot test. The extraction wells will be designed to extract groundwater at a rate of up to 25 gallons per minute each, and the injection well will recirculate amended groundwater

into the aquifer at a rate of up to 50 gallons per minute. However, the flow may be dictated by the capacity of the wells to either extract groundwater or inject amended groundwater. Discharge piping from the recirculation system will extend down into the water column, ending at approximately the mid-point of the screen interval.

Relevant information describing the use of the two extraction wells (KAFB-106EX1 and KAFB-106EX2) and one injection well (KAFB-106IN1) are as follows:

- The need for installing the two extraction wells and one injection well is as follows:
  - An in-situ bioremediation pilot test will be conducted to determine and evaluate the potential for enhanced EDB degradation after biostimulation or bioaugmentation with EDB degrading microorganisms using a recirculation system.

- The estimated maximum period of time for completion of the operation:
  - Recirculation will be performed three times during the pilot test; the active pumping timeframe within each stage will last for a period of approximately four weeks. The initial recirculation stage will mix a tracer in groundwater to evaluate subsurface transport and mixing characteristics. The four weeks of active pumping will be followed by approximately four weeks of monitoring. In the second recirculation stage, groundwater will be amended with inorganic nutrients and yeast extract, and reinjected into the aquifer to assess the performance of biostimulation for EDB degradation. This second active pumping stage will be followed by approximately twelve weeks of monitoring. In the third recirculation stage, groundwater will be amended with a bioaugmentation culture and inorganic nutrients and reinjected into the aquifer to assess the performance of bioaugmentation for EDB degradation. This third active pumping stage will be followed by approximately twelve weeks of monitoring. After active recirculation is complete, groundwater will be monitored for approximately 12 weeks.

- The annual diversion amount for each well:
  - Up to 40 acre-feet per year.

- The annual consumptive use for each well:
  - There is no consumptive use. The amount of groundwater removed by the two extraction wells (approximately 80 acre-feet per year) will be amended and reinjected into the aquifer.

- The maximum amount of water to be diverted for the duration of the operation:
  - Groundwater will be extracted from KAFB-106EX1 and KAFB-106EX2 at a rate of up to 25 gallons per minute per well (40 acre-feet per year) or a total of up to 50 gpm (80 acre feet per year).
  - Groundwater extracted from the aquifer will be injected back into the aquifer at a rate of up to 50 gallons per minute during this operation.

STATE ENGINEERS OFFICE
ALBUQUERQUE, NEW MEXICO
2015 AUG -8 PM 12:41

- The method and place of discharge:
  - The groundwater from extraction wells KAFB-106EX1 and KAFB-106EX2, which are located within SWMU ST-106/SS-111, will be discharged to injection well KAFB-106IN1, which is located upgradient from the extraction wells (see attached figure).

- The method of measurement of water produced and discharged:
  - Extracted groundwater will measured through a totalizing flow meter. Injected amended groundwater will also be measured through another totalizing flow meter (both instantaneous and total flow will be logged).

- The source of water to be injected:
  - Injected water will be extracted from two proposed extraction wells (KAFB-106EX1 and KAFB-106EX2) installed as part of the in-situ bioremediation pilot test at SWMU ST-I 06/SS-111. The extracted water will be amended with inorganic nutrients prior to injection.

- The method of measurement of water injected:
  - The amount of water entering the injection well will be measured using a flow meter (both instantaneous and total flow will be logged).

- The characteristics of the aquifer:
  - The aquifer is primarily comprised of unconsolidated sand and gravel, with an average hydraulic conductivity of 63 feet/day.

- The method of determining the resulting annual consumptive use of water and depletion from any related stream system:
  - Groundwater extracted from KAFB-106EX1 and KAFB-106EX2 are each projected to be extracted at a rate of up to 25 gallons per minute, equivalent to 40 acre-feet per year per well. The groundwater will be metered as it is extracted from the aquifer and pumped to the recirculation system, and will be metered as the amended groundwater is injected into the aquifer well KAFB-106IN1. The volume removed from the extraction wells will be equal to the amount injected into the aquifer; therefore, there is no consumptive use.

- Proof of any permit required from the New Mexico Environment Department (NMED):
  - The NMED/Hazardous Waste Bureau and Ground Water Quality Bureau has determined that a discharge permit will not be required for the short-term in-situ pilot test. If the pilot test is successful, then Kirtland AFB will work with NMED to identify any permits required if a full-scale system is to be designed and implemented.

- An access agreement if the applicant is not the owner of the land on which the pollution plume control or recovery well is to be located:
  - Kirtland AFB is the landowner.

STATE ENGINEERS OFFICE
ALBUQUERQUE, NEW MEXICO
2016 AUG -8 PM 12: 41

In addition to the application, this packet contains a summary of the well construction for the extraction and injection wells, and a figure showing the well locations. The well construction details may be subject to change.

Please contact Mr. L. Wayne Bitner at (505) 853-3484 or at ludie.bitner@us.af.mil or Mr. Scott Clark at (505) 846-9017 or at scott.clark@us.af.mil if you have any questions.

Sincerely

ERIC H. FROEHLICH, Colonel, USAF
Commander

Attachment:
WR07 Application for Permit to Drill Wells with No Consumptive Use of Water

cc:
AFCEC/CZ (Bodour, Bitner, Clark), letter only
USACE-Omaha District Office (Ellender), letter only
USACE-ABQ District Office (Simpler, Phaneuf, Dreeland, Sanchez, Salazar), letter only
Public Info Repository, Administrative Record/Information Repository (AR/IR) and File

STATE ENGINEERS OFFICE
ALBUQUERQUE, NEW MEXICO
2016 AUG -8 PM 12: 41

STATE OF NEW MEXICO
OFFICE OF THE STATE ENGINEER

DISTRICT I

TOM BLAINE, P.E.
STATE ENGINEER

5550 San Antonio Dr. NE
Albuquerque, NM 87109-4127
(505) 383-4000

November 17, 2016

File No: RG-1579
Permit No. RG-1579 PODs 325-328

Kirtland Air Force Base
c/o Wayne Bitner, Chief Environmental Restoration
AFCEC/Kirtland AFB IST; Bldg 20685
2050 Wyoming Blvd SE
Kirtland AFB, NM 87117

Greetings:

Your copy of Permit to Drill Monitoring Wells RG-1579 PODs 325-328, which has been approved in accordance with the attached Conditions of Approval, is enclosed.

Sincerely,

Sharon Kindel
Water Resource Master

Enclosures

File No. R6-1579

NEW MEXICO OFFICE OF THE STATE ENGINEER

APPLICATION FOR PERMIT TO DRILL A WELL WITH NO CONSUMPTIVE USE OF WATER

HC1-55662
$20

(check applicable box):

For fees, see State Engineer website: http://www.ose.state.nm.us/

Purpose:	☐ Pollution Control And / Or Recovery	☐ Geo-Thermal
☐ Exploratory	☐ Construction Site De-Watering	☐ Other (Describe):
☒ Monitoring	☐ Mineral De-Watering	

A separate permit will be required to apply water to beneficial use.

☐ Temporary Request - Requested Start Date: Requested End Date:

Plugging Plan of Operations Submitted? ☐ Yes ☒ No

STATE ENGINEER'S OFFICE ALBUQUERQUE, NEW MEXICO 2016 NOV 10 PM 1:59

1. APPLICANT(S)

Name: **Kirtland Air Force Base**	Name:
Contact or Agent: check here if Agent ☒ **Wayne Bitner, Chief Environmental Restoration**	Contact or Agent: check here if Agent ☐
Mailing Address: **AFCEC/Kirtland AFB IST; Bldg 20685; 2050 Wyoming Blvd SE**	Mailing Address:
City: **Kirtland AFB**	City:
State: **NM** Zip Code:**87117**	State: Zip Code:
Phone: N/A Home Cell Phone (Work):**505-853-3484**	Phone: Home Cell Phone (Work):
E-mail (optional):**ludie.bitner@us.af.mil**	E-mail (optional):

FOR OSE INTERNAL USE

Application for Permit, Form wr-07, Rev 4/12/12

File Number: R6-1579	Tm Number: 598815
Trans Description (optional): PODs 325-328	
Sub-Basin: MRG	
PCW/LOG Due Date: 12/7/17	

2. WELL(S) Describe the well(s) applicable to this application.

Location Required: Coordinate location must be reported in NM State Plane (NAD 83), UTM (NAD 83), or Latitude/Longitude (Lat/Long - WGS84).
District II (Roswell) and District VII (Cimarron) customers, provide a PLSS location in addition to above.

☒ NM State Plane (NAD83) (Feet)
☐ NM West Zone
☐ NM East Zone
☒ NM Central Zone

☐ UTM (NAD83) (Meters)
☐ Zone 12N
☐ Zone 13N

☐ Lat/Long (WGS84) (to the nearest 1/10th of second)

Well Number (if known):	X or Easting or Longitude:	Y or Northing or Latitude:	Provide if known: -Public Land Survey System (PLSS) (*Quarters or Halves , Section, Township, Range*) OR - Hydrographic Survey Map & Tract; OR - Lot, Block & Subdivision; OR - Land Grant Name
KAFB-106MW1-S	1542329.391	1473729.014	
KAFB-106MW1-I	1542329.391	1473729.014	
KAFB-106MW2-S	1542340.467	1473757.397	
KAFB-106MW2-I	1542340.467	1473757.397	

NOTE: If more well locations need to be described, complete form WR-08 (Attachment 1 – POD Descriptions)
Additional well descriptions are attached: ☐ **Yes** ☒ **No** **If yes, how many**_____

Other description relating well to common landmarks, streets, or other: **See attached Figure 1**

Well is on land owned by: **Kirtland Air Force Base**

Well Information: NOTE: If more than one (1) well needs to be described, provide attachment. Attached? ☒ **Yes** ☐ **No**
If yes, how many **4 wells**

Approximate depth of well (feet): approximately 535 feet bgs	Outside diameter of well casing (inches): See attachment
Driller Name: TBD	Driller License Number: TBD

STATE ENGINEER'S OFFICE
ALBUQUERQUE, NEW MEXICO
2016 NOV 10 PM 1:59

3. ADDITIONAL STATEMENTS OR EXPLANATIONS

Please see attachments for well locations and installation details. The four groundwater monitoring wells will be installed within two boreholes utilizing a nested design, with two wells in each borehole. The well locations and design of the groundwater monitoring wells were selected to evaluate EDB biodegradation during the pilot test.

FOR OSE INTERNAL USE

File Number:	Trn Number:

4. SPECIFIC REQUIREMENTS: The applicant must include the following, as applicable to each well type. Please check the appropriate boxes, to indicate the information has been included and/or attached to this application:

Exploratory: ☐ Include a description of any proposed pump test, if applicable.	**Pollution Control and/or Recovery:** ☐ Include a plan for pollution control/recovery, that includes the following: ☐ A description of the need for the pollution control or recovery operation. ☐ The estimated maximum period of time for completion of the operation. ☐ The annual diversion amount. ☐ The annual consumptive use amount. ☐ The maximum amount of water to be diverted and injected for the duration of the operation. ☐ The method and place of discharge. ☐ The method of measurement of water produced and discharged. ☐ The source of water to be injected. ☐ The method of measurement of water injected. ☐ The characteristics of the aquifer. ☐ The method of determining the resulting annual consumptive use of water and depletion from any related stream system. ☐ Proof of any permit required from the New Mexico Environment Department. ☐ An access agreement if the applicant is not the owner of the land on which the pollution plume control or recovery well is to be located.	**Construction De-Watering:** ☐ Include a description of the proposed dewatering operation, ☐ The estimated duration of the operation, ☐ The maximum amount of water to be diverted, ☐ A description of the need for the dewatering operation, and, ☐ A description of how the diverted water will be disposed of.	**Mine De-Watering:** ☐ Include a plan for pollution control/recovery, that includes the following: ☐ A description of the need for mine dewatering. ☐ The estimated maximum period of time for completion of the operation. ☐ The source(s) of the water to be diverted. ☐ The geohydrologic characteristics of the aquifer(s). ☐ The maximum amount of water to be diverted per annum. ☐ The maximum amount of water to be diverted for the duration of the operation. ☐ The quality of the water. ☐ The method of measurement of water diverted. ☐ The recharge of water to the aquifer. ☐ Description of the estimated area of hydrologic effect of the project. ☐ The method and place of discharge. ☐ An estimation of the effects on surface water rights and underground water rights from the mine dewatering project. ☐ A description of the methods employed to estimate effects on surface water rights and underground water rights. ☐ Information on existing wells, rivers, springs, and wetlands within the area of hydrologic effect.
Monitoring: ☒ Include the reason for the monitoring well, and, ☒ The duration of the planned monitoring.		**Geo-Thermal:** ☐ Include a description of the geothermal heat exchange project, ☐ The amount of water to be diverted and re-injected for the project, ☐ The time frame for constructing the geothermal heat exchange project, and, ☐ The duration of the project. ☐ Preliminary surveys, design data, and additional information shall be included to provide all essential facts relating to the request.	

ACKNOWLEDGEMENT

I, We (name of applicant(s)), ERIC H. FROEHLICH, COLONEL, USAF, 377 ABW COMMANDER
Print Name(s)

affirm that the foregoing statements are true to the best of (my, our) knowledge and belief.

Applicant Signature Applicant Signature

STATE ENGINEER'S OFFICE
ALBUQUERQUE, NEW MEXICO
2016 NOV 10 PM 2:00

ACTION OF THE STATE ENGINEER

This application is:

☒ approved ☐ partially approved ☐ denied

provided it is not exercised to the detriment of any others having existing rights, and is not contrary to the conservation of water in New Mexico nor detrimental to the public welfare and further subject to the attached conditions of approval.

Witness my hand and seal this 17th day of November 20 16, for the State Engineer,

Tom Blaine, P.E.
State Engineer, State Engineer

By: Sharon Kindel Sharon Kindel
Signature Print

Title: Water Resource Master
Print

FOR OSE INTERNAL USE Application for Permit, Form wr-07

File Number:	Trn Number:

NEW MEXICO OFFICE OF THE STATE ENGINEER
PERMIT TO DRILL MONITORING WELLS
CONDITIONS OF APPROVAL

This application is approved provided it is not exercised to the detriment of any others having existing rights, and is not contrary to the conservation of water in New Mexico nor detrimental to the public welfare of the state; and further subject to the following conditions of approval:

Permittee: Kirtland Air Force Base

Permit Number: RG-1579 PODs 325-328

Application File Date: November 10, 2016

Monitoring Wells/Points of Diversion (PODs):

OSE POD No.	KAFB Well No.	NM State Plane (NAD83) NM Central Zone (feet)	
		X	Y
RG-1579 POD325	KAFB-106MW1-S	1542329.4	1473729.0
RG-1579 POD326	KAFB-106MW1-I	1542329.4	1473729.0
RG-1579 POD327	KAFB-106MW2-S	1542340.5	1473757.4
RG-1579 POD328	KAFB-106MW2-I	1542340.5	1473757.4

1. No water shall be appropriated and beneficially used under this permit.

2. Water shall be used from wells for monitoring purposes only unless and until a permit for a specific use has been issued by the State Engineer.

3. The wells shall be drilled and constructed by a driller licensed in the State of New Mexico in accordance with 19.27.4 NMAC.

4. If artesian water is encountered, the Permittee and driller shall comply with Subsection C of 19.27.4.31 NMAC.

5. The wells shall be drilled and completed within one year of issuance of this permit. Well Records for RG-1579 PODs 325-328 shall be filed no later than twenty (20) days after completion of the wells in accordance with Subsection K of 19.27.4.29 NMAC (i.e. due by December 7, 2017).

6. Upon completion of permitted use, the wells shall be plugged under State Engineer-approved Plugging Plans, and Plugging Records shall be filed with the State Engineer within twenty (20) days after the wells are plugged in accordance with Subsection C of 19.27.4.30 NMAC.

Witness my hand and seal this 17th day of November 2016.

Tom Blaine, P.E., State Engineer

By: Sharon Kindel

Sharon Kindel, Water Resource Master

DEPARTMENT OF THE AIR FORCE
377TH AIR BASE WING (AFGSC)

Colonel Dawn A. Nickell
377 ABW/CV
2000 Wyoming Blvd SE
Kirtland AFB NM 87117-5000

OCT 26 2016

Office of the State Engineer
c/o Christopher Burrus, Water Rights Division
5550 San Antonio Blvd. NE
Albuquerque New Mexico 87109

Dear Mr. Burrus

Kirtland Air Force Base is requesting to terminate the permit to "Drill a Well with No Consumptive Use of Water" for Points of Diversion (PODs) 314 and 315 under the RG-1579 water right. In the time since the application was approved, the New Mexico Environment Department Hazardous Waste Bureau determined that the proposed groundwater monitoring wells shall utilize a nested well design. Two casing strings will be installed within the borehole to assess conditions within the shallow and intermediate aquifer zones. Each of the two original monitoring locations will contain two nested wells for a total of four groundwater monitoring wells.

A subsequent "Application for Permit to Drill a Well with No Consumptive Use of Water" will be submitted to the Office of the State Engineer and will contain the new well identification numbers and well construction details.

If you have any question or concerns, please contact Mr. Wayne Bitner at (505) 853-3484 or at ludie.bitner@us.af.mil or Mr. Scott Clark at (505) 846-9017 or at scott.clark@us.af.mil.

Sincerely

DAWN A. NICKELL, Colonel, USAF
Vice Commander

cc:
AFCEC-CZRX (Bodour), letter only
USACE-Omaha District Office (Ellender), letter only
USACE-ABQ District Office (Simpler, Phaneuf), letter only
Public Info Repository, AR/IR, and File

File Number: _____
(For OSE Use Only)

NEW MEXICO OFFICE OF THE STATE ENGINEER
TOTALIZING METER REPORT

1. PERMITTEE

*OSE File/Permit Number: RG-1579 POD 316
Name: Kirtland Air Force Base
Work Phone: 505-846-9017
Contact: Scott Clark
Home Phone:
Address: 2050 Wyoming Blvd SE
Cell Phone: 505-385-3679
City: Albuquerque
Fax:
State: NM Zip: 87117 E-mail (optional): scott.clark@us.af.mil

2. LOCATION OF WELL

*OSE Well/POD Number: POD 316
a. (___)1/4 (___)1/4 (___)1/4 Section(s):(_____)Township :(_____)Range :(_____)N.M.P.M.
b. _____ Subdivision
c. Latitude:_____d _____m _____s Longitude:_____d _____m _____s
d. Latitude:_____ (____) Longitude:_____ (____)
e. East 1542418.47 (m), North 1473782.33 (m), UTM Zone 13, NAD (__)27 or (✔) 83

3. PURPOSE OF USE

(_) Domestic (_) Livestock (_) Irrigation (_) Municipal (_) Commercial (_) Industrial ✔) Other: Pollution Control and Recovery

4. FLOW METER DATA

*Serial Number: 61608100437
Make: Georg Fischer Signet LLC
Total # of Dials: 8
Model: Signet 2551 Magmeter, 3-2551-P0-42
Multiplier: **x (1)**
Meter Size: 3.75 inch diameter
Units: (_) Acre-feet (_) Barrels (_) Cubit-feet (✔) Gallons Other:
Fixed Numbers (Check one): **0** (__) or **00** (__) or **000** (__) or **none** (✔)

5. METER READING

*Reading Date: 7 / 17 / 2017
*Actual Meter Reading
(All numbers dials and fixed included): **00005185**

6. ADDITIONAL STATEMENTS OR EXPLANATIONS:

Pictures of all three flow meters and the manufacturer calibration reports are included with this report.

*Submitted by: Caitlin LaChance, APTIM
Date: 7 / 26 / 2017

INSTRUCTIONS:
Specific questions should be answered as follows:

(4) -**Serial Number** is printed on top of lid of meter cover, meter body or meter flange
(5) -**Total # of Dials** is the number of dials that move on register
(6) -**Fixed Numbers** is the number of zeroes that do not move on register
-If you have a trouble trying to find the rest of the meter data required under this section, see **Illustration 1**
Please submit readings of **all digits** of register and **date of the reading**
Under comments, give any pertinent information concerning repair of meter, dates out of service, etc.

* **This is a mandatory item** and must be filled in with each meter reading reported. **If a meter has been replaced**, you have to **completely fill** this form and provide this office with **initial reading** and **date of installation** of the new installed meter, and **last reading** of the replaced meter.

Do Not Write Below This Line

File Number: _____ Trn Number: _____

Form: wr-26

3-2551-P0-42
CODE:159001279
SN:61608100437

+GF+
Signet Magmeter
ENTER

Georg Fischer Signet LLC
Signet 2551 Magmeter

+GF+

Test Certificate

Part Information

Mfr. part #: 3-2551-P0-42
Type: PP/316L SS; mA output
Serial number: 61608100437
Calibration date: August 10, 2016

Test Data

Test media: Water
Pipe type: SYGEF PVDF d50
Pipe fitting: PVDF Tee d50, SFMT015
Output jumper: S³L (applies to 3-2551-XX-X1 only)
Pipe size jumper: Off

Flow Velocity ft/s (m/s)	Flow Velocity ft/s (m/s)	Flow Velocity ft/s (m/s)
Reynolds Number Linearity (% of reading)	Reynolds Number Linearity (% of reading)	Reynolds Number Linearity (% of reading)
10.18 (3.10)	10.18 (3.10)	10.18 (3.10)

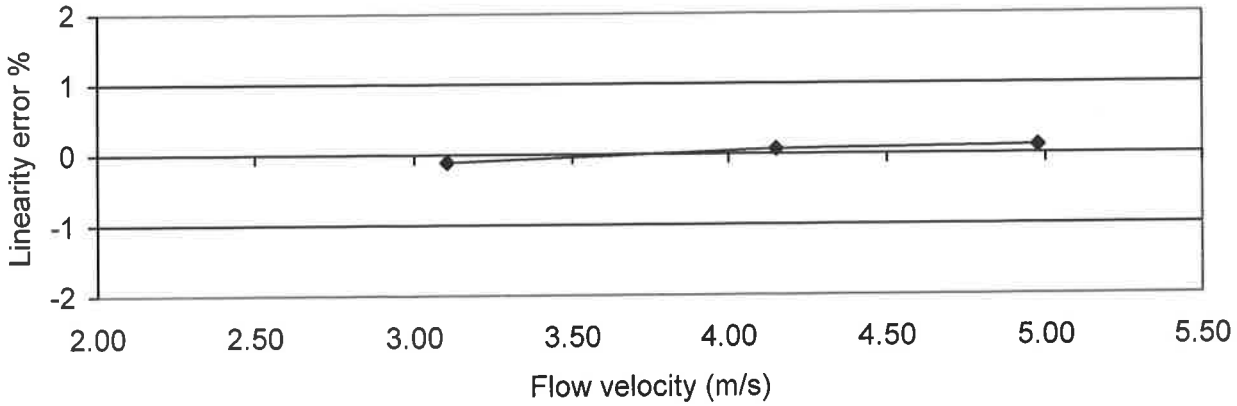

Refer to Signet 2551 Magmeter manual (PN 3-2551.090 or 3-2551.090-1) for technical specification.

Georg Fischer Signet LLC certifies that the reference used in the calibration of this product is traceable to NIST (National Institute of Standards and Technology). Improper handling may adversely affect the accuracy.

Georg Fischer Signet LLC products are manufactured under ISO 9001 for Quality and ISO 14001 for Environmental Management.

Georg Fischer Signet LLC
3401 Aero Jet Avenue
El Monte, CA 91731-2882
www.gfsignet.com

File Number: _____
(For OSE Use Only)

NEW MEXICO OFFICE OF THE STATE ENGINEER
TOTALIZING METER REPORT

1. PERMITTEE

*OSE File/Permit Number: RG-1579 POD 316
Name: Kirtland Air Force Base
Work Phone: 505-846-9017
Contact: Scott Clark
Home Phone:
Address: 2050 Wyoming Blvd SE
Cell Phone: 505-385-3679
City: Albuquerque
Fax:
State: NM Zip: 87117 E-mail (optional): scott.clark@us.af.mil

2. LOCATION OF WELL

*OSE Well/POD Number: POD 316
a. (___)1/4 (___)1/4 (___)1/4 Section(s):(_____)Township :(_____)Range :(_____)N.M.P.M.
b. _____ Subdivision
c. Latitude:_____d _____m _____s Longitude:_____d _____m _____s
d. Latitude:_____ (____) Longitude:_____ (____)
e. East 1542418.47 (m), North 1473782.33 (m), UTM Zone 13, NAD (__)27 or (✔) 83

3. PURPOSE OF USE

(_) Domestic (_) Livestock (_) Irrigation (_) Municipal (_) Commercial (_) Industrial ✔) Other: Pollution Control and Recovery

4. FLOW METER DATA

*Serial Number: 61608100437
Make: Georg Fischer Signet LLC
Total # of Dials: 8
Model: Signet 2551 Magmeter, 3-2551-P0-42
Multiplier: **x (1)**
Meter Size: 3.75 inch diameter
Units: (_) Acre-feet (_) Barrels (_) Cubit-feet (✔) Gallons Other:
Fixed Numbers (Check one): **0** (__) or **00** (__) or **000** (__) or **none** (✔)

5. METER READING

*Reading Date: 7 / 17 / 2017
*Actual Meter Reading
(All numbers dials and fixed included): **00005185**

6. ADDITIONAL STATEMENTS OR EXPLANATIONS:

Pictures of all three flow meters and the manufacturer calibration reports are included with this report.

*Submitted by: Caitlin LaChance, APTIM
Date: 7 / 26 / 2017

INSTRUCTIONS:
Specific questions should be answered as follows:

(4) -**Serial Number** is printed on top of lid of meter cover, meter body or meter flange
(5) -**Total # of Dials** is the number of dials that move on register
(6) -**Fixed Numbers** is the number of zeroes that do not move on register
-If you have a trouble trying to find the rest of the meter data required under this section, see **Illustration 1**
Please submit readings of **all digits** of register and **date of the reading**
Under comments, give any pertinent information concerning repair of meter, dates out of service, etc.

* **This is a mandatory item** and must be filled in with each meter reading reported. **If a meter has been replaced**, you have to **completely fill** this form and provide this office with **initial reading** and **date of installation** of the new installed meter, and **last reading** of the replaced meter.

Do Not Write Below This Line

File Number: _____ Trn Number: _____

Form: wr-26

3-2551-PO-42
CODE: 159001279
SN: 61608100434
3-6050.615/B

+GF+
-0.1 GPM
Signet Magmeter
ENTER

Georg Fischer Signet LLC
Signet 2551 Magmeter

+GF+

Test Certificate

Part Information

Mfr. part #: 3-2551-P0-42
Type: PP/316L SS; mA output
Serial number: 61608100434
Calibration date: August 11, 2016

Test Data

Test media: Water
Pipe type: SYGEF PVDF d50
Pipe fitting: PVDF Tee d50, SFMT015
Output jumper: S³L (applies to 3-2551-XX-X1 only)
Pipe size jumper: Off

Flow Velocity ft/s (m/s)	Flow Velocity ft/s (m/s)	Flow Velocity ft/s (m/s)
Reynolds Number Linearity (% of reading) 9.94 (3.03)	Reynolds Number Linearity (% of reading) 9.94 (3.03)	Reynolds Number Linearity (% of reading) 9.94 (3.03)

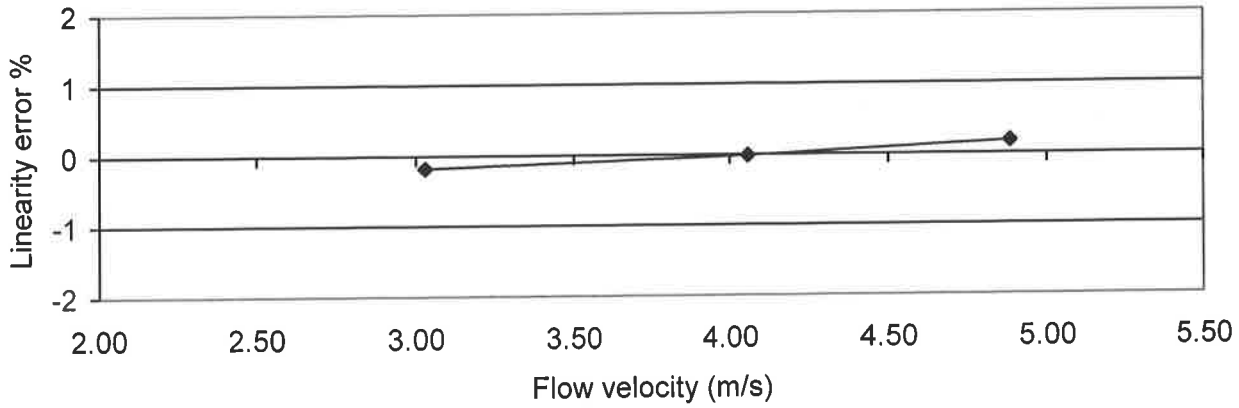

Refer to Signet 2551 Magmeter manual (PN 3-2551.090 or 3-2551.090-1) for technical specification.

Georg Fischer Signet LLC certifies that the reference used in the calibration of this product is traceable to NIST (National Institute of Standards and Technology). Improper handling may adversely affect the accuracy.

Georg Fischer Signet LLC products are manufactured under ISO 9001 for Quality and ISO 14001 for Environmental Management.

Georg Fischer Signet LLC
3401 Aero Jet Avenue
El Monte, CA 91731-2882
www.gfsignet.com

File Number: _____
(For OSE Use Only)

NEW MEXICO OFFICE OF THE STATE ENGINEER
TOTALIZING METER REPORT

1. PERMITTEE

*OSE File/Permit Number: RG-1579 POD 316
Name: Kirtland Air Force Base
Contact: Scott Clark
Address: 2050 Wyoming Blvd SE
City: Albuquerque
State: NM Zip: 87117
Work Phone: 505-846-9017
Home Phone:
Cell Phone: 505-385-3679
Fax:
E-mail (optional): scott.clark@us.af.mil

2. LOCATION OF WELL

*OSE Well/POD Number: POD 316
a. (___)1/4 (___)1/4 (___)1/4 Section(s):(_____)Township :(_____)Range :(_____)N.M.P.M.
b. _____ Subdivision
c. Latitude:_____d _____m _____s Longitude:_____d _____m _____s
d. Latitude:_____ (____) Longitude:_____ (____)
e. East 1542418.47 (m), North 1473782.33 (m), UTM Zone 13, NAD (__)27 or (✔) 83

3. PURPOSE OF USE

(_) Domestic (_) Livestock (_) Irrigation (_) Municipal (_) Commercial (_) Industrial ✔) Other: Pollution Control and Recovery

4. FLOW METER DATA

*Serial Number: 61608100437
Make: Georg Fischer Signet LLC
Total # of Dials: 8
Model: Signet 2551 Magmeter, 3-2551-P0-42
Multiplier: **x (1)**
Meter Size: 3.75 inch diameter
Units: (_) Acre-feet (_) Barrels (_) Cubit-feet (✔) Gallons Other:
Fixed Numbers (Check one): **0** (__) or **00** (__) or **000** (__) or **none** (✔)

5. METER READING

*Reading Date: 7 / 17 / 2017
*Actual Meter Reading
(All numbers dials and fixed included): **00005185**

6. ADDITIONAL STATEMENTS OR EXPLANATIONS:

Pictures of all three flow meters and the manufacturer calibration reports are included with this report.

*Submitted by: Caitlin LaChance, APTIM
Date: 7 / 26 / 2017

INSTRUCTIONS:
Specific questions should be answered as follows:

(4) -**Serial Number** is printed on top of lid of meter cover, meter body or meter flange
(5) -**Total # of Dials** is the number of dials that move on register
(6) -**Fixed Numbers** is the number of zeroes that do not move on register
-If you have a trouble trying to find the rest of the meter data required under this section, see **Illustration 1**
Please submit readings of **all digits** of register and **date of the reading**
Under comments, give any pertinent information concerning repair of meter, dates out of service, etc.

* **This is a mandatory item** and must be filled in with each meter reading reported. **If a meter has been replaced**, you have to **completely fill** this form and provide this office with **initial reading** and **date of installation** of the new installed meter, and **last reading** of the replaced meter.

Do Not Write Below This Line

File Number: _____ Trn Number: _____

Form: wr-26

+GF+
0.0 GPM
00017802
Signet Magmeter
ENTER

Georg Fischer Signet LLC
Signet 2551 Magmeter

+GF+

Test Certificate

Part Information

Mfr. part #: 3-2551-P0-42
Type: PP/316L SS; mA output
Serial number: 61608120851
Calibration date: August 13, 2016

Test Data

Test media: Water
Pipe type: SYGEF PVDF d50
Pipe fitting: PVDF Tee d50, SFMT015
Output jumper: S^3L (applies to 3-2551-XX-X1 only)
Pipe size jumper: Off

Flow Velocity ft/s (m/s)	Flow Velocity ft/s (m/s)	Flow Velocity ft/s (m/s)
Reynolds Number Linearity (% of reading)	Reynolds Number Linearity (% of reading)	Reynolds Number Linearity (% of reading)
9.91 (3.02)	9.91 (3.02)	9.91 (3.02)

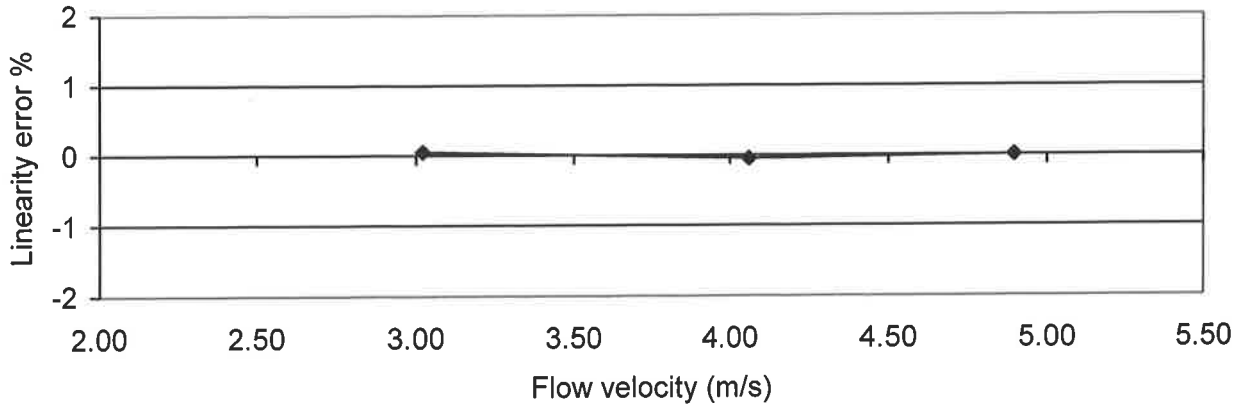

Refer to Signet 2551 Magmeter manual (PN 3-2551.090 or 3-2551.090-1) for technical specification.

Georg Fischer Signet LLC certifies that the reference used in the calibration of this product is traceable to NIST (National Institute of Standards and Technology). Improper handling may adversely affect the accuracy.

Georg Fischer Signet LLC products are manufactured under ISO 9001 for Quality and ISO 14001 for Environmental Management.

Georg Fischer Signet LLC
3401 Aero Jet Avenue
El Monte, CA 91731-2882
www.gfsignet.com

Extraction Well Completion Diagram KAFB-106EX1

Installation Start Date/Time: 3/3/17@1206
Installation End Date/Time: 3/12/17@1625
Completion Date: 4/19/17

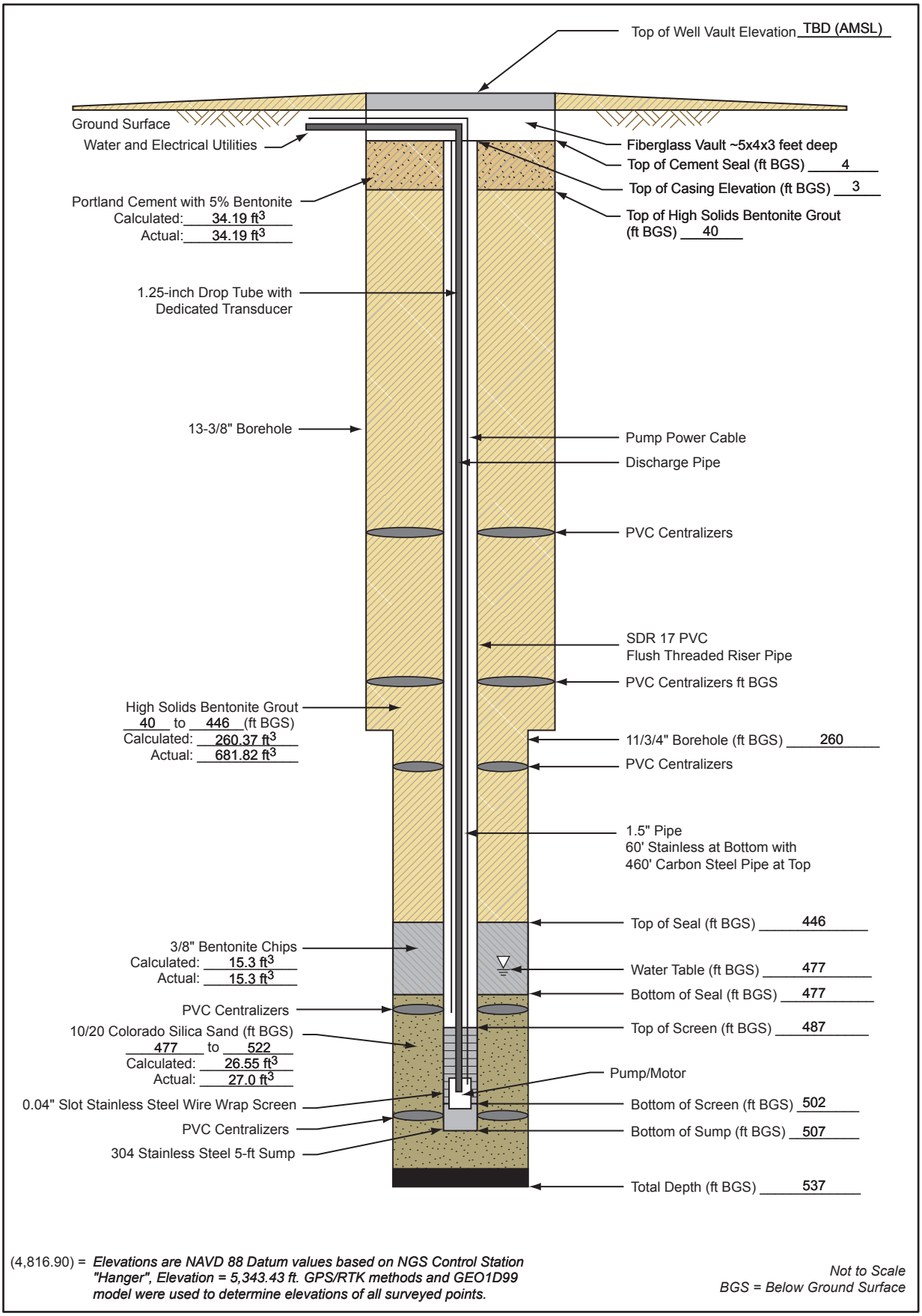

(4,816.90) = *Elevations are NAVD 88 Datum values based on NGS Control Station "Hanger", Elevation = 5,343.43 ft. GPS/RTK methods and GEO1D99 model were used to determine elevations of all surveyed points.*

Not to Scale
BGS = Below Ground Surface

500433_03050100_A7

Borehole ID: KAFB-106EX1

Client: US Army Corps of Engineers
Project Location: KAFB, Albuquerque, NM
Project Name: KAFB RAPID SWMU ST-106/SS-111
Project Number: 500433

Date Started: 3/3/2017
Date TD Reached: 3/12/2017
Date Completed: 4/19/2017

Ground Elevation AMSL (ft): Not Recorded
Y Coordinate:
X Coordinate:

Hole Diameter Upper (in.): 13-3/8
Hole Diameter Lower (in.): 11-3/4
Surface Completion Type: Vault

Groundwater Levels BGS (ft):
At Time of Drilling: 477.00
At End of Drilling: Not Recorded
After Drilling: 479.00

Drillling Contractor: Cascade Drilling
Drilling Method: Air Rotary Casing Hammer
Logged By: T. Richards/T. Kunkel

Depth (ft)	Sample Type	Number	Headspace PID	Lithologic Log	Material Description	U.S.C.S.	Well Diagram	Remarks
0					No Lithologic Description.		Vault; Top of Casing; Top of Portland Cement with Bentonite	Borehole was pot holed with air knife to 5 feet bgs. No cuttings returned.
5					SILT with Gravel (ML); brown (7.5YR 4/4); 75% silt; 25% fine gravel to 3/4"; subangular to subrounded; trace sand. Note: gravel is granitic.			Began drilling with 13-3/8 inch casing @ 1206 on 3/3/17. Using under reamer.
10					Same as above (5 ft).			PID = 0.0 ppm @ cyclone and breathing zone (BZ).
15							Portland Cement with Bentonite	
20					Gravelly SILT (ML); brown (7.5YR 4/4); 60% silt; 40% coarse gravel to 2"; subangular to subrounded. Note: method of drilling is causing gravel to fracture.	ML		PID = 0.1 ppm @ cyclone and 0.0 ppm @ BZ. Kelly down @ 1212, new 20' connection @ 1231.
25					SILT with Gravel (ML); reddish brown (5YR 5/3); 80% silt; 20% gravel; subangular; trace coarse sand. Note: some fractured gravel.			Water added @ cyclone for dust suppression.
30					Lean CLAY with Gravel (CL); reddish brown (5YR 5/3); nonplastic; 80% clay; 20% fine gravel; subangular.	CL		

BOREHOLE_LOG - CB&I_DRILLING.GDT - 5/9/17 16:19 - Z:\KAFB RAPID\GINT\KAFB_RAPID_11-1-2016.GPJ

Borehole ID: KAFB-106EX1

Client: US Army Corps of Engineers
Project Location: KAFB, Albuquerque, NM
Project Name: KAFB RAPID SWMU ST-106/SS-111
Project Number: 500433

Date Started: 3/3/2017
Date TD Reached: 3/12/2017
Date Completed: 4/19/2017

Ground Elevation AMSL (ft): Not Recorded
Y Coordinate:
X Coordinate:

Hole Diameter Upper (in.): 13-3/8
Hole Diameter Lower (in.): 11-3/4
Surface Completion Type: Vault

Groundwater Levels BGS (ft):
At Time of Drilling: 477.00
At End of Drilling: Not Recorded
After Drilling: 479.00

Drillling Contractor: Cascade Drilling
Drilling Method: Air Rotary Casing Hammer
Logged By: T. Richards/T. Kunkel

Depth (ft)	Sample Type	Number	Headspace PID	Lithologic Log	Material Description	U.S.C.S.	Well Diagram	Remarks
30					Lean CLAY with Gravel (CL); reddish brown (5YR 5/3); nonplastic; 80% clay; 20% fine gravel; subangular.	CL		PID = 0.0 ppm @ cyclone and BZ.
					SILT with Sand (ML); light brown (7.5YR 6/4); 85% silt; 15% fine to coarse sand; subangular to subrounded.			
35							Portland Cement with Bentonite	
					Same as above (31 ft).			Kelly down @ 1242, new 20' connection @ 1253.
40							Top of High Solids Bentonite Grout	Water added at cyclone.
					SILT (ML); light brown (7.5YR 6/3); 90% silt; 10% coarse sand; subangular to subrounded; trace gravel.			
45						ML		
					Same as above (42 ft).			No hammering.
50					Same as above (42 ft); 10% gravel to 1/8"; subangular.			PID = 0.0 ppm @ cyclone and BZ.
55					Same as above (42 ft); 10% gravel to 1/8"; subangular.			
60								Kelly down @ 1328; trip out drill rod, add drill collars and 2 stabilizers. New 20' connection @

BOREHOLE_LOG - CB&I_DRILLING.GDT - 5/9/17 16:19 - Z:\KAFB RAPID\GINT\KAFB_RAPID_11-1-2016.GPJ

Borehole ID: KAFB-106EX1

Client: US Army Corps of Engineers
Project Location: KAFB, Albuquerque, NM
Project Name: KAFB RAPID SWMU ST-106/SS-111
Project Number: 500433

Date Started: 3/3/2017
Date TD Reached: 3/12/2017
Date Completed: 4/19/2017

Ground Elevation AMSL (ft): Not Recorded
Y Coordinate:
X Coordinate:

Hole Diameter Upper (in.): 13-3/8
Hole Diameter Lower (in.): 11-3/4
Surface Completion Type: Vault

Groundwater Levels BGS (ft):
At Time of Drilling: 477.00
At End of Drilling: Not Recorded
After Drilling: 479.00

Drillling Contractor: Cascade Drilling
Drilling Method: Air Rotary Casing Hammer
Logged By: T. Richards/T. Kunkel

Depth (ft)	Sample Type	Number	Headspace PID	Lithologic Log	Material Description	U.S.C.S.	Well Diagram	Remarks
60					SILT (ML); brown (7.5YR 5/4); 90% silt; trace clay; 10% fine gravel to 3/4"; subangular.	ML	High Solids Bentonite Grout	1433. Hammering.
65					Same as above (60 ft).			PID = 0.0 ppm @ cyclone and BZ.
70					SILT with Sand (ML); light brown (7.5YR 6/4); 75% silt; 20% fine to coarse sand; subangular to subrounded; 5% fine gravel to 3/4"; subangular to subrounded.			
75					Same as above (70 ft).			Hammering. Kelly down @ 1453, new 20' connection @ 1514.
80					Same as above (70 ft).			
85					Same as above (70 ft); 75% silt; 25% fine to coarse sand.			PID = 0.0 ppm @ cyclone and BZ. Water added at cyclone for dust suppression; hammering.
90								

BOREHOLE_LOG - CB&I_DRILLING.GDT - 5/9/17 16:19 - Z:\KAFB RAPID\GINT\KAFB_RAPID_11-1-2016.GPJ

Borehole ID: KAFB-106EX1

Client: US Army Corps of Engineers
Project Location: KAFB, Albuquerque, NM
Project Name: KAFB RAPID SWMU ST-106/SS-111
Project Number: 500433

Date Started: 3/3/2017
Date TD Reached: 3/12/2017
Date Completed: 4/19/2017

Ground Elevation AMSL (ft): Not Recorded
Y Coordinate:
X Coordinate:

Hole Diameter Upper (in.): 13-3/8
Hole Diameter Lower (in.): 11-3/4
Surface Completion Type: Vault

Groundwater Levels BGS (ft):
At Time of Drilling: 477.00
At End of Drilling: Not Recorded
After Drilling: 479.00

Drillling Contractor: Cascade Drilling
Drilling Method: Air Rotary Casing Hammer
Logged By: T. Richards/T. Kunkel

Depth (ft)	Sample Type	Number	Headspace PID	Lithologic Log	Material Description	U.S.C.S.	Well Diagram	Remarks
90					SILT (ML); reddish brown (5YR 5/3); 90% silt; 5% fine to coarse sand; 5% gravel; subangular to subrounded.	ML		Hammering intermittently.
95					Same as above (90 ft).			Kelly down @ 1528, new 20' connection @ 1537.
100					Silty SAND (SM); brown (7.5YR 5/3); 60% fine sand; subrounded to rounded; trace fine gravel; 40% silt.	SM		Hammering intermittently.
105					Same as above (99 ft).		High Solids Bentonite Grout	PID = 0.0 ppm @ cyclone and BZ.
110					Same as above (99 ft); 80% fine to coarse sand; trace gravel; 20% silt.			Hammering intermittently. Water added at cyclone for dust suppression.
115					Same as above (99 ft); 80% fine to coarse sand; trace gravel; 20% silt.			Kelly down @ 1551, new 20' connection @ 1613.
					Well-graded SAND (SW); pale brown (10YR 6/3); 90% fine to coarse sand; subangular to subrounded; 10% fine gravel to 3/4"; subangular to subrounded; trace silt.	SW		
120					Description on next page.	SM		

BOREHOLE_LOG - CB&I_DRILLING.GDT - 5/9/17 16:19 - Z:\KAFB RAPID\GINT\KAFB_RAPID_11-1-2016.GPJ

Borehole ID: KAFB-106EX1

Client: US Army Corps of Engineers
Project Location: KAFB, Albuquerque, NM
Project Name: KAFB RAPID SWMU ST-106/SS-111
Project Number: 500433

Date Started: 3/3/2017
Date TD Reached: 3/12/2017
Date Completed: 4/19/2017

Ground Elevation AMSL (ft): Not Recorded
Y Coordinate:
X Coordinate:

Hole Diameter Upper (in.): 13-3/8
Hole Diameter Lower (in.): 11-3/4
Surface Completion Type: Vault

Groundwater Levels BGS (ft):
At Time of Drilling: 477.00
At End of Drilling: Not Recorded
After Drilling: 479.00

Drillling Contractor: Cascade Drilling
Drilling Method: Air Rotary Casing Hammer
Logged By: T. Richards/T. Kunkel

Depth (ft)	Sample Type	Number	Headspace PID	Lithologic Log	Material Description	U.S.C.S.	Well Diagram	Remarks
120					Silty SAND (SM); light brown (7.5YR 6/4); 70% very fine sand; subrounded; 30% silt.	SM		PID = 0.0 ppm @ cyclone and BZ.
125					Same as above (120 ft).			Hammering intermittently.
130					Same as above (120 ft); trace coarse sand; subangular; trace gravel to 1/2"; subrounded.			Water added at cylcone for dust suppression; hammering.
135					Same as above (120 ft); trace coarse sand; subangular; trace gravel to 1/2"; subrounded.		High Solids Bentonite Grout	PID = 0.0 ppm @ cyclone and BZ.
140					Same as above (120 ft); brown (7.5YR 5/4); 60% fine sand; trace coarse sand; subrounded; 40% silt.			Kelly down @ 1630, new 20' connection @ 1639.
145								Water added @ cyclone and on hammer for dust suppression.
								Slow drilling; hammering.
								PID = 0.0 ppm @ cyclone and BZ.
150					Lean CLAY with Sand (CL); brown (7.5YR 5/3); very hard; 85% clay; 15% fine sand; trace gravel.	CL		

BOREHOLE_LOG - CB&I_DRILLING.GDT - 5/9/17 16:19 - Z:\KAFB RAPID\GINT\KAFB_RAPID_11-1-2016.GPJ

Borehole ID: KAFB-106EX1

Client: US Army Corps of Engineers
Project Location: KAFB, Albuquerque, NM
Project Name: KAFB RAPID SWMU ST-106/SS-111
Project Number: 500433

Date Started: 3/3/2017
Date TD Reached: 3/12/2017
Date Completed: 4/19/2017

Ground Elevation AMSL (ft): Not Recorded
Y Coordinate:
X Coordinate:

Hole Diameter Upper (in.): 13-3/8
Hole Diameter Lower (in.): 11-3/4
Surface Completion Type: Vault

Groundwater Levels BGS (ft):
At Time of Drilling: 477.00
At End of Drilling: Not Recorded
After Drilling: 479.00

Drillling Contractor: Cascade Drilling
Drilling Method: Air Rotary Casing Hammer
Logged By: T. Richards/T. Kunkel

Depth (ft)	Sample Type	Number	Headspace PID	Lithologic Log	Material Description	U.S.C.S.	Well Diagram	Remarks
150					Lean CLAY with Sand (CL); brown (7.5YR 5/3); very hard; 85% clay; 15% fine sand; trace gravel.	CL		Water added at cylcone and hammer for dust suppression; hammering.
155								PID = 0.0 ppm @ cyclone and BZ.
					SILT (ML); brown (7.5YR 5/4); 90% silt; trace clay; 10% fine sand; subrounded.	ML		Kelly down @ 1710, new 20' connection @ 1718. End of 3/3/17. Resume drilling @ 0747 on 3/4/17. Slow drilling; hammering.
160					SILT with Sand (ML); brown (7.5YR 5/4); 70% silt; 5% clay; 25% fine to coarse sand; subrounded.			
					Well-graded SAND (SW); brown (7.5YR 5/4); 90% fine to coarse sand; subrounded to rounded; 10% silt.	SW		
165							High Solids Bentonite Grout	
					Silty SAND (SM); brown (7.5YR 4/4); 50% fine to coarse sand; subrounded; 35% silt; 15% clay.	SM		
170								PID = 0.0 ppm @ cyclone and BZ.
					Well-graded SAND with Silt (SW-SM); light brown (7.5YR 6/4); 90% fine to coarse sand; subrounded; 10% silt; trace clay.	SW-SM		Hammering intermittently.
175								Kelly down @ 0833, new 20' connection @ 0839.
					Well-graded SAND (SW); light brown (7.5YR 6/4); 100% fine to very coarse sand; subrounded; trace silt.	SW		
180								

BOREHOLE_LOG - CB&I_DRILLING.GDT - 5/9/17 16:19 - Z:\KAFB RAPID\GINT\KAFB_RAPID_11-1-2016.GPJ

Borehole ID: KAFB-106EX1

Client: US Army Corps of Engineers
Project Location: KAFB, Albuquerque, NM
Project Name: KAFB RAPID SWMU ST-106/SS-111
Project Number: 500433

Date Started: 3/3/2017
Date TD Reached: 3/12/2017
Date Completed: 4/19/2017

Ground Elevation AMSL (ft): Not Recorded
Y Coordinate:
X Coordinate:

Hole Diameter Upper (in.): 13-3/8
Hole Diameter Lower (in.): 11-3/4
Surface Completion Type: Vault

Groundwater Levels BGS (ft):
At Time of Drilling: 477.00
At End of Drilling: Not Recorded
After Drilling: 479.00

Drillling Contractor: Cascade Drilling
Drilling Method: Air Rotary Casing Hammer
Logged By: T. Richards/T. Kunkel

Depth (ft)	Sample Type	Number	Headspace PID	Lithologic Log	Material Description	U.S.C.S.	Well Diagram	Remarks
180					Well-graded SAND (SW); light brown (7.5YR 6/4); 100% fine to very coarse sand; subangular to subrounded; trace fine gravel; trace silt. Note: sand is granitic minerals.			Some hammering. PID = 0.0 ppm @ cyclone and BZ.
								Hammering.
185								
					Same as above (180 ft); 90% fine to very coarse sand; 10% gravel to 1/4"; subangular to subrounded.			Water used at surface for dust suppression while drilling.
190								
								Hammering. PID = 0.0 ppm @ cyclone and BZ.
195					Same as above (180 ft); pale brown (10YR 6/3); 90% fine to very coarse sand; subrounded; 10% fine gravel to 1/8".	SW	High Solids Bentonite Grout	Kelly down @ 0929, new 20' connection @ 1036.
200					Well-graded SAND with Gravel (SW); pale brown (10YR 6/3); 80% fine to very coarse sand; subrounded; 20% gravel to 3/8"; subrounded.			Slow drilling; hammering.
205					Same as above (202 ft).			
210								

BOREHOLE_LOG - CB&I_DRILLING.GDT - 5/9/17 16:19 - Z:\KAFB RAPID\GINT\KAFB_RAPID_11-1-2016.GPJ

Borehole ID: KAFB-106EX1

Client: US Army Corps of Engineers
Project Location: KAFB, Albuquerque, NM
Project Name: KAFB RAPID SWMU ST-106/SS-111
Project Number: 500433

Date Started: 3/3/2017
Date TD Reached: 3/12/2017
Date Completed: 4/19/2017

Ground Elevation AMSL (ft): Not Recorded
Y Coordinate:
X Coordinate:

Hole Diameter Upper (in.): 13-3/8
Hole Diameter Lower (in.): 11-3/4
Surface Completion Type: Vault

Groundwater Levels BGS (ft):
At Time of Drilling: 477.00
At End of Drilling: Not Recorded
After Drilling: 479.00

Drillling Contractor: Cascade Drilling
Drilling Method: Air Rotary Casing Hammer
Logged By: T. Richards/T. Kunkel

Depth (ft)	Sample Type	Number	Headspace PID	Lithologic Log	Material Description	U.S.C.S.	Well Diagram	Remarks
210					Well-graded SAND with Gravel (SW); pale brown (10YR 6/3); 80% fine to very coarse sand; subrounded; 20% gravel to 3/8"; subrounded.	SW		PID = 0.0 ppm @ cyclone and BZ.
215					Poorly graded GRAVEL (GP); 100% fine gravel to 1/4"; subrounded.	GP		Hammering intermittently.
					Well-graded SAND (SW); pale brown (10YR 10/3); 100% sand; subrounded; trace gravel. Note: sand and gravel are granitic minerals.			Kelly down @ 1108, new 20' connection @ 1116.
220					Same as above (216 ft).			Very slow drilling; hammering.
225					Same as above (216); 90% sand; 10% fine gravel to 1/4".		High Solids Bentonite Grout	
						SW		Hammering continuously.
230					Same as above (216); 90% sand; 10% fine gravel to 1/4".			PID = 0.0 ppm @ cyclone and BZ.
235					Well-graded SAND with Gravel (SW); pale brown (10YR 10/3); 80% fine to very coarse sand; subrounded; 20% gravel to 1/4". Note: sand and gravel are granitic minerals.			Water added at cyclone for dust suppression. Kelly down @ 1238, new 20' connection @ 1244.
240								

BOREHOLE_LOG - CB&I_DRILLING.GDT - 5/9/17 16:19 - Z:\KAFB RAPID\GINT\KAFB_RAPID_11-1-2016.GPJ

Borehole ID: KAFB-106EX1

Client: US Army Corps of Engineers
Project Location: KAFB, Albuquerque, NM
Project Name: KAFB RAPID SWMU ST-106/SS-111
Project Number: 500433

Date Started: 3/3/2017
Date TD Reached: 3/12/2017
Date Completed: 4/19/2017

Ground Elevation AMSL (ft): Not Recorded
Y Coordinate:
X Coordinate:

Hole Diameter Upper (in.): 13-3/8
Hole Diameter Lower (in.): 11-3/4
Surface Completion Type: Vault

Groundwater Levels BGS (ft):
At Time of Drilling: 477.00
At End of Drilling: Not Recorded
After Drilling: 479.00

Drillling Contractor: Cascade Drilling
Drilling Method: Air Rotary Casing Hammer
Logged By: T. Richards/T. Kunkel

Depth (ft)	Sample Type	Number	Headspace PID	Lithologic Log	Material Description	U.S.C.S.	Well Diagram	Remarks
240					Well-graded SAND (SW); pale brown (10YR 6/3); 100% fine to coarse sand; trace gravel; subangular to subrounded. Note: gravel is granitic minerals.	SW		Hammering. PID = 0.0 ppm @ cyclone and BZ.
245					Same as above (240 ft).	SW		Hammering almost continuously.
250					Same as above (240 ft); trace gravel to 1/8".	SW		Hammering.
255					Same as above (240 ft); 90% fine to coarse sand; 10% gravel to 3/8"; subrounded.	SW	High Solids Bentonite Grout	PID = 0.1 ppm @ cyclone and 0.0 ppm @ BZ.
260					Sandy lean CLAY (CL); yellowish brown (10YR 5/4); dry; 75% clay; 25% fine sand; trace fine gravel to 1/4".	CL		Kelly down @ 1330. Place 5 foot section of 13-3/4" casing @ 1354. Begin tripping in 260 feet of 11-3/4" casing. End of 3/4/17. Resume drilling @ 0805 on 3/5/17.
265					Same as above (260 ft).	CL		
270								No hammering; no water added downhole.

BOREHOLE_LOG - CB&I_DRILLING.GDT - 5/9/17 16:19 - Z:\KAFB RAPID\GINT\KAFB_RAPID_11-1-2016.GPJ

Borehole ID: KAFB-106EX1

Client: US Army Corps of Engineers
Project Location: KAFB, Albuquerque, NM
Project Name: KAFB RAPID SWMU ST-106/SS-111
Project Number: 500433

Date Started: 3/3/2017
Date TD Reached: 3/12/2017
Date Completed: 4/19/2017

Ground Elevation AMSL (ft): Not Recorded
Y Coordinate:
X Coordinate:

Hole Diameter Upper (in.): 13-3/8
Hole Diameter Lower (in.): 11-3/4
Surface Completion Type: Vault

Groundwater Levels BGS (ft):
At Time of Drilling: 477.00
At End of Drilling: Not Recorded
After Drilling: 479.00

Drillling Contractor: Cascade Drilling
Drilling Method: Air Rotary Casing Hammer
Logged By: T. Richards/T. Kunkel

Depth (ft)	Sample Type	Number	Headspace PID	Lithologic Log	Material Description	U.S.C.S.	Well Diagram	Remarks
270					Sandy lean CLAY (CL); yellowish brown (10YR 5/4); dry; 75% clay; 25% fine sand; trace fine gravel to 1/4". Lens of fine to medium sand.	CL		PID = 0.2 ppm @ cyclone and 0.1 ppm @ BZ. Hammering intermittently.
275					Poorly graded SAND (SP); light brown (7.5YR 6/4); dry; 85% fine sand; 15% medium to coarse sand.	SP		Kelly down @ 0826, new 20' connection @ 0832.
280					Same as above (276 ft).	SP		PID = 0.1 ppm @ cyclone and BZ.
285						SP	High Solids Bentonite Grout	Hammering intermittently; no water added downhole.
290					SILT (ML); strong brown (7.5YR 5/6); dry; 100% silt; trace fine sand.	ML		
295					Clayey SAND (SC); light brown (7.5YR 6/3); 75% fine sand; trace medium and coarse sand; trace fine gravel; 25% clay; low plasticity.	SC		
300					Same as above (291 ft); 15% fine gravel to 1/2". Note: gravel is mafics and quartz.	SC		Kelly down @ 0851, new 20' connection @ 0858.

BOREHOLE_LOG - CB&I_DRILLING.GDT - 5/9/17 16:19 - Z:\KAFB RAPID\GINT\KAFB_RAPID_11-1-2016.GPJ

Borehole ID: KAFB-106EX1

Client: US Army Corps of Engineers
Project Location: KAFB, Albuquerque, NM
Project Name: KAFB RAPID SWMU ST-106/SS-111
Project Number: 500433

Date Started: 3/3/2017
Date TD Reached: 3/12/2017
Date Completed: 4/19/2017

Ground Elevation AMSL (ft): Not Recorded
Y Coordinate:
X Coordinate:

Hole Diameter Upper (in.): 13-3/8
Hole Diameter Lower (in.): 11-3/4
Surface Completion Type: Vault

Groundwater Levels BGS (ft):
At Time of Drilling: 477.00
At End of Drilling: Not Recorded
After Drilling: 479.00

Drillling Contractor: Cascade Drilling
Drilling Method: Air Rotary Casing Hammer
Logged By: T. Richards/T. Kunkel

Depth (ft)	Sample Type	Number	Headspace PID	Lithologic Log	Material Description	U.S.C.S.	Well Diagram	Remarks
300					Clayey SAND (SC); light brown (7.5YR 6/3); 60% fine sand; trace medium and coarse sand; 15% fine gravel to 1/2"; 25% clay; low plasticity.	SC		PID = 0.2 ppm @ cyclone and 0.1 ppm @ BZ.
					Well-graded SAND with Gravel (SW); light brown (7.5YR 6/4); dry; 80% fine to coarse sand; 20% fine gravel to 1/2"; subangular to rounded. Note: gravel is mafics and granitic minerals.	SW		Some hammering.
305								
310					Same as above (303 ft).			Hammering; no water added downhole.
315					Same as above (303 ft).		High Solids Bentonite Grout	
								Kelly down @ 0922, new 20' connection @ 0929.
320					Same as above (303 ft).			PID = 0.3 ppm @ cyclone and 0.1 ppm @ BZ. Windy.
325					Same as above (303 ft).			Hammering; no water added downhole.
330								

BOREHOLE_LOG - CB&I_DRILLING.GDT - 5/9/17 16:19 - Z:\KAFB RAPID\GINT\KAFB_RAPID_11-1-2016.GPJ

Borehole ID: KAFB-106EX1

Client: US Army Corps of Engineers
Project Location: KAFB, Albuquerque, NM
Project Name: KAFB RAPID SWMU ST-106/SS-111
Project Number: 500433

Date Started: 3/3/2017
Date TD Reached: 3/12/2017
Date Completed: 4/19/2017

Ground Elevation AMSL (ft): Not Recorded
Y Coordinate:
X Coordinate:

Hole Diameter Upper (in.): 13-3/8
Hole Diameter Lower (in.): 11-3/4
Surface Completion Type: Vault

Groundwater Levels BGS (ft):
At Time of Drilling: 477.00
At End of Drilling: Not Recorded
After Drilling: 479.00

Drillling Contractor: Cascade Drilling
Drilling Method: Air Rotary Casing Hammer
Logged By: T. Richards/T. Kunkel

Depth (ft)	Sample Type	Number	Headspace PID	Lithologic Log	Material Description	U.S.C.S.	Well Diagram	Remarks
330					Well-graded SAND with Gravel (SW); light brown (7.5YR 6/4); dry; 80% fine to coarse sand; 20% fine gravel to 1/8"; subangular to rounded. Note: gravel is mafics and granitic minerals.	SW		PID = 0.3 ppm @ cyclone and 0.2 ppm @ BZ. Hammering; no water added downhole.
335					Same as above (330 ft).			
								Kelly down @ 0954, new 20' connection @ 1000.
340					Same as above (330 ft).			PID = 0.2 ppm @ cyclone and 0.1 ppm @ BZ.
345					Same as above (330 ft).		High Solids Bentonite Grout	
350					Lean CLAY (CL); hard clay lens with sand and gravel.	CL		Very windy, gusts to 32 mph.
355					Well-graded SAND with Gravel (SW); light brown (7.5YR 6/4); dry; 80% fine to coarse sand; 20% fine gravel to 1/8"; subangular to rounded. Note: gravel is mafics and granitic minerals.	SW		
360					Well-graded SAND with Silt and Gravel (SW-SM); reddish yellow (7.5YR 6/6); dry; 60% fine to coarse sand; 30% fine gravel to 3/8"; subangular to rounded.	SW-SM		Kelly down @ 1048. Stop drilling for the day due to high winds. Resume drilling @ 1010 on

BOREHOLE_LOG - CB&I_DRILLING.GDT - 5/9/17 16:19 - Z:\KAFB RAPID\GINT\KAFB_RAPID_11-1-2016.GPJ

Borehole ID: KAFB-106EX1

Client: US Army Corps of Engineers
Project Location: KAFB, Albuquerque, NM
Project Name: KAFB RAPID SWMU ST-106/SS-111
Project Number: 500433

Date Started: 3/3/2017
Date TD Reached: 3/12/2017
Date Completed: 4/19/2017

Ground Elevation AMSL (ft): Not Recorded
Y Coordinate:
X Coordinate:

Hole Diameter Upper (in.): 13-3/8
Hole Diameter Lower (in.): 11-3/4
Surface Completion Type: Vault

Groundwater Levels BGS (ft):
At Time of Drilling: 477.00
At End of Drilling: Not Recorded
After Drilling: 479.00

Drillling Contractor: Cascade Drilling
Drilling Method: Air Rotary Casing Hammer
Logged By: T. Richards/T. Kunkel

Depth (ft)	Sample Type	Number	Headspace PID	Lithologic Log	Material Description	U.S.C.S.	Well Diagram	Remarks
360					Well-graded SAND with Silt and Gravel (SW-SM); reddish yellow (7.5YR 6/6); dry; 60% fine to coarse sand; 30% fine gravel to 3/8"; subangular to rounded. Note: gravel is fragmented from bit; mafics and granitic minerals.	SW-SM		3/11/17. Had to pull casing back and redrill part of the borehole. PID = 0.1 ppm @ cyclone and BZ.
365					Same as above (360 ft); gravel to 3/4".			Hammering with casing hammer; no water added downhole.
370					Well-graded GRAVEL with Silt and Sand (GW-GM); brown (7.5YR 5/4); dry; 60% fine to coarse gravel to 3/4"; angular to rounded; 30% fine to coarse sand; 10% silt. Note: gravel is mafics and granitic minerals.	GW-GM		
375					Well-graded SAND with Silt and Gravel (SW-SM); brown (7.5YR 4/3); 70% fine to coarse sand; 20% fine gravel to 1/4"; 10% silt.	SW-SM	High Solids Bentonite Grout	Hammering downhole and with casing hammer.
380					Same as above (372 ft).			Kelly down @ 1036, new 20' connection @ 1045.
385					Same as above (372 ft).			PID = 0.2 ppm @ cyclone and 0.1 ppm @ BZ.
390								Hammering continuously.

BOREHOLE_LOG - CB&I_DRILLING.GDT - 5/9/17 16:19 - Z:\KAFB RAPID\GINT\KAFB_RAPID_11-1-2016.GPJ

Borehole ID: KAFB-106EX1

Client: US Army Corps of Engineers
Project Location: KAFB, Albuquerque, NM
Project Name: KAFB RAPID SWMU ST-106/SS-111
Project Number: 500433

Date Started: 3/3/2017
Date TD Reached: 3/12/2017
Date Completed: 4/19/2017

Ground Elevation AMSL (ft): Not Recorded
Y Coordinate:
X Coordinate:

Hole Diameter Upper (in.): 13-3/8
Hole Diameter Lower (in.): 11-3/4
Surface Completion Type: Vault

Groundwater Levels BGS (ft):
At Time of Drilling: 477.00
At End of Drilling: Not Recorded
After Drilling: 479.00

Drillling Contractor: Cascade Drilling
Drilling Method: Air Rotary Casing Hammer
Logged By: T. Richards/T. Kunkel

Depth (ft)	Sample Type	Number	Headspace PID	Lithologic Log	Material Description	U.S.C.S.	Well Diagram	Remarks
390					Well-graded SAND with Silt and Gravel (SW-SM); brown (7.5YR 4/3); 70% fine to coarse sand; 20% fine gravel to 1/4"; 10% silt.	SW		Hammering; no water added downhole.
395					Poorly graded SAND (SP); brown (7.5YR 5/3); dry; 90% medium to coarse sand; trace fine gravel to 1/8"; 10% silt.	SP		
400					Well-graded SAND with Gravel (SW); brown (7.5YR 5/4); dry; 70% fine to coarse sand; 30% fine gravel to 1/2"; subangular to rounded; trace silt. Note: gravel is mafics and granitic minerals.	SW		Kelly down @ 1118, new 20' connection @ 1134. PID = 0.1 ppm @ cyclone and BZ.
405					Same as above (396 ft).		High Solids Bentonite Grout	
410					Same as above (396 ft).			
415					Same as above (396 ft).			
420					Same as above (396 ft).			Kelly down @ 1216, new 20' connection @ 1457. Rig repairs.

BOREHOLE_LOG - CB&I_DRILLING.GDT - 5/9/17 16:19 - Z:\KAFB RAPID\GINT\KAFB_RAPID_11-1-2016.GPJ

Borehole ID: KAFB-106EX1

Client: US Army Corps of Engineers
Project Location: KAFB, Albuquerque, NM
Project Name: KAFB RAPID SWMU ST-106/SS-111
Project Number: 500433

Date Started: 3/3/2017
Date TD Reached: 3/12/2017
Date Completed: 4/19/2017

Ground Elevation AMSL (ft): Not Recorded
Y Coordinate:
X Coordinate:

Hole Diameter Upper (in.): 13-3/8
Hole Diameter Lower (in.): 11-3/4
Surface Completion Type: Vault

Groundwater Levels BGS (ft):
At Time of Drilling: 477.00
At End of Drilling: Not Recorded
After Drilling: 479.00

Drillling Contractor: Cascade Drilling
Drilling Method: Air Rotary Casing Hammer
Logged By: T. Richards/T. Kunkel

Depth (ft)	Sample Type	Number	Headspace PID	Lithologic Log	Material Description	U.S.C.S.	Well Diagram	Remarks
420					Well-graded SAND with Gravel (SW); brown (7.5YR 5/4); dry; 70% fine to coarse sand; 30% fine gravel to 1/2"; subangular to rounded; trace silt. Note: gravel is mafics and granitic minerals.	SW		PID = 0.9 ppm @ cyclone and 0.0 ppm @ BZ.
425					Same as above (420 ft).			
430					Same as above (420 ft); light brown (7.5YR 6/4); 80% fine to coarse sand; 15% fine gravel to 1/4"; angular to rounded; 5% silt.			Hammering continuously with casing hammer. Hammering intermittently with downhole hammer.
435					Same as above (420 ft); light brown (7.5YR 6/4); 80% fine to coarse sand; 15% fine gravel to 1/4"; angular to rounded; 5% silt.		High Solids Bentonite Grout	No water added downhole.
440					Same as above (420 ft); light brown (7.5YR 6/4); 80% fine to coarse sand; 15% fine gravel to 1/4"; angular to rounded; 5% silt.			Kelly down @ 1520, new 20' connection. End of 3/11/17. Resume drilling @ 0746 on 3/12/17.
445					Same as above (420 ft); light brown (7.5YR 6/4); 80% fine to coarse sand; 15% fine gravel to 1/4"; angular to rounded; 5% silt.			PID = 0.1 ppm @ cyclone and BZ.
					SILT (ML); lens.	ML	Top of Bentonite Seal	Hammering; no water added downhole.
450					Well-graded SAND with Gravel (SW); light brown (7.5YR 6/4); dry; 80% fine to coarse sand; 15% fine gravel to 1/2";	SW		

BOREHOLE_LOG - CB&I_DRILLING.GDT - 5/9/17 16:19 - Z:\KAFB RAPID\GINT\KAFB_RAPID_11-1-2016.GPJ

Borehole ID: KAFB-106EX1

Client: US Army Corps of Engineers
Project Location: KAFB, Albuquerque, NM
Project Name: KAFB RAPID SWMU ST-106/SS-111
Project Number: 500433

Date Started: 3/3/2017
Date TD Reached: 3/12/2017
Date Completed: 4/19/2017

Ground Elevation AMSL (ft): Not Recorded
Y Coordinate:
X Coordinate:

Hole Diameter Upper (in.): 13-3/8
Hole Diameter Lower (in.): 11-3/4
Surface Completion Type: Vault

Groundwater Levels BGS (ft):
At Time of Drilling: 477.00
At End of Drilling: Not Recorded
After Drilling: 479.00

Drillling Contractor: Cascade Drilling
Drilling Method: Air Rotary Casing Hammer
Logged By: T. Richards/T. Kunkel

Depth (ft)	Sample Type	Number	Headspace PID	Lithologic Log	Material Description	U.S.C.S.	Well Diagram	Remarks
450					angular to rounded; 5% silt. Note: gravel is mafics and granitic minerals.			
					Well-graded SAND with Gravel (SW); light brown (7.5YR 6/4); dry; 80% fine to coarse sand; 15% fine gravel to 1/2"; angular to rounded; 5% silt. Note: gravel is mafics and granitic minerals.	SW		Hammering.
455								
					Poorly graded SAND with Silt (SP-SM); yellowish brown (10YR 5/4); dry; 80% fine to medium sand; 10% fine gravel to 1/4"; rounded; 10% silt. Note: gravel is mafics and granitic minerals.			Kelly down @ 0806, new 20' connection @ 0823.
460								PID = 0.1 ppm @ cyclone and BZ.
							Bentonite Seal	
					Same as above (457 ft).			
465			0.2					PID = 0.2 ppm @ cyclone and 0.1 ppm @ BZ.
						SP-SM		
					Same as above (457 ft).			
470			1.6					PID = 0.1 ppm @ cyclone and BZ.
					Same as above (457 ft).			
475			1.5					PID = 1.8 ppm @ cyclone and 0.3 ppm @ BZ.
							Top of 10/20 Sand	Kelly down @ 0852, new 20' connection @ 0927. Top of groundwater @ 477 feet bgs.
480								

BOREHOLE_LOG - CB&I_DRILLING.GDT - 5/9/17 16:19 - Z:\KAFB RAPID\GINT\KAFB_RAPID_11-1-2016.GPJ

Borehole ID: KAFB-106EX1

Client: US Army Corps of Engineers
Project Location: KAFB, Albuquerque, NM
Project Name: KAFB RAPID SWMU ST-106/SS-111
Project Number: 500433

Date Started: 3/3/2017
Date TD Reached: 3/12/2017
Date Completed: 4/19/2017

Ground Elevation AMSL (ft): Not Recorded
Y Coordinate:
X Coordinate:

Hole Diameter Upper (in.): 13-3/8
Hole Diameter Lower (in.): 11-3/4
Surface Completion Type: Vault

Groundwater Levels BGS (ft):
At Time of Drilling: 477.00
At End of Drilling: Not Recorded
After Drilling: 479.00

Drillling Contractor: Cascade Drilling
Drilling Method: Air Rotary Casing Hammer
Logged By: T. Richards/T. Kunkel

Depth (ft)	Sample Type	Number	Headspace PID	Lithologic Log	Material Description	U.S.C.S.	Well Diagram	Remarks
480			12.8		Poorly graded SAND with Silt (SP-SM); yellowish brown (10YR 5/4); wet; 80% fine to medium sand; 10% fine gravel to 1/4"; rounded; 10% silt. Note: gravel is mafics and granitic minerals.	SP-SM		PID = 18.7 ppm @ cyclone and 0.3 ppm @ BZ.
485			37.8		Same as above (480 ft).		Top of Stainless Steel 0.040 Slot Screen	PID = 119.8 ppm @ cyclone and 0.5 ppm @ BZ.
490			63.4					PID = 850 ppm @ cyclone and 1.7 ppm @ BZ.
					Well-graded SAND with Gravel (SW); dark yellowish brown (10YR 4/4); wet; 75% fine to coarse sand; 25% fine gravel to 1/2"; subangular to rounded. Note: gravel is mafics and granitic minerals.	SW		Approximately 200 gallons of water added downhole.
495			58.3				Stainless Steel 0.040 Slot Screen	PID = 747 ppm @ cyclone and 6.2 ppm @ BZ. Kelly down @ 1020, new 20' connection @ 1039.
500			22.5		Same as above (492 ft).		Bottom of Screen	PID = 31.4 ppm @ cyclone and 1.7 ppm @ BZ.
505			6.8		Same as above (492 ft); poor cuttings returns.		Stainless Steel Sump Bottom of Sump	PID = 9.8 ppm @ cyclone and 0.3 ppm @ BZ.
510								Hammering. Approximately 50 gallons of water added

BOREHOLE_LOG - CB&I_DRILLING.GDT - 5/9/17 16:19 - Z:\KAFB RAPID\GINT\KAFB_RAPID_11-1-2016.GPJ

Borehole ID: KAFB-106EX1

Client: US Army Corps of Engineers
Project Location: KAFB, Albuquerque, NM
Project Name: KAFB RAPID SWMU ST-106/SS-111
Project Number: 500433

Date Started: 3/3/2017
Date TD Reached: 3/12/2017
Date Completed: 4/19/2017

Ground Elevation AMSL (ft): Not Recorded
Y Coordinate:
X Coordinate:

Hole Diameter Upper (in.): 13-3/8
Hole Diameter Lower (in.): 11-3/4
Surface Completion Type: Vault

Groundwater Levels BGS (ft):
At Time of Drilling: 477.00
At End of Drilling: Not Recorded
After Drilling: 479.00

Drillling Contractor: Cascade Drilling
Drilling Method: Air Rotary Casing Hammer
Logged By: T. Richards/T. Kunkel

Depth (ft)	Sample Type	Number	Headspace PID	Lithologic Log	Material Description	U.S.C.S.	Well Diagram	Remarks
510					Well-graded SAND with Gravel (SW); dark yellowish brown (10YR 4/4); wet; 75% fine to coarse sand; 25% fine gravel to 1/2"; subangular to rounded. Note: poor cuttings returned.			downhole. PID = 4.6 ppm @ cyclone and 0.3 ppm @ BZ.
515								PID = 1.7 ppm @ cyclone and 0.3 ppm @ BZ.
520			1.9		Same as above (510 ft); gravel to 1".			Kelly down @ 1130, new 20' connection @ 1600.
525			1.4		Same as above (510 ft); gravel to 1".	SW	Bottom of 10/20 Filter Pack	
530			1.6		Same as above (510 ft); gravel to 1".		Native Backfill	
535			0.9		Same as above (510 ft); gravel to 1".		Bottom of Rat Hole	Approximately 100 gallons of water added downhole. Total depth = 537 feet bgs. Reached total depth @ 1625 on 3/12/17.
540								

BOREHOLE_LOG - CB&I_DRILLING.GDT - 5/9/17 16:19 - Z:\KAFB RAPID\GINT\KAFB_RAPID_11-1-2016.GPJ

Groundwater Extraction Well Development

KAFB-106 EX 1

Bailing

Date	Time	Total Volume Bailed (gallons)	Imhoff Cone Measurement (mL sediment per L water)	Comments
4/4/17	0855	0	–	Purging begins
	0907	5	10	dark- not a lot of sand - odor present
	0914	15	20	
	0921	20	60	filter pack suspected
	0927	30	34	
	0934	35	33	
	0940	35	–	Empty
	1000	42	9	
	1006	44	22	Water very dark
	1010	50	20	Pump off drum
	1031	55	20	
	1037	60	20	
	1042	65	70	
	1105	70	10	switched to smaller bailer
	1110	74	2	
	1112	76	4	
	1116	80	3	Switching to pumping

Groundwater Extraction Well Development

Pumping KAFB 10GEX1

Date	Time	Rate (gpm)	Depth to Water (ft BGS)	Volume Removed (gallons)	Temp (°C)	pH	EC (mS/cm)	Turbidity (NTU)	Specific Capacity (gpm/ft)	Comments
4/4/17	1520	4	479	NR						Pump On
	1533	4.24	479.6	46	20.4	7.77	0.402	>1000	?	
	1548	4.22	479.6	101	20.5	7.68	0.400	14.2	?	
	1602	4.22	479.6	154	20.5	7.72	0.410	8.32	?	
	1615	4.24	479.6	215	20.6	7.68	0.417	5.63	?	
	1620	NR								Pump off - surge
	1625	NR	478.7	222	NR					Pump on
	1640	4.22	479.6	271	20.6	7.73	0.425	9.86		
	1656	4.24	479.7	340	20.6	7.69	0.430	4.88		
	1700	NR	4	362.74	NR					Shutting pump off to surge
	1710	NR	479	362	NR					Pump back on
	1730		479.7	397	20.8	7.68	0.428	7.31		
4/5/17	0720	4.22	NR		NR					Pump on - clearing ice from lines
	0803	4.22	NR	571	20.4	7.71	0.419	3.81		
	0805									Pump off trip out
	1338	—	479.45	571	NR					Pump on
	1342									Pump off - stopped working
	~~1528~~	~~7.5~~			~~20.6~~	~~7.76~~	~~0.436~~	~~7.48~~		~~pump on~~
	1542	7.5	714	714	20.6	7.76	0.435	7.48		
	1715	8.5		876	NR					Pump off
4/6/17	0747	Ø		884	NR					Pump on
	0763	8.75	NR	931	19.4	8.22	0.426	36.4		
	0823			1201	20.0	7.72	0.432	21.9		Pump off - surge
	0833			1201	NR					Pump on

* Total does not include Bailing water

Groundwater Extraction Well Development

Pumping KAFB-106EX1

Date	Time	Rate (gpm)	Depth to Water (ft BGS)	Volume Removed (gallons)	Temp (°C)	pH	EC (mS/cm)	Turbidity (NTU)	Specific Capacity (gpm/ft)	Comments Pump intake @ 497' bgs
4/7	0808	0	479.3	1201	NR					Tag ▽ w/ pump in
	0825									Pump on
	0826									off - change wire direction
	0828									Pump on
	0830									Pump off - Blew fuse
	0945									Pump on
	0949	26	482.8	1254	20.2	8.06	0.437	22.1	7.4	
	0959	26	483.2	1654	20.1	8.37	0.448	9.21	6.7	
	1000									Pump off surge
	1010									Pump on
	1017	26	483.05	1810	20.1	8.42	0.456	17.6	7	
	1029			2122	NR					Pump off - surge
	1037									on
	1045	26	483.25	2,330	20.1	8.14	0.464	22.6		
	1048			2,408	NR					off - surge
	1058									on
	1102	26	483.2	2,512	20.2	8.24	0.468	32.0	6.7	
	1108	26	483.3	2,668	20.2	8.18	0.467	22.7	6.5	
	1112			2,772						off
	1122									on
	1129	26	483.3	2,954	20.2	8.24	0.472	26.8	6.5	
	1130			2954	NR					off
	1139			2954						on
	1147	26	483.4	3,136	20.2	8.20	0.475	28.9		
	1148									off
	1231			3,136						on
	1238	26	483.3	3,370	20.2	8.86	0.477	22.9	~~22.9~~	
	1239									off
	1248	26		3,370						on
	1257	26	483.4	3,604	20.2	8.89	0.479	24.6	6.3	off
	1305									on
	1315	26	483.4	3,890	20.2	8.83	0.484	23.9	6.3	
	1316									off
	1327	26		3,890	NR					on
	1404		4800 →	~~4,670~~						done w/ 30 min pump test

* All ▽ measurements from BTOC

Groundwater Extraction Well Development

Pumping 30 min Pump test KAFB 10GEX1

Date	Time	Rate (gpm)	Depth to Water (ft BGS)	Volume Removed (gallons)	Temp (°C)	pH	EC (mS/cm)	Turbidity (NTU)	Specific Capacity (gpm/ft)	Comments
4/7	1332	26	483.35	4020	20.2		0.482	22.8		
	1337	26	483.45	4150	20.2		0.479	19.6		
	1342	26	483.54	4280	20.2		0.479	17.2		
	1347	26	483.65	4410	20.2		0.478	10.9		
	1352	26	483.65	4540	20.2		0.480	9.6		
	1357	26	483.7	4670	20.2		0.479	8.4		
	1402	26	483.75	4800	20.2		0.481	7.90		
	1602	26	479.3	4800	NR →					Pump on
	1609	26	483.3	4982	20.2	7.74	0.491	28.1		Pump off
	1619									on
	1627	26	483.35	5190	20.2	7.24	0.500	24.8		off
	1638	–	479.3							on
	1646		483.4	5398	20.2	7.35	0.498	18.0		
	1653		483.5	~~5580~~ 5580	20.2	7.20	0.497	11.0		
4/8	0758	25								Pump on · Pump test
	0806	20		5,805						
	0900	20		6,885	20.2		0.490	13.7		
	0945	20		7,785	20.3	7.35	0.489	9.25		
	1023	20		8,545	20.3	7.38	0.487	8.48		
	1128	20		9,845	20.2	7.4	0.488	8.26		
	1208	20			20.3	7.4	0.489	7.42		final Readings
	1211			10,705						Pump off

Constant Rate Test
Water Levels

Date 4/8/2017

Personnel Crystal Hardee / Chris Scott

Well ID 106EX1

Start Time 0805

Water Level

Date/Time	Water Level (feet below TOC ~~vault~~)	Drawdown (feet) below TOC	Transducer Depth (feet)	Transducer battery (%)	Comments
0800	479.1	static			
0805					Started pumping 20 GPM
0810	482.8	3.7			
0815	482.9	3.8			
0820	483.0	3.9			
0825	483.1	4			
0830	483.1	4			
0835	483.15	4.05			
0840	483.17	4.07			
0845	483.2	4.1			
0850	483.25	4.15			
0855	483.3	4.2			
0900	483.3	4.2			
0905	483.3	4.2			
0915	483.35	4.25			
0925	483.35	4.25			
0930	483.4	4.3			
0950	483.45	4.35			
1005	483.45	4.35			
1020	483.5	4.4			
1035	483.55	4.45			
1050	483.6	4.5			
1105	483.6	4.5			
1120	483.62	4.52			
1135	483.65	4.65			
1150	483.68	4.58			
1211	483.68	4.58			Pump off

5 min

30 min

1.5

* Measurements from below top of casing - 16" casing stick up

Constant Rate Test
Water Levels

Date 4.8.17

Personnel CHRIS/CRYSTAL

Well ID 106063

Start Time 8:00 AM

Water Level					
Date/Time 4.8.17	Water Level (feet below vault)	Drawdown (feet)	Transducer Depth (feet)	Transducer battery (%)	Comments
8:05	480.40	STATIC Δ	PUMP START @		20 GPM
8:10	480.40				
8:15	480.45				
8:20	480.45				
8:25	480.45				
8:30	480.45				
8:35	480.45				
8:40	480.45				
8:45	480.45				
8:50	480.45				
8:55	480.45				
9:00	480.45				
9:05	480.45				
9:15	480.45				
9:25	480.46				
9:35	480.46				
9:50	480.46				
10:05	480.46				
10:20	480.46				
10:35	480.46				
10:50	480.46				
11:05	480.46				
11:20	480.45				
11:35	480.45				
11:50					
12:05					
12:20					
12:35					
12:50					

5 MINS

10 MINS

15 MINS

Extraction Well Completion Diagram KAFB-106EX2

Installation Start Date/Time: 2/21/17@1622
Installation End Date/Time: 2/26/17@1628
Completion Date: 4/19/17

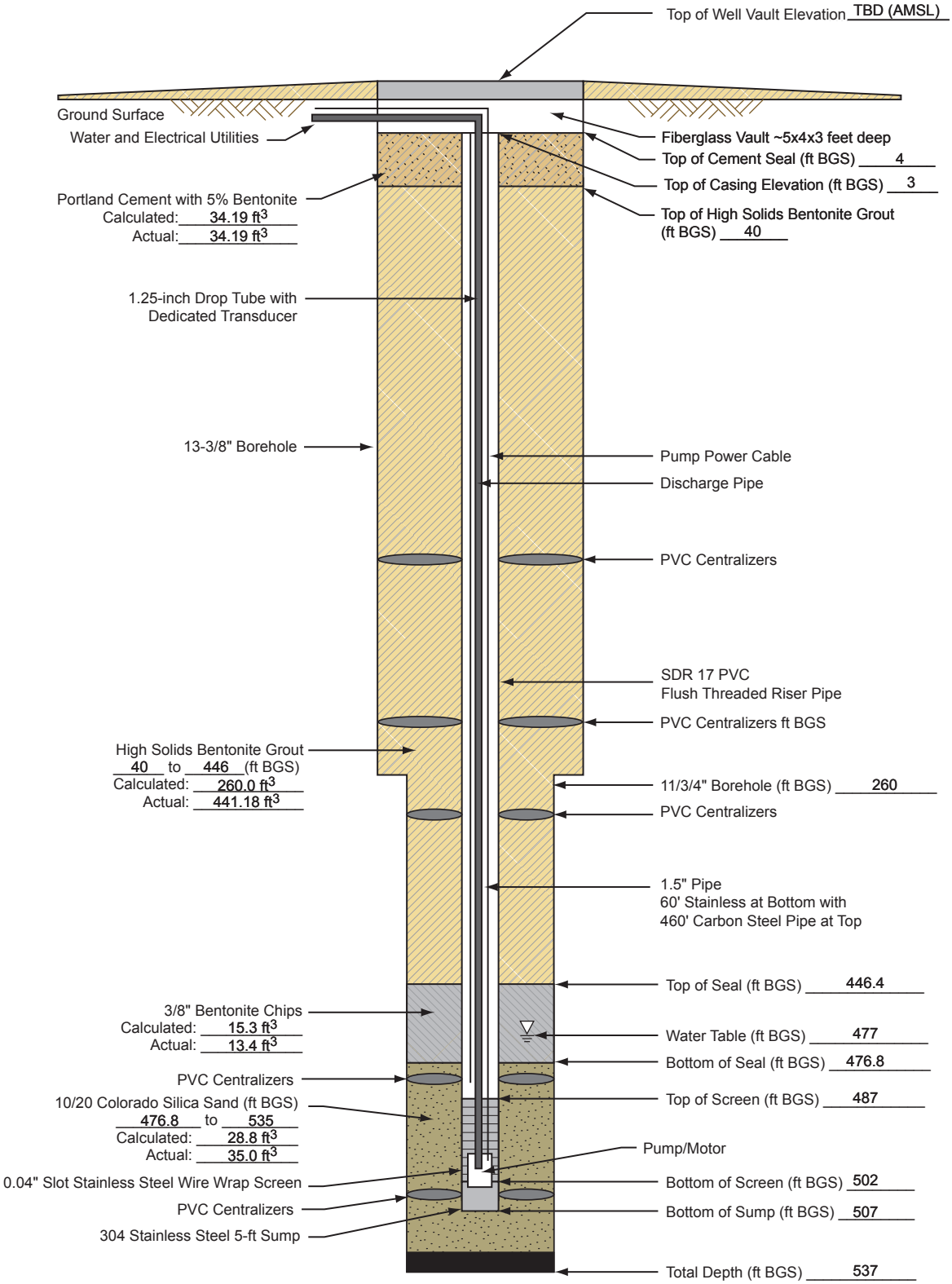

(4,816.90) = *Elevations are NAVD 88 Datum values based on NGS Control Station "Hanger", Elevation = 5,343.43 ft. GPS/RTK methods and GEO1D99 model were used to determine elevations of all surveyed points.*

Not to Scale
BGS = Below Ground Surface

500433_03050100_A11

Borehole ID: KAFB-106EX2

Client: US Army Corps of Engineers
Project Location: KAFB, Albuquerque, NM
Project Name: KAFB RAPID SWMU ST-106/SS-111
Project Number: 500433

Date Started: 2/21/2017
Date TD Reached: 2/26/17
Date Completed: 4/19/2017

Ground Elevation AMSL (ft): Not Recorded
Y Coordinate:
X Coordinate:

Hole Diameter Upper (in.): 13-3/8
Hole Diameter Lower (in.): 11-3/4
Surface Completion Type: Vault

Groundwater Levels BGS (ft):
At Time of Drilling: 477.00
At End of Drilling: Not Recorded
After Drilling: 476.60

Drillling Contractor: Cascade Drilling
Drilling Method: Air Rotary Casing Hammer
Logged By: T. Richards

Depth (ft)	Sample Type	Number	Headspace PID	Lithologic Log	Material Description	U.S.C.S.	Well Diagram	Remarks
0					SILT with Gravel (ML); based on water knief.		- Vault - Top of Casing - Top of Portland Cement with Bentonite	Borehole was pot holed with air knife to 5 feet bgs. No cuttings returned.
5					SILT with Gravel (ML); yellowish red (5YR 4/6); dry; 80% silt; 20% fine gravel to 1/2"; subangular to rounded; trace coarse sand. Note: gravel is mafics and granitic minerals.			Begin drilling with 13-3/8" drive casing @ 1622 on 2/21/17. Driller is using under reamer on downhole hammer, roller stabilizer, and two drill collars. Cuttings brought to surface will be biased fine.
10					Same as above (5 ft).	ML		
15					Same as above (5 ft); 70% silt; 30% gravel to 1".			
20					Gravelly SILT (ML); light reddish brown (5YR 6/4); dry; 60% silt; 30% fine to coarse gravel to 1"; 10% coarse sand; trace medium sand. Note: gravel is mafics and granitic minerals. Large gravel fragments present.		- Portland Cement with Bentonite	No water added downhole. Kelly down @ 1638, new 20' connection @ 1644. PID = 0.1 ppm @ cyclone and BZ.
25					Sandy lean CLAY (CL); light brown (7.5YR 6/3); slightly moist; 70% clay; 30% fine to coarse sand; trace gravel to 1/4".	CL		No water added. Hammering downhole.
30								

BOREHOLE_LOG - CB&I_DRILLING.GDT - 5/9/17 16:28 - Z:\KAFB RAPID\GINT\KAFB_RAPID_11-1-2016.GPJ

Borehole ID: KAFB-106EX2

Client: US Army Corps of Engineers
Project Location: KAFB, Albuquerque, NM
Project Name: KAFB RAPID SWMU ST-106/SS-111
Project Number: 500433

Date Started: 2/21/2017
Date TD Reached: 2/26/17
Date Completed: 4/19/2017

Ground Elevation AMSL (ft): Not Recorded
Y Coordinate:
X Coordinate:

Hole Diameter Upper (in.): 13-3/8
Hole Diameter Lower (in.): 11-3/4
Surface Completion Type: Vault

Groundwater Levels BGS (ft):
At Time of Drilling: 477.00
At End of Drilling: Not Recorded
After Drilling: 476.60

Drillling Contractor: Cascade Drilling
Drilling Method: Air Rotary Casing Hammer
Logged By: T. Richards

Depth (ft)	Sample Type	Number	Headspace PID	Lithologic Log	Material Description	U.S.C.S.	Well Diagram	Remarks
30					Gravelly SILT (ML); light reddish brown (5YR 6/4); slightly moist; 60% silt; trace clay; 40% fine gravel to 1/2"; subangular to rounded; trace medium to coarse sand.	ML	Portland Cement with Bentonite; Top of High Solids Bentonite Grout	Hammering downhole.
35					Same as above (30 ft).			Kelly down @ 1701. End of 2/21/17. Resume drilling @ 0923 on 2/22/17.
40					Fat CLAY with Sand (CH); light brown (7.5YR 6/4); slightly moist; medium plasticity; 75% clay; 25% fine to coarse sand.	CH		PID = 0.0 ppm @ cyclone and BZ.
45					Gravelly SILT (ML); reddish brown (5YR 5/4); dry; 60% silt; 20% fine to medium sand; trace coarse sand; 20% fine gravel to 1/4".	ML		Hammering downhole; no water added downhole.
50					Same as above (43 ft).			PID = 0.0 ppm @ cyclone and BZ.
55					Same as above (43 ft).			Kelly down @ 1008, new 20' connection @ 1052.
60								

BOREHOLE_LOG - CB&I_DRILLING.GDT - 5/9/17 16:28 - Z:\KAFB RAPID\GINT\KAFB_RAPID_11-1-2016.GPJ

Borehole ID: KAFB-106EX2

Client: US Army Corps of Engineers
Project Location: KAFB, Albuquerque, NM
Project Name: KAFB RAPID SWMU ST-106/SS-111
Project Number: 500433

Date Started: 2/21/2017
Date TD Reached: 2/26/17
Date Completed: 4/19/2017

Ground Elevation AMSL (ft): Not Recorded
Y Coordinate:
X Coordinate:

Hole Diameter Upper (in.): 13-3/8
Hole Diameter Lower (in.): 11-3/4
Surface Completion Type: Vault

Groundwater Levels BGS (ft):
At Time of Drilling: 477.00
At End of Drilling: Not Recorded
After Drilling: 476.60

Drillling Contractor: Cascade Drilling
Drilling Method: Air Rotary Casing Hammer
Logged By: T. Richards

Depth (ft)	Sample Type	Number	Headspace PID	Lithologic Log	Material Description	U.S.C.S.	Well Diagram	Remarks
60					Sandy SILT (ML); reddish yellow (7.5YR 6/6); dry; 70% silt; 25% fine to coarse sand; 5% fine gravel to 1/4"; angular to rounded.	ML		PID = 0.1 ppm @ cyclone and BZ.
65					Same as above (60 ft).			Hammering downhole and with casing hammer.
70					Same as above (60 ft).			PID = 0.1 ppm @ cyclone and BZ.
75								No water added downhole.
					Sandy lean CLAY (CL); yellowish red (5YR 5/6); slightly moist; 70% clay; 25% fine to medium sand; 5% fine gravel to 1/8".	CL	High Solids Bentonite Grout	Kelly down @ 1102, new 20' connection @ 1110.
80					Same as above (75 ft).			PID = 0.1 ppm @ cyclone and BZ.
85					Sandy SILT with Gravel (ML); pink (5YR 7/4); 40% silt; 40% fine to medium sand; 20% gravel. Note: gravel is fragmented and coated with silt.	ML		Hammering downhole and with casing hammer.
90								

BOREHOLE_LOG - CB&I_DRILLING.GDT - 5/9/17 16:28 - Z:\KAFB RAPID\GINT\KAFB_RAPID_11-1-2016.GPJ

Borehole ID: KAFB-106EX2

Client: US Army Corps of Engineers
Project Location: KAFB, Albuquerque, NM
Project Name: KAFB RAPID SWMU ST-106/SS-111
Project Number: 500433

Date Started: 2/21/2017
Date TD Reached: 2/26/17
Date Completed: 4/19/2017

Ground Elevation AMSL (ft): Not Recorded
Y Coordinate:
X Coordinate:

Hole Diameter Upper (in.): 13-3/8
Hole Diameter Lower (in.): 11-3/4
Surface Completion Type: Vault

Groundwater Levels BGS (ft):
At Time of Drilling: 477.00
At End of Drilling: Not Recorded
After Drilling: 476.60

Drillling Contractor: Cascade Drilling
Drilling Method: Air Rotary Casing Hammer
Logged By: T. Richards

Depth (ft)	Sample Type	Number	Headspace PID	Lithologic Log	Material Description	U.S.C.S.	Well Diagram	Remarks
90					Sandy SILT with Gravel (ML); pink (5YR 7/4); 40% silt; 40% fine to medium sand; 20% gravel. Note: gravel is fragmented and coated with silt.	ML		No water added.
95					Sandy lean CLAY (CL); brown (7.5YR 5/4); nonplastic; 70% clay; 30% fine sand; trace gravel fragments. Note: gravel is mafics.	CL		Kelly down @ 1140, new 20' connection @ 1253.
100					Poorly graded SAND (SP); light brown (7.5YR 6/4); dry; 100% fine sand; trace medium and coarse sand; trace fine gravel to 1/4"; subangular to rounded. Note: gravel is mafics and granitic minerals.	SP		PID = 0.1 ppm @ cyclone and BZ.
105					Same as above (98 ft).	SP	High Solids Bentonite Grout	Continuous hammering.
110					Same as above (98 ft).	SP		PID = 0.1 ppm @ cyclone and BZ.
115					Same as above (98 ft).	SP		Kelly down @ 1305, new 20' connection @ 1418.
120					Lean CLAY with Sand (CL); strong brown (7.5YR 5/6); slightly moist; 60% clay; 20% silt; 20% fine sand.	CL		

BOREHOLE_LOG - CB&I_DRILLING.GDT - 5/9/17 16:28 - Z:\KAFB RAPID\GINT\KAFB_RAPID_11-1-2016.GPJ

Borehole ID: KAFB-106EX2

Client: US Army Corps of Engineers
Project Location: KAFB, Albuquerque, NM
Project Name: KAFB RAPID SWMU ST-106/SS-111
Project Number: 500433

Date Started: 2/21/2017
Date TD Reached: 2/26/17
Date Completed: 4/19/2017

Ground Elevation AMSL (ft): Not Recorded
Y Coordinate:
X Coordinate:

Hole Diameter Upper (in.): 13-3/8
Hole Diameter Lower (in.): 11-3/4
Surface Completion Type: Vault

Groundwater Levels BGS (ft):
At Time of Drilling: 477.00
At End of Drilling: Not Recorded
After Drilling: 476.60

Drillling Contractor: Cascade Drilling
Drilling Method: Air Rotary Casing Hammer
Logged By: T. Richards

Depth (ft)	Sample Type	Number	Headspace PID	Lithologic Log	Material Description	U.S.C.S.	Well Diagram	Remarks
120					Lean CLAY with Sand (CL); strong brown (7.5YR 5/6); slightly moist; 60% clay; 20% silt; 20% fine sand.			PID = 0.1 ppm @ cyclone and BZ.
125					Same as above (120 ft).			Hammering downhole and with casing hammer.
130					Same as above (120 ft).			No water added.
135					Same as above (120 ft).	CL	High Solids Bentonite Grout	Kelly down @ 1433, new 20' connection @ 1439.
140					Same as above (120 ft).			PID = 0.1 ppm @ cyclone and BZ.
145					Same as above (120 ft).			Hammering.
150								

BOREHOLE_LOG - CB&I_DRILLING.GDT - 5/9/17 16:28 - Z:\KAFB RAPID\GINT\KAFB_RAPID_11-1-2016.GPJ

Borehole ID: KAFB-106EX2

Client: US Army Corps of Engineers
Project Location: KAFB, Albuquerque, NM
Project Name: KAFB RAPID SWMU ST-106/SS-111
Project Number: 500433

Date Started: 2/21/2017
Date TD Reached: 2/26/17
Date Completed: 4/19/2017

Ground Elevation AMSL (ft): Not Recorded
Y Coordinate:
X Coordinate:

Hole Diameter Upper (in.): 13-3/8
Hole Diameter Lower (in.): 11-3/4
Surface Completion Type: Vault

Groundwater Levels BGS (ft):
At Time of Drilling: 477.00
At End of Drilling: Not Recorded
After Drilling: 476.60

Drillling Contractor: Cascade Drilling
Drilling Method: Air Rotary Casing Hammer
Logged By: T. Richards

Depth (ft)	Sample Type	Number	Headspace PID	Lithologic Log	Material Description	U.S.C.S.	Well Diagram	Remarks
150					Lean CLAY with Sand (CL); strong brown (7.5YR 5/6); slightly moist; 60% clay; 20% silt; 20% fine sand.	CL		
155					Poorly graded SAND (SP); brown (7.5YR 5/3); dry; 95% fine sand; trace medium sand; 5% gravel fragments.	SP		Kelly down @ 1459, new 20' connection @ 1525.
160								PID = 0.1 ppm @ cyclone and BZ.
165					Lean CLAY with Sand (CL); reddish yellow (7.5YR 6/6); slightly moist; nonplastic; 80% clay; 20% fine to medium sand.	CL	High Solids Bentonite Grout	Added 20 gallons of water downhole to clear clay plug from under reamer.
170					Same as above (163 ft).			
175					Sandy SILT (ML); light brown (7.5YR 6/4); dry; 60% silt; 40% fine to coarse sand; trace gravel fragments.	ML		
					Silty SAND (SM); light brown (7.5YR 6/4); dry; 80% fine to coarse sand; 20% silt.	SM		
180					Poorly graded SAND (SP); light brown (7.5YR 6/4); dry; 95% fine sand; trace medium and coarse sand; 5% gravel fragments.	SP		Kelly down @ 1636, new 20' connection @ 1649.

BOREHOLE_LOG - CB&I_DRILLING.GDT - 5/9/17 16:28 - Z:\KAFB RAPID\GINT\KAFB_RAPID_11-1-2016.GPJ

Borehole ID: KAFB-106EX2

Client: US Army Corps of Engineers
Project Location: KAFB, Albuquerque, NM
Project Name: KAFB RAPID SWMU ST-106/SS-111
Project Number: 500433

Date Started: 2/21/2017
Date TD Reached: 2/26/17
Date Completed: 4/19/2017

Ground Elevation AMSL (ft): Not Recorded
Y Coordinate:
X Coordinate:

Hole Diameter Upper (in.): 13-3/8
Hole Diameter Lower (in.): 11-3/4
Surface Completion Type: Vault

Groundwater Levels BGS (ft):
At Time of Drilling: 477.00
At End of Drilling: Not Recorded
After Drilling: 476.60

Drillling Contractor: Cascade Drilling
Drilling Method: Air Rotary Casing Hammer
Logged By: T. Richards

Depth (ft)	Sample Type	Number	Headspace PID	Lithologic Log	Material Description	U.S.C.S.	Well Diagram	Remarks
180					Poorly graded SAND (SP); light brown (7.5YR 6/4); dry; 95% fine sand; trace medium and coarse sand; 5% gravel fragments.	SP		PID = 0.1 ppm @ cyclone and BZ.
185					Well-graded SAND (SW); light brown (7.5YR 6/3); dry; 95% fine to coarse sand; trace gravel fragments; 5% silt.	SW		Hammering; slow rate of penetration.
190					Same as above (184 ft).			
195					Poorly graded SAND (SP); light brown (7.5YR 6/4); dry; 100% fine sand; trace medium and coarse sand; trace silt.	SP	High Solids Bentonite Grout	
200					Same as above (192 t).			Kelly down @ 1525. End of 2/22/17. Resume drilling @ 1103 on 2/23/17.
205								PID = 0.0 ppm @ cyclone and BZ.
210					Silty SAND (SM); light brown (7.5YR 6/4); dry; 75% fine sand; trace medium and coarse sand; 25% silt.	SM		Hammering; no water added downhole.

BOREHOLE_LOG - CB&I_DRILLING.GDT - 5/9/17 16:28 - Z:\KAFB RAPID\GINT\KAFB_RAPID_11-1-2016.GPJ

Borehole ID: KAFB-106EX2

Client: US Army Corps of Engineers
Project Location: KAFB, Albuquerque, NM
Project Name: KAFB RAPID SWMU ST-106/SS-111
Project Number: 500433

Date Started: 2/21/2017
Date TD Reached: 2/26/17
Date Completed: 4/19/2017

Ground Elevation AMSL (ft): Not Recorded
Y Coordinate:
X Coordinate:

Hole Diameter Upper (in.): 13-3/8
Hole Diameter Lower (in.): 11-3/4
Surface Completion Type: Vault

Groundwater Levels BGS (ft):
At Time of Drilling: 477.00
At End of Drilling: Not Recorded
After Drilling: 476.60

Drillling Contractor: Cascade Drilling
Drilling Method: Air Rotary Casing Hammer
Logged By: T. Richards

Depth (ft)	Sample Type	Number	Headspace PID	Lithologic Log	Material Description	U.S.C.S.	Well Diagram	Remarks
210					Sandy SILT (ML); light brown (7.5YR 6/3); dry; 70% silt; 30% fine to medium sand; trace coarse sand.	ML		Continuous hammering; no water added downhole.
215					Same as above (210 ft).			Kelly down @ 1149, new 20' connection @ 1300.
220					Well-graded SAND with Silt (SW-SM); brown (7.5YR 5/4); dry; 90% fine to coarse sand; 10% silt.	SW-SM		PID = 0.1 ppm @ cyclone and BZ.
225					Sandy lean CLAY (CL); brown (7.5YR 5/3); nonplastic; 60% clay; 40% fine to coarse sand; trace gravel fragments. @ 225 ft: Possible GRAVEL lens.	CL	High Solids Bentonite Grout	@ 225 - 240 ft: almost no drill cuttings returned.
230					Same as above (222 ft).			
235					Same as above (222 ft).			Kelly down @ 1410, new 20' connection @ 1420.
240								

BOREHOLE_LOG - CB&I_DRILLING.GDT - 5/9/17 16:28 - Z:\KAFB RAPID\GINT\KAFB_RAPID_11-1-2016.GPJ

Borehole ID: KAFB-106EX2

Client: US Army Corps of Engineers
Project Location: KAFB, Albuquerque, NM
Project Name: KAFB RAPID SWMU ST-106/SS-111
Project Number: 500433

Date Started: 2/21/2017
Date TD Reached: 2/26/17
Date Completed: 4/19/2017

Ground Elevation AMSL (ft): Not Recorded
Y Coordinate:
X Coordinate:

Hole Diameter Upper (in.): 13-3/8
Hole Diameter Lower (in.): 11-3/4
Surface Completion Type: Vault

Groundwater Levels BGS (ft):
At Time of Drilling: 477.00
At End of Drilling: Not Recorded
After Drilling: 476.60

Drillling Contractor: Cascade Drilling
Drilling Method: Air Rotary Casing Hammer
Logged By: T. Richards

Depth (ft)	Sample Type	Number	Headspace PID	Lithologic Log	Material Description	U.S.C.S.	Well Diagram	Remarks
240					Sandy lean CLAY (CL); brown (7.5YR 5/3); nonplastic; 60% clay; 40% fine to coarse sand; trace gravel fragments.	CL		Added approximately 200 gallons of water downhole.
245								
250					Silty SAND with Gravel (SM); brown (7.5YR 5/4); 40% fine to coarse sand; 20% gravel fragments; 40% silt. Note: possibly interbedded GRAVEL lens.	SM		Stop drilling @ 1450 on 2/23/17 due to casing hammer failure. Resume drilling @ 0837 on 2/24/17.
255					Same as above (247 ft).		High Solids Bentonite Grout	Added approximately 40 gallons of water downhole to lift cuttings.
260					Silty GRAVEL (GM); 60% gravel fragments; 40% silt.	GM		Kelly down @ 0903, new 5' connection @ 0914. Trip to telescope in 11-3/4" casing. Resume drilling @ 1640. PID = 0.1 ppm @ cyclone and BZ.
265					Lean CLAY with Sand (CL); reddish brown (5YR 5/4); low plasticity; 75% clay; 25% fine to medium sand.	CL		Poor cuttings returned.
270								

BOREHOLE_LOG - CB&I_DRILLING.GDT - 5/9/17 16:28 - Z:\KAFB RAPID\GINT\KAFB_RAPID_11-1-2016.GPJ

Borehole ID: KAFB-106EX2

Client: US Army Corps of Engineers
Project Location: KAFB, Albuquerque, NM
Project Name: KAFB RAPID SWMU ST-106/SS-111
Project Number: 500433

Date Started: 2/21/2017
Date TD Reached: 2/26/17
Date Completed: 4/19/2017

Ground Elevation AMSL (ft): Not Recorded
Y Coordinate:
X Coordinate:

Hole Diameter Upper (in.): 13-3/8
Hole Diameter Lower (in.): 11-3/4
Surface Completion Type: Vault

Groundwater Levels BGS (ft):
At Time of Drilling: 477.00
At End of Drilling: Not Recorded
After Drilling: 476.60

Drillling Contractor: Cascade Drilling
Drilling Method: Air Rotary Casing Hammer
Logged By: T. Richards

Depth (ft)	Sample Type	Number	Headspace PID	Lithologic Log	Material Description	U.S.C.S.	Well Diagram	Remarks
270					Lean CLAY with Sand (CL); reddish brown (5YR 5/4); low plasticity; 75% clay; 25% fine to medium sand.	CL		Poor cuttings returned.
275					Same as above (270 ft).	CL		Kelly down @ 1715. End of 2/24/17. Resume drilling @ 0807 on 2/25/17.
280					Same as above (270 ft).	CL		PID = 0.1 ppm @ cyclone and BZ.
285					Well-graded SAND with Gravel (SW); brown (7.5YR 5/4); dry to slightly moist; 85% fine to coarse sand; 15% fine gravel to 1/4". Note: lots of gravel fragments.	SW	High Solids Bentonite Grout	Hammering.
290					Same as above (285 ft).	SW		Poor cuttings returned.
295					Same as above (285 ft).	SW		No water added downhole. Good returns. Kelly down @ 0905, new 20' connection @ 0928.
300								

BOREHOLE_LOG - CB&I_DRILLING.GDT - 5/9/17 16:28 - Z:\KAFB RAPID\GINT\KAFB_RAPID_11-1-2016.GPJ

Borehole ID: KAFB-106EX2

Client: US Army Corps of Engineers
Project Location: KAFB, Albuquerque, NM
Project Name: KAFB RAPID SWMU ST-106/SS-111
Project Number: 500433

Date Started: 2/21/2017
Date TD Reached: 2/26/17
Date Completed: 4/19/2017

Ground Elevation AMSL (ft): Not Recorded
Y Coordinate:
X Coordinate:

Hole Diameter Upper (in.): 13-3/8
Hole Diameter Lower (in.): 11-3/4
Surface Completion Type: Vault

Groundwater Levels BGS (ft):
At Time of Drilling: 477.00
At End of Drilling: Not Recorded
After Drilling: 476.60

Drillling Contractor: Cascade Drilling
Drilling Method: Air Rotary Casing Hammer
Logged By: T. Richards

Depth (ft)	Sample Type	Number	Headspace PID	Lithologic Log	Material Description	U.S.C.S.	Well Diagram	Remarks
300					Well-graded SAND with Gravel (SW); brown (7.5YR 5/4); dry to slightly moist; 85% fine to coarse sand; 15% fine gravel to 1/4". Note: lots of gravel fragments.	SW		PID = 0.1 ppm @ cyclone and BZ.
305								No hammering; no water added downhole.
					Same as above (300 ft).			
310								
					Same as above (300 ft).			Hammering downhole only. Add approximately 50 gallons of water to remove clay from hammer and bit.
315							High Solids Bentonite Grout	
					Well-graded SAND with Silt and Gravel (SW-SM); brown (7.5YR 4/4); 70% fine to coarse sand; 20% fine gravel to 1/2"; 10% silt.	SW-SM		Kelly down @ 1100, change to tricone bit. New 20' connection @ 1414.
320								PID = 0.1 ppm @ cyclone and 0.0 ppm @ BZ.
325					Same as above (317 ft).			
330								

BOREHOLE_LOG - CB&I_DRILLING.GDT - 5/9/17 16:28 - Z:\KAFB RAPID\GINT\KAFB_RAPID_11-1-2016.GPJ

Borehole ID: KAFB-106EX2

Client: US Army Corps of Engineers
Project Location: KAFB, Albuquerque, NM
Project Name: KAFB RAPID SWMU ST-106/SS-111
Project Number: 500433

Date Started: 2/21/2017
Date TD Reached: 2/26/17
Date Completed: 4/19/2017

Ground Elevation AMSL (ft): Not Recorded
Y Coordinate:
X Coordinate:

Hole Diameter Upper (in.): 13-3/8
Hole Diameter Lower (in.): 11-3/4
Surface Completion Type: Vault

Groundwater Levels BGS (ft):
At Time of Drilling: 477.00
At End of Drilling: Not Recorded
After Drilling: 476.60

Drillling Contractor: Cascade Drilling
Drilling Method: Air Rotary Casing Hammer
Logged By: T. Richards

Depth (ft)	Sample Type	Number	Headspace PID	Lithologic Log	Material Description	U.S.C.S.	Well Diagram	Remarks
330					Well-graded SAND with Silt and Gravel (SW-SM); brown (7.5YR 4/4); dry to moist; 70% fine to coarse sand; 20% fine gravel to 1/2"; 10% silt.	SW-SM		Slow rate of penetration.
335					Same as above (330 ft).			Hammering; no water added downhole.
340								Kelly down @ 1543, new 20' connection @ 1611.
					Poorly graded SAND (SP); pink (7.5YR 7/3); dry; 100% fine sand; trace medium and coarse sand.	SP		PID = 0.1 ppm @ cyclone and 0.0 ppm @ BZ.
345					Well-graded SAND with Gravel (SW); brown (7.5YR 4/4); dry; 75% fine to coarse sand; 25% fine gravel to 1/2"; trace silt. Note: interbedded SAND (75%) with Silt (10%) and Gravel (15%).	SW	High Solids Bentonite Grout	Hammering; no water added downhole.
350					Same as above (344 ft).			Rate of penetration increases.
355					Same as above (344 ft).			Kelly down @ 1720, new 20' connection @ 1730.
360								

BOREHOLE_LOG - CB&I_DRILLING.GDT - 5/9/17 16:28 - Z:\KAFB RAPID\GINT\KAFB_RAPID_11-1-2016.GPJ

Borehole ID: KAFB-106EX2

Client: US Army Corps of Engineers
Project Location: KAFB, Albuquerque, NM
Project Name: KAFB RAPID SWMU ST-106/SS-111
Project Number: 500433

Date Started: 2/21/2017
Date TD Reached: 2/26/17
Date Completed: 4/19/2017

Ground Elevation AMSL (ft): Not Recorded
Y Coordinate:
X Coordinate:

Hole Diameter Upper (in.): 13-3/8
Hole Diameter Lower (in.): 11-3/4
Surface Completion Type: Vault

Groundwater Levels BGS (ft):
At Time of Drilling: 477.00
At End of Drilling: Not Recorded
After Drilling: 476.60

Drillling Contractor: Cascade Drilling
Drilling Method: Air Rotary Casing Hammer
Logged By: T. Richards

Depth (ft)	Sample Type	Number	Headspace PID	Lithologic Log	Material Description	U.S.C.S.	Well Diagram	Remarks
360					Well-graded SAND with Gravel (SW); brown (7.5YR 4/4); dry; 75% fine to coarse sand; 25% fine gravel to 1/2"; trace silt. Note: interbedded SAND (75%) with Silt (10%) and Gravel (15%).	SW		PID = 0.1 ppm @ cyclone and 0.0 ppm @ BZ.
365					Same as above (360 ft).	SW		Hammering; no water added downhole.
370					Same as above (360 ft).	SW		Good cuttings returned.
375							High Solids Bentonite Grout	
380					Well-graded SAND with Silt and Gravel (SW-SM); brown (7.5YR 4/4); 70% fine to coarse sand; 20% fine gravel to 1/2"; 10% silt.	SW-SM		Kelly down @ 1800. End of 2/25/17. Resume drilling @ 0900 on 2/26/17.
385					Same as above (377 ft).	SW-SM		PID = 0.1 ppm @ cyclone and 0.0 ppm @ BZ. Hammering. No water added downhole.
390								

BOREHOLE_LOG - CB&I_DRILLING.GDT - 5/9/17 16:28 - Z:\KAFB RAPID\GINT\KAFB_RAPID_11-1-2016.GPJ

Borehole ID: KAFB-106EX2

Client: US Army Corps of Engineers
Project Location: KAFB, Albuquerque, NM
Project Name: KAFB RAPID SWMU ST-106/SS-111
Project Number: 500433

Date Started: 2/21/2017
Date TD Reached: 2/26/17
Date Completed: 4/19/2017

Ground Elevation AMSL (ft): Not Recorded
Y Coordinate:
X Coordinate:

Hole Diameter Upper (in.): 13-3/8
Hole Diameter Lower (in.): 11-3/4
Surface Completion Type: Vault

Groundwater Levels BGS (ft):
At Time of Drilling: 477.00
At End of Drilling: Not Recorded
After Drilling: 476.60

Drillling Contractor: Cascade Drilling
Drilling Method: Air Rotary Casing Hammer
Logged By: T. Richards

Depth (ft)	Sample Type	Number	Headspace PID	Lithologic Log	Material Description	U.S.C.S.	Well Diagram	Remarks
390					Well-graded SAND with Silt and Gravel (SW-SM); brown (7.5YR 4/4); 70% fine to coarse sand; 20% fine gravel to 1/2"; 10% silt.	SW-SM		
395					Same as above (390 ft).			Kelly down @ 0920, new 20' connection @ 0928.
400					Same as above (390 ft).			PID = 0.1 ppm @ cyclone and 0.0 ppm @ BZ.
405							High Solids Bentonite Grout	
410					Poorly graded SAND with Silt (SP-SM); brown (7.5YR 5/3); dry; 90% fine sand; trace medium and coarse sand; 10% silt.	SP-SM		Stop drilling to repair casing hammer.
415					Same as above (407 ft).			
420					Well-graded SAND with Silt and Gravel (SW-SM); pinkish gray (7.5YR 6/2); dry; 70% fine to coarse sand; 20% gravel to 1/4"; angular to rounded; 10% silt.	SW-SM		Kelly down @ 1047, new 20' connection @ 1128. Conduct rig repairs.

BOREHOLE_LOG - CB&I_DRILLING.GDT - 5/9/17 16:28 - Z:\KAFB RAPID\GINT\KAFB_RAPID_11-1-2016.GPJ

Borehole ID: KAFB-106EX2

Client: US Army Corps of Engineers
Project Location: KAFB, Albuquerque, NM
Project Name: KAFB RAPID SWMU ST-106/SS-111
Project Number: 500433

Date Started: 2/21/2017
Date TD Reached: 2/26/17
Date Completed: 4/19/2017

Ground Elevation AMSL (ft): Not Recorded
Y Coordinate:
X Coordinate:

Hole Diameter Upper (in.): 13-3/8
Hole Diameter Lower (in.): 11-3/4
Surface Completion Type: Vault

Groundwater Levels BGS (ft):
At Time of Drilling: 477.00
At End of Drilling: Not Recorded
After Drilling: 476.60

Drillling Contractor: Cascade Drilling
Drilling Method: Air Rotary Casing Hammer
Logged By: T. Richards

Depth (ft)	Sample Type	Number	Headspace PID	Lithologic Log	Material Description	U.S.C.S.	Well Diagram	Remarks
420					Well-graded SAND with Silt and Gravel (SW-SM); pinkish gray (7.5YR 6/2); dry; 70% fine to coarse sand; 20% fine gravel to 1/4"; angular to rounded; 10% silt. Note: gravel is mafics and granitic minerals.	SW-SM		PID = 0.2 ppm @ cyclone and 0.1 ppm @ BZ.
425								Hammering; no water added downhole.
430					Same as above (420 ft).			PID = 0.1 ppm @ cyclone and BZ.
435					Same as above (420 ft).		High Solids Bentonite Grout	Kelly down @ 1204, new 20' connection @ 1244.
440					Same as above (420 ft).			PID = 0.2 ppm @ cyclone and 0.1 ppm @ BZ.
445					Same as above (420 ft).		Top of Bentonite Seal	Hammering; no water added downhole.
450								

BOREHOLE_LOG - CB&I_DRILLING.GDT - 5/9/17 16:28 - Z:\KAFB RAPID\GINT\KAFB_RAPID_11-1-2016.GPJ

Borehole ID: KAFB-106EX2

Client: US Army Corps of Engineers
Project Location: KAFB, Albuquerque, NM
Project Name: KAFB RAPID SWMU ST-106/SS-111
Project Number: 500433

Date Started: 2/21/2017
Date TD Reached: 2/26/17
Date Completed: 4/19/2017

Ground Elevation AMSL (ft): Not Recorded
Y Coordinate:
X Coordinate:

Hole Diameter Upper (in.): 13-3/8
Hole Diameter Lower (in.): 11-3/4
Surface Completion Type: Vault

Groundwater Levels BGS (ft):
At Time of Drilling: 477.00
At End of Drilling: Not Recorded
After Drilling: 476.60

Drillling Contractor: Cascade Drilling
Drilling Method: Air Rotary Casing Hammer
Logged By: T. Richards

Depth (ft)	Sample Type	Number	Headspace PID	Lithologic Log	Material Description	U.S.C.S.	Well Diagram	Remarks
450					Well-graded SAND with Silt and Gravel (SW-SM); pinkish gray (7.5YR 6/2); dry; 70% fine to coarse sand; 20% fine gravel to 1/4"; angular to rounded; 10% silt. Note: gravel is mafics and granitic minerals.	SW-SM		Hammering; no water added downhole.
455					Boulders or large cobbles.			
					Silty SAND (SM); light brown (7.5YR 6/3); dry; 75% fine to coarse sand; 5% fine gravel to 1/8"; subrounded to rounded; 20% silt.	SM		Kelly down @ 1326, new 20' connection @ 1350.
460					Same as above (456 ft).			PID = 0.2 ppm @ cyclone and 0.1 ppm @ BZ.
							Bentonite Seal	
465			2.5		Same as above (456 ft). Note: slight fuel odor.			PID = 0.2 ppm @ cyclone and 0.1 ppm @ BZ.
470			2.9		Same as above (456 ft); moist. Note: slight fuel odor.			
475			3.3		Well-graded SAND with Silt (SW-SM); brown (7.5YR 4/3); moist; 90% fine to coarse sand; trace fine gravel to 1/8"; 10% silt. Note: slight fuel odor.	SW-SM	Top of 10/20 Sand	PID = 2.7 ppm @ cyclone and 0.2 ppm @ BZ. Kelly down @ 1420, new 20' connection @ 1429. Top of groundwater @ 477 feet bgs.
480								

BOREHOLE_LOG - CB&I_DRILLING.GDT - 5/9/17 16:28 - Z:\KAFB RAPID\GINT\KAFB_RAPID_11-1-2016.GPJ

Borehole ID: KAFB-106EX2

Client: US Army Corps of Engineers
Project Location: KAFB, Albuquerque, NM
Project Name: KAFB RAPID SWMU ST-106/SS-111
Project Number: 500433

Date Started: 2/21/2017
Date TD Reached: 2/26/17
Date Completed: 4/19/2017

Ground Elevation AMSL (ft): Not Recorded
Y Coordinate:
X Coordinate:

Hole Diameter Upper (in.): 13-3/8
Hole Diameter Lower (in.): 11-3/4
Surface Completion Type: Vault

Groundwater Levels BGS (ft):
At Time of Drilling: 477.00
At End of Drilling: Not Recorded
After Drilling: 476.60

Drillling Contractor: Cascade Drilling
Drilling Method: Air Rotary Casing Hammer
Logged By: T. Richards

Depth (ft)	Sample Type	Number	Headspace PID	Lithologic Log	Material Description	U.S.C.S.	Well Diagram	Remarks
480			3.9		Well-graded SAND with Silt (SW-SM); brown (7.5YR 4/3); wet; 90% fine to coarse sand; trace fine gravel to 1/8"; 10% silt. Note: Fuel odor.	SW-SM		Measurement based on level measured at monitoring well prior to drilling disturbance. PID = 44.7 ppm @ cyclone and 0.1 ppm @ BZ.
485			4.8		Same as above (480 ft). Note: strong fuel odor.		Top of Stainless Steel 0.040 Slot Screen	PID = 127.9 ppm @ cyclone and 0.3 ppm @ BZ.
490			19.5		Same as above (480 ft). Note: strong fuel odor.		Stainless Steel 0.040 Slot Screen	PID = 293.6 ppm @ cyclone and 33.5 ppm @ BZ.
495			111.9					PID = 227.9 ppm @ cyclone and 28.7 ppm @ BZ. Kelly down @ 1508, new 20' connection @ 1520.
500			31.2		Well-graded SAND with Gravel (SW); dark yellowish brown (10YR 4/4); wet; 75% fine to coarse sand; 25% fine gravel to 1/2"; subrounded to rounded; trace silt. Note: gravel is mafics and granitic minerals. Fuel odor.	SW	Bottom of Screen	PID = 125.4 ppm @ cyclone and 12.2 ppm @ BZ.
505			7.9		Same as above (497 ft).		Stainless Steel Sump Bottom of Sump	PID = 7.4 ppm @ cyclone and 4.2 ppm @ BZ.
510								

BOREHOLE_LOG - CB&I_DRILLING.GDT - 5/9/17 16:28 - Z:\KAFB RAPID\GINT\KAFB_RAPID_11-1-2016.GPJ

Borehole ID: KAFB-106EX2

Client: US Army Corps of Engineers
Project Location: KAFB, Albuquerque, NM
Project Name: KAFB RAPID SWMU ST-106/SS-111
Project Number: 500433

Date Started: 2/21/2017
Date TD Reached: 2/26/17
Date Completed: 4/19/2017

Ground Elevation AMSL (ft): Not Recorded
Y Coordinate:
X Coordinate:

Hole Diameter Upper (in.): 13-3/8
Hole Diameter Lower (in.): 11-3/4
Surface Completion Type: Vault

Groundwater Levels BGS (ft):
At Time of Drilling: 477.00
At End of Drilling: Not Recorded
After Drilling: 476.60

Drillling Contractor: Cascade Drilling
Drilling Method: Air Rotary Casing Hammer
Logged By: T. Richards

Depth (ft)	Sample Type	Number	Headspace PID	Lithologic Log	Material Description	U.S.C.S.	Well Diagram	Remarks
510			3.7		Well-graded SAND with Gravel (SW); dark yellowish brown (10YR 4/4); wet; 75% fine to coarse sand; 25% fine gravel to 1/2"; subrounded to rounded; trace silt. Note: gravel is mafics and granitic minerals. Fuel odor.			PID = 5.6 ppm @ cyclone and 2.8 ppm @ BZ.
515			4.1		Same as above (510 ft).			PID = 2.2 ppm @ cyclone and 2.4 ppm @ BZ. Kelly down @ 1556, new 20' connection @ 1608.
520			4.2		Same as above (510 ft).	SW		PID = 1.9 ppm @ cyclone and 2.2 ppm @ BZ.
525			2.1		Same as above (510 ft).			Poor cuttings returned. PID = 2.1 ppm @ cyclone and 0.8 ppm @ BZ.
530					No cuttings returned.			PID = 3.3 ppm @ cyclone and 1.0 ppm @ BZ.
535							Bottom of 10/20 Filter Pack Native Backfill Bottom of Rat Hole	PID = 2.9 ppm @ cyclone and 1.2 ppm @ BZ. Total depth = 537 feet bgs. Reached total depth @ 1628 on 2/26/17.
540								

BOREHOLE_LOG - CB&I_DRILLING.GDT - 5/9/17 16:28 - Z:\KAFB RAPID\GINT\KAFB_RAPID_11-1-2016.GPJ

Groundwater Extraction Well Development

Bailing KAFB 10GEX2 Crystal Hardee

Date	Time	Total Volume Bailed (gallons)	Imhoff Cone Measurement (mL sediment per L water)	Comments
4/12/17	1351	5	5	Began Bailing
	1356	10	10	- sand + silt
	1359	15	5	- sand + some filter pack
	1402	20	10	
	1406		5	
	1409		10	
	1417	40	30	- pulling more sand + filterpack from bottom
	1419		50	
	1422	50	70	- filter pack + silt
	1443		50	
	1454	70	15	
	1512	85	10	
	1516	90	38	
	1525	100	15	
	1540	105	20	
	1549	120	50	switch to smaller bailer
	1558		10	
	1609		5	
	1610	125	.5	
	1630		.5	
	1636		1	
	1641	130	.5	

Groundwater Extraction Well Development

Pumping KAFB10GEX2

Date	Time	Rate (gpm)	Depth to Water (ft BGS)	Volume Removed (gallons)	Temp (°C)	pH	EC (mS/cm)	Turbidity (NTU)	Specific Capacity (gpm/ft)	Comments
										▽@ 476.35 bTOC
4/13	1011	25	~~479.85~~	~~0~~	~~18.6~~		~~0.698~~			Pump is on
	1013		479.85	50	18.6		0.698			
	1016	25	479.79	125	20.2		0.667	107		
	1021	25	479.85	250					7.14	
	1026	25	479.95	375						
	1031	25	480.0	500						
	1036	25	480.05	625					6.7	
	1041	25	480.1	750						Pump off surging cycles
	1049									Pump on
	1052	25	479.80	800				26.9		
	1054		480.0	850						
	1056		480.05	900				13.6		
	1100 ~~1059~~		480.15	975						off - surge x2
	1100	Ø	476.4	975						
	1108			975						Pump on
	1111		479.85					23.7		
	1114				20.3		0.752			DO 1.36
	1115		480.05			7				
	1119		480.15	1,225						off - surge
	1231									on
	1134	25	479.9							
	1136	25			20.3	7	0.759	14.2		DO 1.50
	1137	25	480.1							
	1141	25	480.1	1,480	20.4	7	0.758	7.35		DO 1.44
	1142			1,505						Pump off x4
	1300	Ø	476.4	1,505	NR					static
	1306									Pump test / on
	1311	25.5	479.9		19.3	7.94	0.773	18.3		DO 2.16
	1313		480							
	1316	25.5	480.05	1,760	20.2	7.59	0.769	16.3		
	1321		480.15							
	1324		480.2							
	1326		480.25		20.2	7.47	0.777	3.56		P.82 ORP - 2.7
	1330		480.25							
	1332		480.26							
	1334		480.29		20.3	7.48	0.779	2.73		DO 1.58
	1336		480.3	2,525					8.8	Pump off

Groundwater Extraction Well Development

Pumping KAFB 106 EX2

Date	Time	Rate (gpm)	Depth to Water (ft BGS)	Volume Removed (gallons)	Temp (°C)	pH	EC (mS/cm)	Turbidity (NTU)	Specific Capacity (gpm/ft)	Comments
4/13/17	1403	25.5	479.9	2525						on
	1407	25.5	480.10		20.3	7.59	0.787	12.0		DO 1.79
	1413			2.780						off
	1422									on
	1424	25.5	480.05		20.7	7.53	0.804	20.2		2.18
	1430			3,035						off
1438	~~1449~~									on
1448	1445	25.5	480.50		20.2	7.46	0.795	4.42		
4/13	1450			3.290						off
	1459	25.5		3.290						on
	1509	25.5	480.35	3,545	20.2	7.45	0.798	4.25		off
	1517									
	1527		480.35		20.2	7.46	0.800	3.82		DO 1.74 ~~on~~ off
	1535			3.845						on
	545		480.40	3.800	20.2	7.44	0.799	2.71		1.78 DO
	1553		480.45		20.2	7.47	0.808	4.17		on 1.92 DO ~~off~~ on
	1604			4.055						off
	1612									on
	1622		480.50	4,310	20.2	7.46	0.806	2.50		off
	1633		~~480.52~~							on
	1643		480.52	4,565	20.2	7.45	0.811	3.66		off
	1705	0	476.45							Pump test
	1706	25.5	480.2							
	1710		480.4							
	1715		480.55							
	1720		480.70							
	1725		480.75							
	1730		480.8							
	1735		480.85	5,330						
4/18/17	0727		476.6	5,330	NR					Morning static
	0740									Pump on
	0742	25.5	480.45	5.381	19.9	7.60	0.731	12.4		DO 1.28
	0755	NR	NR	5,712.5	NR					off - surge
	0757	0	475.85		NR					▽ level
	0806	25.5	NR	5,712.5	NR					on
	0815	25.5	480.8		20.0	7.40	0.827	3.20		DO 1.41
	0818	25.5		6,018.5						Pump off - surge
	0819	0	475.2	6,018.5	NR					▽ level mound

Groundwater Extraction Well Development

Pumping

KAFB 106EX2

Date	Time	Rate (gpm)	Depth to Water (ft BGS)	Volume Removed (gallons)	Temp (°C)	pH	EC (mS/cm)	Turbidity (NTU)	Specific Capacity (gpm/ft)	Comments
4/18/17	0828	25.5		6,018.5	NR					Pump on
	0837	25.5	480.9		20.1	7.37	0.825	2.47	6	
	0839		NR	6,273.5	NR					off
	0841	Ø	475.3	6,273.5	NR					▽ level mound
	0849	25.5		↓	NR					Pump on
	0858	25.5	480.9		20.1	7.36	0.826	4.10	6	DO 1.86 ORP -3.7
	0900		NR	6,528.5	NR					off
	0902	Ø	474.9	↓						▽ level mound
	0916	25.5		6,788.5	NR					on
	0925	25.5	480.9		20.1	7.41	0.825	2.52	6	DO 1.66
	0926			6,784	NR					off
	0928	Ø	475.25	6,784	NR					▽ level mound
0938	~~0937~~	25.5		6,784	NR					Pump on
	0948	25.5	481	7,039	20.2	7.45	0.825	2.08	5.8	
	0949	Ø								
	0951	Ø	475.25	7,039	NR					~~▽ level mound~~ off
	1000	25.5	NR	7,039	NR					▽ level mound
	1009	↓	481		20.2	7.38	0.824	2.06	5.8	Pump on
	1010	↓		7,293.5	NR					DO 1.65
	1012	Ø	475.3	7,293.5	NR					Pump off
	1021	25.5		7,293.5	NR					▽ level mound
	1029	25.5			20.2	7.37	0.823	2.07		Pump on
	1031	25.5	481.1	7,548	NR					DO 1.67
	1033	Ø	475.3	7,548	NR					Pump off
	1256	20.5	NR		20.1	7.41	0.825	3.09		▽ level mound
	1320	↓	NR		20.2	7.39	0.824	2.76		Pump test
	1426	↓	NR		20.2	7.38	0.824	1.89		
	1700	20.5	480.9		20.2	7.39	0.825	1.17		

Constant Rate Test
Water Levels

Date 4/18/17
Personnel Crystal Haralee & Chris Scott

Project Number 500433
Well ID KAFB106EX2
Start Time 1248 @ 20GPM
Stickup Length 16"

Static Water Level (feet BTOC) 476.65
Pump Depth (feet BTOC) 497
Gallons per Minute 20 to 20.5

Date/Time 4/18/17	Time Elapsed (minutes)	Water Level (feet BTOC)	Difference from Previous Reading (feet)	Drawdown (feet)	Gallons Purged 7,548 pumping 130 bailing 7,678 total	Comments
1248	0	476.65	Static BTOC		7,678	starting pump wide open ~25.5 then back off to 20
1245	2	480.40				
1248	0	~~480.40~~			~7,803	~20 GPM @ 1248
1250	8	480.1	3.45	3.45	7,843	
1255	13	480.2	.1	3.55	7,943	
1300	18	480.25	.05	3.6	8,043	
1305	23	480.28	.03	3.63	8,143	
1310	28	480.3	.02	3.65	8,243	
1315	33	480.32	.02	3.67	8,343	
1325	43	480.37	.05	3.72	8,543	
1335	53	480.39	.02	3.74	8,798	~20.5 GPM
1345	63	480.45	.06	3.8	9,053	
1355	73	480.5	.05	3.85	9,308	
1405	83	480.52	.02	3.87	9,563	
1415	93	480.55	.03	3.9	9,818	
1430	108	480.6	.05	3.95	10,200.5	10,125.5
1445	123	480.65	.05	4	10,433	
1600	138	480.7	.05	4.05	10,740.5	
1615	153	480.71	.01	4.06	11,048	
1630	168	480.74	.03	4.09	11,355	
1645	183	480.76	.02	4.11		
1600	198	480.79	.03	4.14		
1615	213	480.83	.04	4.18		
1630	228	480.85	.02	4.2		
1645	243	480.87	.02	4.22	12,585	
1700	258	480.9	.02	4.25	12,895	
1702						Pump off, begin recovery
1703		475.15				
1708		476.8				
1714		476.9				

Dial into 20GPM

start

5 min

10 min

15 min

Recovery

15,750

Constant Rate Test
Water Levels

Page 2 of 2

Date 4/18/17

Personnel Chris Scott & Crystal Hardee

Project Number 500433

Well ID KAFB06MW25 - obswell

Static Water Level (feet BTOC) ~~476.~~ 475.9

Start Time

Pump Depth (feet BTOC) — N/A

Stickup Length

Gallons per Minute N/A

Observation Well

Date/Time 4/18/17	Time Elapsed (minutes)	Water Level (feet BTOC)	Difference from Previous Reading (feet)	Drawdown (feet)	Gallons Purged	Comments
12:45	0	475.90				STATIC T.O.C.
12:48	Ø	475.90	0	0	0	START PUMPING
12:58	10	475.90	0	0	0	STEADY Beep
1:08	20	475.90	0	0	0	STEADY Beep
1:18	30	475.90	0	0	0	STEADY Beep
1:30	42	475.90	0	0	0	STEADY Beep/CLEANED PROBE
1:45	57	475.90	0	0	0	INTERMITTENT Beep
2:00	72	475.90	0	0	0	" "
2:15	87	475.90	0	0	0	NO INFLUENCE
2:30	102	475.90	0	0	0	" "
2:45	117	475.90	0	0	0	" "
3:15	147	475.90	0	0	0	" "
3:45	170	475.90	0	0	0	NO INFLUENCE
4:00	185	475.90	0	0	0	" "
4:15	200	475.90	0	0	0	NO INFLUENCE
4:30	215					

Injection Well Completion Diagram KAFB-106IN1

Installation Start Date/Time: 3/16/17@0820
Installation End Date/Time: 3/20/17@1500
Completion Date: 4/19/17

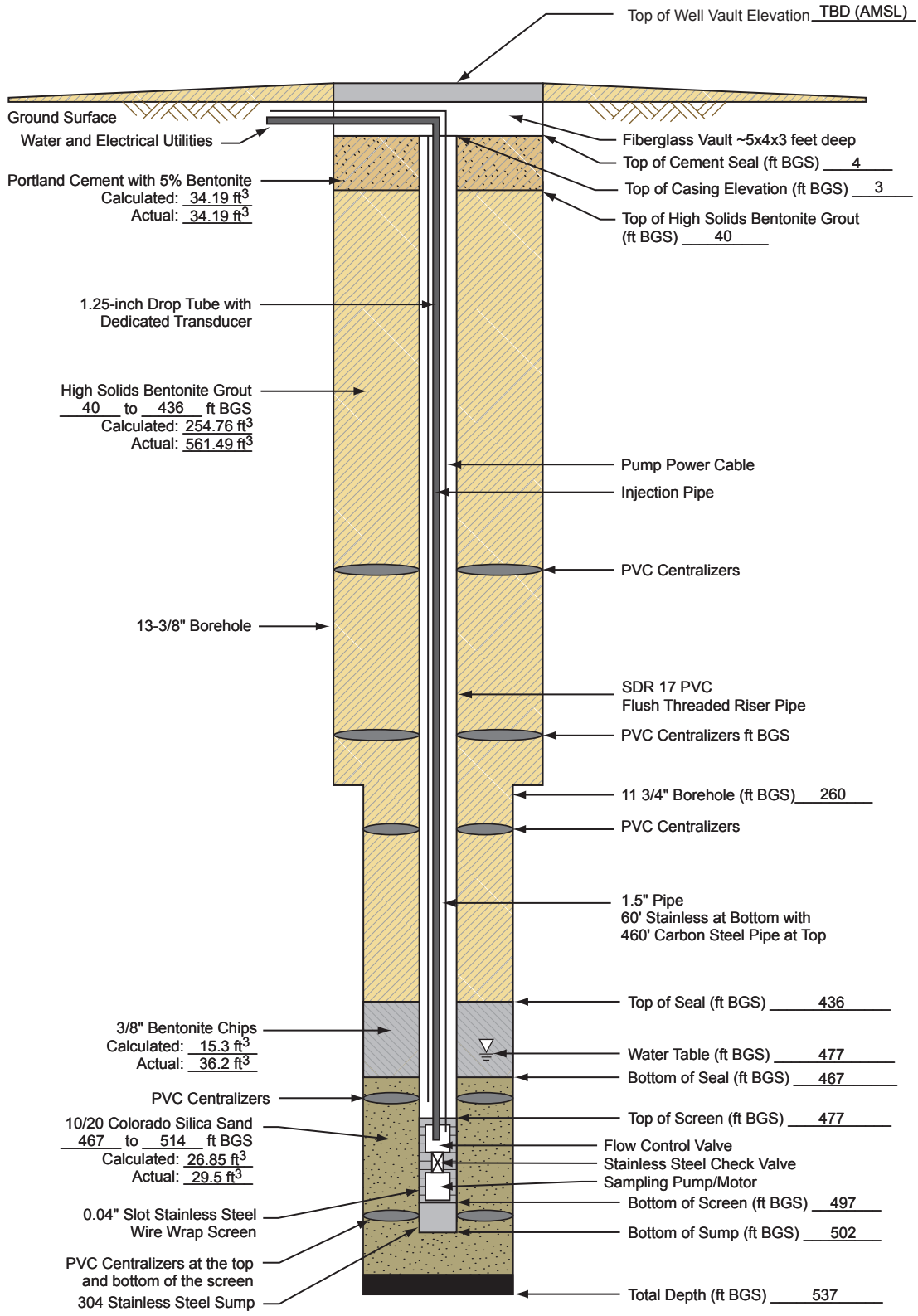

(4,816.90) = *Elevations are NAVD 88 Datum values based on NGS Control Station "Hanger", Elevation = 5,343.43 ft. GPS/RTK methods and GEO1D99 model were used to determine elevations of all surveyed points.*

Not to Scale
BGS = Below Ground Surface

500433_03050100_A8

Borehole ID: KAFB-106IN1

Client: US Army Corps of Engineers
Project Location: KAFB, Albuquerque, NM
Project Name: KAFB RAPID SWMU ST-106/SS-111
Project Number: 500433

Date Started: 3/16/2017
Date TD Reached: 3/20/2017
Date Completed: 4/19/2017

Ground Elevation AMSL (ft): Not Recorded
Y Coordinate:
X Coordinate:

Hole Diameter Upper (in.): 13-3/8
Hole Diameter Lower (in.): 11-3/4
Surface Completion Type: Vault

Groundwater Levels BGS (ft):
At Time of Drilling: 477.00
At End of Drilling: Not Recorded
After Drilling: 476.60

Drillling Contractor: Cascade Drilling
Drilling Method: Air Rotary Casing Hammer
Logged By: T. Richards

Depth (ft)	Sample Type	Number	Headspace PID	Lithologic Log	Material Description	U.S.C.S.	Well Diagram	Remarks
0					SILT with Gravel (ML); based on water knife.		Vault; Top of Casing; Top of Portland Cement with Bentonite	Borehole was pot holed with air knife to 5 feet bgs. No cuttings returned.
5					SILT with Gravel (ML); yellowish red (5YR 5/6); dry; 80% silt; 20% fine gravel to 1/2"; subangular to rounded; trace coarse sand. Note: gravel is mafics and granitic minerals; fragmented by downhole hammer.			Begin drilling with 13-3/8" drive casing @ 0820 on 3/16/17. Driller is using underreamer and stabilizer.
10					Same as above (5 ft).			Hammering downhole only. No water added downhole.
15					Same as above (5 ft); gravel to 1".	ML	Portland Cement with Bentonite	Kelly down @ 0839, new 20' connection @ 0855.
20					Gravelly SILT (ML); light reddish brown (5YR 6/4); dry; 60% silt; 30% fine to coarse gravel; subangular to rounded; 10% coarse sand. Note: gravel is mafics and granitic minerals.			PID = 0.1 ppm @ breathing zone (BZ) and cyclone.
25					Sandy SILT (ML); yellowish red (5YR 4/6); dry; 70% silt; trace clay; 30% fine to coarse sand; trace fine gravel to 1/8".			Hammering downhole. No water added downhole.
30								

BOREHOLE_LOG - CB&I_DRILLING.GDT - 5/9/17 16:14 - Z:\KAFB RAPID\GINT\KAFB_RAPID_11-1-2016.GPJ

Borehole ID: KAFB-106IN1

Client: US Army Corps of Engineers
Project Location: KAFB, Albuquerque, NM
Project Name: KAFB RAPID SWMU ST-106/SS-111
Project Number: 500433

Date Started: 3/16/2017
Date TD Reached: 3/20/2017
Date Completed: 4/19/2017

Ground Elevation AMSL (ft): Not Recorded
Y Coordinate:
X Coordinate:

Hole Diameter Upper (in.): 13-3/8
Hole Diameter Lower (in.): 11-3/4
Surface Completion Type: Vault

Groundwater Levels BGS (ft):
At Time of Drilling: 477.00
At End of Drilling: Not Recorded
After Drilling: 476.60

Drillling Contractor: Cascade Drilling
Drilling Method: Air Rotary Casing Hammer
Logged By: T. Richards

Depth (ft)	Sample Type	Number	Headspace PID	Lithologic Log	Material Description	U.S.C.S.	Well Diagram	Remarks
30					Sandy SILT (ML); yellowish red (5YR 4/6); dry; 70% silt; trace clay; 30% fine to coarse sand; trace fine gravel to 1/8".	ML		Hammering downhole. No water added downhole.
35					Fat CLAY (CL); strong brown (7.5YR 5/8); medium plasticity; 100% clay; trace fine sand.	CH	Portland Cement with Bentonite	
40					Gravelly SILT (ML); light reddish brown (5YR 6/4); dry; 60% silt; trace clay; 40% fine gravel to 3/4"; angular to subrounded; trace fine sand.	ML		Kelly down @ 0925, new 20' connection @ 0937.
					Same as above (35 ft).		Top of High Solids Bentonite Grout	PID = 0.2 ppm @ BZ and 0.4 ppm @ cyclone.
45					Sandy lean CLAY (CL); light brown (7.5YR 6/3); nonplastic; 70% clay; 30% fine sand; trace fine gravel to 1/8".	CL		
50					Gravelly lean CLAY (CL); reddish brown (5YR 5/4); dry; 60% fines; 30% fine gravel to 1/2"; subrounded to rounded; 10% fine sand. Note: majority of the fines observed in cuttings were clay.			Hammering downhole. No water added downhole.
55					Same as above (46 ft).			
60								Kelly down @ 1015, new 20' connection @ 1355.

BOREHOLE_LOG - CB&I_DRILLING.GDT - 5/9/17 16:14 - Z:\KAFB RAPID\GINT\KAFB_RAPID_11-1-2016.GPJ

Borehole ID: KAFB-106IN1

Client: US Army Corps of Engineers
Project Location: KAFB, Albuquerque, NM
Project Name: KAFB RAPID SWMU ST-106/SS-111
Project Number: 500433

Date Started: 3/16/2017
Date TD Reached: 3/20/2017
Date Completed: 4/19/2017

Ground Elevation AMSL (ft): Not Recorded
Y Coordinate:
X Coordinate:

Hole Diameter Upper (in.): 13-3/8
Hole Diameter Lower (in.): 11-3/4
Surface Completion Type: Vault

Groundwater Levels BGS (ft):
At Time of Drilling: 477.00
At End of Drilling: Not Recorded
After Drilling: 476.60

Drillling Contractor: Cascade Drilling
Drilling Method: Air Rotary Casing Hammer
Logged By: T. Richards

Depth (ft)	Sample Type	Number	Headspace PID	Lithologic Log	Material Description	U.S.C.S.	Well Diagram	Remarks
60					Gravelly lean CLAY (CL); reddish brown (5YR 5/4); dry; 60% fines; 30% fine gravel to 1/2"; subrounded to rounded; 10% fine sand. Note: majority of the fines observed in cuttings were clay.			PID = 0.1 ppm @ BZ and cyclone.
65					@ 61 ft: Sandy lean CLAY with Gravel (CL); reddish yellow (7.5YR 4/6); dry; 70% fines; 15% fine to coarse sand; 15% fine gravel to 1/8". Note: majority of the fines observed in cuttings were clay.			Hammering downhole. No water added downhole.
70					Same as above (61 ft).			
75					Same as above (61 ft).	CL	High Solids Bentonite Grout	Begin hammering with casing hammer. Kelly down @ 1424, new 20' connection @ 1439.
80								PID = 0.1 ppm @ BZ and 0.3 ppm @ cyclone.
85					Sandy lean CLAY (CL); yellowish red (5YR 5/6); dry; medium plasticity; 70% clay; 25% fine to medium sand; 5% gravel fragments.			Hammering downhole and with casing hammer. No water added downhole.
90								

BOREHOLE_LOG - CB&I_DRILLING.GDT - 5/9/17 16:14 - Z:\KAFB RAPID\GINT\KAFB_RAPID_11-1-2016.GPJ

Borehole ID: KAFB-106IN1

Client: US Army Corps of Engineers
Project Location: KAFB, Albuquerque, NM
Project Name: KAFB RAPID SWMU ST-106/SS-111
Project Number: 500433

Date Started: 3/16/2017
Date TD Reached: 3/20/2017
Date Completed: 4/19/2017

Ground Elevation AMSL (ft): Not Recorded
Y Coordinate:
X Coordinate:

Hole Diameter Upper (in.): 13-3/8
Hole Diameter Lower (in.): 11-3/4
Surface Completion Type: Vault

Groundwater Levels BGS (ft):
At Time of Drilling: 477.00
At End of Drilling: Not Recorded
After Drilling: 476.60

Drillling Contractor: Cascade Drilling
Drilling Method: Air Rotary Casing Hammer
Logged By: T. Richards

Depth (ft)	Sample Type	Number	Headspace PID	Lithologic Log	Material Description	U.S.C.S.	Well Diagram	Remarks
90					Sandy lean CLAY (CL); yellowish red (5YR 5/6); dry; medium plasticity; 70% clay; 25% fine to medium sand; 5% gravel fragments. Color change to gray from 93 - 95 ft.	CL		Hammering downhole and with casing hammer. No water added downhole.
95								
					Poorly graded SAND (SP); brown (7.5YR 5/4); dry; 90% fine sand; 10% silt.	SP		Kelly down @ 1520, new 20' connection @ 1530.
100								PID = 0.2 ppm @ BZ and cyclone.
					Same as above (97 ft); trace coarse sand.		High Solids Bentonite Grout	
105								Hammering downhole and with casing hammer.
					Same as above (97 ft).			
110								
					Silty SAND with Gravel (SM); pink (5Y 7/4); dry; 40% fine to coarse sand; 20% gravel fragments; angular; 40% silt.	SM		No water added downhole.
115					Same as above (110 ft).			Kelly down @ 1553, new 20' connection @ 1640.
120					Description on following page.	CL		

BOREHOLE_LOG - CB&I_DRILLING.GDT - 5/9/17 16:14 - Z:\KAFB RAPID\GINT\KAFB_RAPID_11-1-2016.GPJ

Borehole ID: KAFB-106IN1

Client: US Army Corps of Engineers
Project Location: KAFB, Albuquerque, NM
Project Name: KAFB RAPID SWMU ST-106/SS-111
Project Number: 500433

Date Started: 3/16/2017
Date TD Reached: 3/20/2017
Date Completed: 4/19/2017

Ground Elevation AMSL (ft): Not Recorded
Y Coordinate:
X Coordinate:

Hole Diameter Upper (in.): 13-3/8
Hole Diameter Lower (in.): 11-3/4
Surface Completion Type: Vault

Groundwater Levels BGS (ft):
At Time of Drilling: 477.00
At End of Drilling: Not Recorded
After Drilling: 476.60

Drillling Contractor: Cascade Drilling
Drilling Method: Air Rotary Casing Hammer
Logged By: T. Richards

Depth (ft)	Sample Type	Number	Headspace PID	Lithologic Log	Material Description	U.S.C.S.	Well Diagram	Remarks
120					Lean CLAY with Sand (CL); light reddish brown (5YR 6/8); dry to slightly moist; 80% clay; 20% fine sand; trace medium and coarse sand.	CL		PID = 0.1 ppm @ BZ and 0.2 ppm @ cyclone. Hammering downhole and with casing hammer.
125					Same as above (120 ft).			
130								
135					Well-graded SAND with Gravel (SW); reddish gray (5YR 5/2); dry; 80% fine to coarse sand; 20% fine gravel to 1/4"; subrounded to rounded.	SW	High Solids Bentonite Grout	No water added downhole.
140					Same as above (132 ft).			Kelly down @ 1710. End of 3/16/17. Resume drilling @ 0745 on 3/17/17.
145					Sandy lean CLAY (CL); reddish yellow (5YR 6/8); dry to slightly moist; low plasticity; 60% clay; 40% fine sand; trace gravel fragments.	CL		PID = 0.1 ppm @ BZ and 0.2 ppm @ cyclone.
150					Same as above (142 ft).			Hammering downhole and with casing hammer. No water added downhole.

BOREHOLE_LOG - CB&I_DRILLING.GDT - 5/9/17 16:14 - Z:\KAFB RAPID\GINT\KAFB_RAPID_11-1-2016.GPJ

Borehole ID: KAFB-106IN1

Client: US Army Corps of Engineers
Project Location: KAFB, Albuquerque, NM
Project Name: KAFB RAPID SWMU ST-106/SS-111
Project Number: 500433

Date Started: 3/16/2017
Date TD Reached: 3/20/2017
Date Completed: 4/19/2017

Ground Elevation AMSL (ft): Not Recorded
Y Coordinate:
X Coordinate:

Hole Diameter Upper (in.): 13-3/8
Hole Diameter Lower (in.): 11-3/4
Surface Completion Type: Vault

Groundwater Levels BGS (ft):
At Time of Drilling: 477.00
At End of Drilling: Not Recorded
After Drilling: 476.60

Drillling Contractor: Cascade Drilling
Drilling Method: Air Rotary Casing Hammer
Logged By: T. Richards

Depth (ft)	Sample Type	Number	Headspace PID	Lithologic Log	Material Description	U.S.C.S.	Well Diagram	Remarks
150					Sandy lean CLAY (CL); reddish yellow (5YR 6/8); dry to slightly moist; low plasticity; 60% clay; 40% fine sand; trace gravel fragments.	CL		Hammering. No water added dowhole or at cyclone.
155					Same as above (150 ft).			Kelly down @ 0819, new 20' connection @ 0829.
160					Well-graded SAND (SW); reddish yellow (5YR 6/6); dry; 95% fine to coarse sand; trace gravel fragments; 5% silt.	SW		PID = 0.2 ppm @ BZ and 0.3 ppm @ cyclone.
165					Poorly graded SAND (SP); light brown (7.5YR 6/4); dry; 100% fine sand; trace medium and coarse.	SP	High Solids Bentonite Grout	Hammering downhole and with casing hammer.
170					Same as above (165 ft).			
175					Same as above (165 ft).			Kelly down @ 0907, new 20' connection @ 0927.
180								

BOREHOLE_LOG - CB&I_DRILLING.GDT - 5/9/17 16:14 - Z:\KAFB RAPID\GINT\KAFB_RAPID_11-1-2016.GPJ

Borehole ID: KAFB-106IN1

Client: US Army Corps of Engineers
Project Location: KAFB, Albuquerque, NM
Project Name: KAFB RAPID SWMU ST-106/SS-111
Project Number: 500433

Date Started: 3/16/2017
Date TD Reached: 3/20/2017
Date Completed: 4/19/2017

Ground Elevation AMSL (ft): Not Recorded
Y Coordinate:
X Coordinate:

Hole Diameter Upper (in.): 13-3/8
Hole Diameter Lower (in.): 11-3/4
Surface Completion Type: Vault

Groundwater Levels BGS (ft):
At Time of Drilling: 477.00
At End of Drilling: Not Recorded
After Drilling: 476.60

Drillling Contractor: Cascade Drilling
Drilling Method: Air Rotary Casing Hammer
Logged By: T. Richards

Depth (ft)	Sample Type	Number	Headspace PID	Lithologic Log	Material Description	U.S.C.S.	Well Diagram	Remarks
180					Poorly graded SAND (SP); light brown (7.5YR 6/4); dry; 100% fine sand; trace medium and coarse.	SP		PID = 0.1 ppm @ BZ and cyclone.
185					Well-graded SAND with Gravel (SW); light brown (7.5YR 6/4); 85% fine to coarse sand; 15% fine gravel to 1/4"; subrounded to rounded. Note: gravel is mafics and granitic minerals.	SW		No hammering. Suspend drive casing while moving down.
190					Same as above (185 ft).	SW		No water added downhole.
195					Same as above (185 ft).	SW	High Solids Bentonite Grout	Kelly down @ 0952, new 20' connection.
200						SW		PID = 0.1 ppm @ BZ and cyclone.
205					Poorly graded SAND (SP); light brown (7.5YR 6/3); dry; 100% medium sand; trace coarse sand.	SP		
210					Well-graded SAND with Gravel (SW); light brown (7.5YR 6/4); 80% fine to coarse sand; 20% fine gravel to 1/2"; angular to rounded. Note: gravel is mafics and granitic minerals.	SW		Hammering downhole and with casing hammer. No water added downhole.

BOREHOLE_LOG - CB&I_DRILLING.GDT - 5/9/17 16:14 - Z:\KAFB RAPID\GINT\KAFB_RAPID_11-1-2016.GPJ

Borehole ID: KAFB-106IN1

Client: US Army Corps of Engineers
Project Location: KAFB, Albuquerque, NM
Project Name: KAFB RAPID SWMU ST-106/SS-111
Project Number: 500433

Date Started: 3/16/2017
Date TD Reached: 3/20/2017
Date Completed: 4/19/2017

Ground Elevation AMSL (ft): Not Recorded
Y Coordinate:
X Coordinate:

Hole Diameter Upper (in.): 13-3/8
Hole Diameter Lower (in.): 11-3/4
Surface Completion Type: Vault

Groundwater Levels BGS (ft):
At Time of Drilling: 477.00
At End of Drilling: Not Recorded
After Drilling: 476.60

Drillling Contractor: Cascade Drilling
Drilling Method: Air Rotary Casing Hammer
Logged By: T. Richards

Depth (ft)	Sample Type	Number	Headspace PID	Lithologic Log	Material Description	U.S.C.S.	Well Diagram	Remarks
210					Well-graded SAND with Gravel (SW); light brown (7.5YR 6/4); 80% fine to coarse sand; 20% fine gravel to 1/2"; angular to rounded. Note: gravel is mafics and granitic minerals.			Hammering downhole and with casing hammer.
215					Well-graded SAND (SW); pinkish gray (7.5YR 6/2); dry; 100% fine to coarse sand.	SW		
					Well-graded SAND with Gravel (SW); pinkish gray (7.5YR 6/2); 70% fine to coarse sand; 30% fine gravel to 1/4"; angular to rounded.			Kelly down @ 1026, new 20' connection @ 1034.
220					Lean CLAY with Sand (CL); strong brown (7/5YR 5/6); moist; 80% clay; 20% fine to medium sand.	CL		PID = 0.1 ppm @ BZ and cyclone.
					Well-graded GRAVEL with Sand (GW); dark brown (7.5YR 3/3); 50% fine to coarse gravel to 1-1/4"; angular to rounded; 45% fine to coarse sand; 5% silt. Note: gravel is mafics and granitic minerals.	GW		Driller added approximately 100 gallons of water downhole.
225					Well-graded SAND with Gravel (SW); brown (7.5YR 4/4); 75% fine to coarse sand; 25% fine to coarse gravel to 1"; subangular to rounded; trace silt. Note: gravel is mafics and granitic minerals.		High Solids Bentonite Grout	Hard drilling.
230					Same as above (224 ft).	SW		Hammering.
235					Same as above (224 ft).			Kelly down @ 1138, new 20' connection @ 1245.
240								

BOREHOLE_LOG - CB&I_DRILLING.GDT - 5/9/17 16:14 - Z:\KAFB RAPID\GINT\KAFB_RAPID_11-1-2016.GPJ

Borehole ID: KAFB-106IN1

Client: US Army Corps of Engineers
Project Location: KAFB, Albuquerque, NM
Project Name: KAFB RAPID SWMU ST-106/SS-111
Project Number: 500433

Date Started: 3/16/2017
Date TD Reached: 3/20/2017
Date Completed: 4/19/2017

Ground Elevation AMSL (ft): Not Recorded
Y Coordinate:
X Coordinate:

Hole Diameter Upper (in.): 13-3/8
Hole Diameter Lower (in.): 11-3/4
Surface Completion Type: Vault

Groundwater Levels BGS (ft):
At Time of Drilling: 477.00
At End of Drilling: Not Recorded
After Drilling: 476.60

Drillling Contractor: Cascade Drilling
Drilling Method: Air Rotary Casing Hammer
Logged By: T. Richards

Depth (ft)	Sample Type	Number	Headspace PID	Lithologic Log	Material Description	U.S.C.S.	Well Diagram	Remarks
240					Well-graded SAND with Gravel (SW); brown (7.5YR 4/4); 75% fine to coarse sand; 25% fine to coarse gravel to 1"; subangular to rounded; trace silt. Note: gravel is mafics and granitic minerals.			
245					Same as above (240 ft).	SW		Hammering downhole and with casing hammer. No water added downhole.
250								
					Silty SAND with Gravel (SM); brown (7.5YR 5/4); 60% fine to medium sand; 20% fine gravel to 1/2"; subangular to rounded; 20% silt.	SM		
255							High Solids Bentonite Grout	
					Sandy lean CLAY (CL); yellowish brown (10YR 5/4); low plasticity; 70% clay; 25% fine sand; 5% fine gravel to 1/8"; subrounded to rounded.			Kelly down @ 1305, new 5' connection @ 1333. Trip drill sting to run in with 11-3/4" casing. End of 3/17/17. Resume drilling @ 0835 on 3/18/17. PID = 0.1 ppm @ BZ and cyclone.
260								
265					Same as above (258 ft).	CL		
270								Hammering downhole and intermittently with casing hammer.

BOREHOLE_LOG - CB&I_DRILLING.GDT - 5/9/17 16:14 - Z:\KAFB RAPID\GINT\KAFB_RAPID_11-1-2016.GPJ

Borehole ID: KAFB-106IN1

Client: US Army Corps of Engineers
Project Location: KAFB, Albuquerque, NM
Project Name: KAFB RAPID SWMU ST-106/SS-111
Project Number: 500433

Date Started: 3/16/2017
Date TD Reached: 3/20/2017
Date Completed: 4/19/2017

Ground Elevation AMSL (ft): Not Recorded
Y Coordinate:
X Coordinate:

Hole Diameter Upper (in.): 13-3/8
Hole Diameter Lower (in.): 11-3/4
Surface Completion Type: Vault

Groundwater Levels BGS (ft):
At Time of Drilling: 477.00
At End of Drilling: Not Recorded
After Drilling: 476.60

Drillling Contractor: Cascade Drilling
Drilling Method: Air Rotary Casing Hammer
Logged By: T. Richards

Depth (ft)	Sample Type	Number	Headspace PID	Lithologic Log	Material Description	U.S.C.S.	Well Diagram	Remarks
270					Sandy lean CLAY (CL); yellowish brown (10YR 5/4); low plasticity; 70% clay; 25% fine sand; 5% fine gravel to 1/8"; subrounded to rounded.	CL		PID = 0.0 ppm @ BZ and 0.1 ppm @ cyclone. No water added downhole.
275					No cuttings returned. Cyclone plugged and drill bit is stuck. Cuttings appear to be coarse sand with gravel and clay.			Kelly down @ 0800, new 20' connection @ 0910.
280								PID = 0.1 ppm @ BZ and cyclone.
285					Poorly graded SAND (SP); light brown (7.5YR 6/4); 100% fine sand; trace medium and coarse sand.	SP	High Solids Bentonite Grout	Driller added approximately 100 gallons of water dowhole. Resume drilling @ 1310.
290					Same as above (283 ft).			Hammering downhole.
295					Same as above (283 ft).			Kelly down @ 1328, new 20' connection @ 1341.
300								

BOREHOLE_LOG - CB&I_DRILLING.GDT - 5/9/17 16:14 - Z:\KAFB RAPID\GINT\KAFB_RAPID_11-1-2016.GPJ

Borehole ID: KAFB-106IN1

Client: US Army Corps of Engineers
Project Location: KAFB, Albuquerque, NM
Project Name: KAFB RAPID SWMU ST-106/SS-111
Project Number: 500433

Date Started: 3/16/2017
Date TD Reached: 3/20/2017
Date Completed: 4/19/2017

Ground Elevation AMSL (ft): Not Recorded
Y Coordinate:
X Coordinate:

Hole Diameter Upper (in.): 13-3/8
Hole Diameter Lower (in.): 11-3/4
Surface Completion Type: Vault

Groundwater Levels BGS (ft):
At Time of Drilling: 477.00
At End of Drilling: Not Recorded
After Drilling: 476.60

Drillling Contractor: Cascade Drilling
Drilling Method: Air Rotary Casing Hammer
Logged By: T. Richards

Depth (ft)	Sample Type	Number	Headspace PID	Lithologic Log	Material Description	U.S.C.S.	Well Diagram	Remarks
300					Poorly graded SAND (SP); light brown (7.5YR 6/4); 100% fine sand; trace medium and coarse sand.	SP		PID = 0.0 ppm @ BZ and cyclone.
305					Well-graded SAND with Gravel (SW); brown (7.5YR 6/4); 80% fine to coarse sand; 20% fine to coarse gravel to 1"; subangular to rounded; trace silt.	SW		Hammering downhole. No water added downhole.
310					Same as above (302 ft).			
315					Same as above (302 ft).		High Solids Bentonite Grout	Kelly down @ 1356, new 20' connection @ 1403.
320					Same as above (302 ft).			PID = 0.0 ppm @ BZ and cyclone.
325					Sandy lean CLAY (CL); nonplastic; 60% clay; 20% fine to medium sand; 20% fine gravel to 1/4"; angular to rounded.	CL		
330					Well-graded SAND with Gravel (SW); brown (7.5YR 4/4); 70% fine to coarse sand; 30% fine gravel to 1/4"; subrounded to rounded.	SW		No water added downhole.

BOREHOLE_LOG - CB&I_DRILLING.GDT - 5/9/17 16:14 - Z:\KAFB RAPID\GINT\KAFB_RAPID_11-1-2016.GPJ

Borehole ID: KAFB-106IN1

Client: US Army Corps of Engineers
Project Location: KAFB, Albuquerque, NM
Project Name: KAFB RAPID SWMU ST-106/SS-111
Project Number: 500433

Date Started: 3/16/2017
Date TD Reached: 3/20/2017
Date Completed: 4/19/2017

Ground Elevation AMSL (ft): Not Recorded
Y Coordinate:
X Coordinate:

Hole Diameter Upper (in.): 13-3/8
Hole Diameter Lower (in.): 11-3/4
Surface Completion Type: Vault

Groundwater Levels BGS (ft):
At Time of Drilling: 477.00
At End of Drilling: Not Recorded
After Drilling: 476.60

Drillling Contractor: Cascade Drilling
Drilling Method: Air Rotary Casing Hammer
Logged By: T. Richards

Depth (ft)	Sample Type	Number	Headspace PID	Lithologic Log	Material Description	U.S.C.S.	Well Diagram	Remarks
330					Well-graded SAND with Gravel (SW); brown (7.5YR 4/4); 70% fine to coarse sand; 30% fine gravel to 1/4"; subrounded to rounded.	SW		Hammering downhole and with casing hammer. No water added downhole.
335					Silty SAND with Gravel (SM); brown (7.5YR 4/2); 50% fine to coarse sand; 25% fine gravel to 1/2"; subrounded to rounded; 25% silt. Note: gravel is mafics and granitic minerals.	SM		
340					Well-graded GRAVEL with Silt and Sand (GW-GM); brown (7/5YR 4/2); 50% fine to coarse gravel to 1"; subangular to rounded; 40% fine to coarse sand; 10% silt. Note: sand and gravel are mafics and granitic minerals.	GW-GM		Kelly down @ 1442, new 20' connection @ 1555. PID = 0.0 ppm @ BZ and 0.1 ppm @ cyclone.
345					Well-graded SAND with Gravel (SW); brown (7.5YR 4/2); 70% fine to coarse sand; 25% fine gravel to 1/2"; subangular to rounded; 5% silt. Note: gravel is mafics and granitic minerals.	SW	High Solids Bentonite Grout	
350					Same as above (341 ft).			
355					Poorly graded SAND (SP); brown (7.5YR 5/4); 100% fine sand; trace medium and coarse sand; trace fine gravel to 1/8"; rounded. Note: gravel is granitic minerals.	SP		No water added downhole.
360					Same as above (350 ft).			Kelly down @ 1613, new 20' connection @ 1621.

BOREHOLE_LOG - CB&I_DRILLING.GDT - 5/9/17 16:14 - Z:\KAFB RAPID\GINT\KAFB_RAPID_11-1-2016.GPJ

Borehole ID: KAFB-106IN1

Client: US Army Corps of Engineers
Project Location: KAFB, Albuquerque, NM
Project Name: KAFB RAPID SWMU ST-106/SS-111
Project Number: 500433

Date Started: 3/16/2017
Date TD Reached: 3/20/2017
Date Completed: 4/19/2017

Ground Elevation AMSL (ft): Not Recorded
Y Coordinate:
X Coordinate:

Hole Diameter Upper (in.): 13-3/8
Hole Diameter Lower (in.): 11-3/4
Surface Completion Type: Vault

Groundwater Levels BGS (ft):
At Time of Drilling: 477.00
At End of Drilling: Not Recorded
After Drilling: 476.60

Drillling Contractor: Cascade Drilling
Drilling Method: Air Rotary Casing Hammer
Logged By: T. Richards

Depth (ft)	Sample Type	Number	Headspace PID	Lithologic Log	Material Description	U.S.C.S.	Well Diagram	Remarks
360					Poorly graded SAND (SP); brown (7.5YR 5/4); 100% fine sand; trace medium and coarse sand; trace fine gravel to 1/8"; rounded. Note: gravel is granitic minerals.	SP		PID = 0.0 ppm @ BZ and 0.1 ppm @ cyclone.
365					Well-graded SAND (SW); light brown (7.5YR 6/4); dry; 90% fine to coarse sand; 10% fine gravel to 1/4"; subrounded to rounded. Note: gravel is mafics and granitic minerals.	SW		
370								
375					Silty GRAVEL with Sand (GM); pinkish gray (7.5YR 6/2); dry; 50% fine gravel to 1/2"; 30% fine to coarse sand; 20% silt. Note: gravel is mafics and granitic minerals.	GM	High Solids Bentonite Grout	No water added downhole.
380								Kelly down @ 1656, new 20' connection @ 1704.
385					Well-graded SAND with Gravel (SW); brown (7.5YR 5/4); 80% fine to coarse sand; 20% fine gravel to 1/2"; subrounded to rounded. Note: gravel is mafics and granitic minerals.	SW		PID = 0.1 ppm @ BZ and cyclone.
390					Same as above (380 ft).			No water added downhole.

BOREHOLE_LOG - CB&I_DRILLING.GDT - 5/9/17 16:14 - Z:\KAFB RAPID\GINT\KAFB_RAPID_11-1-2016.GPJ

Borehole ID: KAFB-106IN1

Client: US Army Corps of Engineers
Project Location: KAFB, Albuquerque, NM
Project Name: KAFB RAPID SWMU ST-106/SS-111
Project Number: 500433

Date Started: 3/16/2017
Date TD Reached: 3/20/2017
Date Completed: 4/19/2017

Ground Elevation AMSL (ft): Not Recorded
Y Coordinate:
X Coordinate:

Hole Diameter Upper (in.): 13-3/8
Hole Diameter Lower (in.): 11-3/4
Surface Completion Type: Vault

Groundwater Levels BGS (ft):
At Time of Drilling: 477.00
At End of Drilling: Not Recorded
After Drilling: 476.60

Drillling Contractor: Cascade Drilling
Drilling Method: Air Rotary Casing Hammer
Logged By: T. Richards

Depth (ft)	Sample Type	Number	Headspace PID	Lithologic Log	Material Description	U.S.C.S.	Well Diagram	Remarks
390					Well-graded SAND with Gravel (SW); brown (7.5YR 5/4); 80% fine to coarse sand; 20% fine gravel to 1/2"; subrounded to rounded. Note: gravel is mafics and granitic minerals.	SW		
395					Same as above (390 ft).	SW		No water added downhole.
400					Same as above (390 ft).	SW		Kelly down @ 1730. End of 3/18/17. Resume drilling @ 0810 on 3/19/17. PID = 0.1 ppm @ BZ and cyclone.
405					Poorly graded SAND (SP); pale brown (10YR 6/3); 90% fine sand; trace medium sand; 5% fine gravel to 1/4"; rounded; 5% silt. Note: gravel is mafics and granitic minerals.	SP	High Solids Bentonite Grout	Hammering with casing hammer. No water added downhole.
410					SILT (ML); strong brown (7.5YR 4/6); 90% silt; 5% fine sand; 5% fine gravel to 1/8".	ML		
415					Poorly graded SAND (SP); brown (7.5YR 5/2); 90% fine sand; 5% fine gravel to 1/8"; rounded; 5% silt. Note: gravel is mafics and granitic minerals.	SP		
420					Well-graded SAND (SW); light brown (7.5YR 6/3); dry; 90% fine to coarse sand; 5% fine gravel to 1/4"; 5% silt.	SW		Kelly down @ 0838, new 20' connection @ 0845.

BOREHOLE_LOG - CB&I_DRILLING.GDT - 5/9/17 16:14 - Z:\KAFB RAPID\GINT\KAFB_RAPID_11-1-2016.GPJ

Borehole ID: KAFB-106IN1

Client: US Army Corps of Engineers
Project Location: KAFB, Albuquerque, NM
Project Name: KAFB RAPID SWMU ST-106/SS-111
Project Number: 500433

Date Started: 3/16/2017
Date TD Reached: 3/20/2017
Date Completed: 4/19/2017

Ground Elevation AMSL (ft): Not Recorded
Y Coordinate:
X Coordinate:

Hole Diameter Upper (in.): 13-3/8
Hole Diameter Lower (in.): 11-3/4
Surface Completion Type: Vault

Groundwater Levels BGS (ft):
At Time of Drilling: 477.00
At End of Drilling: Not Recorded
After Drilling: 476.60

Drillling Contractor: Cascade Drilling
Drilling Method: Air Rotary Casing Hammer
Logged By: T. Richards

Depth (ft)	Sample Type	Number	Headspace PID	Lithologic Log	Material Description	U.S.C.S.	Well Diagram	Remarks
420					Well-graded SAND (SW); light brown (7.5YR 6/3); dry; 90% fine to coarse sand; 5% fine gravel to 1/4"; 5% silt.			PID = 0.1 ppm @ BZ and cyclone.
425								
					Same as above (420 ft).			
430								No water added downhole.
					Well-graded SAND with Gravel (SW); light brown (7.5YR 6/4); dry; 80% fine to coarse sand; 20% fine gravel to 1/2"; trace silt.			
435						SW	Top of Bentonite Seal	
					Same as above (432 ft).			Kelly down @ 0914, new 20' connection @ 0925.
440								PID = 0.2 ppm @ BZ and cyclone.
					Same as above (432 ft).			
445								
450								

BOREHOLE_LOG - CB&I_DRILLING.GDT - 5/9/17 16:14 - Z:\KAFB RAPID\GINT\KAFB_RAPID_11-1-2016.GPJ

Borehole ID: KAFB-106IN1

Client: US Army Corps of Engineers
Project Location: KAFB, Albuquerque, NM
Project Name: KAFB RAPID SWMU ST-106/SS-111
Project Number: 500433

Date Started: 3/16/2017
Date TD Reached: 3/20/2017
Date Completed: 4/19/2017

Ground Elevation AMSL (ft): Not Recorded
Y Coordinate:
X Coordinate:

Hole Diameter Upper (in.): 13-3/8
Hole Diameter Lower (in.): 11-3/4
Surface Completion Type: Vault

Groundwater Levels BGS (ft):
At Time of Drilling: 477.00
At End of Drilling: Not Recorded
After Drilling: 476.60

Drillling Contractor: Cascade Drilling
Drilling Method: Air Rotary Casing Hammer
Logged By: T. Richards

Depth (ft)	Sample Type	Number	Headspace PID	Lithologic Log	Material Description	U.S.C.S.	Well Diagram	Remarks
450					Well-graded SAND with Gravel (SW); light brown (7.5YR 6/4); dry; 80% fine to coarse sand; 20% fine gravel to 1/2"; trace silt.	SW		Hammering with casing hammer. No water added downhole.
455					Same as above (450 ft); 70% sand; 30% gravel to 1-1/2".			Kelly down @ 0954, new 20' connection @ 1200.
460					Poorly graded SAND with Silt (SP-SM); yellowish brown (10YR 5/4); dry; 80% fine sand; trace medium sand; 10% fine gravel to 1/4"; rounded; 10% silt. Note: gravel is mafics and quartz.	SP-SM	Bentonite Seal	PID = 0.1 ppm @ BZ and 0.7 ppm @ cyclone. Slight fuel odor.
465			4.5		Same as above (458 ft).		Top of 10/20 Sand	PID = 0.1 ppm @ BZ and 7.5 ppm @ cyclone. Hammering with casing hammer.
470			4.3		Same as above (458 ft).			PID = 0.1 ppm @ BZ and 4.1 ppm @ cyclone.
475			5.8		Same as above (458 ft).			PID = 0.3 ppm @ BZ and 10.2 ppm @ cyclone.
480					Well-graded SAND with Gravel (SW); dark yellowish brown (10YR 4/4); wet; 75% fine to coarse sand; 25% fine gravel to 1"; subangular to rounded.	SW	Top of Stainless Steel 0.040 Slot Screen	Top of groundwater @ 477 feet bgs. Kelly down @ 1252, new 20' connection @ 1300.

BOREHOLE_LOG - CB&I_DRILLING.GDT - 5/9/17 16:14 - Z:\KAFB RAPID\GINT\KAFB_RAPID_11-1-2016.GPJ

Borehole ID: KAFB-106IN1

Client: US Army Corps of Engineers
Project Location: KAFB, Albuquerque, NM
Project Name: KAFB RAPID SWMU ST-106/SS-111
Project Number: 500433

Date Started: 3/16/2017
Date TD Reached: 3/20/2017
Date Completed: 4/19/2017

Ground Elevation AMSL (ft): Not Recorded
Y Coordinate:
X Coordinate:

Hole Diameter Upper (in.): 13-3/8
Hole Diameter Lower (in.): 11-3/4
Surface Completion Type: Vault

Groundwater Levels BGS (ft):
At Time of Drilling: 477.00
At End of Drilling: Not Recorded
After Drilling: 476.60

Drillling Contractor: Cascade Drilling
Drilling Method: Air Rotary Casing Hammer
Logged By: T. Richards

Depth (ft)	Sample Type	Number	Headspace PID	Lithologic Log	Material Description	U.S.C.S.	Well Diagram	Remarks
480			12.5		Well-graded SAND with Gravel (SW); dark yellowish brown (10YR 4/4); wet; 75% fine to coarse sand; 25% fine gravel to 1"; subangular to rounded. Note: gravel is mafics and quartz.			PID = 0.2 ppm @ BZ and 11.5 ppm @ cyclone. Hammering. No water added downhole.
485			23.7		Same as above (480 ft).			PID = 0.2 ppm @ BZ and 18.9 ppm @ cyclone.
490			342.3		Same as above (480 ft).		Stainless Steel 0.040 Slot Screen	PID = 1.8 ppm @ BZ and 1,721 ppm @ cyclone.
495			365.7		Same as above (480 ft).	SW	Bottom of Screen	PID = 4.6 ppm @ BZ and 518.6 ppm @ cyclone. Kelly down @ 1344, new 20' connection.
500			95.7		Same as above (480 ft).		Stainless Steel Sump Bottom of Sump	PID = 6.2 ppm @ BZ and 460.8 ppm @ cyclone.
505			96.3		Same as above (480 ft).			Hammering downhole and with casing hammer. No water added downhole. PID = 5.2 ppm @ BZ and 61.9 ppm @ cyclone.
510								

BOREHOLE_LOG - CB&I_DRILLING.GDT - 5/9/17 16:14 - Z:\KAFB RAPID\GINT\KAFB_RAPID_11-1-2016.GPJ

Borehole ID: KAFB-106IN1

Client: US Army Corps of Engineers
Project Location: KAFB, Albuquerque, NM
Project Name: KAFB RAPID SWMU ST-106/SS-111
Project Number: 500433

Date Started: 3/16/2017
Date TD Reached: 3/20/2017
Date Completed: 4/19/2017

Ground Elevation AMSL (ft): Not Recorded
Y Coordinate:
X Coordinate:

Hole Diameter Upper (in.): 13-3/8
Hole Diameter Lower (in.): 11-3/4
Surface Completion Type: Vault

Groundwater Levels BGS (ft):
At Time of Drilling: 477.00
At End of Drilling: Not Recorded
After Drilling: 476.60

Drillling Contractor: Cascade Drilling
Drilling Method: Air Rotary Casing Hammer
Logged By: T. Richards

Depth (ft)	Sample Type	Number	Headspace PID	Lithologic Log	Material Description	U.S.C.S.	Well Diagram	Remarks
510			43.7		Well-graded SAND with Gravel (SW); dark yellowish brown (10YR 4/4); wet; 75% fine to coarse sand; 25% fine gravel to 1"; subangular to rounded. Note: gravel is mafics and quartz.	SW		PID = 6.0 ppm @ BZ and 54.3 ppm @ cyclone.
515			20.1		Same as above (510 ft).		Bottom of 10/20 Filter Pack	PID = 1.7 ppm @ BZ and 16.8 ppm @ cyclone.
520			2.7		Same as above (510 ft).			Kelly down @ 1415. Added approximately 1,000 gallons of water downhole. End of 3/19/17. Resume drilling @ 1415 on 3/20/17. PID = 0.1 ppm @ BZ and 0.2 ppm @ cyclone.
525			0.7		Same as above (510 ft).		Native Backfill	PID = 0.0 ppm @ BZ and 0.1 ppm @ cyclone.
530			0.7		Same as above (510 ft).			PID = 0.1 ppm @ BZ and 0.3 ppm @ cyclone.
535			0.2					PID = 0.1 ppm @ BZ and cyclone.
540							Bottom of Rat Hole	Kelly down @ 1500. Total depth = 537 feet bgs. Reached total depth on 3/20/17. Added approximately 1,000 gallons of water downhole.

BOREHOLE_LOG - CB&I_DRILLING.GDT - 5/9/17 16:14 - Z:\KAFB RAPID\GINT\KAFB_RAPID_11-1-2016.GPJ

1 of 80

Groundwater Extraction Well Development

Crystal Hardee

Bailing KAFB 106IN1

Date	Time	Total Volume Bailed (gallons)	Imhoff Cone Measurement (mL sediment per L water)	Comments
4/10	0756		35	
	0804		40	
	0811	10	10	
	0815		20	
	0818		20	
	0823	20	3.5	
	0835		8	
	0843		1.5	
	0849		1	
	0852	46	1	Switch to swab
	0915	40	–	start swabbing
	0942	40	-	begin bailing well again
	0946		-	lost most of sand from bailer
	0953		-	- x3 bailer up empty or close to it
	0956		~~30~~ 30	- successful trip
	0958		-	empty - switching bailers
	1006		4	New bailer working great
	1009		3	
	1012	50	5	stopping to pump off Drum
	1049	70	1.5	- switching to swab
	1135		50	bailing
	1139		40	
	1142		25	
	1146		15	
	1218		30	
	1150		20	
	1154	80	1	
	1206		2	
	1205	95	1	~~Bailing/swabbing complete~~
	1245	97	1	Bailing/swabbing complete

Groundwater Extraction Well Development

Intake @ 492' bgs

Pumping KAFB-106IN-1 Crystal Hardee

Date	Time	Rate (gpm)	Depth to Water (ft BGS)	Volume Removed (gallons)	Temp (°C)	pH	EC (mS/cm)	Turbidity (NTU)	Specific Capacity (gpm/ft)	Comments DO / Comments
4/10	1536	25.5	477.75	~ Ø	19.9		0.507	>1000		~~10.9~~ 1.40
	1556	25.5	483.2	510	20.1		0.558	22.1		
	1600		476.8							surge - pump off
	1615									Pump on
	1619	25.5	483.2	862	20.1	7	0.571	16.8		2.68
	1631		476.7	1,168						Pump off
	1639									Pump on
	1650	25.5	483.85	1,678						~~off surge~~
	1700			1,933						off for day
4/11	0720	Ø	477.85	1,933	NR					static - pre pump
	0729	25.5								Pump on
	0733	25.5	483.5	2,035	19.9	7.65	0.589	7.8 ~~339~~		2.93
	0747	25.5	484.5	2,392	20.0	8.18	0.590	14.1		3.39
	0749			2,443						off - surge
	0755	Ø	477.5	2,443	NR					
	0759									on
	0806	25.5	484.4	2,596	20.1		0.595	8.61		3.31
	0809									off
	0819	Ø	478.0	2,596	NR					
	0821									on
	0825	25.5	485.6	2,698	20.1	±9.00	0.594	7.95		3.82
	0834			2,927.5						off
	0836	Ø	476.3		NR					
	0844	25.5								on
	0845		484.1							
	0849	25.5	485.1	3,055	20.0	±9.00	0.603	9.97	3.5	3.68
	0856									off
	0858		476.1							
	0908									on
	0913	25.5	484.9	3,182.5	20.1	7.87	0.603	10.2		3.95
	0918			3,310						off
	0921	Ø	476.05	3,310	NR					
	0928	25.5		3,310	NR					on
	0931		484.8	3,335.5	NR					
	0935	25.5	485.3	3,437.5	20.1	7	0.603	9.19		3.52
	0940			3,565						off
	0942	Ø	476.2	3,565	NR					
										on

Groundwater Extraction Well Development

Pumping KAFB 10GIN-1

Date	Time	Rate (gpm)	Depth to Water (ft BGS)	Volume Removed (gallons)	Temp (°C)	pH	EC (mS/cm)	Turbidity (NTU)	Specific Capacity (gpm/ft)	Comments
4/11	1008	- Pump off - letting Recover for test								Mini Pump test
	1040	Ø	478.0	3565						
	1100	25.5	477.95	3565						Pumping
	1101	25.5	484.4	3590.5						
	1102	25.5	484.6	3616						
	1103	25.5	484.85	3641.5						
	1104	25.5	485	3667						
	1105	25.5	485.2	3692.5						
	1110	25.5	485.8	3820						
	1115	25.5	486	3947.5	20.1	20.1	0.604	4.94		4.01
	1120	25.5	486.25	4075						
	1125	25.5	486.45	4202.5						3.69
	1130	25.5	486.6	~~4253.4~~	330	20.1	~~0.604~~	4.94		
	1140	25.5	488.95	4585						
	1150	25.5	487.3	4840						
	1200	25.5	487.6	5095						Pump off
	1249									Pump on surge cycle
	1255	25.5	486.7	5248	20.2	±7.00	0.615	10.5	2.9	1300 Pump off
	1302	Ø	475.85	5248	NR					Recovery / mound
	1300									Pump on
	1316	25.5	486.8	5401	20.2	7	0.614	10.0		3.71
	1320			5503						off
	1321	Ø	475.9	5503	NR					Recovery / mound
	1334	25.5		5503	NR					on
	1339	25.5	486.95	5630.5	20.2		0.614	21.0		3.89
	1344									off
	1346	Ø	475.8	5758	NR					Recovery / mound
	1356	25.5								on
	1359	25.5	486.4	5,885.5	20.3	±9.00	0.612	13.5		Pump on
	1406			6,013						off
	1408	Ø	475.8							Recovery / mound
	1500	Ø	477.96							
	1513	25.5	484.8	6,013						Pump test
	1514	25.5	485.95	6,038.5						
	1515	25.5	486	6,064						
	1516		486.05	6,089.5						
	1517		486.50	6,115						
	1518		486.85	6,140.5						

Groundwater Extraction Well Development

Pumping

KAFB-106JN-1

Date	Time	Rate (gpm)	Depth to Water (ft BGS)	Volume Removed (gallons)	Temp (°C)	pH	EC (mS/cm)	Turbidity (NTU)	Specific Capacity (gpm/ft)	Comments
4/11	1523	25.5	487.40	6,268						Pump test
	1528	25.5	487.65	6,293.5						
	1533	25.5	487.82	6,319						
	1537	25.5	488	6,370						
	1543	25.5	488.1	6,497.5						Pump off
	549	Ø	477.81	6,497.5						
	1550									Pump on
	1551	25.5								water
	1559	25.5	487.7	6,701.5	20.1	±7.00	0.620	7.76		
	1601			6,752.5						off
	1611	-	-	6,752.5	NR					on.
	1615	25.5	487.3	6,854.5	20.2		0.615	10.3		
	1622	Ø		7,130						off
	1630	Ø	477.85	7,130	NR					
	1630	25.5								on
	1633	25.5	486.15	7,155.5	20.5		0.604	14.4		
	1646			7,487						off
	1654	Ø								on
	1656	25.5	486.9	7538	20.1	±7.00	~~0.60~~ 0.602	16.0		
	1704	Ø								off
	1705	Ø	475.75	7538	NR	NR	NR	NR		- Done surging today
4/12	0709	Ø	477.75	7538	NR					static
	~~0715~~	on +	Pumping							Pump test
	~~0716~~									Trigger stroke
	0717	25.5	486.1	7614.5					3	
	0718	25.5	486.4	7640					2.9	
	0719	25.5	486.75	7665.5	20.0	±7	0.6260	13.0	2.8	
	0720		487.10	7798					2.7	
	0725		487.91	7,920.5					2.5	
	0730		488.33	8,048					2.4	
	0735		488.35	8,175.5					2.4	
	0740		488.50	8,303	20.0	±7	0.624	11.8	2.3	
	0745		488.70	8,430.5					2.3	
	0750		488.82	8,558	20.0	±7	0.623	9.1	2.3	
4/12	0755	Ø	477.65	8,558	NR					
	0800		477.9		NR					
	0805		477.9		NR					
	0810		477.85		NR					

pump

recover of

Constant Rate Test
Water Levels

Date 4/22/17
Personnel Crystal

Project Number 500433
Well ID 106IN1
Start Time 4:25
Stickup Length 16 in

Static Water Level (feet BTOC) 477.65
Pump Depth (feet BTOC) 492
Gallons per Minute ~ 20.04

Intake @~492

Date/Time 4/22	Time Elapsed (minutes)	Water Level (feet BTOC)	Difference from Previous Reading (feet)	Drawdown (feet)	Gallons Purged	Comments
4:25	0	477.65				Started @ 28 GPM
4:27	2	483.75		6.2	56	
4:28	3	483.58		6.03	76	
4:33	10	483.95	.37	6.4	176	
4:35	12	484.1	.15	6.55	216	20 GPM
4:40	17	484.55	.45	7	316	
4:45	22	484.65	.10	7.1	416	
4:50	27	484.85	.2	7.3	516	
4:55	32	485.00	.15	7.48	616	
5:00	37	485.15	.15	7.6	716	
5:05	42	485.3	.15	7.75	816	
5:10	47	485.4	.1	7.85	1,016	
5:20	57	485.56	.16	8.01	1,216	
5:30	67	485.7	.14	8.15	1,416	
5:40	77	485.8	.1	8.25	1,616	
5:50	87	485.9	.1	8.35	1,816	
6:00	97	486	.1	8.45	2,016	
6:10	107	486.1	.1	8.55	2,216	
6:20	117	486.2	.1	8.65	2,416	
6:30	127	486.3	.1	8.75	2,616	
6:50	147	486.45	.15	8.9	3,016	Pump off

4/22/17

Groundwater Extraction Well Development

Jetting

106 IN-1

Crystal Harbee

Date	Time	Depth (ft bgs)	Jetting Rate (gpm)	Pumping Rate (gpm)	Imhoff Cone Measurement (mL sediment per L water)	Comments
4/22/17	0849	478.5	19	22	0	Start Jet/Pump
	0850	479.5			under .5	
	0851	480.5			↓	
	0852	481.5			↓	minimal silt v. fine
	0853	482.5			↓	sand observed in
	0854	483.5			↓	each cone. About
	0855	484.5			↓	2-3 cones per interval
	0856	485.5			↓	
	0857	486.5			↓	
	0858	487.5			↓	
	0859	488.5			↓	
	0900	489.5			↓	
	0901	490.5			↓	
	0902	491.5			↓	
	0903	492.5			↓	
	0904	493.5			↓	
Stop jet	0905	494.5			↓	→ Jet off, pump running
	0913	495			Pump imhoff under 0.5 mL/L	→ Stop pumping. Evaluate
	0925	495			under 0.5 during jet.	→ Jet on, pump running.
begin bottom up jet	0927	494			↓	
	0928	493			↓	
	0929	492			↓	
	0930	491			↓	
	0931	490			↓	
	0932	489			↓	v. minimal silt and
	0933	488			↓	v. fine sand
	0934	487			↓	
	0935	486			↓	
	0936	485			↓	
	0937	484			↓	
	0938	483			↓	
	0939	482			↓	
	0940	481			↓	
Stop jet	0941	480			↓	→ Jet off, pump. Drop
	0948	494			Tank / Drum	Pump to near bottom of screen to
Start jet top down 3-ft increments 5 min each	1021	~480	35	22	<0.5 / <0.5	pump. Just off pump.
	1024	~483			↓ / ↓	→ Jet @ 35 gpm
	1027	~486			↓ / ↓	→ pump to catch up
	1033	~489				→ jet again

4/22/17

Groundwater Extraction Well Development

Jetting KAFB-106IN 1

Date	Time	Depth (ft bgs)	Jetting Rate (gpm)	Pumping Rate (gpm)	Imhoff Cone Measurement (mL sediment per L water)	Comments
4/22/17	1035	~492	35 gpm	22 gpm	<0.5 ml/L	jet/pump
	1038	~495	35 gpm	~2 gpm	~0.2 ml	imhoff from tank and
	1040	~497	0 gpm	22 gpm	~0.2 ml	drum v. clean.
	1048	~497				pump 22 gpm
						pump off

Stop jet pump off

Groundwater Extraction Well Development

Jetting 106IN1 4/28/17

Date	Time	Depth (ft bgs)	Jetting Rate (gpm)	Pumping Rate (gpm)	Imhoff Cone Measurement (mL sediment per L water)	Comments
4/28	0816	477.5	20.3	23.0		
4/28	0817	478.5	20.3	23.0	0 mL/L	Pump on; jet on
4/28	0818	479.5	20.3	23.0	0 mL/L	few grains
4/28	0819	480.5	20.3	23.0	0 mL/L	few grains
4/28	0820	481.5	20.3	23.0	~0.1 mL/L	slightly cloudy
4/28	0821	482.5	20.3	23.0	0 mL/L	slightly cloudy
4/28	0822	483.5	20.3	23.0	0 mL/L	clear
4/28	0823	484.5	20.3	23.0	0 mL/L	clear, few grains, from beaker
4/28	0824	485.5	20.3	23.0	0 mL/L	few grains
4/28	0825	486.5	20.3	23.0	0 mL/L	slightly cloudy
4/28	0826	487.5	20.3	23.0	0 mL/L	Slightly cloudy
4/28	0827	488.5	20.3	23.0	<0.1 mL/L	few grains
4/28	0828	489.5	20.3	23.0	<0.1 mL/L	few grains, cloudy
4/28	0829	490.5	20.3	23.0	0 mL/L	
4/28	0830	491.5	20.3	23.0	0 mL/L	few grains
4/28	0831	492.5	20.3	23.0	0 mL/L	
4/28	0832	493.5	20.3	23.0	0 mL/L	Rotate jet, start downward
4/28	0833	492.5	20.3	23.0	0.2 mL/L	
4/28	0834	492.5	20.3	23.0	<0.2 mL/L	
4/28	0835	491.5	20.3	23.0	0.4 mL/L	
4/28	0836	490.5	20.3	23.0	~0.2 mL/L	slightly cloudy all silt and fine sand accumulate
4/28	0836	489.5	20.3	23.0	0.5-0.6 mL/L	
4/28	0837	488.5	20.3	23.0	0.3 mL/L	
4/28	0838	487.5	20.3	23.0	0.3 mL/L	
4/28	0839	486.5	20.3	23.0	0.5 mL/L	
4/28	0840	485.5	20.3	23.0	0.5 mL/L	
4/28	0841	484.5	20.3	23.0	0.9 mL/L	
4/28	0842	483.5	20.3	23.0	0.9 mL/L	
4/28	0843	482.5	20.3	23.0	0.6 mL/L	
4/28	0844	481.5	20.3	23.0	0.9 mL/L	
4/28	0845	480.5	20.3	23.0	0.8 mL/L	
4/28	0846	479.5	20.3	23.0	~0.7 mL/L	
4/28	0847	478.5	20.3	23.0	~0.8 mL/L	
4/28	0848	477.5	20.3	23.0	~0.9 mL/L	Jet off, pump on to clear casing.
4/28	0910			23.0		
4/28	0928		short 23 gpm pump test, No jet, Log on transducer.			
4/28	0951		Put pump near bottom			pump off. about 8.3 ft drawdown
Next page						

top to bottom

bottom to top

pump off

pump on

Groundwater Extraction Well Development

Jetting 106IN1

Date	Time	Depth (ft bgs)	Jetting Rate (gpm)	Pumping Rate (gpm)	Imhoff Cone Measurement (mL sediment per L water)	Comments
4/28	1021	493.5	19	23	0 mL/L	jet on, pump on
4/28	1022	492.5	19	23	0 mL/L	
4/28	1023	491.5	19	23	0.1 mL/L	
4/28	1024	490.5	19	23	0.1 mL/L	
4/28	1025	489.5	19	23	0.1 mL/L	
4/28	1026	488.5	19	23	0.1 mL/L	
4/28	1027	487.5	19	23	0.1 mL/L	
4/28	1028	486.5	19	23	0.2 mL/L	
4/28	1029	485.5	19	23	0.2 mL/L	
4/28	1030	484.5	19	23	0.5 mL/L	
4/28	1031	483.5	19	23	0.6 mL/L	
4/28	1032	482.5	19	23	0.7 mL/L	
4/28	1033	481.5	19	23	0.8 mL/L	
4/28	1034	480.5	19	23	0.9 mL/L	
4/28	1035	479.5	19	23	0.8 mL/L	
4/28	1036	478.5	19	23	0.9 mL/L	
4/28	1037	479.5	19	23	0.6 mL/L	
4/28	1038	480.5	19	23	0.9 mL/L	
4/28	1039	481.5	19	23	1.1 mL/L	
4/28	1040	482.5	19	23	2 mL/L	
4/28	1041	483.5	19	23	2 mL/L	
4/28	1042	484.5	19	23	1 mL/L	
4/28	1043	485.5	19	23	0.5 mL/L	
4/28	1044	486.5	19	23	0.2 mL/L	
4/28	1045	487.5	19	23	0.2 mL/L	
4/28	1046	488.5	19	23	0.1 mL/L	
4/28	1047	489.5	19	23	0.1 mL/L	
4/28	1048	490.5	19	23	<0.1 mL/L	
4/28	1049	491.5	19	23	<0.1 mL/L	
4/28	1050	492.5	19	23	<0.1 mL/L	
4/28	1051	493.5	19	23	0.2 mL/L	
4/28	1052	492.5	19	23	0.1-0.2 mL/L	
4/28	1053	491.5	19	23	0.2 mL/L	
4/28	1054	490.5	19	23	0.2 mL/L	
4/28	1055	489.5	19	23	0.2 mL/L	
4/28	1056	488.5	19	23	0.2 mL/L	
4/28	1057	487.5	19	23	0.2 mL/L	
4/28	1058	486.5	19	23	0.3 mL/L	

bottom to top

top to bottom

bottom to top

Groundwater Extraction Well Development

Jetting 106IN1

Date	Time	Depth (ft bgs)	Jetting Rate (gpm)	Pumping Rate (gpm)	Imhoff Cone Measurement (mL sediment per L water)	Comments
4/28	1059	485.5	19	23	0.3 mL/L	
4/28	1100	484.5	19	23	0.5 mL/L	
4/28	1101	483.5	19	23	0.4 mL/L	
4/28	1102	482.5	19	23	0.9 mL/L	
4/28	1103	481.5	19	23	1.5 mL/L	
4/28	1104	480.5	19	23	1.5 mL/L	
4/28	1105	479.5	19	23	0.7 mL/L	
4/28	1106	478.5	19	23	0.4 mL/L	
4/28	1107	479.5	19	23	0.4 mL/L	
4/28	1108	480.5	19	23	0.8 mL/L	
4/28	1109	481.5	19	23	2.0 mL/L	
4/28	1110	482.5	19	23	1.2 mL/L	
4/28	1111	483.5	19	23	1.0 mL/L	
4/28	1112	484.5	19	23	0.3 mL/L	
4/28	1113	485.5	19	23	0.3 mL/L	
4/28	1114	486.5	19	23	0.2 mL/L	
4/28	1115	487.5	19	23	0.1 mL/L	
4/28	1116	488.5	19	23	0.1 mL/L	
4/28	1117	489.5	19	23	0.2 mL/L	
4/28	1118	490.5	19	23	0.1 mL/L	
4/28	1119	491.5	19	23	0.2 mL/L	
4/28	1120	492.5	19	23	0.2 mL/L	
4/28	1121	493.5	19	23	0.2 mL/L	
4/28	1125	487	19	23	0.3 mL/L	Move jet up to 487'
4/28	1126	482	19	23	0.3 mL/L	Rotate jet
4/28	1127	481	19	23	0.3 mL/L	
4/28	1128	480	19	23	0.8 mL/L	
4/28	1129	479	19	23	0.5 mL/L	
4/28	1130	478.5	19	23	0.4 mL/L	
4/28	1132	478.5	19	23	0.5 mL/L	
4/28	1133	479.5	19	23	1.5 mL/L	
4/28	1134	480.5	19	23	0.5 mL/L	
4/28	1135	481.5	19	23	0.4 mL/L	
4/28	1136	482.5	19	23	0.2 mL/L	
4/28	1137	483.5	19	23	0.2 mL/L	
4/28	1138	484.5	19	23	0.2 mL/L	
4/28	1139	485.5	19	23	0.2 mL/L	
4/28	1140	486.5	19	23	0.1 mL/L	
4/28	1141	487.5	19	23	0.1 mL/L	

bottom to top

top to bottom

work on top 10 ft

Groundwater Extraction Well Development

Jetting 106IN1

Date	Time	Depth (ft bgs)	Jetting Rate (gpm)	Pumping Rate (gpm)	Imhoff Cone Measurement (mL sediment per L water)	Comments
4/28	1142	486.5	19	23	0.3	
4/28	1143	485.5	19	23	0.3	
4/28	1144	484.5	19	23	0.3	
4/28	1145	483.5	19	23	0.3	
4/28	1146	482.5	19	23	0.4	
4/28	1147	481.5	19	23	0.5	
4/28	1148	480.5	19	23	0.4	
4/28	1149	479.5	19	23	0.3	
4/28	1150	478	19	23	0.4	
4/28	1151	477.5	19	23	0.4	← jet off, move pump down and pump to clean casing
4/28	1152	493.5	—	23		←
4/28	1220			23		
4/28	1402	493.5	30	23	0.3	~~turn on~~ extraction pump. Drawdown test.
4/28	1403	492.5	30	23	<0.1	
4/28	1404	491.5	30	23	0.4	
4/28	1405	490.5	30	23	0.2	Continue jet/pump.
4/28	1406	489.5	30	23	0.3	
4/28	1407	488.5	30	23	0.2	
4/28	1408	487.5	30	23	0.2	
4/28	1409	486.5	30	23	0.4	
4/28	1410	485.5	30	23	0.4	
4/28	1411	484.5	30	23	0.5	
4/28	1412	483.5	30	23	0.2	
4/28	1413	482.5	30	23	0.6	
4/28	1414	481.5	30	23	1.0	
4/28	1415	480.5	30	23	1.5	
4/28	1416	479.5	30	23	1.2	
4/28	1417	478.5	30	23	1.5	
4/28	1418	477.5	30	23	1.5	Rotate Jet
4/28	1419	478.5	30	23	1.2	
4/28	1420	479.5	30	23	1.0	
4/28	1421	480.5	30	23	0.8	
4/28	1422	481.6	30	23	0.7	
4/28	1423	482.5	30	23	0.5	
4/28	1424	483.5	30	23	0.4	
4/28	1425	484.5	30	23	0.2	
4/28	1426	485.5	30	23	0.2	
4/28	1427	486.5	30	23	0.1	

Jetting bottom to top

Jetting
~~Constant Rate Test~~
~~Water Levels~~

Date 4/28/17

Personnel TK, CH

Well ID KAFB-106INJ

Start Time

~~Water Level~~ Jetting						
Date/Time		~~Water Level (feet below vault)~~ Depth ft bgs	~~Drawdown (feet)~~ Jetting Rate (gpm)	~~Transducer Depth (feet)~~ Pumping Rate (gpm)	~~Transducer battery (%)~~ Imho & conc (mL/L)	Comments
4/28	1428	487.5	30	23	0.2	
4/28	1429	488.5	30	23	0.3	
4/28	1430	489.5	30	23	0.3	
4/28	1431	490.5	30	23	0.2	
4/28	1432	491.5	30	23	0.4	
4/28	1433	492.5	30	23	0.2	
4/28	143	493.5	30	23	0.2	
4/28	1435	492.5	30	23	0.4	Rotate jet
4/28	1436	491.5	30	23	0.5	
4/28	1437	490.5	30	23	0.7	
4/28	1438	489.5	30	23	1.0	
4/28	1439	488.5	30	23	1.5	
4/28	1440	487.5	30	23	2.0	
4/28	1441	486.5	30	23	2.3	
4/28	1442	485.5	30	23	2.0	
4/28	1441	484.5	30	23	2.0	
4/28	1442	483.5	30	23	1.9	
4/28	1443	482.5	30	23	~2.5	
4/28	1444	481.5	30	23	~2.7	
4/28	1445	480.5	30	23	2.0	
4/28	1446	479.5	30	23	2.5	
4/28	1447	478.5	30	23	~2.4	
4/28	1448	477.5	30	23	1.2	Rotate jet, from baker
4/28	1449	478.5	30	23	1.6	
4/28	1450	479.5	30	23	~1.5	jet off, pump stop
4/28	1451	480.5	30	23	~1.5	clean casing. (Static was 17.8' under water.)
4/28	1452	481.5	30	23	1.8	1514 - pump off.
4/28	1453	482.5	30	23	3.5	Constant Rate Test 1538 start insitu log
4/28	1454	483.5	30	23	~2.0	1536 turn pump on. (adjust flow)
4/28	1455	484.5	30	23	~2.0	1540 pump at 20 gpm (adjusted)
4/28	1456	485.5	30	23	9.5	1740 pump off.
4/28	1457	486.5	30	23	3.0	End constant rate test.
4/28	1458	487.5	30	23	2.5	
4/28	1459	488.5	30	23	2.5	
4/28	1500	489.5	30	23	1.5	
4/28	1501	490.5	30	23	1.0	
4/28	1502	491.5	30	23	0.5	
4/28	1503	493	30	23		

Monitoring Well Completion Diagram KAFB-106MW1

Installation Start Date/Time: 1/8/17@ 0745
Installation End Date/Time: 1/12/17@1638
Completion Date: 3/24/17

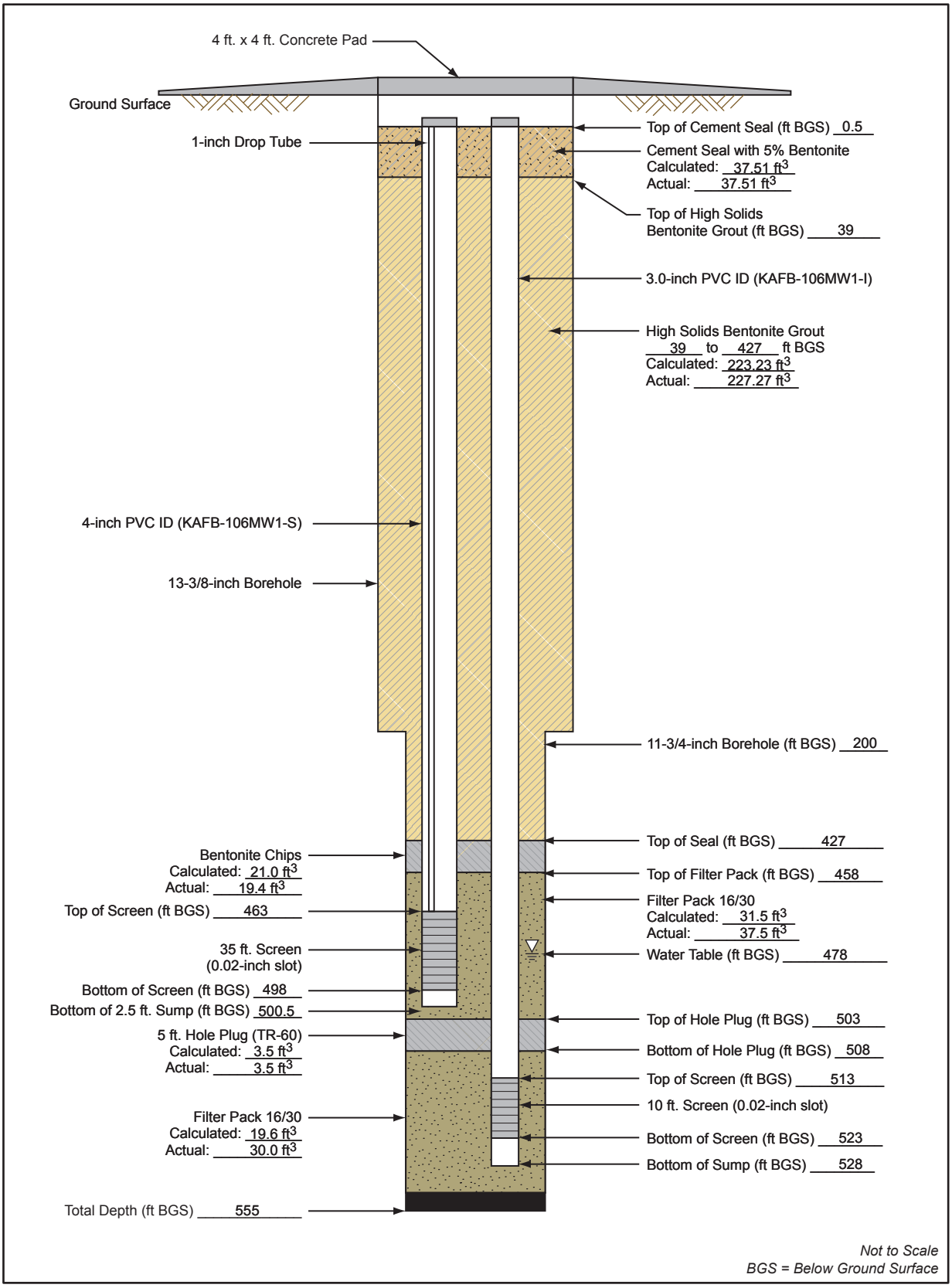

Not to Scale
BGS = Below Ground Surface

500433_03050100_A10

Borehole ID: KAFB-106MW1

Client: US Army Corps of Engineers
Project Location: KAFB, Albuquerque, NM
Project Name: KAFB RAPID SWMU ST-106/SS-111
Project Number: 500433

Date Started: 1/8/2017
Date TD Reached: 1/12/2017
Date Completed: 3/24/2017

Ground Elevation AMSL (ft): Not Recorded
Y Coordinate:
X Coordinate:

Hole Diameter Upper (in.): 13-3/8
Hole Diameter Lower (in.): 11-3/4
Surface Completion Type: Flush

Groundwater Levels BGS (ft):
At Time of Drilling: 478.00
At End of Drilling: Not Recorded
After Drilling: 476.30

Drillling Contractor: Cascade Drilling
Drilling Method: Air Rotary Casing Hammer
Logged By: T. Richards

Depth (ft)	Sample Type	Number	Headspace PID	Lithologic Log	Material Description	U.S.C.S.	Well Diagram	Remarks
0					No lithologic description.		Top of Casing/Top of Cement Seal	Location pot-holed with water knife to 5 feet bgs. No cuttings returned.
5					SILT with Gravel (ML); yellowish red (5YR 4/6); dry to slightly moist; 85% silt; 15% fine gravel; subrounded to rounded. Note: gravel is mafic.	ML		Begin drilling with 13 3/8" drive casing on 1/8/17 @ 0745.
10					Same as above (5 ft).			No hammering, no water added.
15					Same as above (5 ft).		Portland Cement with Bentonite	Kelly down @ 0750, new 20'connection @ 0755.
20					Same as above (5 ft).			PID = 0.0 ppm @ cyclone and breathing zone (BZ).
25								
30					Gravelly SILT (ML); light reddish brown (5YR 6/4); dry; 60% silt; 40% fine gravel; angular to rounded; trace very fine sand.			No hammering.

BOREHOLE_LOG - CB&I_DRILLING.GDT - 5/8/17 10:41 - Z:\KAFB RAPID\GINT\KAFB_RAPID_11-1-2016.GPJ

Borehole ID: KAFB-106MW1

Client: US Army Corps of Engineers
Project Location: KAFB, Albuquerque, NM
Project Name: KAFB RAPID SWMU ST-106/SS-111
Project Number: 500433

Date Started: 1/8/2017
Date TD Reached: 1/12/2017
Date Completed: 3/24/2017

Ground Elevation AMSL (ft): Not Recorded
Y Coordinate:
X Coordinate:

Hole Diameter Upper (in.): 13-3/8
Hole Diameter Lower (in.): 11-3/4
Surface Completion Type: Flush

Groundwater Levels BGS (ft):
At Time of Drilling: 478.00
At End of Drilling: Not Recorded
After Drilling: 476.30

Drillling Contractor: Cascade Drilling
Drilling Method: Air Rotary Casing Hammer
Logged By: T. Richards

Depth (ft)	Sample Type	Number	Headspace PID	Lithologic Log	Material Description	U.S.C.S.	Well Diagram	Remarks
30					Gravelly SILT (ML); light reddish brown (5YR 6/4); dry; 60% silt; 40% fine gravel; angular to rounded; trace very fine sand.			
35					Same as above (30 ft).			Kelly down @ 0804, new 20' connection @ 0811.
40							Top of High Solids Bentonite Grout	PID = 0.0 ppm @ cyclone and BZ. Hammering intermittently. No water added.
45					Same as above (30 ft); reddish brown (5YR 5/4); 50% silt; 50% fine to coarse gravel; angular to rounded; trace fine and medium sand. Note: gravel is mafics and quartz.	ML		
50					Same as above (30 ft); reddish brown (5YR 5/4); 50% silt; 50% fine to coarse gravel; angular to rounded; trace fine and medium sand. Note: gravel is mafics and quartz.			
55								
60					Same as above (30 ft); reddish brown (5YR 5/4); 50% silt; 50% fine to coarse gravel; angular to rounded; trace fine and medium sand. Note: gravel is mafics			Kelly down @ 0818, new 20' connection @ 0826.

Borehole ID: KAFB-106MW1

Client: US Army Corps of Engineers
Project Location: KAFB, Albuquerque, NM
Project Name: KAFB RAPID SWMU ST-106/SS-111
Project Number: 500433

Date Started: 1/8/2017
Date TD Reached: 1/12/2017
Date Completed: 3/24/2017

Ground Elevation AMSL (ft): Not Recorded
Y Coordinate:
X Coordinate:

Hole Diameter Upper (in.): 13-3/8
Hole Diameter Lower (in.): 11-3/4
Surface Completion Type: Flush

Groundwater Levels BGS (ft):
At Time of Drilling: 478.00
At End of Drilling: Not Recorded
After Drilling: 476.30

Drillling Contractor: Cascade Drilling
Drilling Method: Air Rotary Casing Hammer
Logged By: T. Richards

Depth (ft)	Sample Type	Number	Headspace PID	Lithologic Log	Material Description	U.S.C.S.	Well Diagram	Remarks
60					and quartz.			PID = 0.0 ppm @ cyclone and BZ.
					Gravelly SILT (ML); reddish brown (5YR 5/4); 50% silt; 50% fine to coarse gravel; angular to rounded; trace fine and medium sand. Note: gravel is mafics and quartz.			
65					Same as above (60 ft).			
70					SILT with Gravel (ML); yellowish red (5YR 5/6); dry; 80% silt; 20% fine gravel; angular to rounded.			Begin hammering. No water added.
75					Same as above (75 ft).	ML	High Solids Bentonite Grout	Kelly down @ 0831, new 20' connection @ 0837. PID = 0.0 ppm @ cyclone and BZ.
80					Same as above (70 ft).			
85								
90					SILT (ML); light reddish brown (5YR 6/4); dry; 90% silt; 10% fine gravel; rounded; trace fine sand.			Hammering. No water added.

BOREHOLE_LOG - CB&I_DRILLING.GDT - 5/8/17 10:41 - Z:\KAFB RAPID\GINT\KAFB_RAPID_11-1-2016.GPJ

Borehole ID: KAFB-106MW1

Client: US Army Corps of Engineers
Project Location: KAFB, Albuquerque, NM
Project Name: KAFB RAPID SWMU ST-106/SS-111
Project Number: 500433

Date Started: 1/8/2017
Date TD Reached: 1/12/2017
Date Completed: 3/24/2017

Ground Elevation AMSL (ft): Not Recorded
Y Coordinate:
X Coordinate:

Hole Diameter Upper (in.): 13-3/8
Hole Diameter Lower (in.): 11-3/4
Surface Completion Type: Flush

Groundwater Levels BGS (ft):
At Time of Drilling: 478.00
At End of Drilling: Not Recorded
After Drilling: 476.30

Drillling Contractor: Cascade Drilling
Drilling Method: Air Rotary Casing Hammer
Logged By: T. Richards

Depth (ft)	Sample Type	Number	Headspace PID	Lithologic Log	Material Description	U.S.C.S.	Well Diagram	Remarks
90					SILT (ML); light reddish brown (5YR 6/4); dry; 90% silt; 10% fine gravel; rounded; trace fine sand.	ML		Hammering. No water added.
95					Same as above (90 ft).			
100					Same as above (90 ft).			Kelly down @ 0845, new 20' connection @ 0857. PID = 0.0 ppm @ cyclone and BZ.
105					Same as above (90 ft).		High Solids Bentonite Grout	Hammering. No water added.
110					Same as above (90 ft).			
115					Poorly graded SAND with Silt and Gravel (SP-SM); very pale brown (10YR 7/3); dry; 60% fine to medium sand; 30% fine gravel; angular to rounded; 10% silt. Note: gravel is granitic minerals and mafics.	SP-SM		Hammering. No water added.
120								Kelly down @ 1416, new 20' connection @ 1423. PID = 0.0 ppm @ cyclone and BZ.

BOREHOLE_LOG - CB&I_DRILLING.GDT - 5/8/17 10:41 - Z:\KAFB RAPID\GINT\KAFB_RAPID_11-1-2016.GPJ

Borehole ID: KAFB-106MW1

Client: US Army Corps of Engineers
Project Location: KAFB, Albuquerque, NM
Project Name: KAFB RAPID SWMU ST-106/SS-111
Project Number: 500433

Date Started: 1/8/2017
Date TD Reached: 1/12/2017
Date Completed: 3/24/2017

Ground Elevation AMSL (ft): Not Recorded
Y Coordinate:
X Coordinate:

Hole Diameter Upper (in.): 13-3/8
Hole Diameter Lower (in.): 11-3/4
Surface Completion Type: Flush

Groundwater Levels BGS (ft):
At Time of Drilling: 478.00
At End of Drilling: Not Recorded
After Drilling: 476.30

Drillling Contractor: Cascade Drilling
Drilling Method: Air Rotary Casing Hammer
Logged By: T. Richards

Depth (ft)	Sample Type	Number	Headspace PID	Lithologic Log	Material Description	U.S.C.S.	Well Diagram	Remarks
120					Poorly graded SAND with Silt and Gravel (SP-SM); very pale brown (10YR 7/3); dry; 60% fine to medium sand; 30% fine gravel; angular to rounded; 10% silt. Note: gravel is granitic minerals and mafics.	SP-SM		
125					Silty SAND (SM); yellowish red (5YR 5/6); 50% fine sand; 10% fine gravel; subrounded to rounded; 40% silt. Note: gravel is granitic minerals and mafics.	SM		Hammering. No water added downhole. Water added at cyclone for dust suppression.
130					Same as above (126 ft).			
135					Same as above (126 ft).		High Solids Bentonite Grout	Kelly down @ 1515, new 20' connection @ 1523. PID = 0.0 ppm at cyclone and BZ.
140					Clayey SAND (SC); yellowish red (5YR 5/6); moist; 60% fine sand; trace fine gravel; 40% clay; trace silt.	SC		Hammering. No water added at cyclone or downhole.
145								
150								

BOREHOLE_LOG - CB&I_DRILLING.GDT - 5/8/17 10:41 - Z:\KAFB RAPID\GINT\KAFB_RAPID_11-1-2016.GPJ

Borehole ID: KAFB-106MW1

Client: US Army Corps of Engineers
Project Location: KAFB, Albuquerque, NM
Project Name: KAFB RAPID SWMU ST-106/SS-111
Project Number: 500433

Date Started: 1/8/2017
Date TD Reached: 1/12/2017
Date Completed: 3/24/2017

Ground Elevation AMSL (ft): Not Recorded
Y Coordinate:
X Coordinate:

Hole Diameter Upper (in.): 13-3/8
Hole Diameter Lower (in.): 11-3/4
Surface Completion Type: Flush

Groundwater Levels BGS (ft):
At Time of Drilling: 478.00
At End of Drilling: Not Recorded
After Drilling: 476.30

Drillling Contractor: Cascade Drilling
Drilling Method: Air Rotary Casing Hammer
Logged By: T. Richards

Depth (ft)	Sample Type	Number	Headspace PID	Lithologic Log	Material Description	U.S.C.S.	Well Diagram	Remarks
150					Clayey SAND (SC); yellowish red (5YR 5/6); moist; 60% fine sand; trace fine gravel; 40% clay; trace silt.	SC		PID = 0.0 ppm @ cyclone and BZ.
155					Same as above (150 ft).			Kelly down @ 1535, new 20' connection @ 1548.
160					Well-graded SAND (SW); reddish yellow (7.5YR 6/6); slightly moist; 90% fine to coarse sand; 10% fine gravel.	SW		PID = 0.0 ppm @ cyclone and BZ.
165					Same as above (159 ft).		High Solids Bentonite Grout	Hammering. No water added.
170					Poorly graded SAND (SP); light brown (7.5YR 6/4); slightly moist; 100% fine to medium sand; trace fine gravel.	SP		
175					Same as above (170 ft).			Kelly down @ 1602, new 20' connection @ 1608. PID = 0.0 ppm @ cyclone and BZ.
180								

BOREHOLE_LOG - CB&I_DRILLING.GDT - 5/8/17 10:41 - Z:\KAFB RAPID\GINT\KAFB_RAPID_11-1-2016.GPJ

Borehole ID: KAFB-106MW1

Client: US Army Corps of Engineers
Project Location: KAFB, Albuquerque, NM
Project Name: KAFB RAPID SWMU ST-106/SS-111
Project Number: 500433

Date Started: 1/8/2017
Date TD Reached: 1/12/2017
Date Completed: 3/24/2017

Ground Elevation AMSL (ft): Not Recorded
Y Coordinate:
X Coordinate:

Hole Diameter Upper (in.): 13-3/8
Hole Diameter Lower (in.): 11-3/4
Surface Completion Type: Flush

Groundwater Levels BGS (ft):
At Time of Drilling: 478.00
At End of Drilling: Not Recorded
After Drilling: 476.30

Drillling Contractor: Cascade Drilling
Drilling Method: Air Rotary Casing Hammer
Logged By: T. Richards

Depth (ft)	Sample Type	Number	Headspace PID	Lithologic Log	Material Description	U.S.C.S.	Well Diagram	Remarks
180					Poorly graded SAND (SP); light brown (7.5YR 6/4); slightly moist; 100% fine to medium sand; trace fine gravel.			Hammering. No water added.
185					Same as above (180 ft).	SP		
190								
195					Well-graded SAND with Gravel (SW); light brown (7.5YR 6/4); moist; 80% fine to coarse sand; 20% fine gravel to 1/2"; angular to rounded. Note: gravel is granitic and mafics.		High Solids Bentonite Grout	Hammering. No water added.
200					Well-graded SAND (SW); light brown (7.5YR 6/4); slightly moist; 90% fine to medium sand; trace coarse sand; 10% fine gravel to <1/2"; angular to rounded.	SW		Kelly down @ 1627. End drilling with 13 3/8" casing at 200 ft. Begin drilling with 11 3/4" casing @ 1300 on 1/9/17.
205					Same as above (200 ft).			No hammering. No water added.
210								

BOREHOLE_LOG - CB&I_DRILLING.GDT - 5/8/17 10:41 - Z:\KAFB RAPID\GINT\KAFB_RAPID_11-1-2016.GPJ

Borehole ID: KAFB-106MW1

Client: US Army Corps of Engineers
Project Location: KAFB, Albuquerque, NM
Project Name: KAFB RAPID SWMU ST-106/SS-111
Project Number: 500433

Date Started: 1/8/2017
Date TD Reached: 1/12/2017
Date Completed: 3/24/2017

Ground Elevation AMSL (ft): Not Recorded
Y Coordinate:
X Coordinate:

Hole Diameter Upper (in.): 13-3/8
Hole Diameter Lower (in.): 11-3/4
Surface Completion Type: Flush

Groundwater Levels BGS (ft):
At Time of Drilling: 478.00
At End of Drilling: Not Recorded
After Drilling: 476.30

Drillling Contractor: Cascade Drilling
Drilling Method: Air Rotary Casing Hammer
Logged By: T. Richards

Depth (ft)	Sample Type	Number	Headspace PID	Lithologic Log	Material Description	U.S.C.S.	Well Diagram	Remarks
210					Well-graded SAND with Gravel (SW); reddish yellow (7.5YR 6/6); moist; 75% fine to coarse sand; 25% fine gravel to 1"; subrounded to rounded. @ 212 ft: Same as above (210 ft); 70% fine to coarse sand; 30% fine gravel.			No hammering. No water added.
215								Hammering.
								Kelly down @ 1335, new 20' connection @ 1347.
220					Same as above (210 ft); 70% fine to coarse sand; 30% fine gravel.			End of 1/9/17. Resume drilling @ 1040 on 1/10/17.
225					Same as above (210 ft); brown (7.5YR 5/4); 70% fine to coarse sand; 30% fine gravel to 3/4". Note: gravel is granitic minerals and mafics.	SW	High Solids Bentonite Grout	
230								Hammering. No water added.
235					Same as above (210 ft); brown (7.5YR 5/4); 70% fine to coarse sand; 30% fine gravel to 3/4". Note: gravel is granitic minerals and mafics.			
240								Kelly down @ 1054, new 20' connection @ 1059. PID = 0.1 ppm @ cyclone and BZ.

BOREHOLE_LOG - CB&I_DRILLING.GDT - 5/8/17 10:41 - Z:\KAFB RAPID\GINT\KAFB_RAPID_11-1-2016.GPJ

Borehole ID: KAFB-106MW1

Client: US Army Corps of Engineers
Project Location: KAFB, Albuquerque, NM
Project Name: KAFB RAPID SWMU ST-106/SS-111
Project Number: 500433

Date Started: 1/8/2017
Date TD Reached: 1/12/2017
Date Completed: 3/24/2017

Ground Elevation AMSL (ft): Not Recorded
Y Coordinate:
X Coordinate:

Hole Diameter Upper (in.): 13-3/8
Hole Diameter Lower (in.): 11-3/4
Surface Completion Type: Flush

Groundwater Levels BGS (ft):
At Time of Drilling: 478.00
At End of Drilling: Not Recorded
After Drilling: 476.30

Drillling Contractor: Cascade Drilling
Drilling Method: Air Rotary Casing Hammer
Logged By: T. Richards

Depth (ft)	Sample Type	Number	Headspace PID	Lithologic Log	Material Description	U.S.C.S.	Well Diagram	Remarks
240					Well-graded SAND with Gravel (SW); brown (7.5YR 5/4); moist; 70% fine to coarse sand; 30% fine gravel to 3/4"; subrounded to rounded. Note: gravel is granitic minerals and mafics.	SW	High Solids Bentonite Grout	
245					Same as above (240 ft).			Hammering. No water added.
250					Same as above (240 ft); % fine sand increases; fine gravel to 1"; trace silt.			
255								
260					Silty SAND with Gravel (SM); brown (7.5YR 5/3); 60% fine to medium sand; 20% fine gravel to 7/8"; subangular to rounded; 20% silt. Note: gravel is granitic minerals and mafics.	SM		Kelly down @ 1109, new 20' connection @ 1115. PID = 0.1 ppm @ BZ and cyclone.
265								Hammering. Water added at cyclone.
270					Sandy lean CLAY (CL); yellowish brown (10YR 5/4); firm; 65% clay; 30% fine sand; 5% fine gravel to 1/2"; subrounded to rounded. Note: gravel is granitic minerals and mafics.	CL		

BOREHOLE_LOG - CB&I_DRILLING.GDT - 5/8/17 10:41 - Z:\KAFB RAPID\GINT\KAFB_RAPID_11-1-2016.GPJ

Borehole ID: KAFB-106MW1

Client: US Army Corps of Engineers
Project Location: KAFB, Albuquerque, NM
Project Name: KAFB RAPID SWMU ST-106/SS-111
Project Number: 500433

Date Started: 1/8/2017
Date TD Reached: 1/12/2017
Date Completed: 3/24/2017

Ground Elevation AMSL (ft): Not Recorded
Y Coordinate:
X Coordinate:

Hole Diameter Upper (in.): 13-3/8
Hole Diameter Lower (in.): 11-3/4
Surface Completion Type: Flush

Groundwater Levels BGS (ft):
At Time of Drilling: 478.00
At End of Drilling: Not Recorded
After Drilling: 476.30

Drillling Contractor: Cascade Drilling
Drilling Method: Air Rotary Casing Hammer
Logged By: T. Richards

Depth (ft)	Sample Type	Number	Headspace PID	Lithologic Log	Material Description	U.S.C.S.	Well Diagram	Remarks
270					Sandy lean CLAY (CL); yellowish brown (10YR 5/4); firm; 65% clay; 30% fine sand; 5% fine gravel to 1/2"; subrounded to rounded. Note: gravel is granitic minerals and mafics.	CL		Hammering. Water added at cyclone.
275					Same as above (270 ft).	CL		Kelly down @ 1130, new 20' connection @ 1136.
280					Same as above (270 ft).	CL		PID = 0.1 ppm @ BZ and 0.0 ppm @ cyclone.
285					Well-graded SAND (SW); light yellowish brown (10YR 6/4); moist; 95% fine to coarse sand; 5% fine gravel to 3/4"; subrounded to rounded. Note: gravel is granitic minerals and mafics.	SW	High Solids Bentonite Grout	Hammering. No water added downhole.
290					Same as above (290 ft).	SW		
295					Poorly graded SAND (SP); very pale brown (10YR 7/4); slightly moist; 100% fine sand; trace fine gravel to 1/8".	SP		Kelly down @ 1149, new 20' connection @ 1153. PID = 0.0 ppm @ cyclone and 0.1 ppm @ BZ.
300								

BOREHOLE_LOG - CB&I_DRILLING.GDT - 5/8/17 10:41 - Z:\KAFB RAPID\GINT\KAFB_RAPID_11-1-2016.GPJ

Borehole ID: KAFB-106MW1

Client: US Army Corps of Engineers
Project Location: KAFB, Albuquerque, NM
Project Name: KAFB RAPID SWMU ST-106/SS-111
Project Number: 500433

Date Started: 1/8/2017
Date TD Reached: 1/12/2017
Date Completed: 3/24/2017

Ground Elevation AMSL (ft): Not Recorded
Y Coordinate:
X Coordinate:

Hole Diameter Upper (in.): 13-3/8
Hole Diameter Lower (in.): 11-3/4
Surface Completion Type: Flush

Groundwater Levels BGS (ft):
At Time of Drilling: 478.00
At End of Drilling: Not Recorded
After Drilling: 476.30

Drillling Contractor: Cascade Drilling
Drilling Method: Air Rotary Casing Hammer
Logged By: T. Richards

Depth (ft)	Sample Type	Number	Headspace PID	Lithologic Log	Material Description	U.S.C.S.	Well Diagram	Remarks
300					Poorly graded SAND (SP); very pale brown (10YR 7/4); slightly moist; 100% fine sand; trace fine gravel to 1/8".	SP		Hammering. No water added downhole.
305					Well-graded SAND (SW); brown (7.5YR 5/4); moist; 100% fine to coarse sand; trace fine gravel to 1/8".	SW		
310					Same as above (305 ft).			
315					Well-graded SAND with Gravel (SW); strong brown (7.5YR 5/6); dry to slightly moist; 75% fine to coarse sand; 20% fine gravel to 3/4"; 5% silt.		High Solids Bentonite Grout	Hammering. No water added downhole.
320								Kelly down @ 1206, new 20' connection @ 1215. PID = 0.1 ppm @ BZ and top of casing, and 0.0 ppm @ cyclone.
325					Well-graded SAND (SW); brown (10YR 5/3); dry to slightly moist; 100% fine to coarse sand; trace silt.			
330					Well-graded GRAVEL with Sand (GW); yellowish brown (10YR 5/4); 60% fine to coarse gravel to 1.25"; 40% fine to coarse sand.	GW		Hammering. No water added downhole; added at cyclone.

BOREHOLE_LOG - CB&I_DRILLING.GDT - 5/8/17 10:41 - Z:\KAFB RAPID\GINT\KAFB_RAPID_11-1-2016.GPJ

Borehole ID: KAFB-106MW1

Client: US Army Corps of Engineers
Project Location: KAFB, Albuquerque, NM
Project Name: KAFB RAPID SWMU ST-106/SS-111
Project Number: 500433

Date Started: 1/8/2017
Date TD Reached: 1/12/2017
Date Completed: 3/24/2017

Ground Elevation AMSL (ft): Not Recorded
Y Coordinate:
X Coordinate:

Hole Diameter Upper (in.): 13-3/8
Hole Diameter Lower (in.): 11-3/4
Surface Completion Type: Flush

Groundwater Levels BGS (ft):
At Time of Drilling: 478.00
At End of Drilling: Not Recorded
After Drilling: 476.30

Drillling Contractor: Cascade Drilling
Drilling Method: Air Rotary Casing Hammer
Logged By: T. Richards

Depth (ft)	Sample Type	Number	Headspace PID	Lithologic Log	Material Description	U.S.C.S.	Well Diagram	Remarks
330					Well-graded GRAVEL with Sand (GW); slightly moist; yellowish brown (10YR 5/4); 60% fine to coarse gravel to 1.35"; 40% fine to coarse sand.	GW		Hammering. No water added downhole.
					Well-graded SAND (SW); brown (10YR 5/4); slightly moist; 95% fine to coarse sand; 5% fine gravel to 1/4"; trace silt.			
335								
					Same as above (332 ft).			Kelly down @ 1323, new 20' connection @ 1330. PID = 0.0 ppm @ BZ, cyclone, and casing top.
340								
					Same as above (332 ft).			
345						SW	High Solids Bentonite Grout	
					Well-graded SAND with Gravel (SW); yellowish brown (10YR 5/6); 75% fine to coarse sand; 25% fine gravel to 3/4"; subrounded to rounded. Note: gravel is granitic minerals and mafics.			Rig repair @ 1350, resume drilling @ 1540.
350								
								Hammering. No water added downhole; added at cyclone.
355					Same as above (348 ft.)			
								Kelly down @ 1550, new 20' connection @ 1555. PID = 0.0 ppm @ BZ, cyclone, and casing top.
360								

BOREHOLE_LOG - CB&I_DRILLING.GDT - 5/8/17 10:41 - Z:\KAFB RAPID\GINT\KAFB_RAPID_11-1-2016.GPJ

Borehole ID: KAFB-106MW1

Client: US Army Corps of Engineers
Project Location: KAFB, Albuquerque, NM
Project Name: KAFB RAPID SWMU ST-106/SS-111
Project Number: 500433

Date Started: 1/8/2017
Date TD Reached: 1/12/2017
Date Completed: 3/24/2017

Ground Elevation AMSL (ft): Not Recorded
Y Coordinate:
X Coordinate:

Hole Diameter Upper (in.): 13-3/8
Hole Diameter Lower (in.): 11-3/4
Surface Completion Type: Flush

Groundwater Levels BGS (ft):
At Time of Drilling: 478.00
At End of Drilling: Not Recorded
After Drilling: 476.30

Drillling Contractor: Cascade Drilling
Drilling Method: Air Rotary Casing Hammer
Logged By: T. Richards

Depth (ft)	Sample Type	Number	Headspace PID	Lithologic Log	Material Description	U.S.C.S.	Well Diagram	Remarks
360					Well-graded SAND with Gravel (SW); yellowish brown (10YR 5/6); 75% fine to coarse sand; 25% fine gravel to 3/4"; subrounded to rounded. Note: gravel is granitic minerals and mafics.	SW	High Solids Bentonite Grout	Hammering. No water added downhole.
365					Same as above (360 ft).			
370					Same as above (360 ft).			
375					Same as above (360 ft).			Kelly down @ 1623, new 20' connection @ 1630. PID = 0.1 ppm @ BZ and 0.0 ppm @ cyclone and casing top.
380					Same as above (360 ft).			
385					Same as above (360 ft).			Hammering. No water added downhole.
390								

BOREHOLE_LOG - CB&I_DRILLING.GDT - 5/8/17 10:41 - Z:\KAFB RAPID\GINT\KAFB_RAPID_11-1-2016.GPJ

Borehole ID: KAFB-106MW1

Client: US Army Corps of Engineers
Project Location: KAFB, Albuquerque, NM
Project Name: KAFB RAPID SWMU ST-106/SS-111
Project Number: 500433

Date Started: 1/8/2017
Date TD Reached: 1/12/2017
Date Completed: 3/24/2017

Ground Elevation AMSL (ft): Not Recorded
Y Coordinate:
X Coordinate:

Hole Diameter Upper (in.): 13-3/8
Hole Diameter Lower (in.): 11-3/4
Surface Completion Type: Flush

Groundwater Levels BGS (ft):
At Time of Drilling: 478.00
At End of Drilling: Not Recorded
After Drilling: 476.30

Drillling Contractor: Cascade Drilling
Drilling Method: Air Rotary Casing Hammer
Logged By: T. Richards

Depth (ft)	Sample Type	Number	Headspace PID	Lithologic Log	Material Description	U.S.C.S.	Well Diagram	Remarks
390					Well-graded SAND with Gravel (SW); yellowish brown (10YR 5/6); 75% fine to coarse sand; 25% fine gravel to 3/4"; subrounded to rounded. Note: gravel is granitic minerals and mafics.	SW		Hammering. No water added downhole.
395					Same as above (390 ft).			Kelly down @ 1700, new 20' connection.
400					Same as above (390 ft)			End of 1/10/17. Resume drilling @ 0738 on 1/11/17.
405					Poorly graded SAND (SP); pale brown (10YR 6/3); dry to slightly moist; 100% fine sand; trace medium sand; trace silt.	SP	High Solids Bentonite Grout	Hammering. No water added downhole
410					Same as above (406 ft).			
415					Same as above (406 ft).			Kelly down @ 0757, new 20' connection @ 0802. PID = 0.1 ppm @ BZ and 0.0 ppm @ cyclone.
420								

BOREHOLE_LOG - CB&I_DRILLING.GDT - 5/8/17 10:41 - Z:\KAFB RAPID\GINT\KAFB_RAPID_11-1-2016.GPJ

Borehole ID: KAFB-106MW1

Client: US Army Corps of Engineers
Project Location: KAFB, Albuquerque, NM
Project Name: KAFB RAPID SWMU ST-106/SS-111
Project Number: 500433

Date Started: 1/8/2017
Date TD Reached: 1/12/2017
Date Completed: 3/24/2017

Ground Elevation AMSL (ft): Not Recorded
Y Coordinate:
X Coordinate:

Hole Diameter Upper (in.): 13-3/8
Hole Diameter Lower (in.): 11-3/4
Surface Completion Type: Flush

Groundwater Levels BGS (ft):
At Time of Drilling: 478.00
At End of Drilling: Not Recorded
After Drilling: 476.30

Drillling Contractor: Cascade Drilling
Drilling Method: Air Rotary Casing Hammer
Logged By: T. Richards

Depth (ft)	Sample Type	Number	Headspace PID	Lithologic Log	Material Description	U.S.C.S.	Well Diagram	Remarks
420					Poorly graded SAND (SP); pale brown (10YR 6/4); dry to slightly moist; 100% fine sand; trace medium sand; trace silt.	SP		Hammering. No water added downhole.
					Well-graded SAND (SW); yellowish brown (10YR 5/4); dry; 90% fine to coarse sand; 10% fine gravel to 1/2"; trace silt.		High Solids Bentonite Grout	
425					Same as above (421 ft).		Top of Bentonite Seal	Stop drilling for rig repair @ 0815. Resume drilling @ 1315.
430								
435					Same as above (421 ft); grayish brown (10YR 5/2); 5% fine gravel to 1/4"; 5% silt.	SW		
440								Kelly down @ 1330, new 20' connection @1400. PID = 0.1 ppm @ BZ and 0.0 ppm @ cyclone.
445					Well-graded SAND with Gravel (SW); brownish yellow (10YR 6/6); dry; 80% fine to coarse sand; 20% fine gravel to 3/4"; trace silt. Note: gravel is granitic minerals and mafics.			Hammering. No water added downhole.
450								Stop drilling for rig repair @ 1420. Resume drilling @ 1425.

BOREHOLE_LOG - CB&I_DRILLING.GDT - 5/8/17 10:41 - Z:\KAFB RAPID\GINT\KAFB_RAPID_11-1-2016.GPJ

Borehole ID: KAFB-106MW1

Client: US Army Corps of Engineers
Project Location: KAFB, Albuquerque, NM
Project Name: KAFB RAPID SWMU ST-106/SS-111
Project Number: 500433

Date Started: 1/8/2017
Date TD Reached: 1/12/2017
Date Completed: 3/24/2017

Ground Elevation AMSL (ft): Not Recorded
Y Coordinate:
X Coordinate:

Hole Diameter Upper (in.): 13-3/8
Hole Diameter Lower (in.): 11-3/4
Surface Completion Type: Flush

Groundwater Levels BGS (ft):
At Time of Drilling: 478.00
At End of Drilling: Not Recorded
After Drilling: 476.30

Drillling Contractor: Cascade Drilling
Drilling Method: Air Rotary Casing Hammer
Logged By: T. Richards

Depth (ft)	Sample Type	Number	Headspace PID	Lithologic Log	Material Description	U.S.C.S.	Well Diagram	Remarks
450					Well-graded SAND (SW); strong brown (7.5YR 5/6); dry; 100% fine to coarse sand; trace silt.	SW	Bentonite Seal	Hammering. No water added downhole.
455					Same as above (450 ft).			
460					Poorly graded SAND (SP); dark yellowish brown (10YR 4/6); 90% fine sand; trace medium sand; 5% fine gravel to 3/4"; subrounded to rounded; 5% silt.	SP	Top of 16/30 Sand	Water added at cyclone. Kelly down @ 1440. Pull back 100' casing due to sand locking. End of 1/11/17. Resume drilling @ 1036 on 1/12/17.
465			0.0				Top of 4" Schedule 80 PVC 0.020" Screen	PID = 0.0 ppm @ BZ and cyclone.
470			0.8		Poorly graded SAND with Silt (SP); yellowish brown (10YR 5/4); 80% fine to medium sand; 10% fine gravel to 1/2"; rounded; 10% silt.			Hammering. No water added downhole.
475			1.2		Well-graded SAND with Gravel (SW); yellowish brown (10YR 5/6); moist; 75% fine to coarse sand; 25% fine gravel to 3/4"; rounded; trace silt. Note: gravel is granitic minerals and mafics.	SW		Slight fuel odor @ 473 feet. Hammering. Rate of casing penetration slowing.
			8.4					Kelly down @ 1115, new 20' connection @ 1120. PID = 0.0 ppm @ BZ and 3.7 ppm @ cyclone.
480					Poorly graded SAND (SP); description on next page.	SP		

BOREHOLE_LOG - CB&I_DRILLING.GDT - 5/8/17 10:41 - Z:\KAFB RAPID\GINT\KAFB_RAPID_11-1-2016.GPJ

Borehole ID: KAFB-106MW1

Client: US Army Corps of Engineers
Project Location: KAFB, Albuquerque, NM
Project Name: KAFB RAPID SWMU ST-106/SS-111
Project Number: 500433

Date Started: 1/8/2017
Date TD Reached: 1/12/2017
Date Completed: 3/24/2017

Ground Elevation AMSL (ft): Not Recorded
Y Coordinate:
X Coordinate:

Hole Diameter Upper (in.): 13-3/8
Hole Diameter Lower (in.): 11-3/4
Surface Completion Type: Flush

Groundwater Levels BGS (ft):
At Time of Drilling: 478.00
At End of Drilling: Not Recorded
After Drilling: 476.30

Drillling Contractor: Cascade Drilling
Drilling Method: Air Rotary Casing Hammer
Logged By: T. Richards

Depth (ft)	Sample Type	Number	Headspace PID	Lithologic Log	Material Description	U.S.C.S.	Well Diagram	Remarks
480			1.5		Poorly graded SAND (SP); strong brown (7.5YR 5/6); wet; 90% fine sand; trace medium sand; 10% fine gravel to 1/2"; trace silt. Note: fuel odor.	SP		Hammering, slow drilling.
485					Same as above (480 ft).			PID = 3.8 ppm @ cyclone and 0.0 ppm @ BZ.
490			9.1		Same as above (480 ft).			PID = 23.4 ppm @ cyclone. PID = 90.1 ppm @ cyclone.
			11.1					
			347.7					PID = 392.5 ppm @ cyclone.
495					Same as above (480 ft).			
			111.3				- Bottom of Screen - Sump	Kelly down @ 1215, new 20' connection @ 1315.
500					Well-graded SAND with Gravel (SW); dark yellowish brown (10YR 4/4); wet; 80% fine to coarse sand; 20% fine gravel to 1"; subrounded to rounded. Note: gravel is granitic minerals and mafics.	SW		PID = 9.5 ppm @ BZ and 36.5 ppm @ top of casing.
			62.1				- Top of TR-60 Plug	PID = 54.3 ppm @ cyclone and 2.7 ppm @ BZ.
505					Same as above (500 ft).			
			57.2				- Top of 16/30 Sand	Hammering, slow drilling. PID = 54.7 ppm @ cyclone and 2.1 ppm @ BZ.
510								

BOREHOLE_LOG - CB&I_DRILLING.GDT - 5/8/17 10:41 - Z:\KAFB RAPID\GINT\KAFB_RAPID_11-1-2016.GPJ

Borehole ID: KAFB-106MW1

Client: US Army Corps of Engineers
Project Location: KAFB, Albuquerque, NM
Project Name: KAFB RAPID SWMU ST-106/SS-111
Project Number: 500433

Date Started: 1/8/2017
Date TD Reached: 1/12/2017
Date Completed: 3/24/2017

Ground Elevation AMSL (ft): Not Recorded
Y Coordinate:
X Coordinate:

Hole Diameter Upper (in.): 13-3/8
Hole Diameter Lower (in.): 11-3/4
Surface Completion Type: Flush

Groundwater Levels BGS (ft):
At Time of Drilling: 478.00
At End of Drilling: Not Recorded
After Drilling: 476.30

Drillling Contractor: Cascade Drilling
Drilling Method: Air Rotary Casing Hammer
Logged By: T. Richards

Depth (ft)	Sample Type	Number	Headspace PID	Lithologic Log	Material Description	U.S.C.S.	Well Diagram	Remarks
510			31.3		Well-graded SAND with Gravel (SW); dark yellowish brown (10YR 4/4); wet; 80% fine to coarse sand; 20% fine gravel to 1"; subrounded to rounded. Note: gravel is granitic minerals and mafics.	SW	Top of 3" Schedule 80 PVC 0.020" Screen	Hammering. No water added.
515			2.4		@ 512 ft: Same as above (510 ft); yellowish brown (10YR 5/6); 60% fine to coarse sand; 40% fine to coarse gravel to 1.25".			Kelly down @ 1423, new 20' connection @ 1429. PID = 1.7 ppm @ top of casing and 0.2 ppm @ BZ.
520			1.7		Same as above (510 ft); yellowish brown (10YR 5/6); 60% fine to coarse sand; 40% fine to coarse gravel to 1.25".		Bottom of Screen	Hammering. PID = 0.8 ppm @ cyclone. No water added.
525			1.6		Same as above (510 ft); yellowish brown (10YR 5/6); 60% fine to coarse sand; 40% fine to coarse gravel to 1.25".		Sump Bottom of Sump	PID = 0.5 ppm @ cyclone.
530			1.4					PID = 0.1 ppm @ cyclone. Hammering, slow drilling.
535			0.7		Well-graded SAND (SW); dark yellowish brown (10YR 4/6); wet; 90% fine to coarse sand; 10% fine gravel to 3/4"; rounded. Note: gravel is granitic minerals and mafics.		Bottom of 16/30 Filter Pack Native Backfill	Kelly down @ 1530, new 20' connection @ 1535. PID = 0.2 ppm @ cyclone, 0.3 ppm @ top
540								

BOREHOLE_LOG - CB&I_DRILLING.GDT - 5/8/17 10:41 - Z:\KAFB RAPID\GINT\KAFB_RAPID_11-1-2016.GPJ

Borehole ID: KAFB-106MW1

Client: US Army Corps of Engineers
Project Location: KAFB, Albuquerque, NM
Project Name: KAFB RAPID SWMU ST-106/SS-111
Project Number: 500433

Date Started: 1/8/2017
Date TD Reached: 1/12/2017
Date Completed: 3/24/2017

Ground Elevation AMSL (ft): Not Recorded
Y Coordinate:
X Coordinate:

Hole Diameter Upper (in.): 13-3/8
Hole Diameter Lower (in.): 11-3/4
Surface Completion Type: Flush

Groundwater Levels BGS (ft):
At Time of Drilling: 478.00
At End of Drilling: Not Recorded
After Drilling: 476.30

Drillling Contractor: Cascade Drilling
Drilling Method: Air Rotary Casing Hammer
Logged By: T. Richards

Depth (ft)	Sample Type	Number	Headspace PID	Lithologic Log	Material Description	U.S.C.S.	Well Diagram	Remarks
540								
			1.0		Well-graded SAND (SW); dark yellowish brown (10YR 4/6); wet; 90% fine to coarse sand; 10% fine gravel to 3/4"; rounded. Note: gravel is granitic minerals and mafics.			of casing, and 0.1 ppm @ BZ. PID = 0.4 ppm @ cyclone and 0.1 ppm @ BZ.
545					Same as above (540 ft).			
			0.4				Native Backfill	PID = 0.3 ppm @ cyclone and 0.1 ppm @ BZ.
550					Same as above (540 ft).	SW		Hammering, slow drilling.
			0.3					PID = 0.2 ppm @ cyclone and 0.1 ppm @ BZ.
555								
			0.2				Bottom of Rat Hole	PID = 0.1 ppm @ cyclone and BZ. Total Depth = 558 feet bgs. Reached total depth @ 1638 on 1/12/17.
560								
565								
570								

BOREHOLE_LOG - CB&I_DRILLING.GDT - 5/8/17 10:41 - Z:\KAFB RAPID\GINT\KAFB_RAPID_11-1-2016.GPJ

Well Development Record

Project Name: RAPID ESTCP
Location: KAFB
Personnel: Crystal Hardee + Chris Scott
Date: 3/26/17

Well/Piez. No.: KAFB-106MW1-S
Date Installed:
Csg. Diameter (I.D.): 4"
Total Depth (ft. BGL): 500.5

X Original Development
X Bailing
☐ Redevelopment
X Pumping
☐ Other

Development Date: 3/26/17 - 3/28/17
Depth to Water Before Developing Well (ft. BGL): 475.7

Vol. (V) Purge Factor Volume to Purge

Height of Water Column: 25 feet = gal. * 1 =

$V=(B * r_c^2 * L_c * 7.48)+(B * (r_w^2 - r_c^2) * L_s * \emptyset_s * 7.48)+(H_2O$ added during drilling/installation$)$ = 36 gallons

Depth Purging From: 500-463 & 3/27
Time Purging Begins: 1605
Weather: Sunny warm 3/26 Raining 3/28
Screened Interval (ft BGL): 463-498
Equipment Nos.: pH Meter: 106407 EC Meter: 106407 Turbidity Meter: 6203

Equipment Decontaminated Prior to Development: Y X N
Describe: Steam Cleaned
Collected Sample of Water Added to Well: Y N X
Describe: N/A
Comment:

Date	Time	Water Level (ft. Below TOC)	Volume Removed (gal.)	Temp.°C	pH	EC (ms/cm)	Turbidity N.T.U.	Comments
3/26	1605	475.7	0	NR	NR	NR	NR	Begin bailing - strong odor
	1720	NR	45	NR	NR	NR	NR	done bailing for day
3/27	0735	NR	45	NR	→	→	→	begin bailing 3/27
↓	0835	NR	90	NR	→	→	→	continue bailing - still removing sand
	0866	NR	95	NR	→	→	→	switching to swab
	0920	NR	95	NR	→	→	→	switching to baller
	1024	NR	140	NR	→	→	→	bailing
✓	1230	NR	185	NR	→	→	→	stop for lunch

Notes:
* Water Levels - Reported to the nearest 0.01 foot
* pH - Reading rounded to 0.1 pH units
* Water temperature - Reported to nearest 0.1C
* Turbidity report in NTV nearest whole #
GPM = Gallons Per Minute

Where:
B=3.14
$\emptyset_s$= porosity of the sand pack
r_c= radius of the well casing and screen in feet
L_c= length of water column inside the casing and screen in feet
r_w= radius of the well bore in feet
L_s= length of saturated portion of the sand pack in feet
7.48 gallons/cubic foot= conversion from cubic feet to gallons

Well Development Record

Project: KAFB ESTCP

Project Number: 500433

Date: 3/28/17

Time Start:

Well No: KAFB-106MW1-S

Samplers: Crystal Hardee

Checked By:

Time Finish:

Field Chemistry (cont'd)

Date	Time	Water Level (ft. Below TOC)	Volume Removed (gal.)	Temp.°C	pH	EC (ms/cm)	Turbidity N.T.U.	Comments
3/27	1300	NR	185	NR				begins to scoab - ↑ sand content
	1439	NR	230	NR				
	1713	NR	240	NR				Pump tripped in - Ready for AM
3/28	0740	NR	240	NR				
	0746	NR	240	17.6	8.15	0.608	24.4	Pump intake @ 423' - Pump on
	0756	NR	276	19.3	7.48	0.623	7.66	
	0807	NR	312	19.0	7.45	0.617	2.52	
	0817	NR	348	18.8	7.44	0.627	1.92	
	0827	NR	384	18.9	7.46	0.623	1.7	
	0836		414	19.0	7.5	0.625	1.42	Pump off
	0848	NR	414	NR				pump on
	0858	NR	450	19.7	7.33	0.647	3.99	
	0908	NR	486	19.8	7.41	0.648	2.45	
	0920	NR	522	19.4	7.41	0.640	1.26	Development done
							+.cto	

first Reading

~35 gpm

3.8 gpm

Was well sampled after development? YES NO X

* Switched back to bailing @ 1340

Sample Method: N/A

Sample Name: N/A

Analyses: N/A

Well Development Record

Project Name: RAPID ESTCP
Location: KAFB
Personnel: Crystal Hardee + Chris Scott
Date: 3/25/17 - 3/26/17

Well/Piez. No.: KAFB-106MW1I
Date Installed: 1/19/17
Csg. Diameter (I.D.): 3"
Total Depth (ft. BGL): 528

X Original Development | X Bailing | X Pumping
☐ Redevelopment | ☐ Other

Development Date: 3/25/17 - ~~X~~ 3/26/17
Depth to Water Before Developing Well (ft. BGL): 475.7' below top of casing

Vol. (V) Purge Factor Volume to Purge

Height of Water Column: ~~70.4~~ 52.3' feet = gal. * 1 =

V=(B * r_c^2 * L_c * 7.48)+(B * (r_w^2 - r_c^2) * L_s * $Ø_s$ * 7.48)+(H_2O added during drilling/installation) = 70.4+ gallons

Depth Purging From: 528-515
Time Purging Begins: 1224
Weather: warm, slight breeze
Screened Interval (ft BGL): 513 - 523
Equipment Nos.: pH Meter: 106407 EC Meter: 106407 Turbidity Meter: 0203

Equipment Decontaminated Prior to Development: Y X N
Describe: Steam Cleaned
Collected Sample of Water Added to Well: Y N X
Describe: N/A
Comment:

Date	Time	Water Level (ft. Below TOC)	Volume Removed (gal.)	Temp.°C	pH	EC (ms/cm)	Turbidity N.T.U.	Comments
3/25	1224	~~475.7~~	0	NR	NR	NR	NR	begin bailing - well silty + cloudy
	1330	NR	15	NR				switch to surging - switched to 15' ss bailer
	1405	NR	15	NR				start swabbing
	1450	NR	15	NR				start bailing
	1700	NR	40	NR				prepare for pumping tomorrow
3/26	1120		40	NR				start pump Intake @ 515
	1140		60	20.6	7.83	.402	>1000	water is clear
	1155		97.5	21.0	7.89	.400	13.8	

pump @ 2.5 GPM

Notes:
* Water Levels - Reported to the nearest 0.01 foot
* pH - Reading rounded to 0.1 pH units
* Water temperature - Reported to nearest 0.1C
* Turbidity report in NTV nearest whole #
GPM = Gallons Per Minute

Where:
B=3.14
$Ø_s$= porosity of the sand pack
r_c= radius of the well casing and screen in feet
L_c= length of water column inside the casing and screen in feet
r_w= radius of the well bore in feet
L_s= length of saturated portion of the sand pack in feet
7.48 gallons/cubic foot= conversion from cubic feet to gallons

Well Development Record

Project: KAFB ESTCP

Project Number: 500433

Date: 3/26/17

Time Start:

Well No: KAFB-100MW1-I

Samplers: Crystal Hardee

Checked By:

Time Finish:

Field Chemistry (cont'd)

Date	Time	Water Level (ft. Below TOC)	Volume Removed (gal.)	Temp.°C	pH	EC (ms/cm)	Turbidity N.T.U.	Comments
	1210	NR	135	21.0	7.74	0.393	4.26	
	1215		146	NR				Shut pump off - surge
	1225		146	NR				~2.76 gpm
	1240		187.4	21.8	7.85	0.396	76.1	
	1250		215	21.1	7.77	0.401	17.4	
	1252		225	NR				surge
	1311		253	21.7	7.77	0.403	45.7	~2.8 / 3.0 gpm
	1315		267	21.6	7.77	0.402	39.8	surge
	1325		284	21.5	7.76	0.404	35.8	
	1340		322	21.4	7.77	0.403	32.9	
	1345		336	21.8	7.78	0.400	17.7	
	1350		350	21.3	7.80	0.398	15.9	
	1355		385	20.8	7.80	0.399	8.84	
	1400		435	20.9	7.81	0.399	5.29	
	1415		~470	21.0	7.80	0.400	4.09	Development complete

Was well sampled after development? YES ___ NO X

Sample Method: N/A

Sample Name: N/A

Analyses: N/A

Monitoring Well Completion Diagram KAFB-106MW2

Installation Start Date/Time: 1/31/17@1420
Installation End Date/Time: 2/16/17@1140
Completion Date: 3/24/17

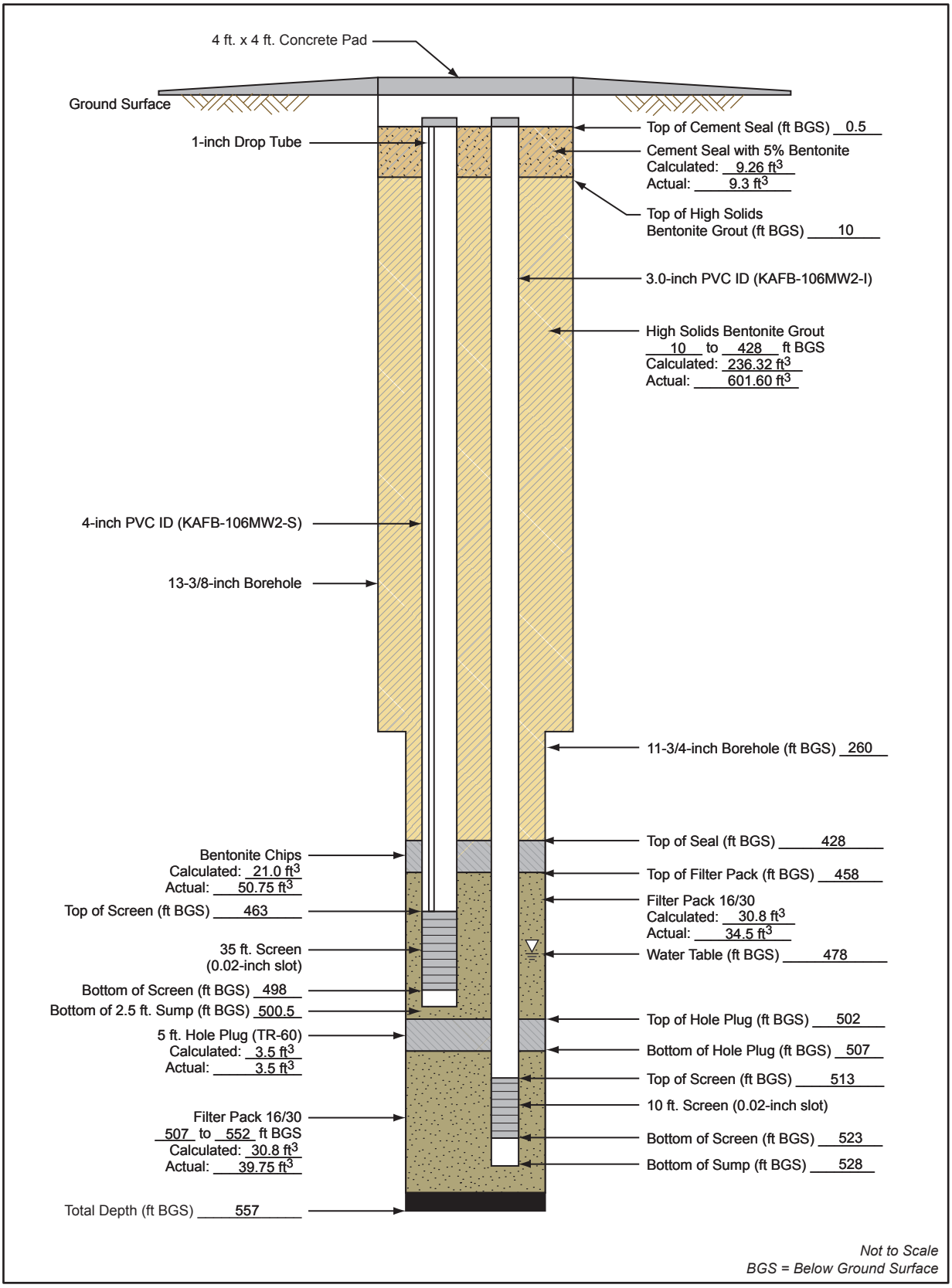

Not to Scale
BGS = Below Ground Surface

500433_03050100_A9

Borehole ID: KAFB-106MW2

Client: US Army Corps of Engineers
Project Location: KAFB, Albuquerque, NM
Project Name: KAFB RAPID SWMU ST-106/SS-111
Project Number: 500433

Date Started: 1/31/2017
Date TD Reached: 2/16/2017
Date Completed: 3/24/2017

Ground Elevation AMSL (ft): Not Recorded
Y Coordinate:
X Coordinate:

Hole Diameter Upper (in.): 13-3/8
Hole Diameter Lower (in.): 11-3/4
Surface Completion Type: Flush

Groundwater Levels BGS (ft):
At Time of Drilling: 478.00
At End of Drilling: Not Recorded
After Drilling: 476.00

Drillling Contractor: Cascade Drilling
Drilling Method: Air Rotary Casing Hammer
Logged By: T. Richards

Depth (ft)	Sample Type	Number	Headspace PID	Lithologic Log	Material Description	U.S.C.S.	Well Diagram	Remarks
0					No Lithologic Description.		Top of Casing/Top of Cement Seal	Borehole was pot holed with water knife to 5 feet bgs. No cuttings returned.
5					SILT with Gravel (ML); yellowish red (5YR 4/6); dry; 80% silt; 20% fine gravel to 3/4"; subangular to rounded; trace coarse sand. Note: gravel is mafics and granitic minerals.	ML		Begin drilling with 13-3/8 casing @ 1420 on 1/31/17. Driller is using drill rod assembly with roller stabilizer and 2 drill collars.
10					Same as above (5 ft).			No hammering. No water added downhole.
15					Same as above (5 ft); gravel to 1.25".		Portland Cement with Bentonite	
20					Gravelly SILT (ML); light reddish brown (5YR 6/4); dry; 60% silt; 30% fine to coarse gravel to 1.5"; angular to subrounded; 10% coarse sand; angular to rounded. Note: rock fragments to 1/4"; angular.			Kelly down @ 1433, new 20' connected @ 1445.
25					Sandy SILT (ML); yellowish red (5YR 4/6); dry; 70% silt; trace clay; 30% fine to coarse sand. Note: greater percentage of coarse sand present.			PID = 0.0 ppm @ breathing zone (BZ) and cyclone.
30					Gravelly SILT (ML); light reddish brown (5YR 6/4); dry; 60% silt; trace clay; 40% fine gravel to 3/4"; angular to			No hammering. No water added downhole. Intermittent hammering.

BOREHOLE_LOG - CB&I_DRILLING.GDT - 5/9/17 16:32 - Z:\KAFB RAPID\GINT\KAFB_RAPID_11-1-2016.GPJ

Borehole ID: KAFB-106MW2

Client: US Army Corps of Engineers
Project Location: KAFB, Albuquerque, NM
Project Name: KAFB RAPID SWMU ST-106/SS-111
Project Number: 500433

Date Started: 1/31/2017
Date TD Reached: 2/16/2017
Date Completed: 3/24/2017

Ground Elevation AMSL (ft): Not Recorded
Y Coordinate:
X Coordinate:

Hole Diameter Upper (in.): 13-3/8
Hole Diameter Lower (in.): 11-3/4
Surface Completion Type: Flush

Groundwater Levels BGS (ft):
At Time of Drilling: 478.00
At End of Drilling: Not Recorded
After Drilling: 476.00

Drillling Contractor: Cascade Drilling
Drilling Method: Air Rotary Casing Hammer
Logged By: T. Richards

Depth (ft)	Sample Type	Number	Headspace PID	Lithologic Log	Material Description	U.S.C.S.	Well Diagram	Remarks
30					subrounded; trace medium to coarse sand.			
					Gravelly SILT (ML); light reddish brown (5YR 6/4); dry; 60% silt; trace clay; 40% fine gravel to 3/4"; angular to subrounded; trace medium to coarse sand.			
35						ML		Some hammering.
					Same as above (30 ft).			Kelly down @ 1508, new 20' connection @ 1625.
40							Top of High Solids Bentonite Grout	
					Sandy lean CLAY (CL); light brown (7.5YR 6/3); 70% clay; 30% fine sand; trace fine gravel to 1/4"; angular. Note: gravel is coated with clay.	CL		PID = 0.0 ppm @ BZ and cyclone.
45								Hammering. No water added downhole.
					Gravelly SILT (ML); reddish brown (5YR 5/4); dry; 60% silt; trace clay; 40% fine gravel to 1/4"; rounded; trace fine sand. Note: gravel is coated with clay.			
50								
					Same as above (46 ft).	ML		
55								
					Same as above (46 ft).			Kelly down @ 1700. End of 1/31/17. Resume drilling @ 1424 on 2/2/17 with a button bit and
60					Description on next page.			

BOREHOLE_LOG - CB&I_DRILLING.GDT - 5/9/17 16:32 - Z:\KAFB RAPID\GINT\KAFB_RAPID_11-1-2016.GPJ

Borehole ID: KAFB-106MW2

Client: US Army Corps of Engineers
Project Location: KAFB, Albuquerque, NM
Project Name: KAFB RAPID SWMU ST-106/SS-111
Project Number: 500433

Date Started: 1/31/2017
Date TD Reached: 2/16/2017
Date Completed: 3/24/2017

Ground Elevation AMSL (ft): Not Recorded
Y Coordinate:
X Coordinate:

Hole Diameter Upper (in.): 13-3/8
Hole Diameter Lower (in.): 11-3/4
Surface Completion Type: Flush

Groundwater Levels BGS (ft):
At Time of Drilling: 478.00
At End of Drilling: Not Recorded
After Drilling: 476.00

Drillling Contractor: Cascade Drilling
Drilling Method: Air Rotary Casing Hammer
Logged By: T. Richards

Depth (ft)	Sample Type	Number	Headspace PID	Lithologic Log	Material Description	U.S.C.S.	Well Diagram	Remarks
60					SILT with Sand (ML); reddish yellow (7.5YR 6/6); dry; 75% silt; trace clay; 25% fine to coarse sand; angular to rounded. Note: fragmented gravels.	ML		downhole hammer. Cuttings biased fine with current drill assembly.
65					Same as above (60 ft).			PID = 0.1 ppm @ cyclone and 0.0 ppm @ BZ.
70					Same as above (60 ft).			Downhole hammering. No water added downhole.
75					Same as above (60 ft).		High Solids Bentonite Grout	Kelly down @ 1436, new 20' connection @ 1445.
80					Same as above (60 ft).			PID = 0.1 ppm @ cyclone and 0.0 ppm @ BZ. Downhole hammering. No water added downhole.
85					Sandy lean CLAY (CL); yellowish red (5YR 5/6); dry to slightly moist; 70% clay; 25% fine to medium sand; 5% gravel fragments.	CL		Hammering downhole and with casing hammer.
90								

BOREHOLE_LOG - CB&I_DRILLING.GDT - 5/9/17 16:32 - Z:\KAFB RAPID\GINT\KAFB_RAPID_11-1-2016.GPJ

Borehole ID: KAFB-106MW2

Client: US Army Corps of Engineers
Project Location: KAFB, Albuquerque, NM
Project Name: KAFB RAPID SWMU ST-106/SS-111
Project Number: 500433

Date Started: 1/31/2017
Date TD Reached: 2/16/2017
Date Completed: 3/24/2017

Ground Elevation AMSL (ft): Not Recorded
Y Coordinate:
X Coordinate:

Hole Diameter Upper (in.): 13-3/8
Hole Diameter Lower (in.): 11-3/4
Surface Completion Type: Flush

Groundwater Levels BGS (ft):
At Time of Drilling: 478.00
At End of Drilling: Not Recorded
After Drilling: 476.00

Drillling Contractor: Cascade Drilling
Drilling Method: Air Rotary Casing Hammer
Logged By: T. Richards

Depth (ft)	Sample Type	Number	Headspace PID	Lithologic Log	Material Description	U.S.C.S.	Well Diagram	Remarks
90					Sandy lean CLAY (CL); yellowish red (5YR 5/6); dry to slightly moist; 70% clay; 25% fine to medium sand; 5% gravel fragments.	CL		Hammering downhole. No water added downhole.
95					Same as above (90 ft).	CL		
100					Same as above (90 ft).	CL		Kelly down @ 1524, new 20' connection. End of 2/2/17. Resume drilling @ 0735 on 2/3/17. PID = 0.2 ppm @ cyclone and 0.0 ppm @ BZ.
105					Same as above (90 ft).	CL	High Solids Bentonite Grout	
110					Sandy SILT with Gravel (ML); pink (5YR 7/4); dry; 40% silt and clay; 40% fine to medium sand; 20% gravel fragments; angular.	ML		
115					Same as above (110 ft).	ML		Kelly down @ 0757, new 20' connection @ 0910. PID = 0.3 ppm @ cyclone and 0.1 ppm @ BZ.
120					Lean CLAY with Sand (CL); light reddish brown (5YR 6/4); dry to slightly moist; 80% clay; 20% fine to medium sand.	CL		

BOREHOLE_LOG - CB&I_DRILLING.GDT - 5/9/17 16:32 - Z:\KAFB RAPID\GINT\KAFB_RAPID_11-1-2016.GPJ

Borehole ID: KAFB-106MW2

Client: US Army Corps of Engineers
Project Location: KAFB, Albuquerque, NM
Project Name: KAFB RAPID SWMU ST-106/SS-111
Project Number: 500433

Date Started: 1/31/2017
Date TD Reached: 2/16/2017
Date Completed: 3/24/2017

Ground Elevation AMSL (ft): Not Recorded
Y Coordinate:
X Coordinate:

Hole Diameter Upper (in.): 13-3/8
Hole Diameter Lower (in.): 11-3/4
Surface Completion Type: Flush

Groundwater Levels BGS (ft):
At Time of Drilling: 478.00
At End of Drilling: Not Recorded
After Drilling: 476.00

Drillling Contractor: Cascade Drilling
Drilling Method: Air Rotary Casing Hammer
Logged By: T. Richards

Depth (ft)	Sample Type	Number	Headspace PID	Lithologic Log	Material Description	U.S.C.S.	Well Diagram	Remarks
120					Lean CLAY with Sand (CL); light reddish brown (5YR 6/4); dry to slightly moist; 80% clay; 20% fine to medium sand. Note: gravel fragments.	CL		Hammering downhole and with casing hammer. No water added downhole.
125					Same as above (120 ft).			
130					Same as above (120 ft).			
135					Well-graded SAND with Gravel (SW); reddish brown (5YR 5/3); dry; 80% fine to coarse sand; 20% gravel fragments; angular.	SW	High Solids Bentonite Grout	Continuous hammering.
140					Same as above (132 ft).			Kelly down @ 0946, new 20' connection @ 1000.
145					Sandy lean CLAY (CL); reddish yellow (5YR 6/8); slightly moist; low plasticity; 60% clay; 40% fine sand. Note: gravel fragments.	CL		Continuous hammering.
150					Same as above (141 ft).			

BOREHOLE_LOG - CB&I_DRILLING.GDT - 5/9/17 16:32 - Z:\KAFB RAPID\GINT\KAFB_RAPID_11-1-2016.GPJ

Borehole ID: KAFB-106MW2

Client: US Army Corps of Engineers
Project Location: KAFB, Albuquerque, NM
Project Name: KAFB RAPID SWMU ST-106/SS-111
Project Number: 500433

Date Started: 1/31/2017
Date TD Reached: 2/16/2017
Date Completed: 3/24/2017

Ground Elevation AMSL (ft): Not Recorded
Y Coordinate:
X Coordinate:

Hole Diameter Upper (in.): 13-3/8
Hole Diameter Lower (in.): 11-3/4
Surface Completion Type: Flush

Groundwater Levels BGS (ft):
At Time of Drilling: 478.00
At End of Drilling: Not Recorded
After Drilling: 476.00

Drillling Contractor: Cascade Drilling
Drilling Method: Air Rotary Casing Hammer
Logged By: T. Richards

Depth (ft)	Sample Type	Number	Headspace PID	Lithologic Log	Material Description	U.S.C.S.	Well Diagram	Remarks
150					Sandy lean CLAY (CL); reddish yellow (5YR 6/8); slightly moist; low plasticity; 60% clay; 40% fine sand. Note: gravel fragments.	CL		
155					Well-graded SAND (SW); reddish yellow (5YR 6/6); dry; 95% fine to coarse sand; 5% silt. Note: gravel fragments present and higher percentage of fine sand.	SW		Kelly down @ 1023. Trip out drill rod to conduct repairs. End of 2/3/17. Resume drilling @ 0817 on 2/4/17.
160					Same as above (155 ft).			Stop drilling @ 0840 due to rig repairs. Resume drilling @ 0944 on 2/7/17.
165							High Solids Bentonite Grout	
170					Same as above (155 ft); light brown (7.5YR 6/4); dry to slightly moist; 100% fine to coarse sand.			Hammering downhole and with casing hammer. No water added downhole.
175					Same as above (155 ft); light brown (7.5YR 6/4); dry to slightly moist; 100% fine to coarse sand.			
180					Same as above (155 ft); light brown (7.5YR 6/4); dry to slightly moist; 100% fine to coarse sand.			Kelly down @ 0954, new 20' connection.

BOREHOLE_LOG - CB&I_DRILLING.GDT - 5/9/17 16:32 - Z:\KAFB RAPID\GINT\KAFB_RAPID_11-1-2016.GPJ

Borehole ID: KAFB-106MW2

Client: US Army Corps of Engineers
Project Location: KAFB, Albuquerque, NM
Project Name: KAFB RAPID SWMU ST-106/SS-111
Project Number: 500433

Date Started: 1/31/2017
Date TD Reached: 2/16/2017
Date Completed: 3/24/2017

Ground Elevation AMSL (ft): Not Recorded
Y Coordinate:
X Coordinate:

Hole Diameter Upper (in.): 13-3/8
Hole Diameter Lower (in.): 11-3/4
Surface Completion Type: Flush

Groundwater Levels BGS (ft):
At Time of Drilling: 478.00
At End of Drilling: Not Recorded
After Drilling: 476.00

Drillling Contractor: Cascade Drilling
Drilling Method: Air Rotary Casing Hammer
Logged By: T. Richards

Depth (ft)	Sample Type	Number	Headspace PID	Lithologic Log	Material Description	U.S.C.S.	Well Diagram	Remarks
180					Well-graded SAND (SW); light brown (7.5YR 6/4); dry to slightly moist; 100% fine to coarse sand.			PID = 0.2 ppm @ cyclone and 0.1 ppm @ BZ. Hydraulic head failure, replace drill rig. Resume drilling @ 0812 on 2/9/17.
185					Well-graded SAND with Gravel (SW); light brown (7.5YR 6/4); moist; 85% fine to coarse sand; 15% fine gravel to 1/4"; subrounded to rounded. Note: gravel is mafics and quartz.			Continuous hammering. No water added downhole.
190					Same as above (185 ft).			
195					Same as above (185 ft).	SW	High Solids Bentonite Grout	Kelly down @ 0830, new 20' conneciton @ 0838.
200								PID = 0.1 ppm @ cyclone and BZ.
205					Same as above (185 ft); gravel to 3/4".			Continuous hammering.
210					Same as above (185 ft); gravel to 3/4".			

BOREHOLE_LOG - CB&I_DRILLING.GDT - 5/9/17 16:32 - Z:\KAFB RAPID\GINT\KAFB_RAPID_11-1-2016.GPJ

Borehole ID: KAFB-106MW2

Client: US Army Corps of Engineers
Project Location: KAFB, Albuquerque, NM
Project Name: KAFB RAPID SWMU ST-106/SS-111
Project Number: 500433

Date Started: 1/31/2017
Date TD Reached: 2/16/2017
Date Completed: 3/24/2017

Ground Elevation AMSL (ft): Not Recorded
Y Coordinate:
X Coordinate:

Hole Diameter Upper (in.): 13-3/8
Hole Diameter Lower (in.): 11-3/4
Surface Completion Type: Flush

Groundwater Levels BGS (ft):
At Time of Drilling: 478.00
At End of Drilling: Not Recorded
After Drilling: 476.00

Drillling Contractor: Cascade Drilling
Drilling Method: Air Rotary Casing Hammer
Logged By: T. Richards

Depth (ft)	Sample Type	Number	Headspace PID	Lithologic Log	Material Description	U.S.C.S.	Well Diagram	Remarks
210					Well-graded SAND with Gravel (SW); light brown (7.5YR 6/4); moist; 85% fine to coarse sand; 15% fine gravel to 3/4"; subrounded to rounded. Note: gravel is mafics and quartz.	SW		Continuous hammering.
215								
220					Same as above (210 ft); 80% fine to coarse sand; 20% gravel to 3/4"; angular to rounded.			Kelly down @ 0856, new 20' connection @ 0912. PID = 0.2 ppm @ cyclone and 0.1 ppm @ BZ.
225					Well-graded GRAVEL with Sand (GW); dark brown (7.5YR 3/3); 50% fine to caorse gravel to 1"; angular to rounded; 45% fine to coarse sand; 5% silt. Note: gravel is mafics and quartz.	GW	High Solids Bentonite Grout	
230					Well-graded SAND with Gravel (SW); brown (7.5YR 4/4); 75% fine to coarse sand; 25% fine to coarse gravel to 1"; subangular to rounded; trace fines. Note: gravel is mafics and granitic minerals.	SW		Hammering. No water added downhole.
235					Same as above (225 ft).			Kelly down @ 0946, new 20' connection @ 0952.
240								

BOREHOLE_LOG - CB&I_DRILLING.GDT - 5/9/17 16:32 - Z:\KAFB RAPID\GINT\KAFB_RAPID_11-1-2016.GPJ

Borehole ID: KAFB-106MW2

Client: US Army Corps of Engineers
Project Location: KAFB, Albuquerque, NM
Project Name: KAFB RAPID SWMU ST-106/SS-111
Project Number: 500433

Date Started: 1/31/2017
Date TD Reached: 2/16/2017
Date Completed: 3/24/2017

Ground Elevation AMSL (ft): Not Recorded
Y Coordinate:
X Coordinate:

Hole Diameter Upper (in.): 13-3/8
Hole Diameter Lower (in.): 11-3/4
Surface Completion Type: Flush

Groundwater Levels BGS (ft):
At Time of Drilling: 478.00
At End of Drilling: Not Recorded
After Drilling: 476.00

Drillling Contractor: Cascade Drilling
Drilling Method: Air Rotary Casing Hammer
Logged By: T. Richards

Depth (ft)	Sample Type	Number	Headspace PID	Lithologic Log	Material Description	U.S.C.S.	Well Diagram	Remarks
240								
245					Well-graded SAND with Gravel (SW); brown (7.5YR 4/4); 75% fine to coarse sand; 25% fine to coarse gravel to 1"; subangular to rounded; trace fines. Note: gravel is mafics and granitic minerals. @ 241 ft: gravel is more rounded.	SW		PID = 0.2 ppm @ cyclone and 0.1 ppm @ BZ. Hammering. Bit in drive shoe.
250								
255					Silty SAND with Gravel (SM); brown (7.5YR 5/3); 60% fine to medium sand; 20% fine gravel to 1/2"; subrounded to rounded; 20% silt.	SM		Hammering.
260					Sandy lean CLAY (CL); yellowish brown (10YR 5/4); low plasticity; 70% clay; 30% fine sand; trace fine gravel to 1/8"; rounded.	CL	High Solids Bentonite Grout	Kelly down @ 1038, new 5' connection @ 1047. Water added at cyclone for dust suppression. Trip out drill bit to survey borehole and trip in 11-3/4" casing. End of 2/9/17. Resume drilling @ 1042 on 2/14/17. PID = 0.2 ppm @ cyclone and 0.1 ppm @ BZ. Driller using rod assembly with under reaming bit and downhole hammer.
					Same as above (255 ft).			
265					Same as above (255 ft).			
270								

BOREHOLE_LOG - CB&I_DRILLING.GDT - 5/9/17 16:32 - Z:\KAFB RAPID\GINT\KAFB_RAPID_11-1-2016.GPJ

Borehole ID: KAFB-106MW2

Client: US Army Corps of Engineers
Project Location: KAFB, Albuquerque, NM
Project Name: KAFB RAPID SWMU ST-106/SS-111
Project Number: 500433

Date Started: 1/31/2017
Date TD Reached: 2/16/2017
Date Completed: 3/24/2017

Ground Elevation AMSL (ft): Not Recorded
Y Coordinate:
X Coordinate:

Hole Diameter Upper (in.): 13-3/8
Hole Diameter Lower (in.): 11-3/4
Surface Completion Type: Flush

Groundwater Levels BGS (ft):
At Time of Drilling: 478.00
At End of Drilling: Not Recorded
After Drilling: 476.00

Drillling Contractor: Cascade Drilling
Drilling Method: Air Rotary Casing Hammer
Logged By: T. Richards

Depth (ft)	Sample Type	Number	Headspace PID	Lithologic Log	Material Description	U.S.C.S.	Well Diagram	Remarks
270					Sandy lean CLAY (CL); yellowish brown (10YR 5/4); low plasticity; 70% clay; 30% fine sand; trace fine gravel to 1/8"; rounded.	CL		Hammering downhole. No water added downhole.
275					Poorly graded SAND (SP); light brown (7.5YR 6/4); 100% fine sand; trace medium and coarse sand; trace fine gravel.	SP		Kelly down @ 1053, new 20' connection @ 1400. Water added @ cyclone.
280					Same as above (276 ft).	SP		PID = 0.1 ppm @ cyclone and BZ.
285						SP	High Solids Bentonite Grout	Hammering downhole.
290					Clayey SAND with Gravel (SC); brown (7.5YR 5/4); 60% fine to medium sand; trace coarse sand; 15% fine gravel to 1/4"; subrounded to rounded; 25% clay. Note: clay is slightly plastic.	SC		Intermittent hammering of casing.
295					Well-graded SAND with Gravel (SW); light brown (7.5YR 6/4); 80% fine to coarse sand; 20% gravel fragments.	SW		Kelly down @ 1415, new 20' connection @ 1421.
300								

BOREHOLE_LOG - CB&I_DRILLING.GDT - 5/9/17 16:32 - Z:\KAFB RAPID\GINT\KAFB_RAPID_11-1-2016.GPJ

Borehole ID: KAFB-106MW2

Client: US Army Corps of Engineers
Project Location: KAFB, Albuquerque, NM
Project Name: KAFB RAPID SWMU ST-106/SS-111
Project Number: 500433

Date Started: 1/31/2017
Date TD Reached: 2/16/2017
Date Completed: 3/24/2017

Ground Elevation AMSL (ft): Not Recorded
Y Coordinate:
X Coordinate:

Hole Diameter Upper (in.): 13-3/8
Hole Diameter Lower (in.): 11-3/4
Surface Completion Type: Flush

Groundwater Levels BGS (ft):
At Time of Drilling: 478.00
At End of Drilling: Not Recorded
After Drilling: 476.00

Drillling Contractor: Cascade Drilling
Drilling Method: Air Rotary Casing Hammer
Logged By: T. Richards

Depth (ft)	Sample Type	Number	Headspace PID	Lithologic Log	Material Description	U.S.C.S.	Well Diagram	Remarks
300					Well-graded SAND with Gravel (SW); light brown (7.5YR 6/4); 80% fine to coarse sand; 20% gravel fragments.	SW	High Solids Bentonite Grout	PID = 0.1 ppm @ cyclone and BZ. Hammering downhole and with casing hammer. No water added downhole.
305					Same as above (300 ft).			
310					Same as above (300 ft).			
315					Same as above (300 ft).			Kelly down @ 1438, new 20' connection @ 1443.
320					Sandy lean CLAY with Gravel (CL); brown (10YR 4/3); 70% clay; 15% fine to medium sand; trace coarse sand; 15% fine gravel to 1/8"; subrounded to rounded.	CL		PID = 0.2 ppm @ cyclone and 0.1 ppm @ BZ. Hammering downhole and with casing hammer.
325					Well-graded SAND with Gravel (SW); brown (7.5YR 4/4); 70% fine to coarse sand; 30% fine gravel to 1/8". Note: gravel fragments to 1/2".	SW		
330								

BOREHOLE_LOG - CB&I_DRILLING.GDT - 5/9/17 16:32 - Z:\KAFB RAPID\GINT\KAFB_RAPID_11-1-2016.GPJ

Borehole ID: KAFB-106MW2

Client: US Army Corps of Engineers
Project Location: KAFB, Albuquerque, NM
Project Name: KAFB RAPID SWMU ST-106/SS-111
Project Number: 500433

Date Started: 1/31/2017
Date TD Reached: 2/16/2017
Date Completed: 3/24/2017

Ground Elevation AMSL (ft): Not Recorded
Y Coordinate:
X Coordinate:

Hole Diameter Upper (in.): 13-3/8
Hole Diameter Lower (in.): 11-3/4
Surface Completion Type: Flush

Groundwater Levels BGS (ft):
At Time of Drilling: 478.00
At End of Drilling: Not Recorded
After Drilling: 476.00

Drillling Contractor: Cascade Drilling
Drilling Method: Air Rotary Casing Hammer
Logged By: T. Richards

Depth (ft)	Sample Type	Number	Headspace PID	Lithologic Log	Material Description	U.S.C.S.	Well Diagram	Remarks
330					Well-graded SAND with Gravel (SW); brown (7.5YR 4/4); 70% fine to coarse sand; 30% fine gravel to 1/8". Note: gravel fragments to 1/2".	SW		Hammering downhole and with casing hammer.
335					Same as above (330 ft).			Kelly down @ 1516, new 20' connection @ 1523.
340					Same as above (330 ft).			PID = 0.2 ppm @ cyclone and 0.1 ppm @ BZ.
345							High Solids Bentonite Grout	
350					SILT (ML); light brown (7.5YR 6/4); 90% silt; 5% fine sand; 5% fine gravel to 1/4".	ML		No downhole hammering; using casing hammer intermittently.
355					Same as above (347 ft).			
360					Same as above (347 ft).			Kelly down @ 1535. End of 2/14/17. Resume drilling @ 0934 on 2/15/17.

BOREHOLE_LOG - CB&I_DRILLING.GDT - 5/9/17 16:32 - Z:\KAFB RAPID\GINT\KAFB_RAPID_11-1-2016.GPJ

Borehole ID: KAFB-106MW2

Client: US Army Corps of Engineers
Project Location: KAFB, Albuquerque, NM
Project Name: KAFB RAPID SWMU ST-106/SS-111
Project Number: 500433

Date Started: 1/31/2017
Date TD Reached: 2/16/2017
Date Completed: 3/24/2017

Ground Elevation AMSL (ft): Not Recorded
Y Coordinate:
X Coordinate:

Hole Diameter Upper (in.): 13-3/8
Hole Diameter Lower (in.): 11-3/4
Surface Completion Type: Flush

Groundwater Levels BGS (ft):
At Time of Drilling: 478.00
At End of Drilling: Not Recorded
After Drilling: 476.00

Drillling Contractor: Cascade Drilling
Drilling Method: Air Rotary Casing Hammer
Logged By: T. Richards

Depth (ft)	Sample Type	Number	Headspace PID	Lithologic Log	Material Description	U.S.C.S.	Well Diagram	Remarks
360					SILT (ML); light brown (7.5YR 6/4); 90% silt; 5% fine sand; 5% fine gravel to 1/4".	ML		Hammering downhole and with casing hammer. No water added downhole.
365					Well-graded SAND (SW); light brown (7.5YR 6/4); 90% fine to coarse sand; 10% fine gravel to 1/4"; trace silt. Note: gravel is mafics and quartz. Gravel fragments present.	SW		
370					Same as above (363 ft).			Coarse gravel @ 370 to 373 feet bgs.
375					Well-graded GRAVEL with Silt and Sand (GW-GM); pinkish gray (7.5YR 6/2); dry; 60% fine gravel to 1/4"; 30% fine to coarse sand; 10% silt. Note: gravel is mafics and quartz. Gravel fragments present.	GW-GM	High Solids Bentonite Grout	Kelly down @ 1020, new 20' connection @ 1127.
380					Same as above (375 ft).			PID = 0.2 ppm @ cyclone and 0.1 ppm @ BZ.
385					Well-graded SAND (SW); brown (7.5YR 5/4); 100% fine to coarse sand.	SW		Hammering downhole and with casing hammer.
390								

BOREHOLE_LOG - CB&I_DRILLING.GDT - 5/9/17 16:32 - Z:\KAFB RAPID\GINT\KAFB_RAPID_11-1-2016.GPJ

Borehole ID: KAFB-106MW2

Client: US Army Corps of Engineers
Project Location: KAFB, Albuquerque, NM
Project Name: KAFB RAPID SWMU ST-106/SS-111
Project Number: 500433

Date Started: 1/31/2017
Date TD Reached: 2/16/2017
Date Completed: 3/24/2017

Ground Elevation AMSL (ft): Not Recorded
Y Coordinate:
X Coordinate:

Hole Diameter Upper (in.): 13-3/8
Hole Diameter Lower (in.): 11-3/4
Surface Completion Type: Flush

Groundwater Levels BGS (ft):
At Time of Drilling: 478.00
At End of Drilling: Not Recorded
After Drilling: 476.00

Drillling Contractor: Cascade Drilling
Drilling Method: Air Rotary Casing Hammer
Logged By: T. Richards

Depth (ft)	Sample Type	Number	Headspace PID	Lithologic Log	Material Description	U.S.C.S.	Well Diagram	Remarks
390					Well-graded SAND (SW); brown (7.5YR 5/4); 100% fine to coarse sand.			Water added @ cyclone for dust suppression.
395					Well-graded SAND with Gravel (SW); brown (7.5YR 5/4); 70% fine to coarse sand; 30% fine gravel to 1/2"; subrounded to rounded; trace silt. Note: gravel fragments present.			Kelly down @ 1213, new 20' connection @ 1300.
400					Same as above (394 ft).			PID = 0.2 ppm @ cyclone and 0.1 ppm @ BZ.
405					Same as above (394 ft).	SW	High Solids Bentonite Grout	
410					Well-graded SAND (SW); light brown (7.5YR 6/3); dry; 90% fine to coarse sand; 5% fine gravel to 1/8"; 5% silt. Note: gravel fragments present.			Hammering downhole and with casing hammer. No water added downhole.
415					Same as above (408 ft).			Kelly down @ 1326, new 20' connection @ 1336.
420								

BOREHOLE_LOG - CB&I_DRILLING.GDT - 5/9/17 16:32 - Z:\KAFB RAPID\GINT\KAFB_RAPID_11-1-2016.GPJ

Borehole ID: KAFB-106MW2

Client: US Army Corps of Engineers
Project Location: KAFB, Albuquerque, NM
Project Name: KAFB RAPID SWMU ST-106/SS-111
Project Number: 500433

Date Started: 1/31/2017
Date TD Reached: 2/16/2017
Date Completed: 3/24/2017

Ground Elevation AMSL (ft): Not Recorded
Y Coordinate:
X Coordinate:

Hole Diameter Upper (in.): 13-3/8
Hole Diameter Lower (in.): 11-3/4
Surface Completion Type: Flush

Groundwater Levels BGS (ft):
At Time of Drilling: 478.00
At End of Drilling: Not Recorded
After Drilling: 476.00

Drillling Contractor: Cascade Drilling
Drilling Method: Air Rotary Casing Hammer
Logged By: T. Richards

Depth (ft)	Sample Type	Number	Headspace PID	Lithologic Log	Material Description	U.S.C.S.	Well Diagram	Remarks
420					Well-graded SAND (SW); light brown (7.5YR 6/3); dry; 90% fine to coarse sand; 5% fine gravel to 1/8"; 5% silt. Note: gravel fragments present.	SW	High Solids Bentonite Grout	PID = 0.2 ppm @ cyclone and 0.1 ppm @ BZ.
425					Same as above (420 ft).			Hammering downhole and with casing hammer. No water added downhole.
430					Same as above (420 ft).		Top of Bentonite Seal	
435					Same as above (420 ft).			Kelly down @ 1406, new 20' connection @ 1601.
440					Same as above (420 ft).		Bentonite Seal	PID = 0.2 ppm @ cyclone and 0.1 ppm @ BZ.
445					Same as above (420 ft).			Hammering downhole and with casing hammer.
450								

BOREHOLE_LOG - CB&I_DRILLING.GDT - 5/9/17 16:32 - Z:\KAFB RAPID\GINT\KAFB_RAPID_11-1-2016.GPJ

Borehole ID: KAFB-106MW2

Client: US Army Corps of Engineers
Project Location: KAFB, Albuquerque, NM
Project Name: KAFB RAPID SWMU ST-106/SS-111
Project Number: 500433

Date Started: 1/31/2017
Date TD Reached: 2/16/2017
Date Completed: 3/24/2017

Ground Elevation AMSL (ft): Not Recorded
Y Coordinate:
X Coordinate:

Hole Diameter Upper (in.): 13-3/8
Hole Diameter Lower (in.): 11-3/4
Surface Completion Type: Flush

Groundwater Levels BGS (ft):
At Time of Drilling: 478.00
At End of Drilling: Not Recorded
After Drilling: 476.00

Drillling Contractor: Cascade Drilling
Drilling Method: Air Rotary Casing Hammer
Logged By: T. Richards

Depth (ft)	Sample Type	Number	Headspace PID	Lithologic Log	Material Description	U.S.C.S.	Well Diagram	Remarks
450								
					Well-graded SAND with Gravel (SW); light brown (7.5YR 6/4); dry; 80% fine to coarse sand; 20% fine gravel to 1/4"; trace silt. Note: gravel fragments present.	SW	Bentonite Seal	
455								
					Poorly graded SAND (SP); yellowish brown (10YR 5/4); dry; 80% fine to medium sand; 10% fine gravel to 1/4"; 10% silt.		Top of 16/30 Sand	Kelly down @ 1650, new 20' connection @ 1700.
460								PID = 0.1 ppm @ cyclone and 0.0 ppm @ BZ.
							Top of 4" Schedule 80 PVC 0.020" Screen	
465			0.7		Same as above (457 ft).			
								Hammering.
						SP		
470			0.4		Same as above (457 ft); moist.			
475			2.0		Same as above (457 ft); wet.			Top of saturated cuttings @ 474 feet bgs. Water level is artifically high from drilling.
					Same as above (457 ft); wet. Note: strong fuel odor.			Kelly down @ 1733. End of 2/15/17. Resume drilling @ 0740 on 2/16/17.
480								

BOREHOLE_LOG - CB&I_DRILLING.GDT - 5/9/17 16:32 - Z:\KAFB RAPID\GINT\KAFB_RAPID_11-1-2016.GPJ

Borehole ID: KAFB-106MW2

Client: US Army Corps of Engineers
Project Location: KAFB, Albuquerque, NM
Project Name: KAFB RAPID SWMU ST-106/SS-111
Project Number: 500433

Date Started: 1/31/2017
Date TD Reached: 2/16/2017
Date Completed: 3/24/2017

Ground Elevation AMSL (ft): Not Recorded
Y Coordinate:
X Coordinate:

Hole Diameter Upper (in.): 13-3/8
Hole Diameter Lower (in.): 11-3/4
Surface Completion Type: Flush

Groundwater Levels BGS (ft):
At Time of Drilling: 478.00
At End of Drilling: Not Recorded
After Drilling: 476.00

Drillling Contractor: Cascade Drilling
Drilling Method: Air Rotary Casing Hammer
Logged By: T. Richards

Depth (ft)	Sample Type	Number	Headspace PID	Lithologic Log	Material Description	U.S.C.S.	Well Diagram	Remarks
480					Poorly graded SAND (SP); yellowish brown (10YR 5/4); wet; 80% fine to medium sand; 10% fine gravel to 1/4"; 10% silt.	SP		Static water level @ 478 feet bgs.
485			102.0		Same as above (480 ft).			Hammering downhole and with casing hammer.
								PID = 1135 ppm @ cyclone and 2.2 ppm @ BZ.
490			377.0		Same as above (480 ft).			Add approximately 25 gallons of clean water downhole to lift cuttings to surface.
								PID = 924 ppm @ cyclone and 1.8 ppm @ BZ.
495			185.0		Well-graded SAND with Gravel (SW); dark yellowish brown (10YR 4/4/); wet; 75% fine to coarse sand; 25% fine gravel to 1/2"; subangular to rounded. Note: gravel is mafics and quartz. Gravel fragments present.	SW		Kelly down @ 0843, new 20' connection @ 0856.
500			81.2		Same as above (494 ft).		Sump Top of TR-60 Plug	PID = 276 ppm @ cyclone and 4.6 ppm @ BZ.
								Hammering.
505			21.7		Same as above (494 ft).		Top of 16/30 Sand	PID = 63 ppm @ cyclone and 2.1 ppm @ BZ.
510								

BOREHOLE_LOG - CB&I_DRILLING.GDT - 5/9/17 16:32 - Z:\KAFB RAPID\GINT\KAFB_RAPID_11-1-2016.GPJ

Borehole ID: KAFB-106MW2

Client: US Army Corps of Engineers
Project Location: KAFB, Albuquerque, NM
Project Name: KAFB RAPID SWMU ST-106/SS-111
Project Number: 500433

Date Started: 1/31/2017
Date TD Reached: 2/16/2017
Date Completed: 3/24/2017

Ground Elevation AMSL (ft): Not Recorded
Y Coordinate:
X Coordinate:

Hole Diameter Upper (in.): 13-3/8
Hole Diameter Lower (in.): 11-3/4
Surface Completion Type: Flush

Groundwater Levels BGS (ft):
At Time of Drilling: 478.00
At End of Drilling: Not Recorded
After Drilling: 476.00

Drillling Contractor: Cascade Drilling
Drilling Method: Air Rotary Casing Hammer
Logged By: T. Richards

Depth (ft)	Sample Type	Number	Headspace PID	Lithologic Log	Material Description	U.S.C.S.	Well Diagram	Remarks
510					Well-graded SAND with Gravel (SW); dark yellowish brown (10YR 4/4/); wet; 75% fine to coarse sand; 25% fine gravel to 1/2"; subangular to rounded. Note: gravel is mafics and quartz. Gravel fragments present.		- Top of 3" Schedule 80 PVC 0.020" Screen	Poor cuttings return from 510 to 525 feet bgs. Add approximately 100 gallons of clean water downhole to lift cuttings to surface.
515			9.9		Same as above (510 ft).			PID = 21.2 ppm @ cyclone and 1.1 ppm @ BZ. Kelly down @ 0931, new 20' connection @ 0946.
520					Same as above (510 ft).			PID = 8.9 ppm @ cyclone and 1.0 ppm @ BZ.
525					Same as above (510 ft); dark yellowish brown (10YR 4/6); 80% fine to coarse sand; 20% fine gravel to 1/4"; rounded; trace silt.	SW	- Sump - Bottom of Sump	
530			2.7		Same as above (510 ft); dark yellowish brown (10YR 4/6); 80% fine to coarse sand; 20% fine gravel to 1/4"; rounded; trace silt.			PID = 7.1 ppm @ cyclone and 0.8 ppm @ BZ.
535			1.5		No Lithologic Description; limited cuttings returned. Cuttings appear to be Well-graded SAND (SW) with trace gravel to 1/4".	SW		Kelly down @ 1041, new 20' connection @ 1050.
540								

BOREHOLE_LOG - CB&I_DRILLING.GDT - 5/9/17 16:32 - Z:\KAFB RAPID\GINT\KAFB_RAPID_11-1-2016.GPJ

Borehole ID: KAFB-106MW2

Client: US Army Corps of Engineers
Project Location: KAFB, Albuquerque, NM
Project Name: KAFB RAPID SWMU ST-106/SS-111
Project Number: 500433

Date Started: 1/31/2017
Date TD Reached: 2/16/2017
Date Completed: 3/24/2017

Ground Elevation AMSL (ft): Not Recorded
Y Coordinate:
X Coordinate:

Hole Diameter Upper (in.): 13-3/8
Hole Diameter Lower (in.): 11-3/4
Surface Completion Type: Flush

Groundwater Levels BGS (ft):
At Time of Drilling: 478.00
At End of Drilling: Not Recorded
After Drilling: 476.00

Drillling Contractor: Cascade Drilling
Drilling Method: Air Rotary Casing Hammer
Logged By: T. Richards

Depth (ft)	Sample Type	Number	Headspace PID	Lithologic Log	Material Description	U.S.C.S.	Well Diagram	Remarks
540					No Lithologic Description; limited cuttings returned. Cuttings appear to be Well-graded SAND (SW) with trace gravel to 1/4".	SW		PID = 1.1 ppm @ cyclone and 0.5 ppm @ BZ. Hammering; very slow drilling.
545					Same as above (540 ft); No lithologic description.			PID = 10.1 ppm @ cyclone and 0.2 ppm @ BZ.
550					Same as above (540 ft); No lithologic description.		Bottom of 16/30 Sand	PID = 0.2 ppm @ cyclone and BZ.
555							Native Backfill	
							Bottom of Rat Hole	PID = 0.2 ppm @ cyclone and BZ. Total depth = 557 feet bgs. Reached total depth @ 1140 on 2/16/17.
560								
565								
570								

BOREHOLE_LOG - CB&I_DRILLING.GDT - 5/9/17 16:32 - Z:\KAFB RAPID\GINT\KAFB_RAPID_11-1-2016.GPJ

Well Development Record

Project Name: RAPID ESTCP
Location: KAFB
Personnel: Crystal Hardee & Chris Scott
Date: 3/29/2017

Well/Piez. No.: KAFB-1060MW02-S
Date Installed:
Csg. Diameter (I.D.): 4"
Total Depth (ft. BGL): 500.5

X Bailing X Pumping

X Original Development ☐Redevelopment ☐Other

Development Date: 3/29/17 - 3/30/17
Depth to Water Before Developing Well (ft. BGL): 476

Vol. (V) Purge Factor Volume to Purge

Height of Water Column: 24.3 feet = gal. * 1 =

$V=(B * r_c^2 * L_c * 7.48)+(B * (r_w^2 - r_c^2) * L_s * \emptyset_a * 7.48)+(H_2O$ added during drilling/installation) = 35 gallons

Depth Purging From: 500.5 - 480 Time Purging Begins: 1405
Weather: Screened Interval (ft BGL): 463-498
Equipment Nos.: pH Meter: 106407 EC Meter: 106407 Turbidity Meter: 0203

Equipment Decontaminated Prior to Development: Y X N
Describe: Steam Cleaned
Collected Sample of Water Added to Well: Y N X
Describe: N/A
Comment:

Date	Time	Water Level (ft. Below TOC)	Volume Removed (gal.)	Temp.°C	pH	EC (ms/cm)	Turbidity N.T.U.	Comments
3/29	1405	476	0	NR				swab
	1420	NR	0	NR				bail
	1500	~~3/60~~	30	NR				trip in pump
	1630	NR	30	NR				pipe tripped in
3/30	0730	NR	30	NR				Pump on ~3.9 GPM
	0740	NR	65	20.0	7.52	0.702	>1000	
	0748	NR	100	20.5	7.48	.712	652	
	0753	NR	110	NR				Pump off - surge

Notes:
* Water Levels - Reported to the nearest 0.01 foot
* pH - Reading rounded to 0.1 pH units
* Water temperature - Reported to nearest 0.1C
* Turbidity report in NTV nearest whole #
GPM = Gallons Per Minute

Where:
B=3.14
$\emptyset_a$= porosity of the sand pack
r_c= radius of the well casing and screen in feet
L_c= length of water column inside the casing and screen in feet
r_w= radius of the well bore in feet
L_s= length of saturated portion of the sand pack in feet
7.48 gallons/cubic foot= conversion from cubic feet to gallons

Well Development Record

Project: KAFB ESTCP

Project Number: 500433

Date:

Time Start:

Well No: KAFB 106 MW2S

Samplers: Crystal Handel

Checked By:

Time Finish:

Field Chemistry (cont'd)

Date	Time	Water Level (ft. Below TOC)	Volume Removed (gal.)	Temp.°C	pH	EC (ms/cm)	Turbidity N.T.U.	Comments
	0800	NR	110	NR	→	→	NR	Pump on
	0808	NR	145	20.9	7.58	.708	131	
	0816	NR	180	20.8	7.54	.710	15.8	
	0824	NR	215	20.4	7.55	.705	9.61	Pump off - surge
	0833	NR	215	NR	→	→	→	Pump on
	0841	NR	250	20.7	7.6	.706	20.6	
	0849	NR	285	20.4	7.54	0.701	6.48	
	0854	NR	309	NR	→	→	→	Pump off - surge
	0859	NR	309	NR	→	→	→	pump on last cycle
	0909	NR	344	20.8	7.61	0.704	20.8	
	0916	NR	379	20.8	7.54	0.699	10.1	
	0924	NR	414	20.7	7.51	0.697	6.91	
	0932	NR	449	20.3	7.50	0.698	4.74	Development complete

Was well sampled after development? YES ____ NO X

Sample Method: N/A

Sample Name: N/A

Analyses: N/A

Well Development Record

Project Name: RAPID ESTCP
Location: KAFB
Personnel: Crystal Hardee + Chris Scott
Date: 3/28/17

Well/Piez. No.: KAFB-106MW2-I
Date Installed: 2/20/17
Csg. Diameter (I.D.): 3"
Total Depth (ft. BGL): 528

X Original Development
X Bailing
X Pumping
☐ Redevelopment
☐ Other

Development Date 3/28/17 - 3/29/17
Depth to Water Before Developing Well (ft. BGL): 475.8

	Vol. (V)	Purge Factor	Volume to Purge
Height of Water Column: 52.2 feet	= 97.6 gal.	· 1	= 97.6

$V=(B * r_c^2 * L_c * 7.48)+(B * (r_w^2 - r_c^2) * L_s * \emptyset_s * 7.48)+(H_2O$ added during drilling/installation$)$ = 97.6 gallons

Depth Purging From: 528 - 515
Time Purging Begins: 1340
Weather: warm/cloudy - cool in AM
Screened Interval (ft BGL): 513 - 523
Equipment Nos.: pH Meter: 106407 EC Meter: 106407 Turbidity Meter: 0203

Equipment Decontaminated Prior to Development: Y X N
Describe: Steam Cleaned
Collected Sample of Water Added to Well: Y N X
Describe: N/A
Comment:

Date	Time	Water Level (ft. Below TOC)	Volume Removed (gal.)	Temp.°C	pH	EC (ms/cm)	Turbidity N.T.U.	Comments
3/28	1340	475.8	0	NR			→	Steam / Bailing
↓	1523	NR	~~475.8~~	NR			→	bailing
	1625	NR	15	NR			→	trip in pump
3/29	0753		15	NR			→	Pumping / Pump on
	0758	NR	15	17.2	7.46		>1000	
	0817	NR	95	20.3	7.90	.309	33.9	Pump off - surging
	0839	NR	95	NR			→	Pump on
↓	0910	NR	192	20.7	7.77	.363	35.1	

3.8 gpm

Pumping @ ~6 to 7 gpm

0912 - pump off - surging

Notes:
* Water Levels - Reported to the nearest 0.01 foot
* pH - Reading rounded to 0.1 pH units
* Water temperature - Reported to nearest 0.1C
* Turbidity report in NTV nearest whole #
GPM = Gallons Per Minute

Where:
B=3.14
$\emptyset_s$= porosity of the sand pack
r_c= radius of the well casing and screen in feet
L_c= length of water column inside the casing and screen in feet
r_w= radius of the well bore in feet
L_s= length of saturated portion of the sand pack in feet
7.48 gallons/cubic foot= conversion from cubic feet to gallons

Well Development Record

Project: KAFB ESTCP

Project Number: 500433

Date: 3/29/17

Time Start:

Well No: KAFB 106MW2 I

Samplers: Crystal Hardee

Checked By: C. LaChance

Time Finish: 1231

Field Chemistry (cont'd)

Date	Time	Water Level (ft. Below TOC)	Volume Removed (gal.)	Temp.°C	pH	EC (ms/cm)	Turbidity N.T.U.	Comments
3/29/17	0918	NR	192	NR				Pump on 3.8gpm
	0943	NR	289	20.7	7.71	0.362	22.4	Interface @ 515
	1008	NR	386	20.6	7.77	0.368	12.9	
	1033	NR	486	20.7	7.81	0.372	11.1	
	1068	NR	583	20.4	7.80	0.371	5.43	
	1123	NR	680	20.8	7.84	0.369	6.42	shutting pump off-surge
	1133	NR	680	NR				Surge- pump off
	1138	NR	680	NR				Pump on
	1206	NR	777	20.8	7.85	0.368	6.83	
	1231	NR	875	20.8	7.88	0.366	4.99	Development complete

Was well sampled after development? YES ____ NO X

Sample Method: N/A

Sample Name: N/A

Analyses: N/A

NEW MEXICO
ENVIRONMENT DEPARTMENT

SUSANA MARTINEZ
Governor
JOHN A. SANCHEZ
Lieutenant Governor

2905 Rodeo Park Drive East, Building 1
Santa Fe, New Mexico 87505-6303
Phone (505) 476-6000 Fax (505) 476-6030
www.env.nm.gov

BUTCH TONGATE
Cabinet Secretary
J. C. BORREGO
Deputy Secretary

CERTIFIED MAIL – RETURN RECEIPT REQUESTED

April 20, 2017

Colonel Eric. H. Froelich
Base Commander
377 ABW/CC
2000 Wyoming Blvd SE
Kirtland AFB, NM 87117-5606

Lieutenant Colonel Wayne J. Acosta
Civil Engineer Office
377 Civil Engineering Division
2050 Wyoming Blvd SE, Suite 116
Kirtland AFB, NM 87117-5270

RE: BULK FUELS FACILITY EXPANSION OF THE DISSOLVED-PHASE PLUME GROUNDWATER TREATMENT SYSTEM DESIGN, REVISION 2
SOLID WASTE MANAGEMENT UNIT ST-106/SS-111
KIRTLAND AIR FORCE BASE
EPA ID# NM9570024423, HWB-KAFB-13-MISC

Dear Colonel Froelich and Lt. Colonel Acosta:

The New Mexico Environment Department ("NMED") is in receipt of the Kirtland Air Force Base ("KAFB") report titled *Borehole Abandonment Activities Report, Performed as part of the construction effort for the Ethylene Dibromide In Situ Biodegradation Pilot Test* ("Report"), dated March 8, 2017. The Report addresses abandonment activities relating to a borehole for groundwater monitoring well KAFB-106MW2. The Report also documents revisions to the original borehole abandonment plan due to delivery of an incorrect grout mixture for borehole abandonment.

NMED concurs with the Office of the State Engineer's February 20, 2017 approval of the original borehole abandonment plan. It is noted that the drilling contractor placed pre-mixed material that did not meet the OSE approved specifications down the borehole from 500 feet below ground surface ("bgs") to 87 feet bgs. KAFB is proposing to complete borehole abandonment with 95-97 percent Type I/II Portland cement and 3-5 percent bentonite grout mix from 87 to 2 feet bgs. From 2 feet bgs to the ground surface, KAFB proposes to use native soil

from the surface of the site. For the reasons noted herein, the proposed additional borehole abandonment activities are approved.

If you have any questions regarding this letter, please contact Diane Agnew at (505) 222-9555.

Sincerely,

JCB

Juan Carlos Borrego
Deputy Secretary
Environment Department

cc: Col. M. Harner, KAFB
K. Lynnes, KAFB
A. Bodour, KAFB-AFCEC
T. Simpler, USACE
M.L. Leonard, AEHD
F. Shean, ABCWUA
L. King, EPA-Region 6 (6PD-N)
J. Kieling, NMED-HWB
D. Agnew, NMED-GWQB
S. Pullen, NMED-GWQB
M. Hunter, NMED-GWQB

File: KAFB 2017 Bulk Fuels Facility Spill

DEPARTMENT OF THE AIR FORCE
377TH AIR BASE WING (AFGSC)

Colonel Eric H. Froehlich
377 ABW/CC
2000 Wyoming Blvd SE
Kirtland AFB NM 87117-5000

MAR 0 8 2017

Mr. John Kieling, Bureau Chief
Hazardous Waste Bureau (HWB)
New Mexico Environment Department (NMED)
2905 Rodeo Park Drive East, Building 1
Santa Fe NM 87505-6303

RECEIVED
MAR - 8 2017
NMED
Albuquerque Field Office

Dear Mr. Kieling

Please find attached the Borehole Abandonment Activities Report which addresses abandonment activities performed at the original KAFB-106MW2 borehole location and subsequent activities relating to the abandonment. Abandonment activities were performed at the Kirtland Air Force Base Bulk Fuels Facility site. The Report also includes the original well plugging plan that was submitted and approved by the Office of the State Engineer on 10 February 2017 and the revised plugging plan submitted to the New Mexico Environment Department. This document is being submitted to address the email received from the New Mexico Environment Department on 1 March 2017 regarding borehole abandonment.

Once the proposed abandonment of the remaining 87 feet of the borehole has been approved, abandonment will be completed and a well plugging report will be submitted to the Office of the State Engineer and to the New Mexico Environment Department, if they desire, documenting the deviation from the plugging plan and the actual material that was used during abandonment.

Please contact Mr. Scott Clark at 505-846-9017 or at scott.clark@us.af.mil if you have any questions.

Sincerely

ERIC H. FROEHLICH, Colonel, USAF
Commander

2 Attachments:
1. Original OSE Plugging Plan with Approval with Conditions Letter
2. Revised Plugging Plan from Drilling Subcontractor

cc:
NMED-HWB (Agnew), letter/hard copy
NMED-GWQB (Hunter), letter/hard copy
SAF-IEE (Lynnes), electronic
AFCEC/CZ (Bodour, Clark), electronic
USACE-Omaha District Office (Ellender), electronic
USACE-ABQ District Office (Simpler, Phaneuf), electronic
Public Info Repository, Administrative Record/Information Repository, and File, letter/hard copy

40 CFR 270.11
DOCUMENT CERTIFICATION
MARCH 2017

I certify under penalty of law that this document and all attachments were prepared under my direction or supervision according to a system designed to assure that qualified personnel properly gather and evaluate the information submitted. Based on my inquiry of the person or persons who manage the system, or those persons directly responsible for gathering the information, the information submitted is, to the best of my knowledge and belief, true, accurate, and complete. I am aware that there are significant penalties for submitting false information, including the possibility of fines and imprisonment for knowing violations.

ERIC H. FROEHLICH, Colonel, USAF
Commander, 377th Air Base Wing

This document has been approved for public release.

KIRTLAND AIR FORCE BASE
377th Air Base Wing Public Affairs

March 8, 2017

Subject: Borehole Abandonment Activities Report,
Performed as part of the construction effort for the Ethylene Dibromide In Situ Biodegradation Pilot Test.
Bulk Fuels Facility, Kirtland Air Force Base, New Mexico

This Borehole Abandonment Activity Report has been prepared by CB&I Federal Services LLC (CB&I) for the U.S. Army Corps of Engineers (USACE), Omaha District, under Contract No. W9128F-12-D-0003, Task Order 0025 to address borehole abandonment at the original KAFB-106MW2 location. The activities described in this Report were performed at the Kirtland Air Force Base (AFB) Bulk Fuels Facility (BFF) site.

The original borehole KAFB-106MW2 was evaluated and determined to have a large vertical deviation after drilling (approximately 85.35 degrees at the bottom of the borehole). The deviation was measured and evaluated while the drive casing was in the borehole prior to any well installation activities. It was determined that the deviation was too great for successful well installation and that the borehole should be abandoned.

No well infrastructure was placed in the original borehole for KAFB-106MW2, and the borehole contained only the 11 ¾ inch drive casing. Depth to water was measured at approximately 475 feet below ground surface (bgs) in the borehole for KAFB-106MW2. This depth was likely slightly elevated compared to site background due to recent drilling activities and the fact that the drive casing extended below the water table, which can cause artificial elevation within the casing.

No future borehole or well abandonment activities, for boreholes or wells that cross the water table, shall be performed without a plan approved by the New Mexico Environment Department and the Office of the State Engineer (OSE) in accordance with Section 6.5.17.10 of the Hazardous Waste Treatment Facility Operating Permit (Environmental Protection Agency identification number NM9570024423) and Section 19.27.4 of the New Mexico Administrative Code.

Completed Borehole Abandonment Activities

Borehole abandonment commenced on January 30, 2017 after verbal communication with the OSE prior to submittal of a plugging plan or approval of that plan.

Several 20-foot sticks of 11 ¾ inch drive casing were removed from the borehole and the native formation was allowed to collapse into the borehole from a depth of 557 feet bgs to approximately 500 feet bgs.

The planned borehole abandonment material was a 1 to 1 ratio by weight of Portland cement and sand slurry containing 6 gallons of water per 94 pound bag of cement (9-sack cement/sand slurry). This material was ordered from a concrete/cement supply company by the drilling subcontractor and premixed off site. Upon delivery of the pre-mixed material in a cement truck, the drilling subcontractor and contractor personnel asked the driver if the correct material had been mixed and delivered. Both parties were told yes by the concrete/cement company. A tremie pipe was placed to 500 feet bgs and was used to pump the material to approximately 450 feet bgs. It was observed that the material seemed dense and difficult to tremie. The narrow tremie pipe was then removed and the material was placed from 450 feet to approximately 87 feet bgs (depth measured after settling) using the drive casing as the tremie pipe. The drive casing was incrementally removed as the cement/sand slurry was placed. The theoretical volume of sealant required for the 11 ¾ inch borehole from a depth of 500 feet was calculated to be approximately 13 cubic yards. The actual volume recorded during grouting activities was 13 cubic yards, bringing the cement/sand slurry up to 87 feet bgs. From the total borehole depth of 557 to 500 feet bgs, native formation backfilled the bottom of the borehole as the drive casing was removed, that volume was approximately 1.6 cubic yards.

Since the theoretical amount of cement/sand slurry did not exceed the actual amount placed down hole and the depth where placement of sealing started was 500 feet bgs, no bridging of material occurred in the borehole.

Later that day, after borehole abandonment had commenced to approximately 87 feet bgs, it was discovered that the material that had been delivered and placed in the borehole was a 2-sack cement/sand slurry (flowable fill material) containing approximately 1 gallon of water per 6.2 pounds of cement. The concrete/cement company had misheard the order placed by the drilling subcontractor and mixed and delivered the wrong material to the site. The material had been difficult to tremie into the borehole due to the high sand content of the mix.

The original borehole plugging plan was submitted to the OSE on February 6, 2017 and reflected the incorrect material placed. The OSE provided approval with modifications on February 10, 2017 stating that the correct material should be placed in accordance with NMAC 19.27.4.30.C.1. The OSE approval and original plugging plan are included as Attachment 1. The drilling subcontractor contacted the OSE on February 14, 2017 and discussed the improper material that was used to backfill and was informed by the OSE to use an approved material for plugging the top 87 feet of the borehole. The plugging plan was then revised to reflect the material that should have been used for abandonment, included as Attachment 2.

After abandonment is complete, a well plugging report will be submitted to the OSE within 20 days after completion of well abandonment activities documenting the deviation from the plugging plan and the actual material that had been placed in the borehole.

Additional Borehole Abandonment Activities that have not been performed

Abandonment of the original borehole KAFB-106MW2 is not complete pending approval of material to be placed from approximately 87 feet bgs to 2 feet bgs. The following mix is proposed for this depth interval: a 95-97% Type I/II Portland cement and 3-5% bentonite grout mix with 6 gallons of water per 94 pounds of cement with an additional 1.5 to 2.5 gallons of water added for the bentonite volume.

The cement slurry discussed above is proposed to be placed via tremie pipe. The theoretical volume used to fill this interval is approximately 3.5 cubic yards (over estimate based on potential loose formation in this zone) providing that the borehole has not accumulated native formation above the sealant that was originally placed to 87 feet bgs.

From a depth of two feet to ground surface, the borehole is proposed to be filled with native soil from the surface of the site. The borehole is located in an undeveloped area of Kirtland AFB and the native soil will be reseeded at the end of construction activities.

Attachment 1

STATE OF NEW MEXICO
OFFICE OF THE STATE ENGINEER

DISTRICT 1

TOM BLAINE, P.E.
NEW MEXICO STATE ENGINEER

5550 San Antonio Drive, N.E.
Albuquerque, NM 87109 (505) 383-4000

February 10, 2017

File No.: RG-1579 POD327-328

Kirtland Air Force Base
Attn: Wayne Bitner, Chief, Environmental Restoration
AFCEC/Kirtland AFB IST; Bldg 20685
2050 Wyoming Blvd, SE
Kirtland AFB, NM 87117-5270

Greetings:

Enclosed is the Well Plugging Plans of Operations, which has been approved subject to the Conditions of Approval, attached hereto.

Sincerely,

Christopher Burrus
Water Resource Specialist
Albuquerque, OSE, District 1

Enclosures as stated

c: WRAB

WELL PLUGGING PLAN OF OPERATIONS

NOTE: A Well Plugging Plan of Operations shall be filed with and accepted by the Office of the State Engineer prior to plugging.

I. FILING FEE: There is no filing fee for this form.

II. GENERAL / WELL OWNERSHIP:

Existing Office of the State Engineer POD Number (Well Number) for well to be plugged: RG-1579 PODs 327-328

Name of well owner: Kirtland Air Force Base

Mailing address: Chief Environmental Restoration, 377 MSG/CEANR, 2050 Wyoming Blvd. SE

City: Kirtland AFB State: New Mexico Zip code: 87117

Phone number: 505-846-9017 E-mail: scott.clark@us.af.mil

III. WELL DRILLER INFORMATION:

Well Driller contracted to provide plugging services: Cascade Drilling L.P.

New Mexico Well Driller License No.: WD-1210 Expiration Date: 10/31/17

IV. WELL INFORMATION:

Note: A copy of the existing Well Record for the well to be plugged should be attached to this plan.

1) GPS Well Location: Latitude: 35 deg, 3 min, 1.05 sec
Longitude: -106 deg, 34 min, 39.71 sec, NAD 83

2) Reason(s) for plugging well: A gyroscopic borehole tool was used prior to well installation to determine the degree of borehole deviation. During testing, it was determined that the bottom of the borehole was deviated 26.35 feet. The deviation results measured at PODs 327 and 328 (nested monitoring well) are too large for successful well installation. The only infrastructure in the borehole is the 11-3/4-inch overdrive casing, which will be removed during borehole abandonment.

2017 FEB 6 PM 8:11
STATE ENGINEER OFFICE
ALBUQUERQUE, NEW MEXICO

3) Was well used for any type of monitoring program? No If yes, please use section VII of this form to detail what hydrogeologic parameters were monitored. If the well was used to monitor contaminated or poor quality water, authorization from the New Mexico Environment Department may be required prior to plugging.

4) Does the well tap brackish, saline, or otherwise poor quality water? No If yes, provide additional detail, including analytical results and/or laboratory report(s):

5) Static water level: 475 feet below land surface

6) Depth of the well: 557 feet below land surface

7) Inside diameter of innermost casing: 11-3/4 inches.

8) Casing material: Stainless steel overdrive casing. Casing will be removed during abandonment.

9) The well was constructed with:

N/A an open-hole production interval, state the open interval: _____

N/A a well screen or perforated pipe, state the screened interval(s): _____

10) What annular interval surrounding the artesian casing of this well is cement-grouted? N/A

11) Was the well built with surface casing? No If yes, is the annulus surrounding the surface casing grouted or otherwise sealed? N/A If yes, please describe: _____

12) Has all pumping equipment and associated piping been removed from the well? N/A If not, describe remaining equipment and intentions to remove prior to plugging in Section VII of this form.

V. DESCRIPTION OF PLANNED WELL PLUGGING:

Note: If this plan proposes to plug an artesian well in a way other than with cement grout, placed bottom to top with a tremie pipe, a detailed diagram of the well showing proposed final plugged configuration shall be attached, as well as any additional technical information, such as geophysical logs, that are necessary to adequately describe the proposal.

1) Describe the method by which cement grout shall be placed in the well, or describe requested plugging methodology proposed for the well: The 11-3/4-inch casing will be pulled up and native soil will be allowed to backfill the borehole until the top of groundwater is reached (475 feet bgs). A cement-sand slurry will be pumped downhole to approximately 40 feet bgs as the overdrive casing is progressively pulled upward throughout grouting. Upon reaching 40 feet bgs, a bentonite slurry will be pumped in place to approximately 2 feet bgs, and remaining overdrive casing will be removed. Native soil will cover the top 2 feet of the borehole, as it is located in an undeveloped area containing only native vegetation.

2) Will well head be cut-off below land surface after plugging? No; well installation activities were not initiated.

STATE ENGINEER OFFICE
ALBUQUERQUE, NEW MEXICO
2017 FEB-6 PM 8:11

VI. PLUGGING AND SEALING MATERIALS:

Note: The plugging of a well that taps poor quality water may require the use of a specialty cement or specialty sealant

1) For plugging intervals that employ cement grout, complete and attach Table A.

2) For plugging intervals that will employ approved non-cement based sealant(s), complete and attach Table B.

3) Theoretical volume of grout required to plug the well to land surface: 13 cubic yards (2555 gallons)

4) Type of Cement proposed: Portland-based cement-sand slurry

5) Proposed cement grout mix: See Additional Notes gallons of water per 94 pound sack of Portland cement.

6) Will the grout be: X batch-mixed and delivered to the site

_____ mixed on site

7) Grout additives requested, and percent by dry weight relative to cement: _____

8) Additional notes and calculations: ~~NMDOT Flowable Fill #2 will be used to abandon well. Mix will include 1 gallon of water per 6.2 pounds of cement~~ CS 2/10/17 Not an approved variant. SEE Conditions of approval for Alternative plugging.

VII. ADDITIONAL INFORMATION: List additional information below, or on separate sheet(s): Well Records for PODs 327 and 328 have not been submitted to the OSE. The deviation was discovered prior to well installation activities. The approved permit to drill a well with no consumptive use is attached.

VIII. SIGNATURE:

I, DAWN A. NICKELL, COLONEL, USAF, 377 ABW VICE COMMANDER, say that I have carefully read the foregoing Well Plugging Plan of Operations and any attachments, which are a part hereof; that I am familiar with the rules and regulations of the State Engineer pertaining to the plugging of wells and will comply with them, and that each and all of the statements in the Well Plugging Plan of Operations and attachments are true to the best of my knowledge and belief.

FEB 03 2017

Signature of Applicant

Date

2017 FEB -6 PM 8: 11

STATE ENGINEER OFFICE ALBUQUERQUE, NEW MEXICO

IX. ACTION OF THE STATE ENGINEER:

This Well Plugging Plan of Operations is:

✓ Approved subject to the attached conditions.
_____ Not approved for the reasons provided on the attached letter.

Witness my hand and official seal this 10 day of February, 2017

~~Scott A. Verhines, State Engineer~~

Tom Blaine, P.E.
State Engineer

By: _____

TABLE A - For plugging intervals that employ cement grout. Start with deepest interval.

	Interval 1 – deepest	Interval 2	Interval 3 – most shallow
			Note: if the well is non-artesian and breaches only one aquifer, use only this column.
Top of proposed interval of grout placement (ft bgl)			40
Bottom of proposed interval of grout placement (ft bgl)			475
Theoretical volume of grout required per interval (gallons)			2555
Proposed cement grout mix gallons of water per 94-lb. sack of Portland cement			Flowable Fill mix will include 1 gallon of water per 6.2 pounds of cement
Mixed on-site or batch-mixed and delivered?			Batch-mixed and delivered
Grout additive 1 requested			
Additive 1 percent by dry weight relative to cement			
Grout additive 2 requested			
Additive 2 percent by dry weight relative to cement			

STATE ENGINEER OFFICE
ALBUQUERQUE, NEW MEXICO
2017 FEB -6 PM 8: 11

TABLE B - For plugging intervals that will employ approved non-cement based sealant(s). Start with deepest interval.

	Interval 1 – deepest	Interval 2	Interval 3 – most shallow
			Note: if the well is non-artesian and breaches only one aquifer, use only this column.
Top of proposed interval of sealant placement (ft bgl)			2
Bottom of proposed sealant of grout placement (ft bgl)			40
Theoretical volume of sealant required per interval (gallons)			223
Proposed abandonment sealant (manufacturer and trade name)			Bentonite slurry

STATE ENGINEER OFFICE
ALBUQUERQUE, NEW MEXICO
2017 FEB -6 PM 8: 11

STATE OF NEW MEXICO
OFFICE OF THE STATE ENGINEER

DISTRICT 1

TOM BLAINE, P.E.
NEW MEXICO STATE ENGINEER

5550 San Antonio Drive, N.E.
Albuquerque, NM 87109 (505) 383-4000

Materials submitted by Kirtland Air Force Base (KAFB) identify one 12-inch Outer Diameter (OD) borehole drilled with an 11.75-inch Inner Diameter (ID) casing to a depth of 557-feet below ground surface (bgs) that deviated from a functional vertical path by 26.35-feet. Depth to water was measured at 475-feet bgs. KAFB request the abandonment of the borehole to re-drill the permitted Point of Diversion (POD) under permit RG-1579 POD327 and POD328. Cascade Drilling L.P., a New Mexico licensed driller (WD-1210), will perform the plugging.

The applicant proposes to plug the borehole using the casing, 12-inch Outer Diameter (OD), as a tremie for the transportation of materials to accomplish the plugging in four (4) distinct intervals as follows:

- Interval 1 — 475-feet bgs to 557-feet bgs is within the water bearing zone and expected to be filled with flowing native subsurface soil from the saturated area of the borehole during the tremie/casing withdraw,
- Interval 2 — 40-feet bgs to 475-feet bgs, is expected to be sealed with a cement and sand mixture,
- Interval 3 — 2-feet bgs to 40-feet bgs, filled with a bentonite slurry, and
- Interval 4 — The remaining 2-feet to surface will be filled with clean native soil.

Permittee: Kirtland Air Force Base
c/o Chief Environmental Restoration
2050 Wyoming Blvd, SE
Kirtland Air Force Base, NM 87117

Approximate coordinates: Latitude: 35° 03' 1.05" N, Longitude: 106° 34' 39.71" W

SPECIFIC PLUGGING CONDITIONS OF APPROVAL FOR WELL (RG-1579 POD327 AND POD328), RIO GRANDE UNDERGROUND BASIN LOCATED IN SECTION 36, TOWNSHIP 10 NORTH, RANGE 3 EAST

1. Water well drilling and well drilling activities, including well plugging, are regulated under 19.27.4 NMAC, which requires any person engaged in the business of well drilling within New Mexico to obtain a Well Driller License issued by the New Mexico Office of the State Engineer (NMOSE). Therefore, the firm of a New Mexico licensed Well Driller shall perform the well plugging.

2. **Measurement of the current static water level in the well prior to initiation of plugging IS REQUIRED, and shall be recorded on line II.7. of the Plugging Record.**

3. Theoretical volume of sealant required for abandonment of the 12-inch OD casing is approximately 5.8752 gallons per vertical foot. The reported depth of 557-feet was obtained from the plugging plan, and the theoretical volume of sealant necessary to plug the well is 3,873 gallons total.

4. **Plugging by use of Type I/II Portland Cement** is authorized as a sealant. Fundamental water demand for Type I/II Portland neat cement grout is 5.2 gallons per 94 lb/sack cement. The American Water Works Association (AWWA) Standard A100-06 allows up to 6.0 gallons water per sack (a less viscous mix), which may be used if necessary to aid placement of the slurry in well. NMAC 19.27.4.30.C.1 specifies **placement of sealant by use of tremie pipe**. When a tremie is used for grout/chip/pellet placement, it shall extend to near the total depth of the borehole/well at the initiation of plugging. The tremie shall be incrementally removed to retain the tremie bottom a limited distance above the top of the rising column of chips or pellets throughout the plugging process. Pumping the chips or pellets down the tremie with fresh water is allowed.

   Alternative plugging by use of Type I/II Portland and Sand Mixture is also authorized. The American Water Works Association (AWWA) Standard A100-06 and NMOSE, allows up to 1 part by weight of sand to 1 part cement with no more than 6 gallons of water per 94 lb sack of cement, may be used if necessary to aid placement of the slurry in well. NMAC 19.27.4.30.C.1 specifies **placement of sealant by use of tremie pipe**. When a tremie is used for grout/chip/pellet placement, it shall extend to near the total depth of the borehole/well at the initiation of plugging. The tremie shall be incrementally removed to retain the tremie bottom a limited distance above the top of the rising column of chips or pellets throughout the plugging process.

5. Should the NMED, or another regulatory agency sharing jurisdiction of the project authorize, or by regulation require a more stringent well plugging procedure than herein acknowledged, the more-stringent procedure should be followed. This, in part, includes provisions regarding pre-authorization to proceed, contaminant remediation, inspection, pulling/perforating of casing, or prohibition of free discharge of any fluid from the borehole during or related to the plugging process.

6. NMOSE witnessing of the plugging will not be required, but shall be facilitated if a NMOSE observer is onsite. NMOSE witnessing may be requested during normal work hours by calling the District 1 NMOSE Office at 505-383-4000, at least 48-hours in advance. NMOSE inspection will occur dependant on personnel availability.

7. A Well Plugging Report itemizing actual abandonment process and materials used shall be filed with the State Engineer (NMOSE, 5550 San Antonio Dr. N.E., Albuquerque, NM 87109), within 20 days after completion of well plugging. Please attach a copy of these plugging conditions.

The NMOSE Well Plugging Plan of Operations is hereby approved with the aforesaid conditions applied.

Witness my hand and seal this 10 day of February, 2017.

Tom Blaine P.E., State Engineer

By: _____

Christopher Burrus
Water Resource Specialist
District 1
Albuquerque, New Mexico

Attachment 2

DEPARTMENT OF THE AIR FORCE
377TH AIR BASE WING (AFGSC)

FEB 22 2017

Colonel Dawn A. Nickell
377 ABW/CV
2000 Wyoming Blvd SE
Kirtland AFB NM 87117-5000

Mr. John Kieling, Bureau Chief
Hazardous Waste Bureau (HWB)
New Mexico Environment Department (NMED)
2905 Rodeo Park Drive East, Building 1
Santa Fe NM 87505-6303

Dear Mr. Kieling

Kirtland Air Force Base is submitting herein one revised "Well Plugging Plan of Operations" for one borehole that would have contained the two nested wells (KAFB-106MW2-S and KAFB-106MW2-I). Kirtland AFB is proposing to plug and abandon the borehole, which had no well infrastructure installed, due to a borehole deviation measurement of 26.35 feet. The deviation measured at the borehole was too large for successful well installation, thus the overdrive casing will be removed and the borehole grouted using a Portland cement-sand slurry.

If you have any questions or concerns, please contact Mr. Scott Clark at (505) 846-9017 or at scott.clark@us.af.mil.

Sincerely,

DAWN A. NICKELL, Colonel, USAF
Vice Commander

cc:
NMED-RPD (McQuillan), letter/hard copy
NMED-GWQB (Agnew, Pullen, Hunter), letter/hard copy
EPA Region 6 (King, Ellinger), electronic
SAF-IEE (Lynnes), electronic
AFCEC/CZ (Bodour, Clark), electronic
USACE-Omaha District Office (Ellender), electronic
USACE-ABQ District Office (Simpler, Phaneuf), electronic
Public Info Repository, Administrative Record/Information Repository, and File, letter/hard copy

WELL PLUGGING PLAN OF OPERATIONS

NOTE: A Well Plugging Plan of Operations shall be filed with and accepted by the Office of the State Engineer prior to plugging.

I. FILING FEE: There is no filing fee for this form.

II. GENERAL / WELL OWNERSHIP:

Existing Office of the State Engineer POD Number (Well Number) for well to be plugged: RG-1579 PODs 327-328

Name of well owner: Kirtland Air Force Base

Mailing address: Chief Environmental Restoration. 377 MSG/CEANR, 2050 Wyoming Blvd. SE

City: Kirtland AFB State: New Mexico Zip code: 87117

Phone number: 505-846-9017 E-mail: scott.clark@us.af.mil

III. WELL DRILLER INFORMATION:

Well Driller contracted to provide plugging services: Cascade drilling, L.P.

New Mexico Well Driller License No.: WD-1210 Expiration Date: 10/31/17

IV. WELL INFORMATION:

Note: A copy of the existing Well Record for the well to be plugged should be attached to this plan.

1) GPS Well Location: Latitude: 35 deg, 3 min, 1.05 sec
Longitude: -106 deg, 34 min, 39.71 sec, NAD 83

2) Reason(s) for plugging well: A gyroscopic survey tool was used prior to well installation to determine the degrees of borehole deviation.During testing it was determined the bottom of the borehole was deviated 26.35 feet. The results measured at PODs 327 and 328 (nested monitoring well) are too large for successful well installation. The only infrastructure in the borehole is the 11 3/4" overdrive casing, which will be removed during borehole abandonment.

3) Was well used for any type of monitoring program or environmental assessment? No If yes, please use section VII of this form to detail what hydrogeologic parameters were monitored. If the well was used to monitor contaminated or poor quality water, authorization from the New Mexico Environment Department may be required prior to plugging.

4) Does the well tap brackish, saline, or otherwise poor quality water? No If yes, provide additional detail, including analytical results and/or laboratory report(s): _____

5) Static water level: 475 feet below land surface / feet above land surface (circle one)

6) Depth of the well: 557 feet

Trn. No

7) Inside diameter of innermost casing: 11 3/4" inches.

8) Casing material: Steel drive casing, casing will be removed during abandonment.

9) The well was constructed with:

NA an open-hole production interval, state the open interval: _____

NA a well screen or perforated pipe, state the screened interval(s): _____

10) What annular interval surrounding the artesian casing of this well is cement-grouted? NA

11) Was the well built with surface casing? No If yes, is the annulus surrounding the surface casing grouted or otherwise sealed? NA If yes, please describe: _____

12) Has all pumping equipment and associated piping been removed from the well? NA If not, describe remaining equipment and intentions to remove prior to plugging in Section VII of this form.

V. DESCRIPTION OF PLANNED WELL PLUGGING:

Note: If this plan proposes to plug an artesian well in a way other than with cement grout, placed bottom to top with a tremie pipe, a detailed diagram of the well showing proposed final plugged configuration shall be attached, as well as any additional technical information, such as geophysical logs, that are necessary to adequately describe the proposal.

1) Describe the method by which cement grout shall be placed in the well, or describe requested plugging methodology proposed for the well: Tremie Pipe will be placed to 500' in the hole and grout (9 sack cement sand slurry) will be pumped until 450' or 25' above the water table. The tremie then removed and grout pumped inside the 11 3/4" drive casing as the casing is removed allowing the grout to displace the casing. This will be completed until aproximately 87' bgs at which time a cement grout will be pumped to 2' bgs. Native soil will be placed to surface.

2) Will well head be cut-off below land surface after plugging? No well installation activities were initiated so no well exists.

VI. PLUGGING AND SEALING MATERIALS:

Note: The plugging of a well that taps poor quality water may require the use of a specialty cement or specialty sealant

1) For plugging intervals that employ cement grout, complete and attach Table A.

2) For plugging intervals that will employ approved non-cement based sealant(s), complete and attach Table B.

3) Theoretical volume of grout required to plug the well to land surface: 13 cubic yards (2,555 gallons)

4) Type of Cement proposed: 9 sack portland cement sand slurry (9 sack of Portland cement per cubic yard)

5) Proposed cement grout mix: 6 (six) gallons of water per 94 pound sack of Portland cement.

6) Will the grout be: X batch-mixed and delivered to the site

_____ mixed on site

Trn. No

7) Grout additives requested, and percent by dry weight relative to cement: Please see attached letter.

8) Additional notes and calculations: No well records for PODs 327 and 328 have been submitted as no well has been installed.

VII. ADDITIONAL INFORMATION: List additional information below, or on separate sheet(s):

VIII. SIGNATURE:

I, DAWN A. NICKELL, COLONEL, USAF, 377 ABW VICE COMMANDER, say that I have carefully read the foregoing Well Plugging Plan of Operations and any attachments, which are a part hereof; that I am familiar with the rules and regulations of the State Engineer pertaining to the plugging of wells and will comply with them, and that each and all of the statements in the Well Plugging Plan of Operations and attachments are true to the best of my knowledge and belief.

Dawn A Nickell — 22 Feb 17

Signature of Applicant — Date

IX. ACTION OF THE STATE ENGINEER:

This Well Plugging Plan of Operations is:

_____ Approved subject to the attached conditions.
_____ Not approved for the reasons provided on the attached letter.

Witness my hand and official seal this _____ day of _____, _____

Tom Blaine P.E., New Mexico State Engineer

By: _____

Trn. No

TABLE A - For plugging intervals that employ cement grout. Start with deepest interval.

	Interval 1 – deepest	**Interval 2**	**Interval 3 – most shallow**
			Note: if the well is non-artesian and breaches only one aquifer, use only this column.
Top of proposed interval of grout placement (ft bgl)			
Bottom of proposed interval of grout placement (ft bgl)			
Theoretical volume of grout required per interval (gallons)			
Proposed cement grout mix gallons of water per 94-lb. sack of Portland cement			
Mixed on-site or batch-mixed and delivered?			
Grout additive 1 requested			
Additive 1 percent by dry weight relative to cement			
Grout additive 2 requested			
Additive 2 percent by dry weight relative to cement			

Trn. No

TABLE B - For plugging intervals that will employ approved non-cement based sealant(s). Start with deepest interval.

	Interval 1 – deepest	**Interval 2**	**Interval 3 – most shallow**
			Note: if the well is non-artesian and breaches only one aquifer, use only this column.
Top of proposed interval of sealant placement (ft bgl)			
Bottom of proposed sealant of grout placement (ft bgl)			
Theoretical volume of sealant required per interval (gallons)			
Proposed abandonment sealant (manufacturer and trade name)			

Trn. No

Customer----------:	**Cascade**		
Property ----------:	**Kirtland AFB**		
Hole ID----------:	**106-NW2**		
Date ----------:	1/27/2017		
Backsite ----------:	322	Survey Type ---------:	SRG
Mag Dec ----------:	8.6	Latitude ----------:	N/A
Svy Ref Point -----:	330.6	Traverse ----------:	N/A
Projected Depth --:	N/A	Water Contact--------:	N/A

IDS Technician
Jason Farnsworth
775-385-4006

Comments
Thank You!

MEAS DEPTH (FEET)	TRUE VERTICAL DEPTH (FEET)	TRUE VERTICAL X-SECTION (FEET)	INCL (HORZ) (DEG)	DIRECTION (AZIMUTH)	RECTANGULAR COORDINATES N+/S- (FEET)	RECTANGULAR COORDINATES E+/W- (FEET)	DOGLEG 100/FT (DEG)	CLOSURE DISTANCE (FEET)	CLOSURE DIR (DEG)	TEMP (F) (DEG)
0	0.00	0.00	-89.35	114.70	0.00	0.00	0.00	0.00	0.00	44.8
25	25.00	0.26	-89.45	101.60	-0.08	0.25	0.68	0.26	108.70	45.7
50	50.00	0.56	-89.11	83.30	-0.08	0.56	1.63	0.56	98.67	45.7
75	74.99	0.97	-89.00	97.60	-0.09	0.97	1.04	0.97	95.39	46.6
100	99.99	1.47	-88.68	89.90	-0.12	1.47	1.42	1.47	94.64	46.6
125	124.98	2.15	-88.22	92.30	-0.13	2.15	1.86	2.15	93.59	47.5
150	149.97	2.94	-88.18	92.50	-0.17	2.93	0.16	2.94	93.27	46.6
175	174.95	3.76	-88.04	94.20	-0.22	3.75	0.60	3.76	93.29	47.5
200	199.94	4.61	-88.04	97.20	-0.30	4.60	0.41	4.61	93.74	48.3
225	224.92	5.62	-87.32	102.80	-0.48	5.60	3.02	5.62	94.94	50.1
250	249.89	6.84	-86.98	109.20	-0.83	6.79	1.86	6.84	96.97	50.1
275	274.85	8.15	-86.94	107.00	-1.24	8.05	0.49	8.15	98.77	50.1
300	299.81	9.54	-86.59	108.70	-1.68	9.39	1.45	9.54	100.11	51.9
325	324.76	11.10	-86.19	109.00	-2.18	10.88	1.60	11.10	101.35	51.0
350	349.70	12.79	-85.97	110.10	-2.76	12.49	0.93	12.79	102.44	51.9
375	374.64	14.58	-85.76	111.20	-3.39	14.18	0.90	14.58	103.46	51.0
400	399.57	16.45	-85.57	113.10	-4.11	15.93	0.95	16.45	104.45	52.7
425	424.49	18.38	-85.48	113.40	-4.88	17.72	0.37	18.38	105.38	49.2
450	449.41	20.33	-85.47	116.40	-5.71	19.51	0.95	20.33	106.30	52.7
475	474.33	22.30	-85.36	115.30	-6.58	21.31	0.56	22.30	107.15	54.5
500	499.25	24.32	-85.28	114.60	-7.44	23.16	0.39	24.32	107.80	56.2
525	524.17	26.35	-85.35	113.50	-8.27	25.02	0.46	26.35	108.29	57.1

Kirtland Air Force Base
Pilot System Control Panel

Albuquerque, New Mexico

DRAWING INDEX

PILOT SYSTEM CONTROL PANEL

1000	SHEET INDEX
1000-A	ELECTRICAL SYMBOLS AND ABBREVIATIONS
1001	CONTAINER LAYOUT
1002	SINGLE LINE DIAGRAM
1010	ENCLOSURE LAYOUT
1011	BACKPLATE LAYOUT
1012	SYSTEM NETWORK DIAGRAM / PLC MODULE LAYOUT
1020	120VAC POWER DISTRIBUTION
1021	24VDC POWER DISTRIBUTION
1030	PLC SLOT 1 - DIGITAL INPUT MODULE WIRING DIAGRAM
1031	PLC SLOT 2 - DIGITAL INPUT MODULE WIRING DIAGRAM
1040	PLC SLOT 3 - DIGITAL OUTPUT MODULE WIRING DIAGRAM
1041	PLC SLOT 4 - DIGITAL OUTPUT MODULE WIRING DIAGRAM
1050	PLC SLOT 5 - ANALOG INPUT MODULE WIRING DIAGRAM
1060	PLC SLOT 7 - ANALOG OUTPUT MODULE WIRING DIAGRAM

REV	DESCRIPTION	DATE	NAME
1	INITIAL RELEASE	07/14/16	JU

CALCON SYSTEMS
Automation & Process Control Specialists

CALCON SYSTEMS, INC.
12919 ALCOSTA BLVD, SUITE 9
SAN RAMON, CA 94583
TEL: 925-277-0665
WWW.CALCON.COM

DRAWN	JU	07/14/16
DESIGN	JD	07/14/16
CHECKED	JD	07/14/16
APPROVED	JD	07/14/16

FILE: 11765_1000.DWG

CLIENT: KIRTLAND AFB

JOB: 11765

LOCATION: ALBUQUERQUE, NEW MEXICO

TITLE: KIRTLAND AIR FORCE BASE PILOT SYSTEM CONTROL PANEL

SHEET INDEX

DRAWING NO. 1000 | REV 1 | SHEET 1 OF 15

Z:\CUSTOMERS\C_CUSTOMERS\CB&I\11765_KIRTLAND AFB PILOT SYSTEM\DRAWINGS\CALCON DWG FILES\11765_1000.DWG

NORMALLY OPEN CONTACT

NORMALLY CLOSED CONTACT

NORMALLY OPEN LIMIT SWITCH

NORMALLY CLOSED LIMIT SWITCH

NORMALLY OPEN FLOAT SWITCH

NORMALLY CLOSED FLOAT SWITCH

NORMALLY OPEN PRESSURE SWITCH

NORMALLY CLOSED PRESSURE SWITCH

NORMALLY OPEN TEMPERATURE SWITCH

NORMALLY CLOSED TEMPERATURE SWITCH

NORMALLY CLOSED FLOW SWITCH (AIR OR FLUID)

NORMALLY OPEN FLOW SWITCH (AIR OR FLUID)

NORMALLY OPEN PUSHBUTTON (MOMENTARY CONTACT)

NORMALLY CLOSED PUSHBUTTON (MOMENTARY CONTACT)

NORMALLY OPEN MUSHROOM PUSHBUTTON

NORMALLY CLOSED MUSHROOM PUSHBUTTON, MOMENTARY OPEN.

SWITCH
2 POSITION NORMALLY OPEN

SWITCH
2 POSITION NORMALLY CLOSED

SWITCH
3 POSITION HAND-OFF-AUTO

SINGLE POLE TOGGLE SWITCH
("ON-OFF",ETC.)

GROUND CONNECTION.

NORMALLY OPEN SWITCH WITH TIME DELAY CLOSING.

NORMALLY CLOSED SWITCH WITH TIME DELAY OPENING.

NORMALLY OPEN SWITCH WITH TIME DELAY OPENING

NORMALLY CLOSED WITH TIME DELAY CLOSING

HEATER

CURRENT TRANSFORMER

COIL/INDUCTOR

TRANSFORMER

1 — TERMINAL BLOCK

#A F1 — FUSED TERMINAL BLOCK

1 — GROUNDED TERMINAL BLOCK

CIRCUIT BREAKER

WHM — WATT HOUR METER AND SOCKET

PF — POWER FAILURE RELAY

M — METER & CURRENT TRANSFORMER

R — RELAY

LR — LATCHING RELAY

TD — TIME DELAY RELAY

ISR — INTRINSICALLY SAFE RELAY

DUPLEX RECEPTACLE

SIMPLEX RECEPTACLE

BATTERY

ELECTROLYTIC CAPACITOR

SOLENOID

RESISTOR

DIODE

MOTOR OVERLOAD

CROSSING OF CONDUCTORS
NOT CONNECTED.

CONNECTION OF CONDUCTORS
CONNECTED

C — INDICATOR LIGHT
COLOR AS INDICATED

LA — LIGHTNING ARRESTOR

EQUIPMENT TAG REFERENCE

I/O POINT REFERENCE PLC, I/O RACK, OR
ANNUNCIATOR PANEL

DRAWING REFERENCE

LOCATION SYMBOL

M — MOTOR STARTER CONTACTOR COIL

1 — SHEET NOTE TAG

E-1 — EDGE CONNECTOR

INSTRUMENT
(SEE IDENTIFICATION TABLE)

PANEL WIRE

BOUNDARY LINE

FIELD WIRING

INTERNALLY CONNECTED

SUCCEEDING LETTERS
FIRST LETTER
UNIT PROCESS NUMBER
LOOP NUMBER

FC
A-B

FC / A-B — FIELD MOUNTED INSTRUMENT

AIT / A-B — FACE MOUNTED INSTRUMENT
MAIN PANEL, OPERATOR ACCESSIBLE

AIT / A-B — PANEL MOUNTED INSTRUMENT
OPERATOR INACCESSIBLE

AIT / A-B — FACE MOUNTED INSTRUMENT
FIELD PANEL, OPERATOR ACCESSIBLE

AIT / A-B — MULTIFUNCTION INSTRUMENT

QUICK DISCONNECT COUPLER

EXPANSION JOINT OR RUBBER BOOT

FLEX HOSE

S — SOLENOID VALVE

M — 3-WAY VALVE (MOTOR ACTUATED)

PRESSURE REGULATOR, SELF-CONTAINED,
WITH HANDWHEEL ADJUSTABLE SET POINT

AIR ACTUATED VALVE

MANUAL VALVE

SAMPLE PORT

CHECK VALVE

NEEDLE VALVE

METERING PUMP

	First Letter		Succeeding letters		
	Measured or Initiating Variable	Modifier	Readout or Passive Function	Output Function	Modifier
A	Analysis		Alarm		
B	Burner, Combustion				
C				Control	
D		Differential			
E	Voltage		Sensor		
F	Flow Rate	Ratio			
G			Glass		
H	Hand				High
I	Current (Electrical)		Indicate		
J	Power	Scan			
K	Time, Schedule	Time, Rate of Change		Control Station	
L	Level		Light		Low
M		Momentary			Middle, Intermediate
N					
O			Orifice, Restriction		
P	Pressure	Integrate	Point Connection		
Q	Quantity				
R	Radiation		Record		
S	Speed, Frequency	Safety		Switch	
T	Temperature			Transmit	
U	MultiVariable		Multifunction	Multifunction	Multifunction
V	Vibration			Valve, Damper, Louver	
W	Weight, Force		Well		
X		X Axis			
Y	Even, State, Presence	Y Axis		Relay, Compute, Convert	
Z	Position, Dimension	Z Axis		Driver, Actuator	

Abbreviations

A	AMPERES	DPST	DOUBLE POLE SINGLE THROW	M	MOTOR	SPDT	SINGLE POLE DOUBLE THROW
AC	ALTERNATING CURRENT	DWG	DRAWING	MOV	MOTOR OPERATED VALVE	SPST	SINGLE POLE SINGLE THROW
ATS	AUTOMATIC TRANSFER SWITCH	E	EXISTING	N	NEUTRAL	STL	STEEL
AUX	AUXILIARY	FDR	FEEDER	NC	NORMALLY CLOSED	STP	SHIELDED TIWSTED PAIR
AUTO	AUTOMATIC	FIN	FINISHED	NEC	NATIOAL ELECTRIC CODE	SOV	SOLENOID VALVE
AWG	AMERICAN WIRE GAUGE	FLA	FULL LOAD AMPS	NO	NORMALLY OPEN	SW	SWITCH
BC	BARE COPPER	FLEX	FLEXIBLE	NTS	NOT TO SCALE	TB	TERMINAL BLOCK
BKR	BREAKER	GFI	GROUND FAULT INTERRUPT	NV	NEEDLE VALVE	TD	TIME DELAY
C	CONDUIT	GND	GROUND	OT	OVERTEMP	TEMP	TEMPERATURE
CB	CIRCUIT BREAKER	HOA	HAND-OFF-AUTO	PR	PRESSURE REGULATOR	TERM	TERMINAL
COND	CONDUCTOR	IN	INCHES	PLC	PROGRAMMABLE CONTROLLER	T	TEMPERATURE SWITCH
CONTD	CONTINUED	JB	JUNCTION BOX	PNL	PANEL	TYP	TYPICAL
CP	CONTROL PANEL	KVA	KILOVOLT-AMPERES	POS	POSITION	UG	UNDERGROUND
CT	CURRENT TRANSFORMER	KW	KILOWATT	RCP	RECEPTACLE	V	VOLTS
CR	CONTROL RELAY	LM	LIMIT	RTU	REMOTE TERMINAL UNIT	VFD	VARIABLE FREQUENCY DRIVE
CV	CHECK VALVE	MA	MILLIAMPERES	SEL	SELECTOR	W	WATTS
DC	DIRECT CURRENT	MCC	MOTOR CONTROL CENTER	SPEC	SPECIFICATION	W/	WITH
DPDT	DOUBLE POLE SINGLE THROW	MIN	MINUTES OR MINIMUM	SS	STAINLESS STEEL	W/O	WITHOUT

REV	DESCRIPTION	DATE	NAME
1	INITIAL RELEASE	07/14/16	JU

CALCON SYSTEMS
Automation & Process Control Specialists

CALCON SYSTEMS, INC.
12919 ALCOSTA BLVD, SUITE 9
SAN RAMON, CA 94583
TEL: 925-277-0665
WWW.CALCON.COM

DRAWN	JU	07/14/16
DESIGN	JD	07/14/16
CHECKED	JD	07/14/16
APPROVED	JD	07/14/16

FILE: 11765_1000-A.DWG

CLIENT: KIRTLAND AFB
JOB: 11765
LOCATION: ALBUQUERQUE, NEW MEXICO

TITLE: KIRTLAND AIR FORCE BASE
PILOT SYSTEM CONTROL PANEL
ELECTRICAL SYMBOLS AND ABBREVIATIONS

DRAWING NO. 1000-A | REV 1 | SHEET 2 OF 15

Z:\CUSTOMERS\C_CUSTOMERS\CB&I\11765_KIRTLAND AFB PILOT SYSTEM\DRAWINGS\CALCON DWG FILES\11765_1000-A.DWG

NOTE:

1. ENTIRE CONTAINER INSULATED: R13 UNDER ACX PLYWOOD.

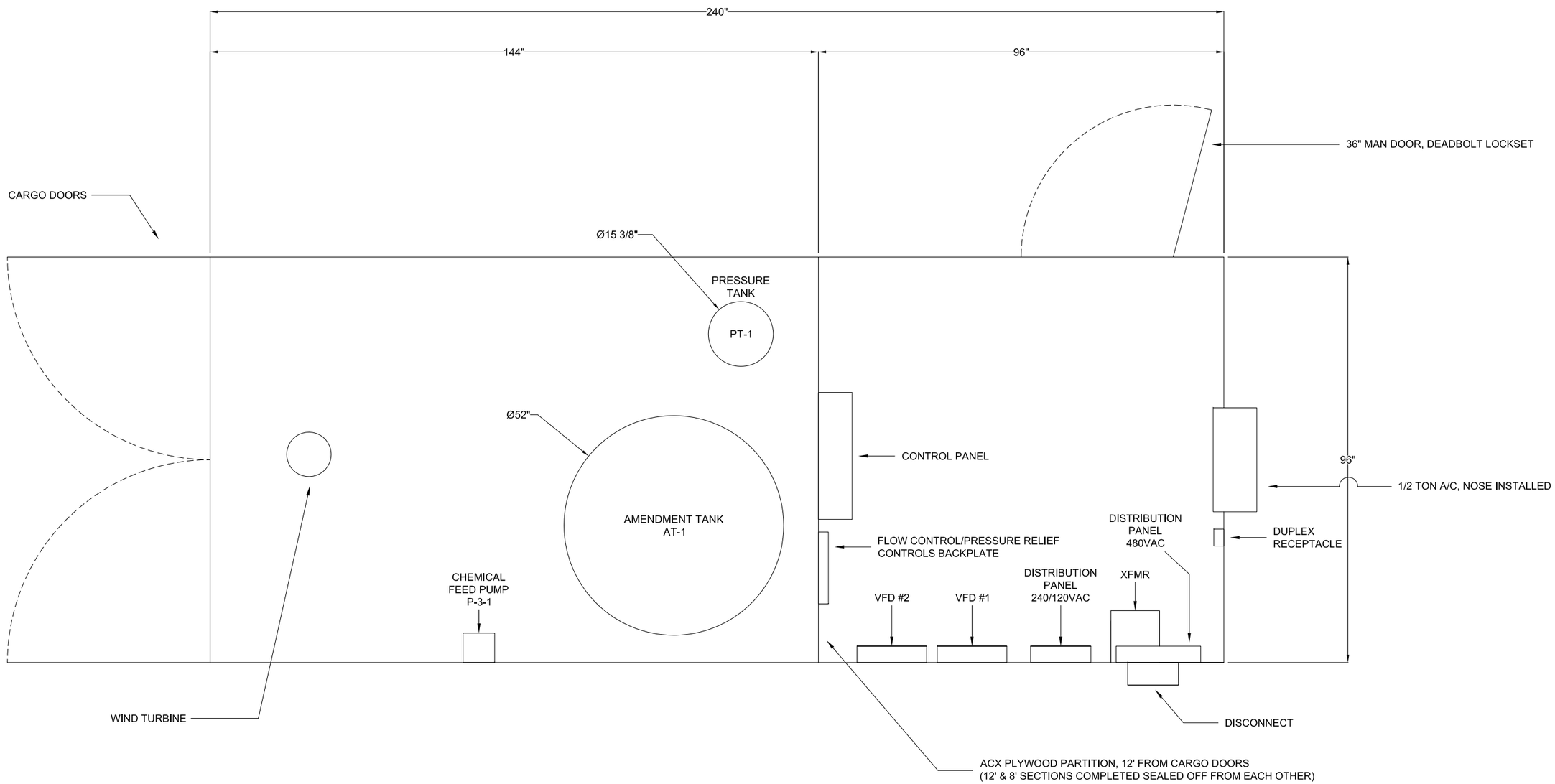

CUSTOM-MODIFIED CONTAINER - AERIAL VIEW

REV	DESCRIPTION	DATE	NAME
1	INITIAL RELEASE	07/14/16	JU

CALCON SYSTEMS
Automation & Process Control Specialists

CALCON SYSTEMS, INC.
12919 ALCOSTA BLVD, SUITE 9
SAN RAMON, CA 94583
TEL: 925-277-0665
WWW.CALCON.COM

DRAWN	JU	07/14/16
DESIGN	JD	07/14/16
CHECKED	JD	07/14/16
APPROVED	JD	07/14/16

FILE: 11765_1001.DWG

CLIENT: KIRTLAND AFB
JOB: 11765
LOCATION: ALBUQUERQUE, NEW MEXICO

TITLE: KIRTLAND AIR FORCE BASE
PILOT SYSTEM CONTROL PANEL
CONTAINER LAYOUT

DRAWING NO. 1001 | REV 1 | SHEET 3 OF 15

Z:\CUSTOMERS\C_CUSTOMERS\CB&I\11765_KIRTLAND AFB PILOT SYSTEM\DRAWINGS\CALCON DWG FILES\11765_1001.DWG

PLACE HOLDER

REV	DESCRIPTION	DATE	NAME
1	INITIAL RELEASE	07/14/16	JU

CALCON SYSTEMS
Automation & Process Control Specialists

CALCON SYSTEMS, INC.
12919 ALCOSTA BLVD, SUITE 9
SAN RAMON, CA 94583
TEL: 925-277-0665
WWW.CALCON.COM

DRAWN	JU	07/14/16
DESIGN	JD	07/14/16
CHECKED	JD	07/14/16
APPROVED	JD	07/14/16

FILE: 11765_1002.DWG

CLIENT: KIRTLAND AFB

JOB: 11765

LOCATION: ALBUQUERQUE, NEW MEXICO

TITLE: KIRTLAND AIR FORCE BASE
PILOT SYSTEM CONTROL PANEL

SINGLE LINE DIAGRAM

DRAWING NO. 1002 | REV 1 | SHEET 4 OF 15

Z:\CUSTOMERS\C_CUSTOMERS\CB&I\11765_KIRTLAND AFB PILOT SYSTEM\DRAWINGS\CALCON DWG FILES\11765_1002.DWG

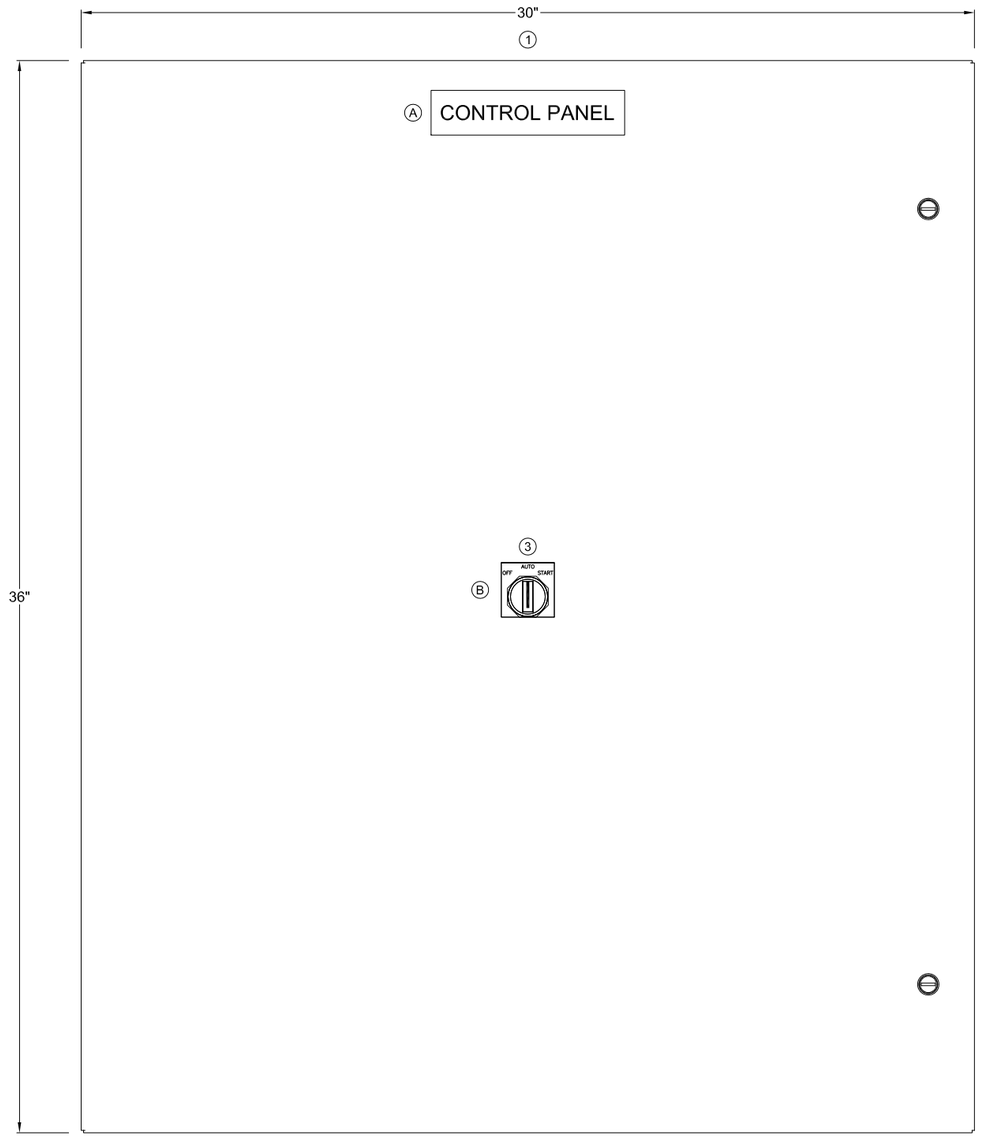

PILOT SYSTEM CONTROL PANEL ENCLOSURE ELEVATION - FRONT VIEW

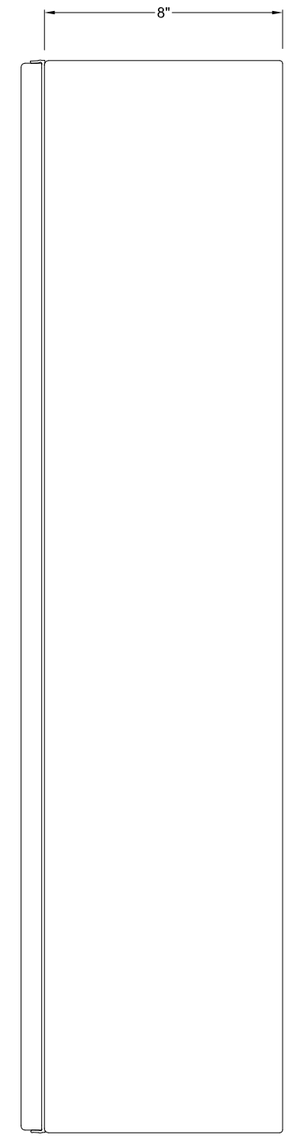

PILOT SYSTEM CONTROL PANEL ENCLOSURE ELEVATION - SIDE VIEW

LEGEND PLATE LIST

P1 = 1.50" x 6.50" Plate
R = Ring Type Legend Plate
White Text w/ Black Background

Tag #	Qty	Type	Engraving	Letter Size
A	1	P1	CONTROL PANEL	1/4"
B	1	R	OFF-AUTO-START	3/16"

REV	DESCRIPTION	DATE	NAME
1	INITIAL RELEASE	07/14/16	JU

CALCON SYSTEMS
Automation & Process Control Specialists

CALCON SYSTEMS, INC.
12919 ALCOSTA BLVD, SUITE 9
SAN RAMON, CA 94583
TEL: 925-277-0665
WWW.CALCON.COM

DRAWN	JU	07/14/16
DESIGN	JD	07/14/16
CHECKED	JD	07/14/16
APPROVED	JD	07/14/16

FILE: 11765_1010.DWG

CLIENT: KIRTLAND AFB
JOB: 11765
LOCATION: ALBUQUERQUE, NEW MEXICO

TITLE: KIRTLAND AIR FORCE BASE
PILOT SYSTEM CONTROL PANEL
ENCLOSURE LAYOUT

DRAWING NO. 1010 | REV 1 | SHEET 5 OF 15

Z:\CUSTOMERS\C_CUSTOMERS\CB&I\11765_KIRTLAND AFB PILOT SYSTEM\DRAWINGS\CALCON DWG FILES\11765_1010.DWG

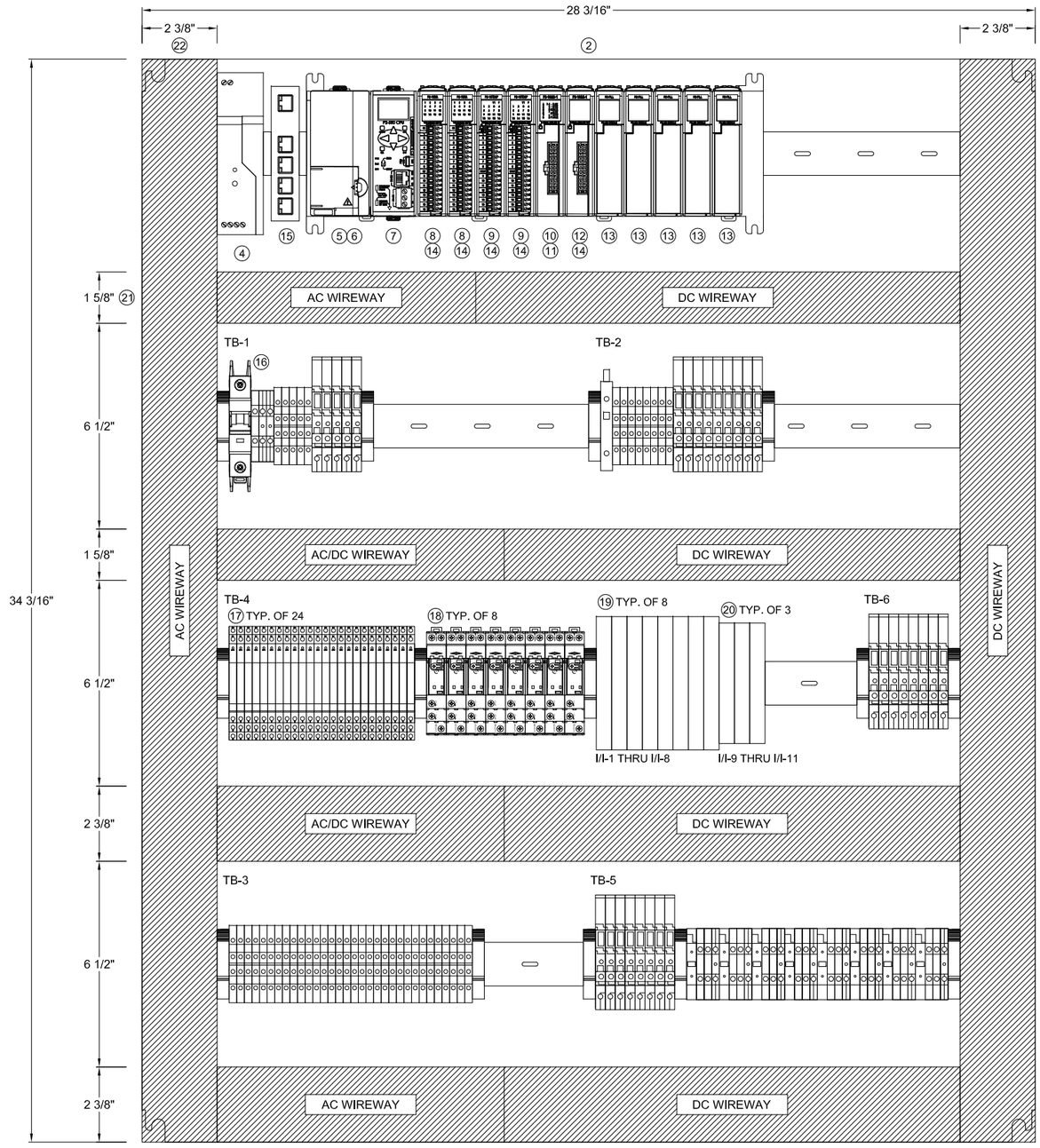

PILOT SYSTEM CONTROL PANEL BACKPLATE ELEVATION - FRONT VIEW

BILL OF MATERIALS

ITEM #	QTY	PART NO.	MANUFACTURER	DESCRIPTION	SHOWN ON DWG. #
1	1	CSD36308	HOFFMAN	ENCLOSURE, 36"(H) x 24.25"(W) x 10"(D), WALL MOUNT, QUICK-RELEASE LATCH, TYPE 4X	1010
2	1	CP3630	HOFFMAN	BACKPLATE, 34.2"(H) x 28.2" (W), WHITE	1011
3	1	800H-JR5A	ALLEN-BRADLEY	SELECTOR SWITCH, 3-POSITION, SPRING RTN FROM RIGHT	1010
4	1	2904376	PHOENIX CONTACT	24VDC POWER SUPPLY, 6.25A OUTPUT, 100-240VAC INPUT	1011
5	1	P2-11B	AUTOMATION DIRECT	PLC 11-SLOT BASE	1011
6	1	P2-01AC	AUTOMATION DIRECT	PLC POWER SUPPLY, 100-240VAC INPUT PWR	1011
7	1	P2-550	AUTOMATION DIRECT	PLC CPU, ETHERNET, USB, RS232	1011
8	2	P2-16ND3	AUTOMATION DIRECT	16 PT DC INPUT MODULE, 100-240VAC INPUTS	1011
9	2	P2-16TD2P	AUTOMATION DIRECT	16 PT 24VDC OUTPUT MODULE	1011
10	1	P2-16AD-1	AUTOMATION DIRECT	16-CH CURRENT ANALOG INPUT MODULE, 0-20mA, 16 BIT	1011
11	1	ZL-P2-CBL24-2P	AUTOMATION DIRECT	ZIPLINK I/O CABLE, 24 PIN TO PIGTAIL, 6.6FT	1011
12	1	P2-08DA-1	AUTOMATION DIRECT	8-CH CURRENT ANALOG OUTPUT MODULE, 0-20mA, 16 BIT	1011
13	5	P2-FILL	AUTOMATION DIRECT	FILLER MODULE	1011
14	5	P2-R2B	AUTOMATION DIRECT	MODULE CONNECTOR, 18-PIN, SCREW	1011
15	1	32025-8	COMTROL	ETHERNET SWITCH, 5-PORT, UNMANAGED, 24VDC INPUT PWR	1011
16	1	FAZ-D15-1-NA-SP	EATON	CIRCUIT BREAKER, 15A, 1-POLE, D-CURVE	1011
17	24	38.51.7.024.0050	FINDER	38 SERIES RELAY, 24VDC COIL, SPDT, 6A	1011
18	8	4C.01.9.024.0050	FINDER	4C SERIES RELAY, 24VDC COIL, SPDT, 15A	1011
19	8	KCD2-STC-EX1	PEPPERL+FUCHS	INTRINSICALLY SAFE BARRIER, ANALOG INPUT, 24VDC INPUT PWR	1011
20	3	2865434	PHOENIX CONTACT	INTRINSICALLY SAFE BARRIER, DIGITAL INPUT, 24VDC INPUT PWR	1011
21	LOT	T1E-1540W	IBOCO	WIREWAY, 1.5" (W) x 4.0" (D), WHITE	1011
22	LOT	T1E-2240W	IBOCO	WIREWAY, 2.25" (W) x 4.0" (D), WHITE	1011

REV	DESCRIPTION	DATE	NAME
1	INITIAL RELEASE	07/14/16	JU

CALCON SYSTEMS
Automation & Process Control Specialists

CALCON SYSTEMS, INC.
12919 ALCOSTA BLVD, SUITE 9
SAN RAMON, CA 94583
TEL: 925-277-0665
WWW.CALCON.COM

DRAWN	JU	07/14/16
DESIGN	JD	07/14/16
CHECKED	JD	07/14/16
APPROVED	JD	07/14/16

FILE: 11765_1010.DWG

CLIENT: KIRTLAND AFB
JOB: 11765
LOCATION: ALBUQUERQUE, NEW MEXICO

TITLE: KIRTLAND AIR FORCE BASE
PILOT SYSTEM CONTROL PANEL
BACKPLATE LAYOUT

DRAWING NO. 1011 | REV 1 | SHEET 6 OF 15

Z:\CUSTOMERS\C_CUSTOMERS\CB&I\11765_KIRTLAND AFB PILOT SYSTEM\DRAWINGS\CALCON DWG FILES\11765_1010.DWG

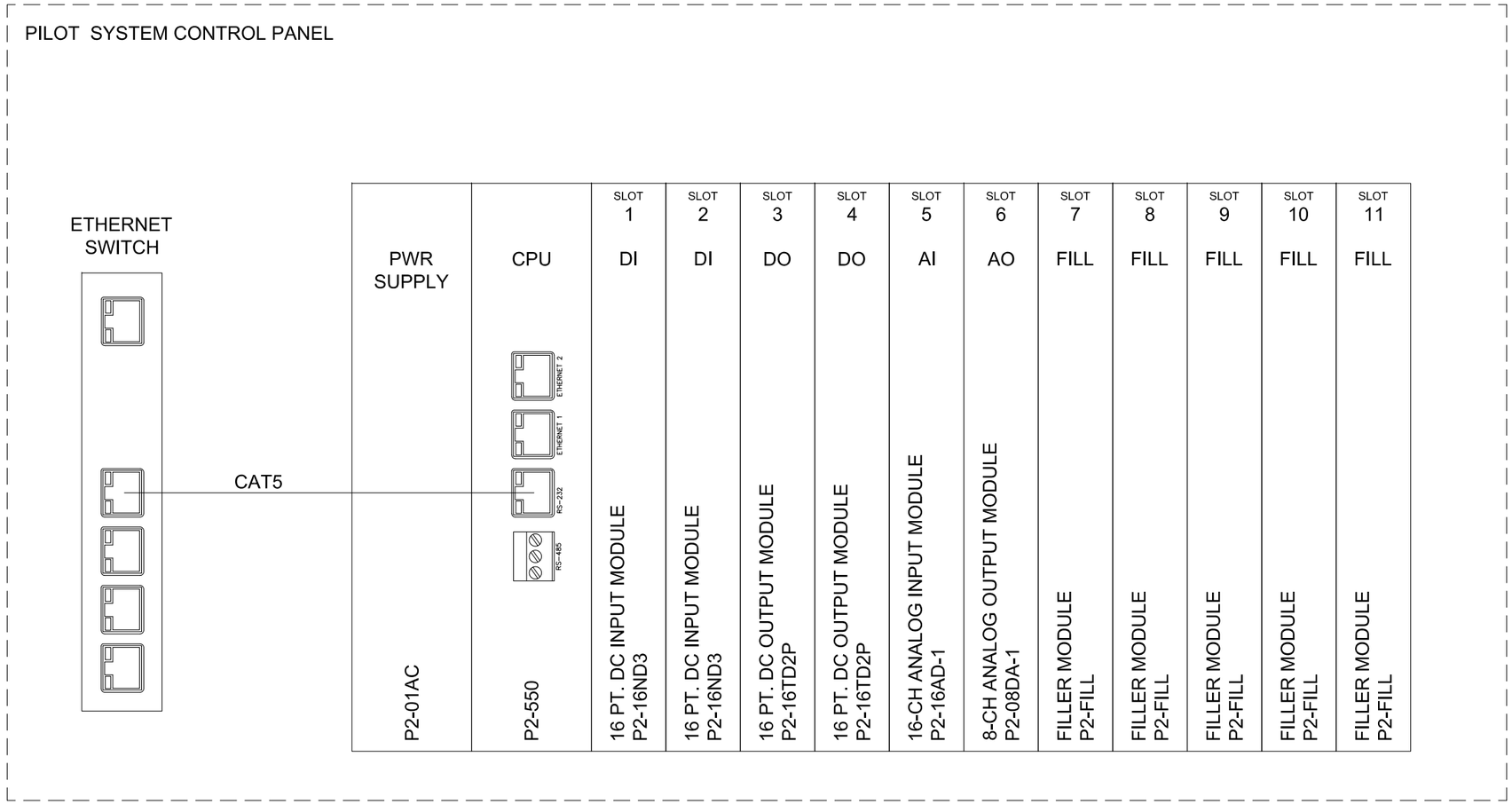

REV	DESCRIPTION	DATE	NAME
1	INITIAL RELEASE	07/14/16	JU

CALCON SYSTEMS
Automation & Process Control Specialists

CALCON SYSTEMS, INC.
12919 ALCOSTA BLVD, SUITE 9
SAN RAMON, CA 94583
TEL: 925-277-0665
WWW.CALCON.COM

DRAWN	JU	07/14/16
DESIGN	JD	07/14/16
CHECKED	JD	07/14/16
APPROVED	JD	07/14/16

FILE: 11765_1012.DWG

CLIENT: KIRTLAND AFB
JOB: 11765
LOCATION: ALBUQUERQUE, NEW MEXICO

TITLE: KIRTLAND AIR FORCE BASE
PILOT SYSTEM CONTROL PANEL
SYSTEM NETWORK DIAGRAM / PLC MODULE LAYOUT

DRAWING NO. 1012 | REV 1 | SHEET 7 OF 15

Z:\CUSTOMERS\C_CUSTOMERS\CB&I\11765_KIRTLAND AFB PILOT SYSTEM\DRAWINGS\CALCON DWG FILES\11765_1012.DWG

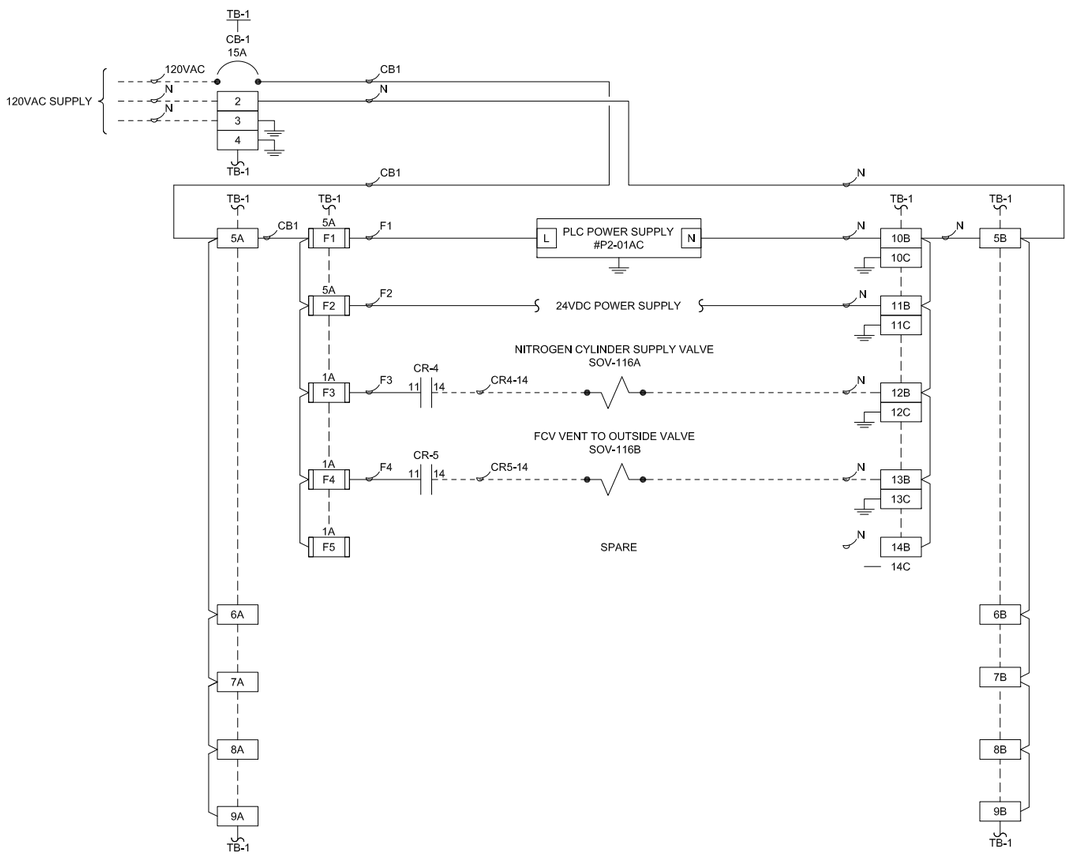

SECTION INTENTIONALLY LEFT BLANK

REV	DESCRIPTION	DATE	NAME
1	INITIAL RELEASE	07/14/16	JU

CALCON SYSTEMS
Automation & Process Control Specialists

CALCON SYSTEMS, INC.
12919 ALCOSTA BLVD, SUITE 9
SAN RAMON, CA 94583
TEL: 925-277-0665
WWW.CALCON.COM

DRAWN	JU	07/14/16
DESIGN	JD	07/14/16
CHECKED	JD	07/14/16
APPROVED	JD	07/14/16

FILE: 11765_1020.DWG

CLIENT: KIRTLAND AFB
JOB: 11765
LOCATION: ALBUQUERQUE, NEW MEXICO

TITLE: KIRTLAND AIR FORCE BASE
PILOT SYSTEM CONTROL PANEL
120VAC POWER DISTRIBUTION

DRAWING NO. 1020
REV 1
SHEET 8 OF 15

Z:\CUSTOMERS\C_CUSTOMERS\CB&I\11765_KIRTLAND AFB PILOT SYSTEM\DRAWINGS\CALCON DWG FILES\11765_1020.DWG

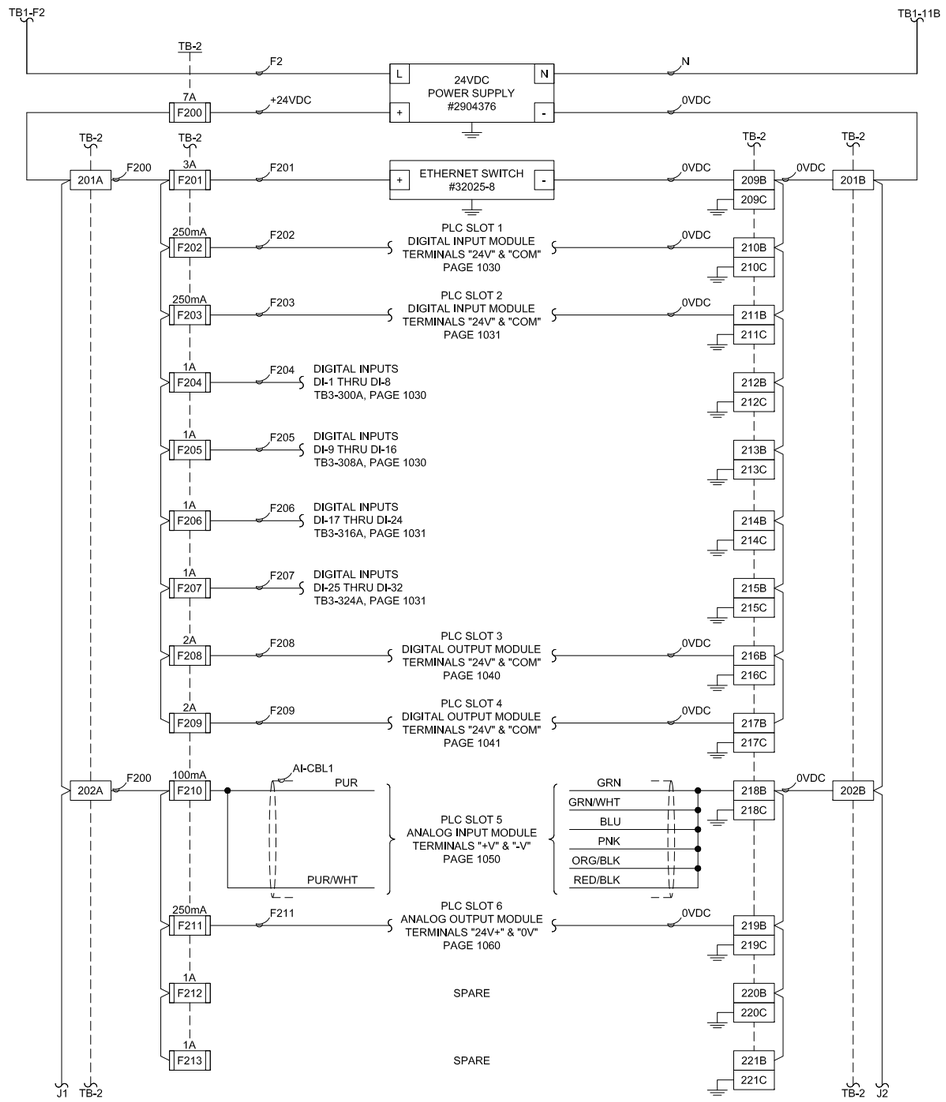

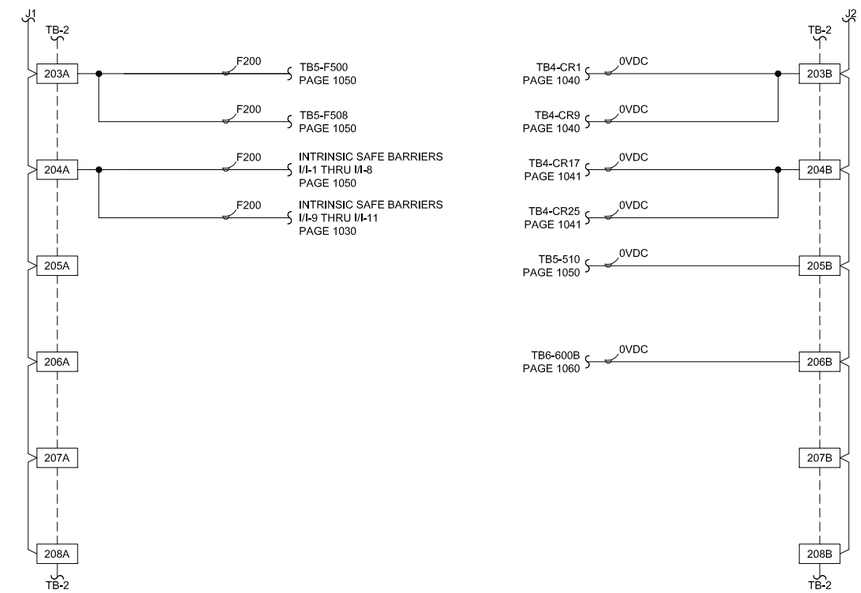

REV	DESCRIPTION	DATE	NAME
1	INITIAL RELEASE	07/14/16	JU

CALCON SYSTEMS
Automation & Process Control Specialists

CALCON SYSTEMS, INC.
12919 ALCOSTA BLVD, SUITE 9
SAN RAMON, CA 94583
TEL: 925-277-0665
WWW.CALCON.COM

DRAWN	JU	07/14/16
DESIGN	JD	07/14/16
CHECKED	JD	07/14/16
APPROVED	JD	07/14/16

FILE: 11765_1020.DWG

CLIENT: KIRTLAND AFB
JOB: 11765
LOCATION: ALBUQUERQUE, NEW MEXICO

TITLE: KIRTLAND AIR FORCE BASE
PILOT SYSTEM CONTROL PANEL
24VDC POWER DISTRIBUTION

DRAWING NO. 1021 | REV 1 | SHEET 9 OF 15

Z:\CUSTOMERS\C_CUSTOMERS\CB&I\11765_KIRTLAND AFB PILOT SYSTEM\DRAWINGS\CALCON DWG FILES\11765_1020.DWG

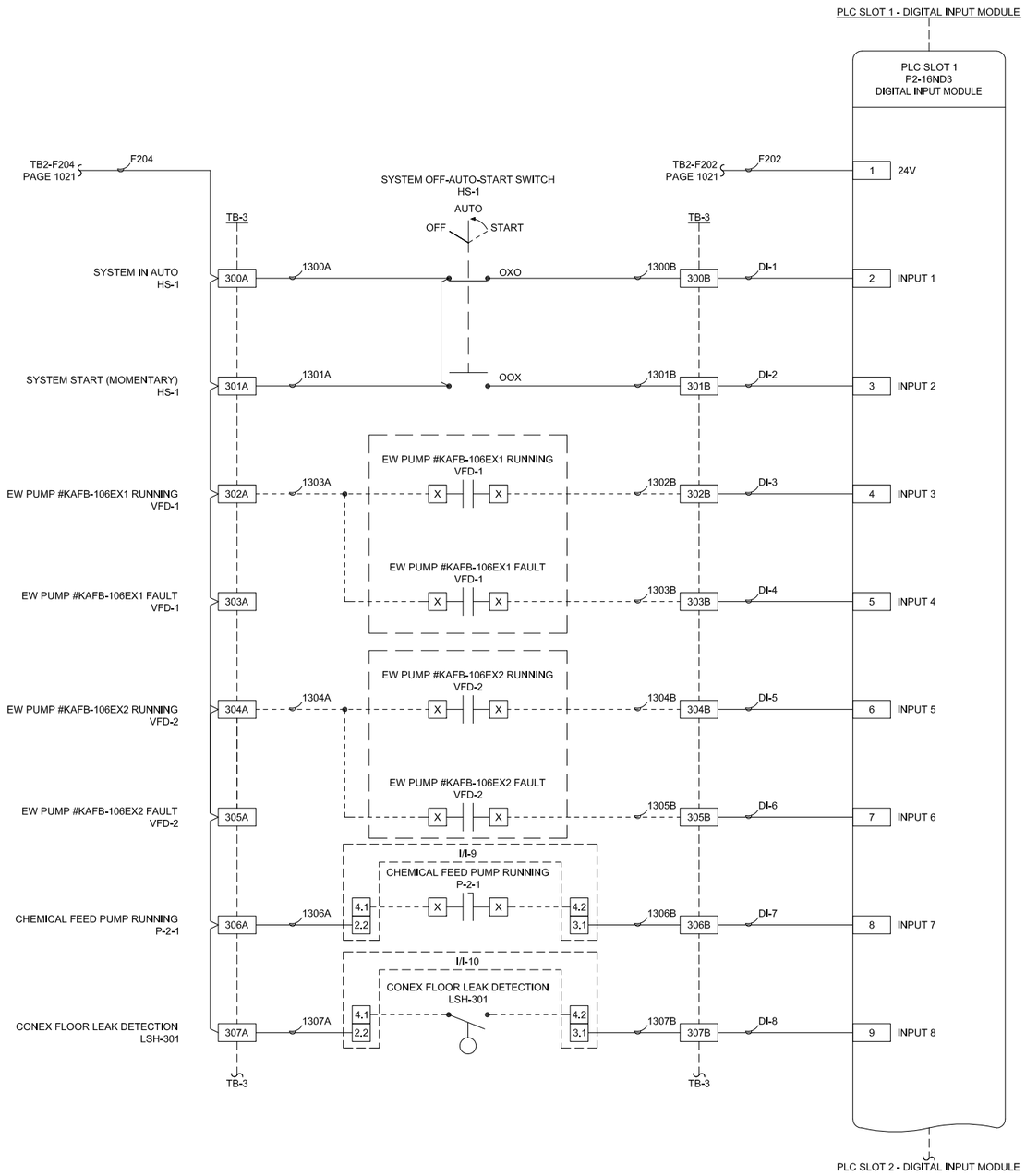

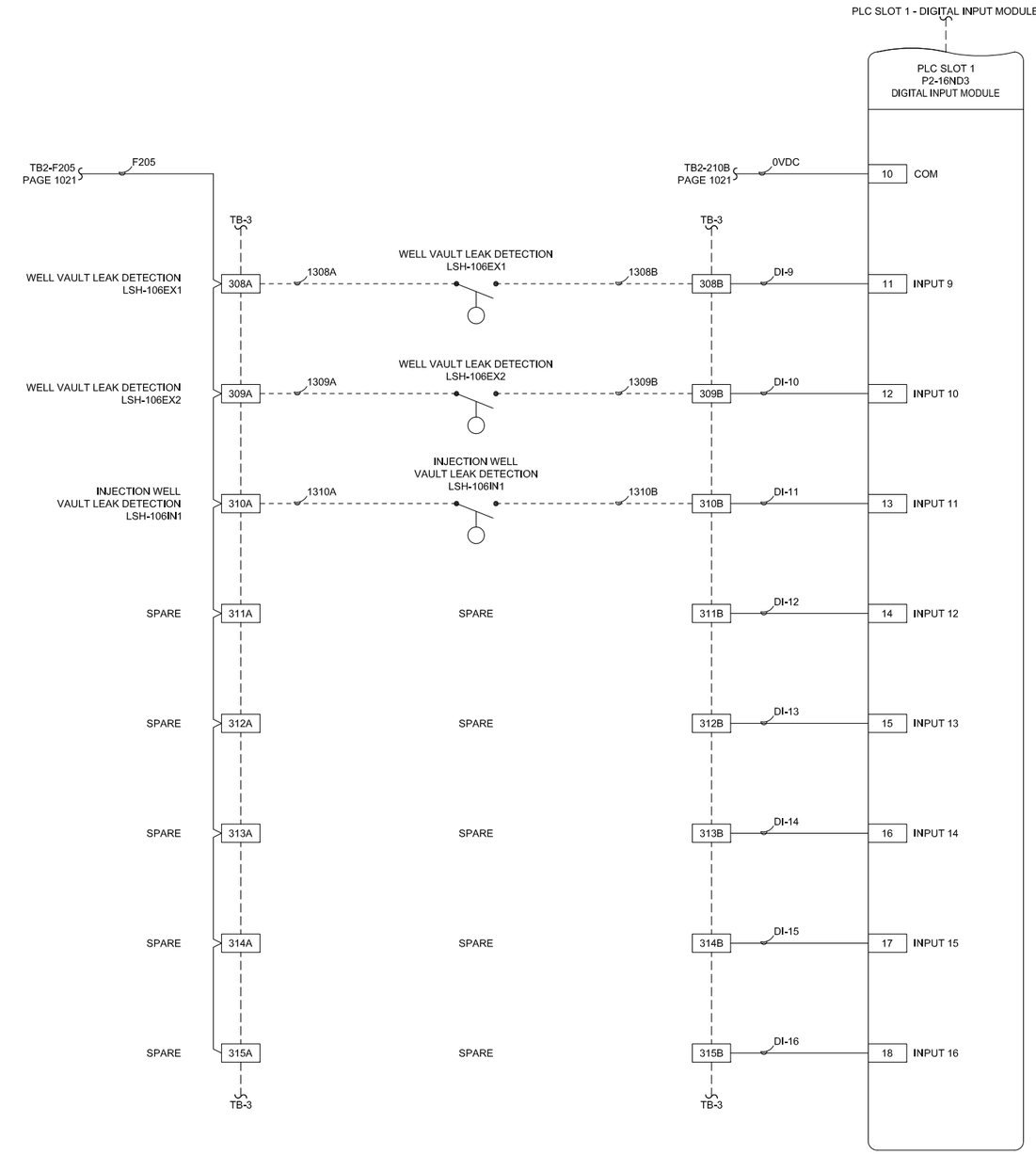

REV	DESCRIPTION	DATE	NAME
1	INITIAL RELEASE	07/14/16	JU

CALCON SYSTEMS
Automation & Process Control Specialists

CALCON SYSTEMS, INC.
12919 ALCOSTA BLVD, SUITE 9
SAN RAMON, CA 94583
TEL: 925-277-0665
WWW.CALCON.COM

DRAWN	JU	07/14/16
DESIGN	JD	07/14/16
CHECKED	JD	07/14/16
APPROVED	JD	07/14/16

FILE: 11765_1030.DWG

CLIENT: KIRTLAND AFB
JOB: 11765
LOCATION: ALBUQUERQUE, NEW MEXICO

TITLE: KIRTLAND AIR FORCE BASE
PILOT SYSTEM CONTROL PANEL
PLC SLOT 1 - 24VDC DIGITAL INPUT MODULE WIRING DIAGRAM

DRAWING NO. 1030 | REV 1 | SHEET 10 OF 15

Z:\CUSTOMERS\C_CUSTOMERS\CB&I\11765_KIRTLAND AFB PILOT SYSTEM\DRAWINGS\CALCON DWG FILES\11765_1030.DWG

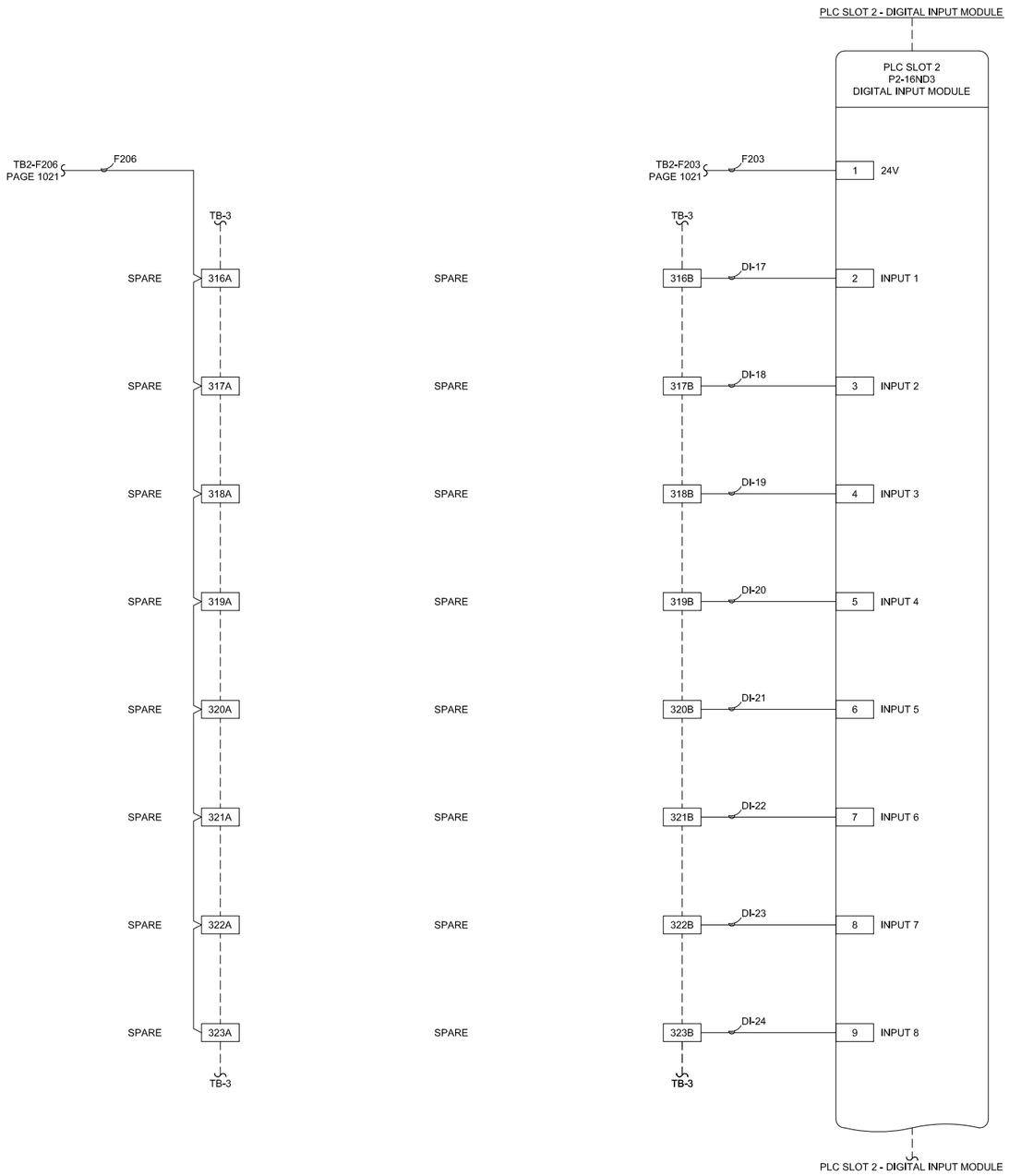

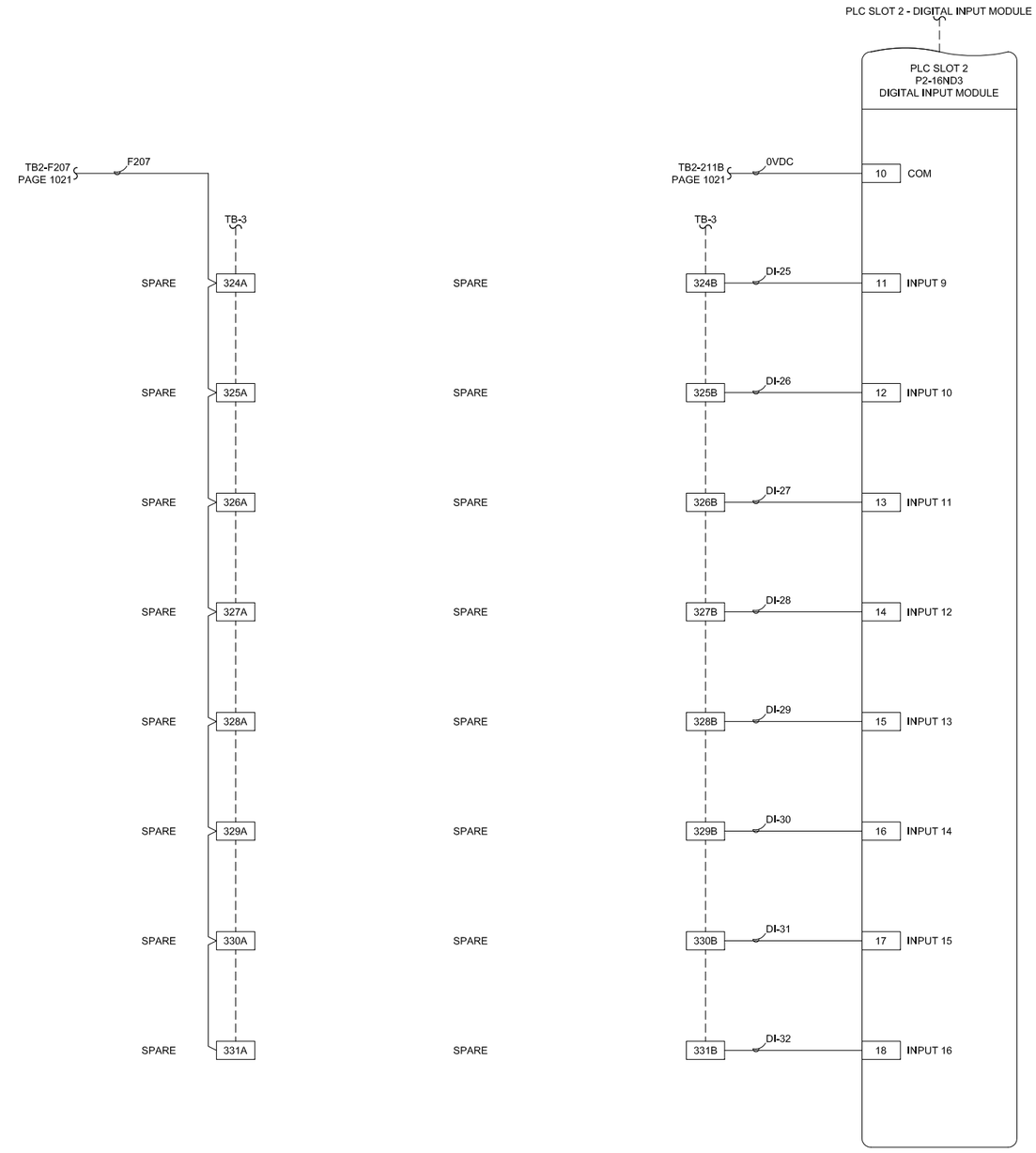

REV	DESCRIPTION	DATE	NAME
1	INITIAL RELEASE	07/14/16	JU

CALCON SYSTEMS
Automation & Process Control Specialists

CALCON SYSTEMS, INC.
12919 ALCOSTA BLVD, SUITE 9
SAN RAMON, CA 94583
TEL: 925-277-0665
WWW.CALCON.COM

DRAWN	JU	07/14/16
DESIGN	JD	07/14/16
CHECKED	JD	07/14/16
APPROVED	JD	07/14/16

FILE: 11765_1030.DWG

CLIENT: KIRTLAND AFB
JOB: 11765
LOCATION: ALBUQUERQUE, NEW MEXICO

TITLE: KIRTLAND AIR FORCE BASE
PILOT SYSTEM CONTROL PANEL
PLC SLOT 2 – 24VDC DIGITAL INPUT MODULE WIRING DIAGRAM

DRAWING NO. 1031 | REV 1 | SHEET 11 OF 15

Z:\CUSTOMERS\C_CUSTOMERS\CB&I\11765_KIRTLAND AFB PILOT SYSTEM\DRAWINGS\CALCON DWG FILES\11765_1030.DWG

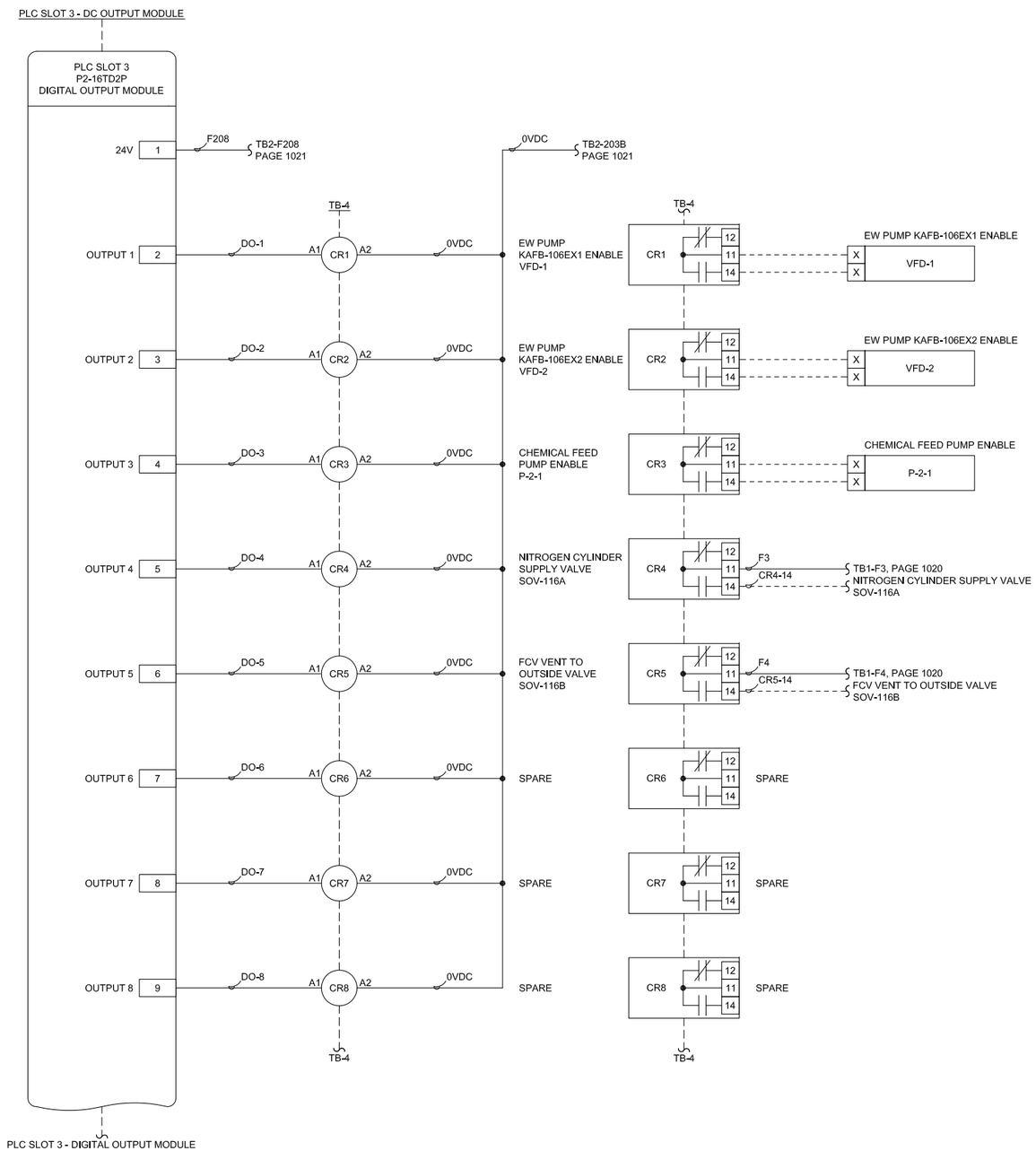

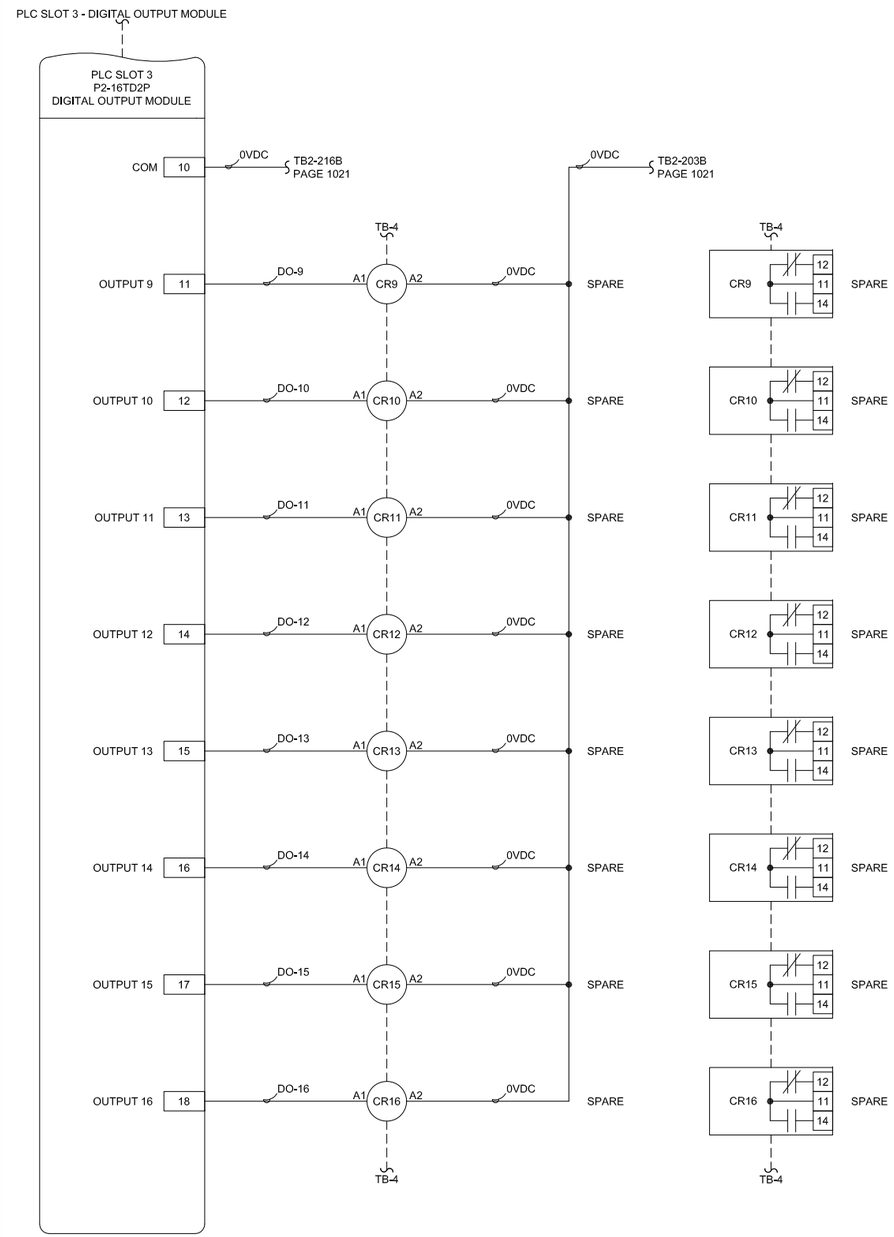

REV	DESCRIPTION	DATE	NAME
1	INITIAL RELEASE	07/14/16	JU

CALCON SYSTEMS
Automation & Process Control Specialists

CALCON SYSTEMS, INC.
12919 ALCOSTA BLVD, SUITE 9
SAN RAMON, CA 94583
TEL: 925-277-0665
WWW.CALCON.COM

DRAWN	JU	07/14/16
DESIGN	JD	07/14/16
CHECKED	JD	07/14/16
APPROVED	JD	07/14/16

FILE: 11765_1040.DWG

CLIENT: KIRTLAND AFB
JOB: 11765
LOCATION: ALBUQUERQUE, NEW MEXICO

TITLE: KIRTLAND AIR FORCE BASE
PILOT SYSTEM CONTROL PANEL
PLC SLOT 3 – DIGITAL OUTPUT MODULE WIRING DIAGRAM

DRAWING NO. 1040 | REV 1 | SHEET 12 OF 15

Z:\CUSTOMERS\C_CUSTOMERS\CB&I\11765_KIRTLAND AFB PILOT SYSTEM\DRAWINGS\CALCON DWG FILES\11765_1040.DWG

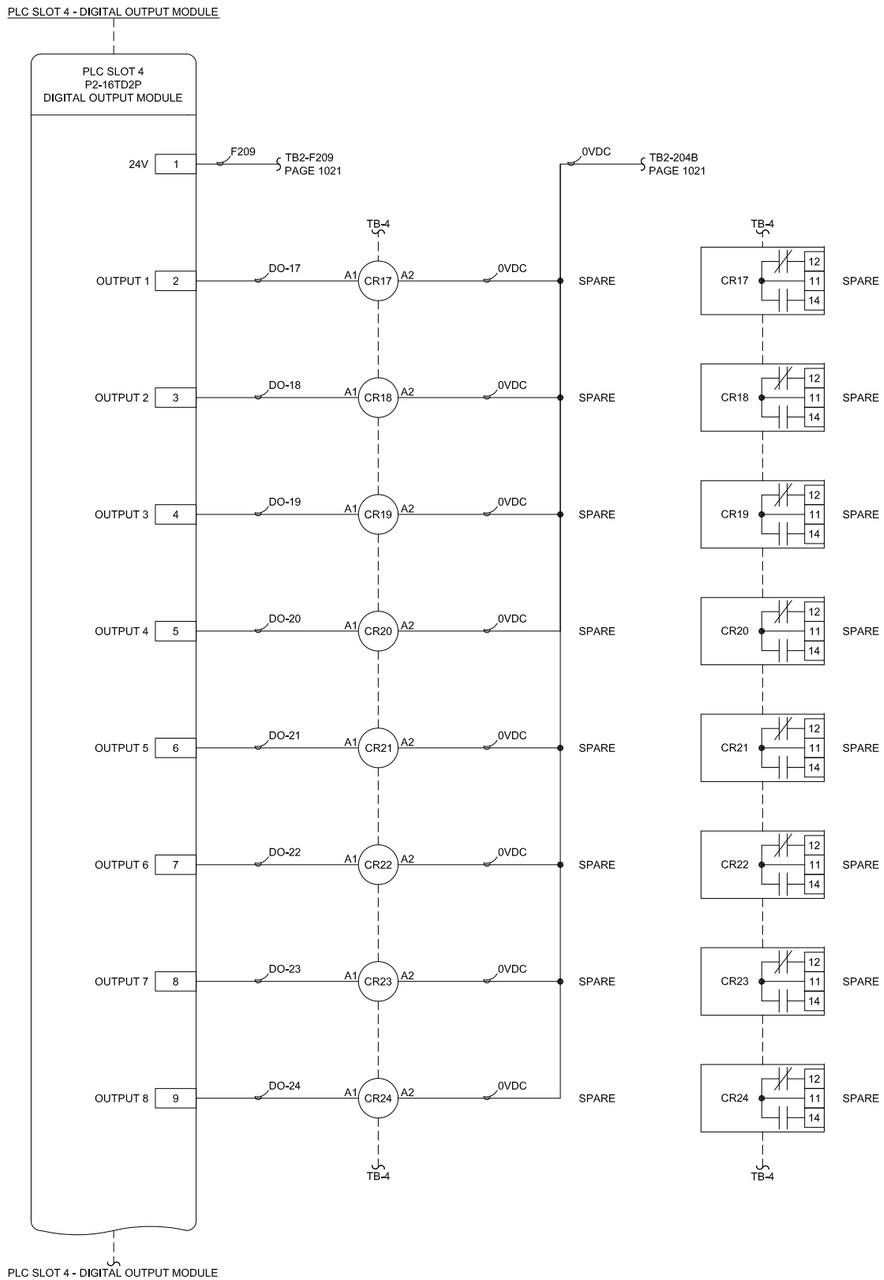

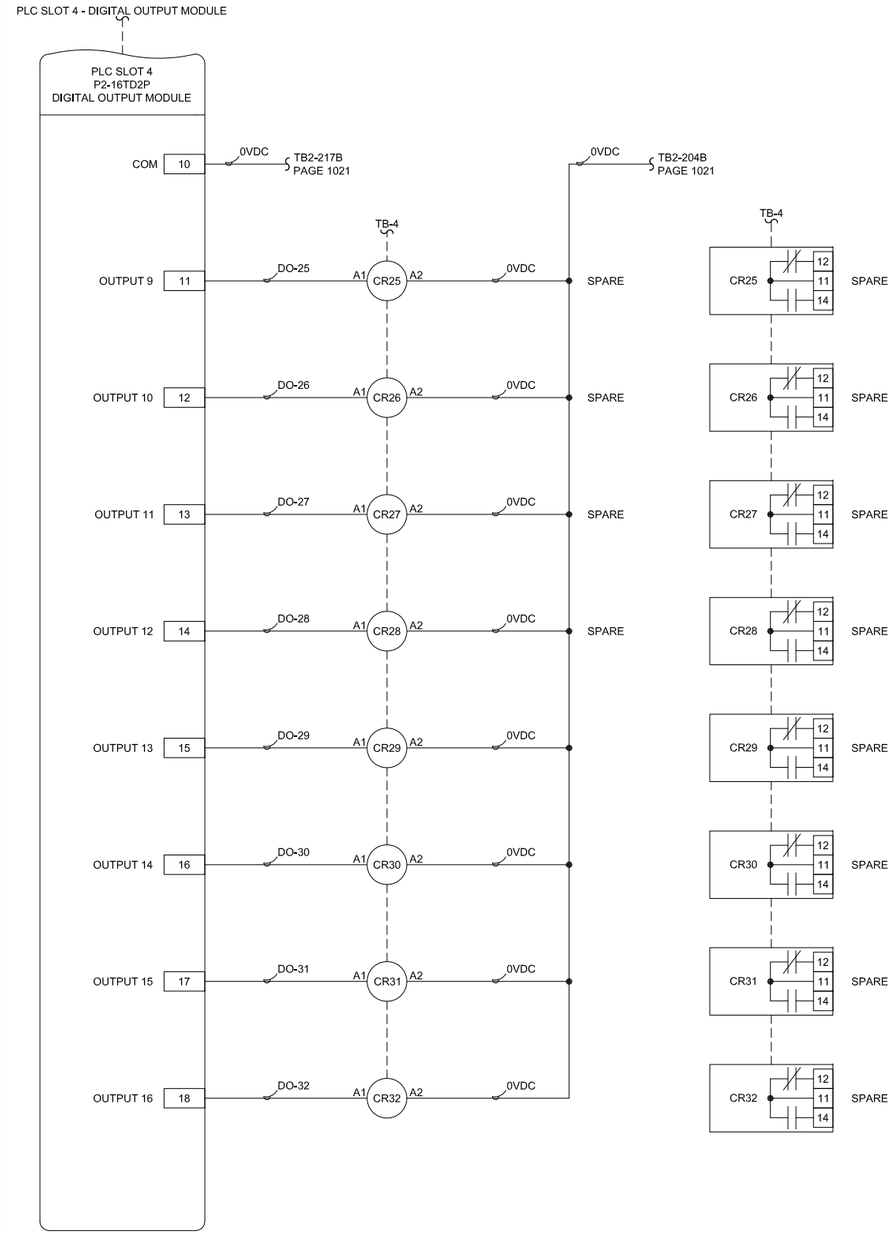

REV	DESCRIPTION	DATE	NAME
1	INITIAL RELEASE	07/14/16	JU

CALCON SYSTEMS
Automation & Process Control Specialists

CALCON SYSTEMS, INC.
12919 ALCOSTA BLVD, SUITE 9
SAN RAMON, CA 94583
TEL: 925-277-0665
WWW.CALCON.COM

DRAWN	JU	07/14/16
DESIGN	JD	07/14/16
CHECKED	JD	07/14/16
APPROVED	JD	07/14/16

FILE: 11765_1040.DWG

CLIENT: KIRTLAND AFB
JOB: 11765
LOCATION: ALBUQUERQUE, NEW MEXICO

TITLE: KIRTLAND AIR FORCE BASE
PILOT SYSTEM CONTROL PANEL
PLC SLOT 4 – DIGITAL OUTPUT MODULE WIRING DIAGRAM

DRAWING NO. 1041 | REV 1 | SHEET 13 OF 15

Z:\CUSTOMERS\C_CUSTOMERS\CB&I\11765_KIRTLAND AFB PILOT SYSTEM\DRAWINGS\CALCON DWG FILES\11765_1040.DWG

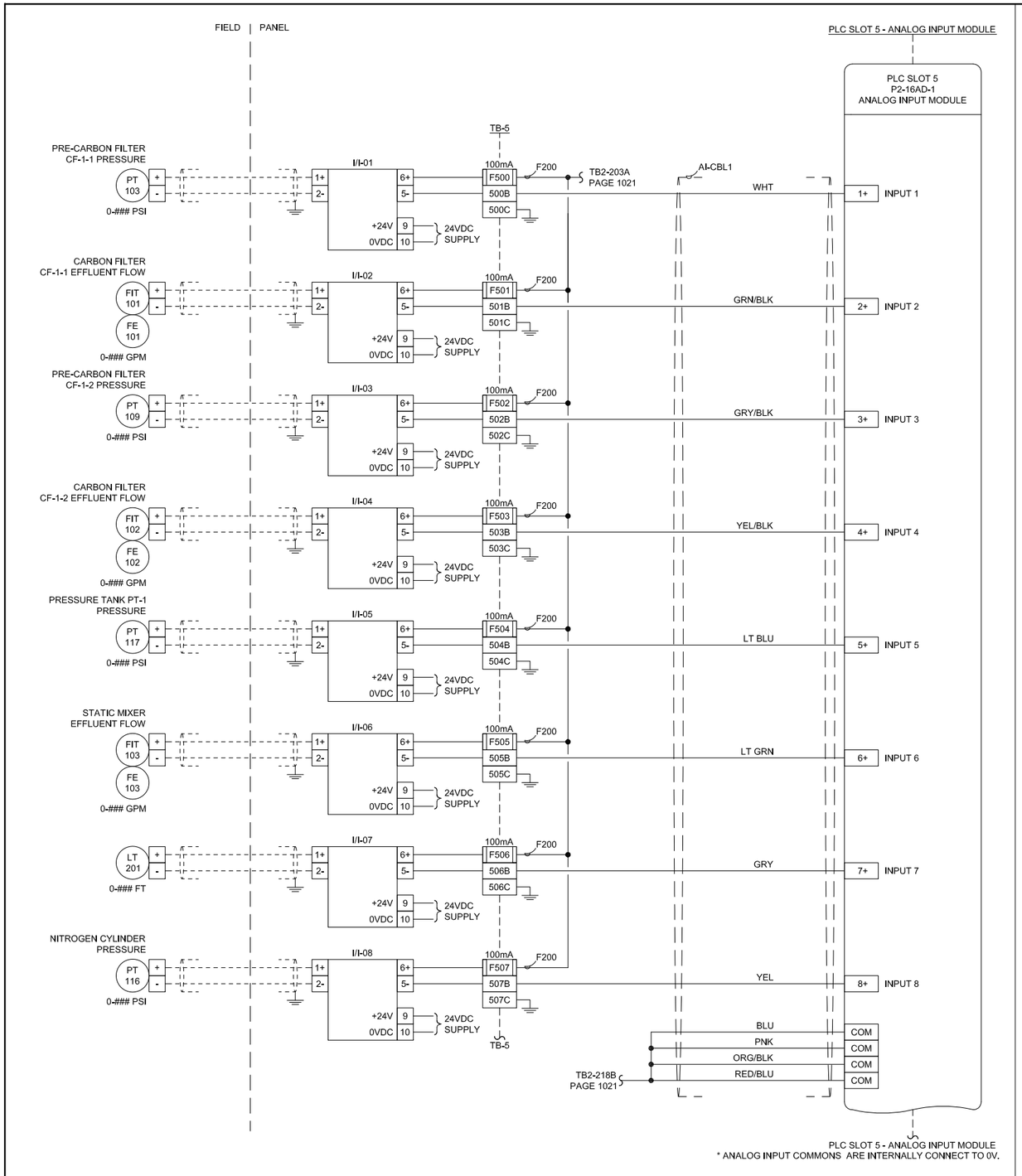

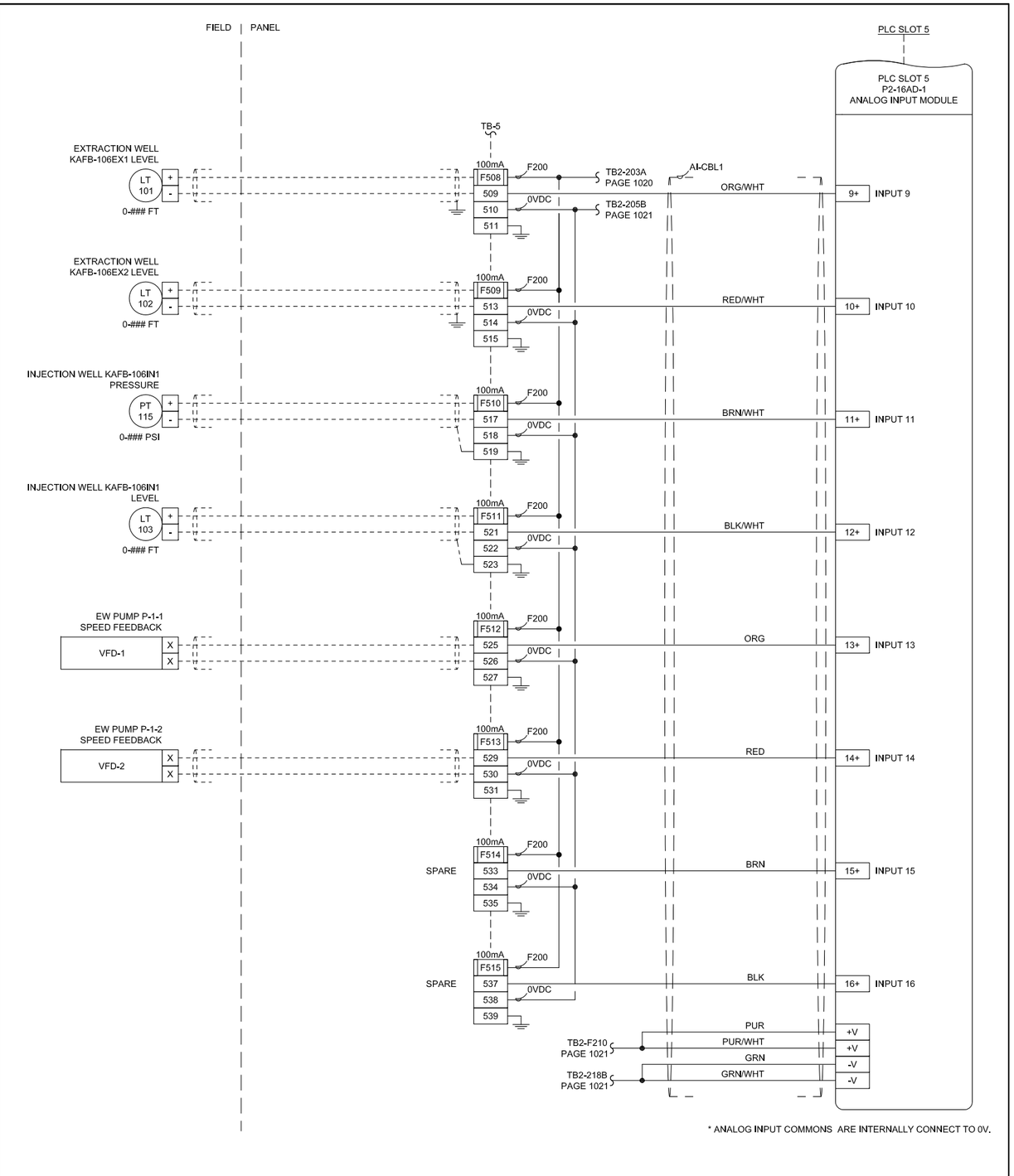

REV	DESCRIPTION	DATE	NAME
1	INITIAL RELEASE	07/14/16	JU

CALCON SYSTEMS
Automation & Process Control Specialists

CALCON SYSTEMS, INC.
12919 ALCOSTA BLVD, SUITE 9
SAN RAMON, CA 94583
TEL: 925-277-0665
WWW.CALCON.COM

DRAWN	JU	07/14/16
DESIGN	JD	07/14/16
CHECKED	JD	07/14/16
APPROVED	JD	07/14/16

FILE: 11765_1050.DWG

CLIENT: KIRTLAND AFB
JOB: 11765
LOCATION: ALBUQUERQUE, NEW MEXICO

TITLE: KIRTLAND AIR FORCE BASE
PILOT SYSTEM CONTROL PANEL
PLC SLOT 5 - ANALOG INPUT MODULE WIRING DIAGRAM

DRAWING NO. 1050 | REV 1 | SHEET 14 OF 15

Z:\CUSTOMERS\C_CUSTOMERS\CB&I\11765_KIRTLAND AFB PILOT SYSTEM\DRAWINGS\CALCON DWG FILES\11765_1050.DWG

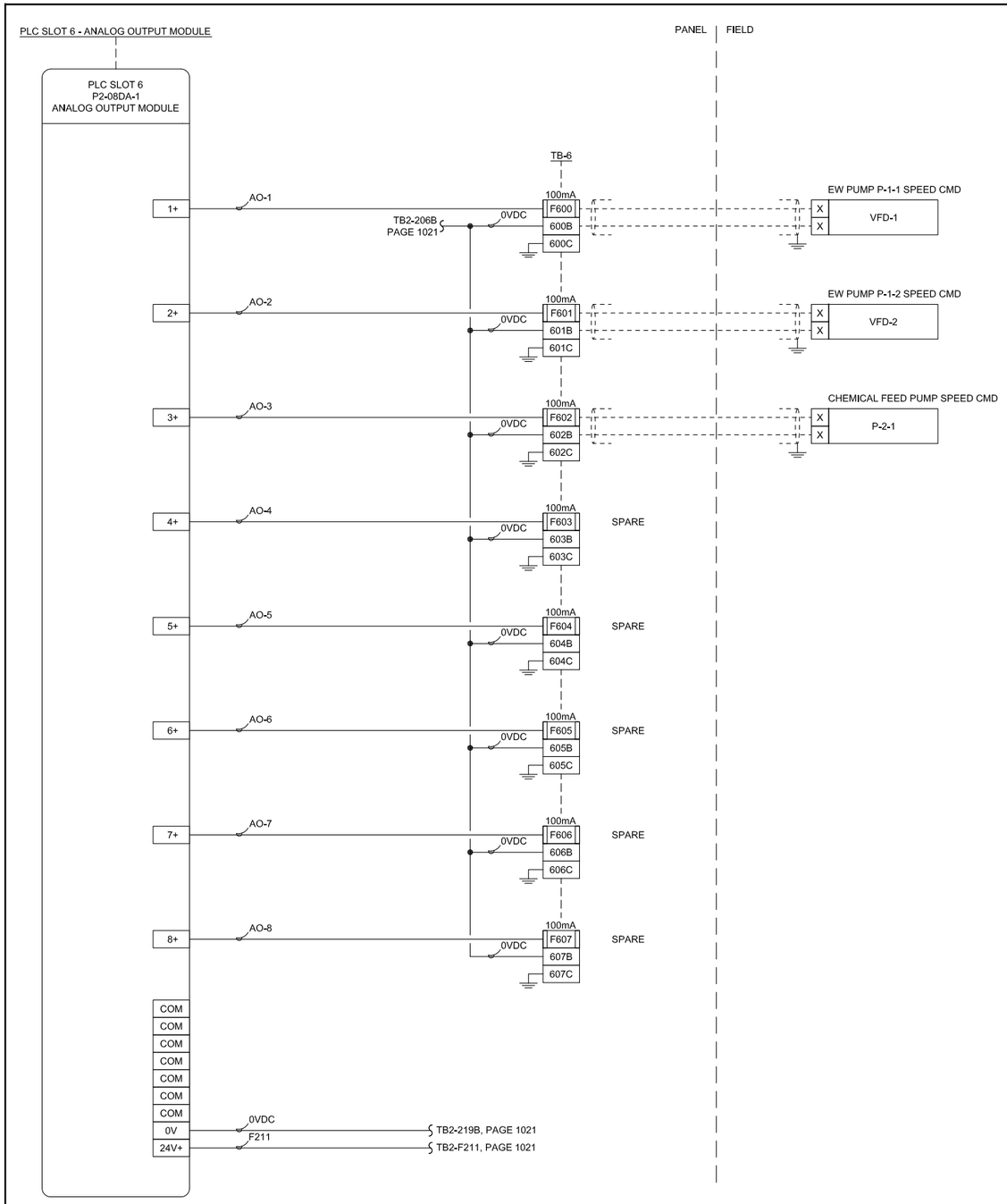

* ANALOG OUTPUT COMMONS ARE INTERNALLY CONNECT TO 0V.

SECTION INTENTIONALLY LEFT BLANK

REV	DESCRIPTION	DATE	NAME
1	INITIAL RELEASE	07/14/16	JU

CALCON SYSTEMS
Automation & Process Control Specialists

CALCON SYSTEMS, INC.
12919 ALCOSTA BLVD, SUITE 9
SAN RAMON, CA 94583
TEL: 925-277-0665
WWW.CALCON.COM

DRAWN	JU	07/14/16
DESIGN	JD	07/14/16
CHECKED	JD	07/14/16
APPROVED	JD	07/14/16

FILE: 11765_1060.DWG

CLIENT: KIRTLAND AFB
JOB: 11765
LOCATION: ALBUQUERQUE, NEW MEXICO

TITLE: KIRTLAND AIR FORCE BASE
PILOT SYSTEM CONTROL PANEL
PLC SLOT 6 – ANALOG OUTPUT MODULE WIRING DIAGRAM

DRAWING NO. 1060 | REV 1 | SHEET 15 OF 15

Z:\CUSTOMERS\C_CUSTOMERS\CB&I\11765_KIRTLAND AFB PILOT SYSTEM\DRAWINGS\CALCON DWG FILES\11765_1060.DWG

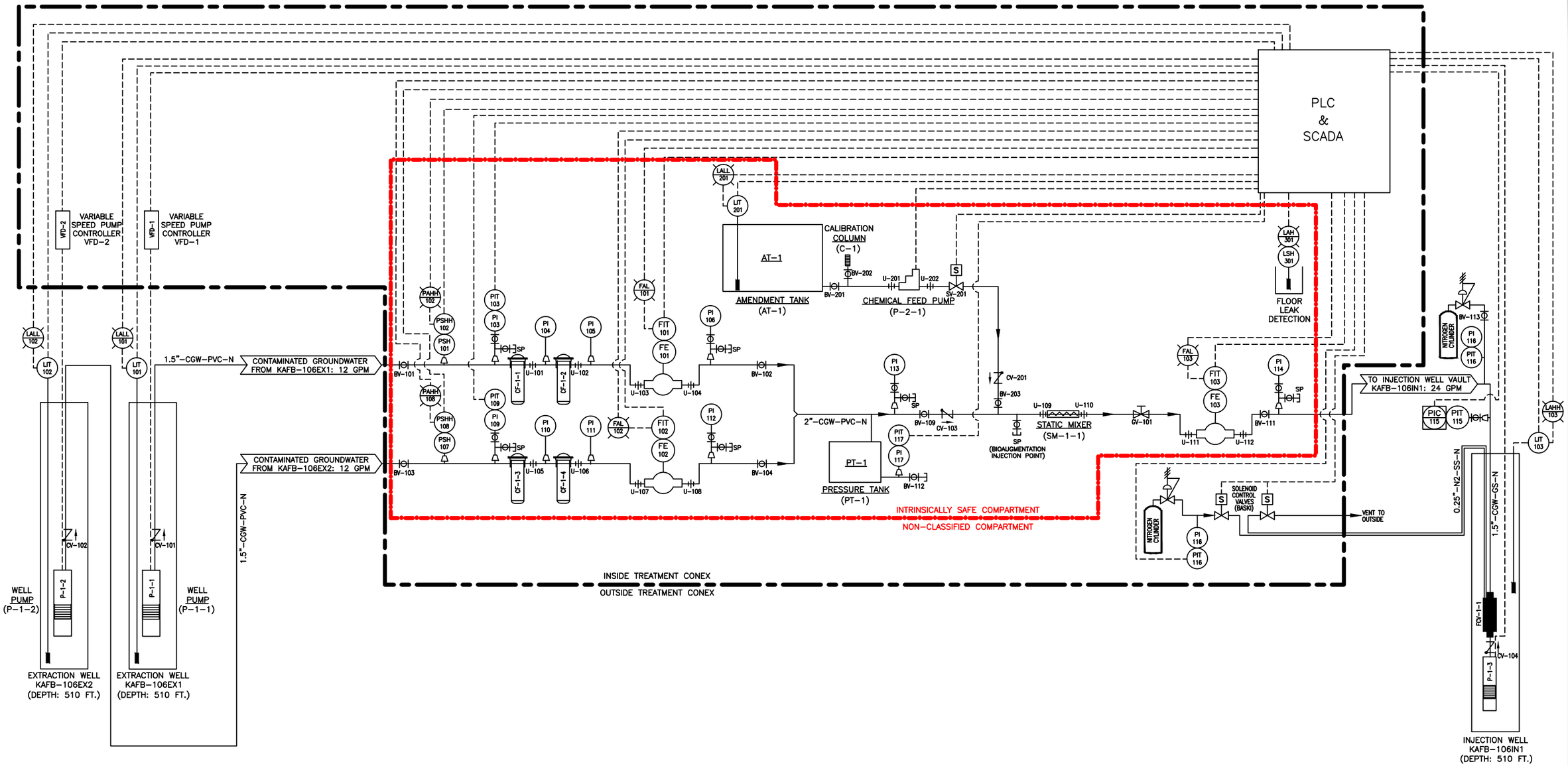

P-1-1, P-1-2 EXTRACTION WELL PUMP	VFD-1, VFD-2 PUMP CONTROLLER	FIQ-101, FIQ-102, FIQ-103 FLOW METER	PT-1 PRESSURE TANK	AT-1 AMENDMENT TANK	P-3-1 CHEMICAL FEED PUMP	PIT-111 PRESSURE TRANSMITTER	FCV-1-1 FLOW CONTROL VALVE	P-1-3 INJECTION WELL PUMP
TYPE: SUBMERSIBLE FLOW: 15GPM@575' MOTOR:FRANKLIN,5HP,460V,3PH MODEL: 25S50-26 (Teflon) MFR: GRUNDFOS	TYPE: 60HZ FREQ CONVERTER ENCLOSURE: IP55, A5 ELECTRIC: 3X440-500V MODEL: CUE (part#91136938) MFR: GRUNDFOS	TYPE: ELECTROMAGNETIC INLET PIPE SIZE: 1" FLANGE MODEL: M-3000 SERIES SERIAL: MFR: BADGER METER INC.	TYPE: DIAPHRAGM TANK VOLUME: 31.8 GAL PRE-CHARGE: 12 PSI INLET: 1" NPTF MODEL: V100 MFR: GOULDS	TYPE: VERTICAL POLY TANK DIMENSIONS: 52"x66",550GAL OUTLET: 2" BULKHEAD MODEL: NTO (VT0550-52) MFR: ACE ROTO-MOLD	TYPE: ELECTRONIC METERING CAPACITY: 2.5 GPH, 150 PSI VOLTAGE: 120 VAC MODEL: E71 MFR: LMI	TYPE: INTRINSICALLY SAFE RANGE: 1-30 PSI SETPOINT: 5-10 PSI MODEL: 2088 MFR: ROSEMOUNT	TYPE: PNEUMATIC SIZE: 4" OD MODEL: INFLEX FCV MFR: BASKI INCLUDES CONTROL PANEL WITH NITROGEN REGULATOR	TYPE: SUBMERSIBLE FLOW: 3GPM@550' MOTOR: 1HP,230V,8.1A MODEL: 5SQE10-410 (Teflon) MFR: GRUNDFOS

CB&I Federal Services
17 Princess Road
Lawrenceville, New Jersey 08648

U.S. ARMY CORPS OF ENGINEERS
OMAHA DISTRICT
OMAHA, NEBRASKA

APPENDIX A

RECIRCULATION AND AMENDMENT SYSTEM PIPING AND INSTRUMENTATION DIAGRAM

IN-SITU EDB BIOREMEDIATION PILOT TEST
KIRTLAND AFB, NEW MEXICO

OFFICE	DATE	DESIGNED BY	DRAWN BY	CHECKED BY	APPROVED BY	DRAWING NUMBER
Lawrenceville, NJ	9/7/16	G.Lavorgna	G.Lavorgna	S.Sheely	P.KostervanGroos	500433-D1

File: C:\Users\zeke.carpio\appdata\local\temp\AcPublish_7708\500433-D1.dwg
Plot Date/Time: Apr 17, 2017 - 9:15am
Plotted By: zeke.carpio
Xref :
Image :

OFFICE	DATE	DESIGNED BY	DRAWN BY	CHECKED BY	APPROVED BY	DRAWING NUMBER
Lawrenceville, NJ	9/7/16	G.Lavorgna	G.Lavorgna	S.Sheely	P.KostervanGroos	500433-D1

VALVE AND PIPING SYMBOLS

- GLOBE VALVE
- GATE VALVE
- BUTTERFLY VALVE
- SPRING CHECK VALVE
- CHECK VALVE
- PLUG VALVE
- 3-WAY VALVE
- ANGLE VALVE
- RELIEF OR SAFETY VALVE
- DIAPHRAGM VALVE
- BALL VALVE NC
- BALL VALVE NO
- GLOBE VALVE
- SELF-CONTAINED PRESSURE REGULATING VALVE W/RELIEF
- SELF-CONTAINED PRESSURE REGULATING VALVE AND FILTER W/RELIEF
- FILTER
- KNIFE GATE VALVE
- **FLOAT VENT VALVE**
- BP BACKFLOW PREVENTER
- SP SAMPLE PORT
- **FLEXIBLE HOSE**
- **EXPANSION JOINT**
- BASKET TYPE STRAINER
- Y-TYPE STRAINER
- T STEAM TRAP
- DUPLEX STRAINER
- SLEEVE COUPLING (SC)
- FLOOR DRAIN
- EQUIPMENT DRAIN
- CLEANOUT (CO)
- REMOVABLE PLUG
- REMOVABLE CAP
- BF BLIND FLANGE
- EXHAUST TO ATMOSPHERE (INSIDE)
- EXHAUST TO ATMOSPHERE (OUTSIDE)
- REDUCER
- UNION
- C QUICK DISCONNECT COUPLING
- GAUGE SEAL
- DAMPER
- SILENCER

VALVE OPERATOR SYMBOLS

- S SOLENOID
- M MOTOR, ELECTRIC
- DIAPHRAGM WITH POSITIONER
- T HANDWHEEL OR LEVER

PRIMARY ELEMENT SYMBOLS – FLOW

- ORIFICE PLATE
- PITOT TUBE
- AVERAGING PITOT TUBE
- SIGHT TUBE
- TOTALIZING FLOWMETER
- POSITIVE DISPLACEMENT FLOW METER
- WEIR
- TURBINE OR PROPELLER TYPE METER
- MAGNETIC FLOW METER
- ROTAMETER

GENERAL INSTRUMENT SYMBOLS

- FIELD MOUNTED
- PANEL MOUNTED
- REAR-OF-PANEL MOUNTED
- N INTERLOCK (WHERE N = INTERLOCK NUMBER)
- P PURGE
- TWO INSTRUMENTS PHYSICALLY CONNECTED
- INTERNAL PLC INSTRUMENT OR FUNCTION
- INDICATOR LIGHT
- PISTON ACTUATOR
- TI TIMER

LINE SYMBOLS

- PROCESS PIPES OR CHANNELS
- ELECTRICAL SIGNAL
- ELECTRICAL INTERCONNECTION
- PNEUMATIC SIGNAL

SERVICE ABBREVIATIONS

AIR	AIR, ATMOSPHERIC PRESSURE
ASP	AIR SPARGE
BW	BACKWASH
CA	COMPRESSED AIR
CGW	CONTAMINATED GROUNDWATER
CDS	CONDENSATE
D	DRAIN
EFF	EFFLUENT
EXH	EXHAUST
GW	GROUNDWATER
NPW	NON-POTABLE WATER
P	PRODUCT (LNAPL)
PW	POTABLE WATER
S	SANITARY
SC	SECONDARY CONTAINMENT
SL	SLUDGE
SMC	STEAM MIGRATION CONTROL
SP	SAMPLE PORT
SS	STORM SEWER
STM	STEAM
SVE	SOIL VAPOR EXTRACTION
TF	TOTAL FLUIDS
V	VENT
VAP	VAPOR

PIPING MATERIAL IDENTIFICATION

CPVC	CHLORINATED POLYVINYL CHLORIDE
CSP	CARBON STEEL PIPE
COP	COPPER
CMP	CORRUGATED METAL PIPE
CIP	CAST IRON PIPE
DIP	DUCTILE IRON PIPE
GAL	GALVANIZED STEEL PIPE
PE	POLYETHYLENE PIPE
PP	POLYPROPYLENE PIPE
PVC	POLYVINYL CHLORIDE PIPE
PVCH	POLYVINYL CHLORIDE HOSE
RCP	REINFORCED CONCRETE PIPE
RUB	RUBBER HOSE
SS	STAINLESS STEEL PIPE
VCP	VITRIFIED CLAY PIPE

INSULATION/FINISH CLASS

EQUIPMENT SYMBOLS

- SUBMERSIBLE PUMP
- PUMP
- PNEUMATIC DOUBLE DIAPHRAGM PUMP
- FCV (FLOW CONTROL VALVE)
- BLOWER
- COMPRESSOR AIR COMPRESSOR
- CHEMICAL FEED PUMP
- WELL PUMP

PROCESS PIPING IDENTIFICATION

PIPE DIAMETER (INCHES) — SERVICE — PIPING MATERIAL IDENTIFICATION — INSULATION/FINISH CLASS

2"-WWW-XXX-Y

PROCESS PIPE

INSTRUMENT IDENTIFICATION

FIT 1-100

FIT-1-100

- LOOP NUMBER
- AREA NUMBER
- SEE BELOW

F	FILTER
FAL	FLOW ALARM LOW
FE	FLOW ELEMENT
FI	FLOW INDICATOR
FIT	FLOW INDICATOR AND TRANSMITTER
FIQ	FLOW INDICATOR AND TOTALIZER
FN	FAN
FQ	FLOW TOTALIZER
FR	FILTER REGULATOR
FSL	FLOW SWITCH LOW
HOA	HAND-OFF-AUTOMATIC
HS	HAND SWITCH
KY	TIMER
LAH	LEVEL ALARM HIGH
LAHH	LEVEL ALARM HIGH-HIGH
LAL	LEVEL ALARM LOW
LALL	LEVEL ALARM LOW-LOW
LEL	LOWER EXPLOSIVE LIMIT
LI	LEVEL INDICATOR
LSH	LEVEL SWITCH HIGH
LSHH	LEVEL SWITCH HIGH-HIGH
LT	RUN LIGHT
MV	MOTORIZED VALVE
OCA	OPEN(MOMENTARY)-CLOSE-AUTO
PAH	PRESSURE ALARM HIGH
PCV	PRESSURE CONTROL VALVE
PI	PRESSURE INDICATOR
PIT	PRESSURE INDICATOR AND TRANSMITTER
PSH	PRESSURE SWITCH HIGH
RV	RELIEF VALVE
SV	SOLENOID VALVE
TA	TEMPERATURE ANALYZER
TE	TEMPERATURE ELEMENT
TI	TEMPERATURE INDICATOR
TSH	TEMPERATURE SWITCH HIGH
TT	TEMPERATURE TRANSMITTER

CB&I Federal Services
17 Princess Road
Lawrenceville, New Jersey 08648

U.S. ARMY CORPS OF ENGINEERS
OMAHA DISTRICT
OMAHA, NEBRASKA

APPENDIX A
RECIRCULATION AND AMENDMENT SYSTEM PIPING AND INSTRUMENTATION DIAGRAM LEGEND
IN-SITU EDB BIOREMEDIATION PILOT TEST
KIRTLAND AFB, NEW MEXICO

File: I:\500433 – RAPID\03050100\500433-D1.dwg Xref:
Plot Date/Time: Apr 17, 2017 – 2:13pm Image:
Plotted By: zeke.carpio

Conex Interior View

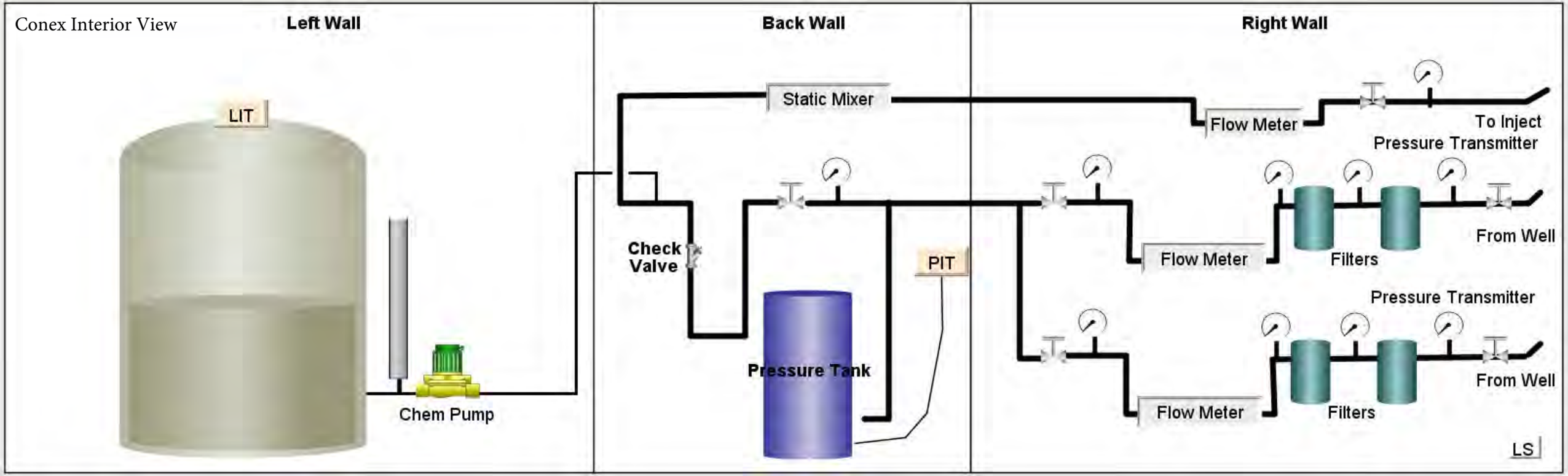

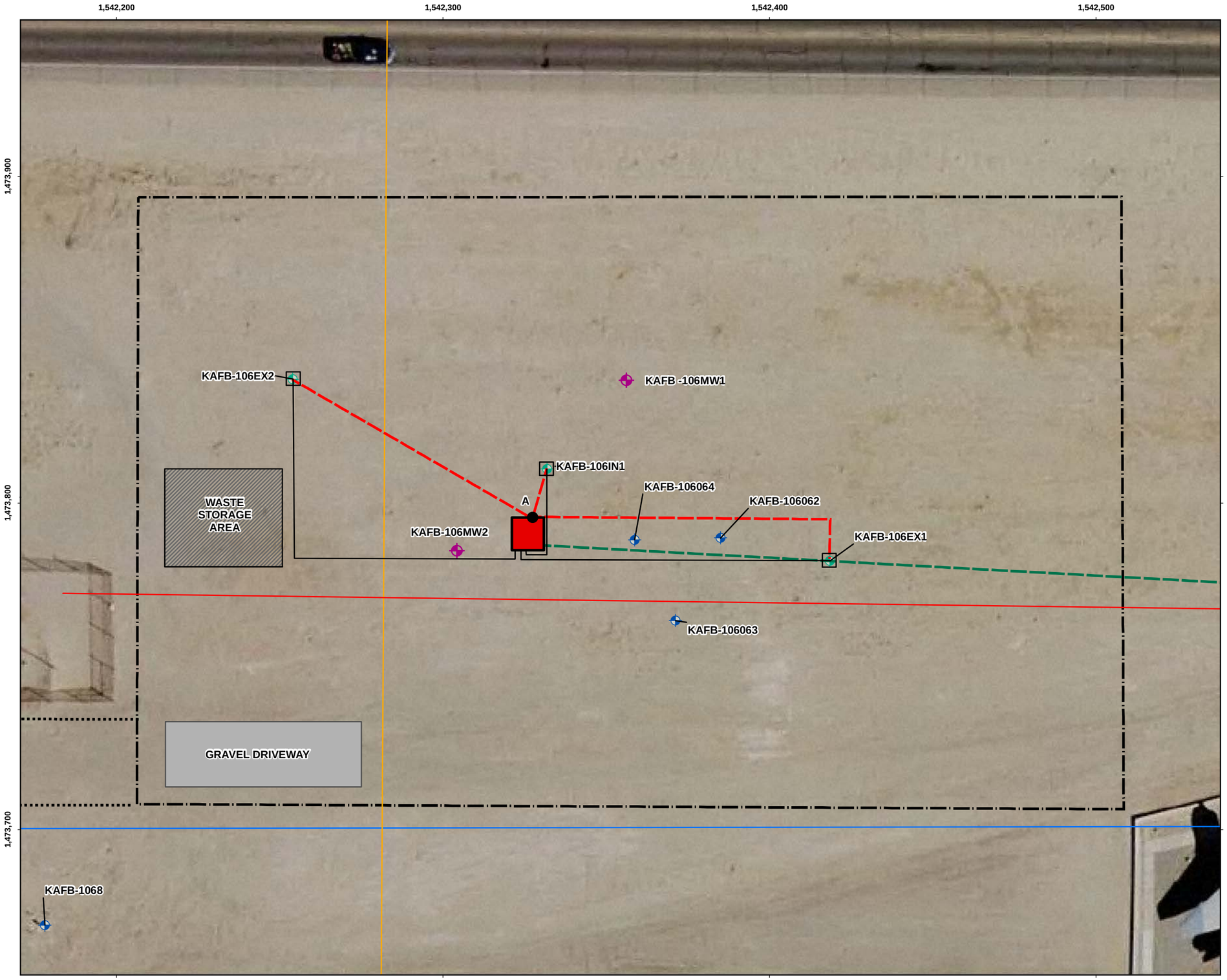

Legend

- Existing Monitoring Well
- Pilot Test Monitoring Well
- Pilot Test Injection/Extraction Well
- Natural Gas Utility Line
- Wastewater Utility Line
- Water Utility Line
- Electrical Cable Utility Line
- Construction Fence Area
- Truck Exit Route
- Proposed Electrical to Well Heads
- Proposed Electrical Service Line
- Proposed Conveyance Piping
- Pilot Test System Location

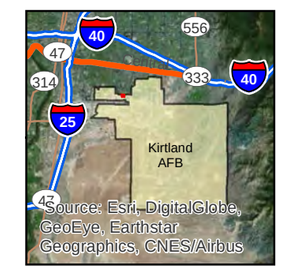

SITE LOCATION

Revision Date: 03/22/17

N

0 7.5 15 30

Feet

1 inch = 30 feet

Projection : NAD83 State Plane New Mexico Central FIPS3002 Feet

EDB IN SITU BIODEGRADATION
PILOT TEST WELL AND PIPE LOCATIONS

H:\Kirtland_AFB\GIS_Documents\Project_Maps\ESTCP\ECarpioESRI Data Solutions TeamKAFB_ESTCP011.mxd 03/22/17

EXTRACTION WELL HEAD AND VAULT PIPING FOR KAFB-106EX1 AND KAFB-106EX2

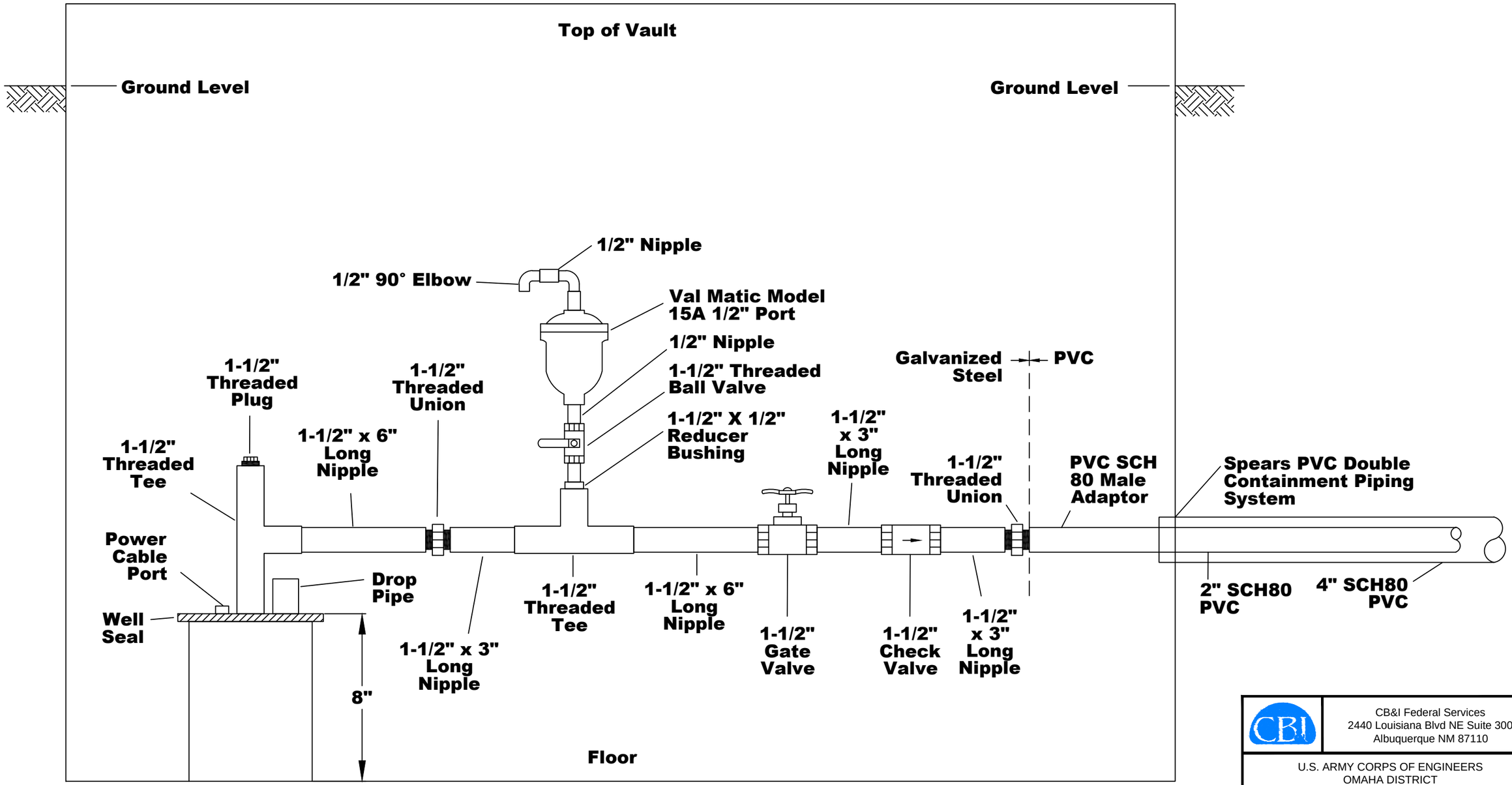

CB&I Federal Services
2440 Louisiana Blvd NE Suite 300
Albuquerque NM 87110

U.S. ARMY CORPS OF ENGINEERS
OMAHA DISTRICT
OMAHA, NEBRASKA

EXTRACTION WELL VAULT DESIGN
AND WELL HEAD

IN-SITU EDB BIOREMEDIATION PILOT TEST
KIRTLAND AFB, NEW MEXICO

500433-EXTRACTION WELL PIPING
File: C:\Users\zeke.carpio\appdata\local\temp\AcPublish_7860\500433-VAULT_DESIGN.dwg
Plot Date/Time: Apr 04, 2017 – 1:31pm
Plotted By: zeke.carpio
Xref :
Image :

INJECTION WELL HEAD AND VAULT PIPING FOR KAFB-106EX1 AND KAFB-106EX2

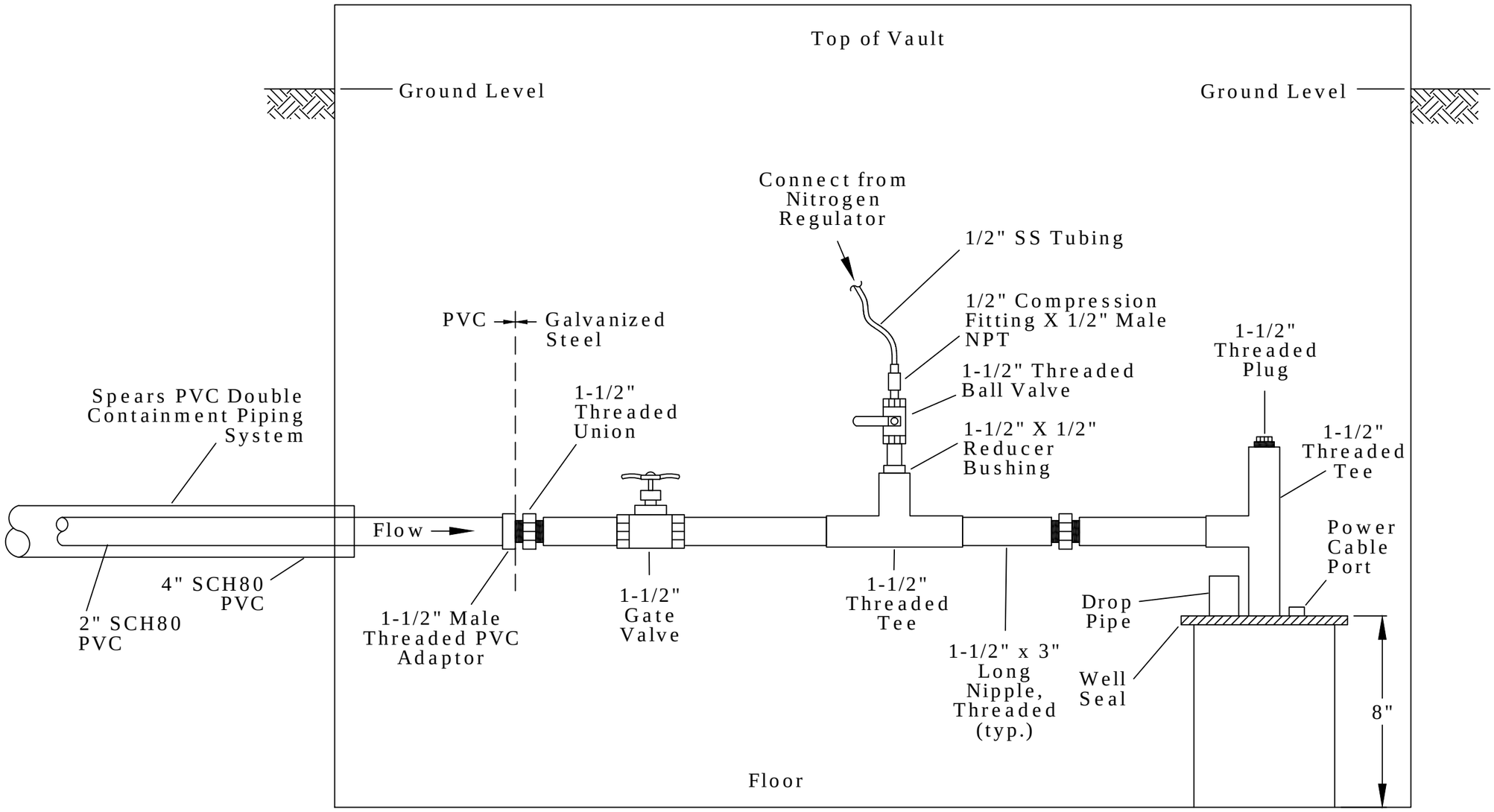

CB&I Federal Services
2440 Louisiana Blvd NE Suite 300
Albuquerque NM 87110

U.S. ARMY CORPS OF ENGINEERS
OMAHA DISTRICT
OMAHA, NEBRASKA

INJECTION WELL VAULT DESIGN
AND WELL HEAD

IN-SITU EDB BIOREMEDIATION PILOT TEST
KIRTLAND AFB, NEW MEXICO

500433-EXTRACTION WELL PIPING

File: C:\Users\zeke.carpio\appdata\local\temp\AcPublish_7860\500433-VAULT_DESIGN.dwg
Plot Date/Time: Apr 04, 2017 - 2:15pm
Plotted By: zeke.carpio
Xref :
Image :

CONCEPT™, TYPE 4 AND 12

INDUSTRY STANDARDS

Wall-mounting brackets required to maintain UL/CSA external mounting requirement.

CONCEPT solid single-door, door with window and flush-mount models

UL 508A Listed; Type 4, 12; File No. E61997
cUL Listed per CSA C22.2 No. 94; Type 4, 12; File No. E61997

NEMA/EEMAC Type 4, 12, 13
CSA, File No. 42186: Type 4, 12
VDE IP66
IEC 60529, IP66

CONCEPT two-door models

UL 508A Listed; Type 12; File No. E61997
cUL Listed per CSA C22.2 No. 94; Type 12; File No. E61997

NEMA/EEMAC Type 12
CSA, File No. 42186, Type 12
VDE IP 55
IEC 60529, IP55

APPLICATION

CONCEPT™ Enclosures are ideal for machine control applications. With streamlined styling, flush quarter-turn latches and an attractive, durable finish. Available in solid or window single-door and two-door landscape, flush-mount and sloped-top versions for application and mounting flexibility. Two-door landscape models provide full-width access and easy panel installation.

SPECIFICATIONS

- 14, 16 or 18 gauge steel (see table)
- Seams continuously welded and ground smooth
- Corner-formed doors
- Simple easy-to-remove and install hinge pins with built-in captivation clip
- High-torque threadless studs and fasteners on door
- Minimum-width body flange provides maximum door opening (210 degrees)
- External formed body flange
- Panel mounting studs fit optional CONCEPT panels and other accessories
- Mounting holes in back of body for optional external wall-mount brackets
- Hidden hinges
- Doors are interchangeable and easily removed by pulling clip-style hinge pins
- Seamless foam-in-place gasket
- Quarter-turn slotted latch(es)
- Door alignment device on doors wider than 30 in.
- Four hinges on 60-in.-high enclosures
- Grounding stud on body; bonding provision on door (except window-door models)
- Provisions for thermoplastic data pocket (right-hand hinged door on two-door models)
- Hardware kit with panel mounting nuts, panel grounding hardware and sealing washers
- Single-door enclosures have a three-point latch system on enclosures where A is equal to or greater than 42-in. with quarter-turn, slotted latch
- Window-door enclosures have a clear polycarbonate window flush with door surface
- Mounting frame on flush-mount enclosures extends completely around enclosure
- Two-door enclosures have a overlapping door design which provides full-width access
- Two door enclosures have a three-point latch system on right-hand hinged door furnished with flush slotted insert
- Illustrated instruction sheet

FINISH

Two standard finishes are available: ANSI 61 gray or RAL 7035 textured light-gray polyester powder paint inside and out.

ACCESSORIES

Door Stop Kit
Handles
Lock Inserts
CONCEPT™ Panels
Mounting-Bracket Kits

MODIFICATION AND CUSTOMIZATION

Hoffman excels at modifying and customizing products to your specifications. Contact your local Hoffman sales office or distributor for complete information.

BULLETIN: CW1

Catalog Number	AxBxC in./mm	Finish	Door Ga.	Body Ga.	CONCEPT Panel	Conductive CONCEPT Panel	Panel Size D x E in./mm	Mounting G x H in./mm	Latches qty.	Latches style	J in./mm
CSD30208	30.00 x 20.00 x 8.00 762 x 508 x 203	ANSI 61 Gray	14	16	CP3020	CP3020G	28.20 x 18.20 716 x 462	28.50 x 18.50 724 x 470	2	Quarter-turn	5.00 127
CSD30208LG	30.00 x 20.00 x 8.00 762 x 508 x 203	RAL 7035 Lt. Gray	14	16	CP3020	CP3020G	28.20 x 18.20 716 x 462	28.50 x 18.50 724 x 470	2	Quarter-turn	5.00 127
CSD30248	30.00 x 24.00 x 8.00 762 x 610 x 203	ANSI 61 Gray	14	14	CP3024	CP3024G	28.20 x 22.20 716 x 564	28.50 x 22.50 724 x 572	2	Quarter-turn	5.00 127
CSD30248LG	30.00 x 24.00 x 8.00 762 x 610 x 203	RAL 7035 Lt. Gray	14	14	CP3024	CP3024G	28.20 x 22.20 716 x 564	28.50 x 22.50 724 x 572	2	Quarter-turn	5.00 127
CSD30308	30.00 x 30.00 x 8.00 762 x 762 x 203	ANSI 61 Gray	14	14	CP3030	CP3030G	28.20 x 28.20 716 x 716	28.50 x 28.50 724 x 724	2	Quarter-turn	5.00 127
CSD30308LG	30.00 x 30.00 x 8.00 762 x 762 x 203	RAL 7035 Lt. Gray	14	14	CP3030	CP3030G	28.20 x 28.20 716 x 716	28.50 x 28.50 724 x 724	2	Quarter-turn	5.00 127
CSD36248	36.00 x 24.00 x 8.00 914 x 610 x 203	ANSI 61 Gray	14	16	CP3624	CP3624G	34.20 x 22.20 869 x 564	34.50 x 22.50 876 x 572	2	Quarter-turn	5.00 127
CSD36248LG	36.00 x 24.00 x 8.00 914 x 610 x 203	RAL 7035 Lt. Gray	14	16	CP3624	CP3624G	34.20 x 22.20 869 x 564	34.50 x 22.50 876 x 572	2	Quarter-turn	5.00 127
CSD36308	36.00 x 30.00 x 8.00 914 x 762 x 203	ANSI 61 Gray	14	14	CP3630	CP3630G	34.20 x 28.20 869 x 716	34.50 x 28.50 876 x 724	2	Quarter-turn	5.00 127
CSD36308LG	36.00 x 30.00 x 8.00 914 x 762 x 203	RAL 7035 Lt. Gray	14	14	CP3630	CP3630G	34.20 x 28.20 869 x 716	34.50 x 28.50 876 x 724	2	Quarter-turn	5.00 127
CSD36368	36.00 x 36.00 x 8.00 914 x 914 x 203	ANSI 61 Gray	14	14	CP3636	CP3636G	34.20 x 34.20 869 x 869	34.50 x 34.50 876 x 876	2	Quarter-turn	5.00 127
CSD36368LG	36.00 x 36.00 x 8.00 914 x 914 x 203	RAL 7035 Lt. Gray	14	14	CP3636	CP3636G	34.20 x 34.20 869 x 869	34.50 x 34.50 876 x 876	2	Quarter-turn	5.00 127
CSD161210	16.00 x 12.00 x 10.00 406 x 305 x 254	ANSI 61 Gray	16	18	CP1612	CP1612G	14.20 x 10.20 361 x 259	14.50 x 10.50 368 x 267	1	Quarter-turn	8.00 203
CSD161210LG	16.00 x 12.00 x 10.00 406 x 305 x 254	ANSI 61 Gray	16	18	CP1612	CP1612G	14.20 x 10.20 361 x 259	14.50 x 10.50 368 x 267	1	Quarter-turn	8.00 203
CSD161610	16.00 x 16.00 x 10.00 406 x 406 x 254	RAL 7035 Lt. Gray	16	18	CP1616	CP1616G	14.20 x 14.20 361 x 361	14.50 x 14.50 368 x 368	1	Quarter-turn	8.00 203
CSD161610LG	16.00 x 16.00 x 10.00 406 x 406 x 254	RAL 7035 Lt. Gray	16	18	CP1616	CP1616G	14.20 x 14.20 361 x 361	14.50 x 14.50 368 x 368	1	Quarter-turn	8.00 203
CSD162010	16.00 x 20.00 x 10.00 406 x 508 x 254	ANSI 61 Gray	16	18	CP2016	CP2016G	18.20 x 14.20 462 x 361	14.50 x 18.50 368 x 470	1	Quarter-turn	8.00 203
CSD162010LG	16.00 x 20.00 x 10.00 406 x 508 x 254	RAL 7035 Lt. Gray	16	18	CP2016	CP2016G	18.20 x 14.20 462 x 361	14.50 x 18.50 368 x 470	1	Quarter-turn	8.00 203
CSD201610	20.00 x 16.00 x 10.00 508 x 406 x 254	ANSI 61 Gray	16	18	CP2016	CP2016G	18.20 x 14.20 462 x 361	18.50 x 14.50 470 x 368	1	Quarter-turn	10.00 254
CSD201610LG	20.00 x 16.00 x 10.00 508 x 406 x 254	RAL 7035 Lt. Gray	16	18	CP2016	CP2016G	18.20 x 14.20 462 x 361	18.50 x 14.50 470 x 368	1	Quarter-turn	10.00 254
CSD202010	20.00 x 20.00 x 10.00 508 x 508 x 254	ANSI 61 Gray	16	18	CP2020	CP2020G	18.20 x 18.20 462 x 462	18.50 x 18.50 470 x 470	1	Quarter-turn	10.00 254
CSD202010LG	20.00 x 20.00 x 10.00 508 x 508 x 254	RAL 7035 Lt. Gray	16	18	CP2020	CP2020G	18.20 x 18.20 462 x 462	18.50 x 18.50 470 x 470	1	Quarter-turn	10.00 254
CSD202410	20.00 x 24.00 x 10.00 508 x 610 x 254	ANSI 61 Gray	16	18	CP2420	CP2420G	22.20 x 18.20 564 x 462	18.50 x 22.50 470 x 572	1	Quarter-turn	10.00 254
CSD202410LG	20.00 x 24.00 x 10.00 508 x 610 x 254	RAL 7035 Lt. Gray	16	18	CP2420	CP2420G	22.20 x 18.20 564 x 462	18.50 x 22.50 470 x 572	1	Quarter-turn	10.00 254
CSD241610	24.00 x 16.00 x 10.00 610 x 406 x 254	ANSI 61 Gray	16	18	CP2416	CP2416G	22.20 x 14.20 564 x 361	22.50 x 14.50 572 x 368	1	Quarter-turn	12.00 305
CSD241610LG	24.00 x 16.00 x 10.00 610 x 406 x 254	RAL 7035 Lt. Gray	16	18	CP2416	CP2416G	22.20 x 14.20 564 x 361	22.50 x 14.50 572 x 368	1	Quarter-turn	12.00 305
CSD242010	24.00 x 20.00 x 10.00 610 x 508 x 254	ANSI 61 Gray	16	18	CP2420	CP2420G	22.20 x 18.20 564 x 462	22.50 x 18.50 572 x 470	1	Quarter-turn	12.00 305
CSD242010LG	24.00 x 20.00 x 10.00 610 x 508 x 254	RAL 7035 Lt. Gray	16	18	CP2420	CP2420G	22.20 x 18.20 564 x 462	22.50 x 18.50 572 x 470	1	Quarter-turn	12.00 305
CSD242410	24.00 x 24.00 x 10.00 610 x 610 x 254	ANSI 61 Gray	14	16	CP2424	CP2424G	22.20 x 22.20 564 x 564	22.50 x 22.50 572 x 572	2	Quarter-turn	5.00 127
CSD242410LG	24.00 x 24.00 x 10.00 610 x 610 x 254	RAL 7035 Lt. Gray	14	16	CP2424	CP2424G	22.20 x 22.20 564 x 564	22.50 x 22.50 572 x 572	2	Quarter-turn	5.00 127
CSD243010	24.00 x 30.00 x 10.00 610 x 762 x 254	ANSI 61 Gray	14	16	CP3024	CP3024G	28.20 x 22.20 716 x 564	22.50 x 28.50 572 x 724	2	Quarter-turn	5.00 127
CSD243010LG	24.00 x 30.00 x 10.00 610 x 762 x 254	RAL 7035 Lt. Gray	14	16	CP3024	CP3024G	28.20 x 22.20 716 x 564	22.50 x 28.50 572 x 724	2	Quarter-turn	5.00 127
CSD302010	30.00 x 20.00 x 10.00 762 x 508 x 254	ANSI 61 Gray	14	16	CP3020	CP3020G	28.20 x 18.20 716 x 462	28.50 x 18.50 724 x 470	2	Quarter-turn	5.00 127
CSD302010LG	30.00 x 20.00 x 10.00 762 x 508 x 254	RAL 7035 Lt. Gray	14	16	CP3020	CP3020G	28.20 x 18.20 716 x 462	28.50 x 18.50 724 x 470	2	Quarter-turn	5.00 127
CSD302410	30.00 x 24.00 x 10.00 762 x 610 x 254	ANSI 61 Gray	14	16	CP3024	CP3024G	28.20 x 22.20 716 x 564	28.50 x 22.50 724 x 572	2	Quarter-turn	5.00 127
CSD302410LG	30.00 x 24.00 x 10.00 762 x 610 x 254	RAL 7035 Lt. Gray	14	16	CP3024	CP3024G	28.20 x 22.20 716 x 564	28.50 x 22.50 724 x 572	2	Quarter-turn	5.00 127
CSD303010	30.00 x 30.00 x 10.00 762 x 762 x 254	ANSI 61 Gray	14	14	CP3030	CP3030G	28.20 x 28.20 716 x 716	28.50 x 28.50 724 x 724	2	Quarter-turn	5.00 127
CSD303010LG	30.00 x 30.00 x 10.00 762 x 762 x 254	RAL 7035 Lt. Gray	14	14	CP3030	CP3030G	28.20 x 28.20 716 x 716	28.50 x 28.50 724 x 724	2	Quarter-turn	5.00 127
CSD362410	36.00 x 24.00 x 10.00 914 x 610 x 254	ANSI 61 Gray	14	16	CP3624	CP3624G	34.20 x 22.20 869 x 564	34.50 x 22.50 876 x 572	2	Quarter-turn	5.00 127

Catalog Number	AxBxC in./mm	Finish	Door Ga.	Body Ga.	CONCEPT Panel	Conductive CONCEPT Panel	Panel Size D x E in./mm	Mounting G x H in./mm	Latches qty.	Latches style	J in./mm
CSD363016	36.00 x 30.00 x 16.00 914 x 762 x 406	ANSI 61 Gray	14	14	CP3630	CP3630G	34.20 x 28.20 869 x 716	34.50 x 28.50 876 x 724	2	Quarter-turn	5.00 127
CSD363016LG	36.00 x 30.00 x 16.00 914 x 762 x 406	RAL 7035 Lt. Gray	14	14	CP3630	CP3630G	34.20 x 28.20 869 x 716	34.50 x 28.50 876 x 724	2	Quarter-turn	5.00 127
CSD483616	48.00 x 36.00 x 16.00 1219 x 914 x 406	ANSI 61 Gray	14	14	CP4836	CP4836G	46.20 x 34.20 1173 x 869	46.50 x 34.50 1181 x 876	1	3-point	24.00 610
CSD483616LG	48.00 x 36.00 x 16.00 1219 x 914 x 406	RAL 7035 Lt. Gray	14	14	CP4836	CP4836G	46.20 x 34.20 1173 x 869	46.50 x 34.50 1181 x 876	1	3-point	24.00 610
CSD242420	24.00 x 24.00 x 20.00 610 x 610 x 508	ANSI 61 Gray	14	14	CP2424	CP2424G	22.20 x 22.20 564 x 564	22.50 x 22.50 572 x 572	2	Quarter-turn	5.00 127
CSD242420LG	24.00 x 24.00 x 20.00 610 x 610 x 508	RAL 7035 Lt. Gray	14	14	CP2424	CP2424G	22.20 x 22.20 564 x 564	22.50 x 22.50 572 x 572	2	Quarter-turn	5.00 127
CSD302420	30.00 x 24.00 x 20.00 762 x 610 x 508	ANSI 61 Gray	14	14	CP3024	CP3024G	28.20 x 22.20 716 x 564	28.50 x 22.50 724 x 572	2	Quarter-turn	5.00 127
CSD302420LG	30.00 x 24.00 x 20.00 762 x 610 x 508	RAL 7035 Lt. Gray	14	14	CP3024	CP3024G	28.20 x 22.20 716 x 564	28.50 x 22.50 724 x 572	2	Quarter-turn	5.00 127
CSD363020	36.00 x 30.00 x 20.00 914 x 762 x 508	ANSI 61 Gray	14	14	CP3630	CP3630G	34.20 x 28.20 869 x 716	34.50 x 28.50 876 x 724	2	Quarter-turn	5.00 127
CSD363020LG	36.00 x 30.00 x 20.00 914 x 762 x 508	RAL 7035 Lt. Gray	14	14	CP3630	CP3630G	34.20 x 28.20 869 x 716	34.50 x 28.50 876 x 724	2	Quarter-turn	5.00 127

Purchase panels separately.

Optional NEMA-size panels require conversion kit Catalog Number CCPM4.

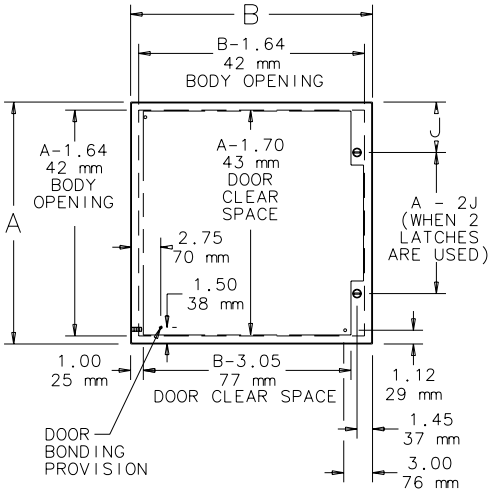

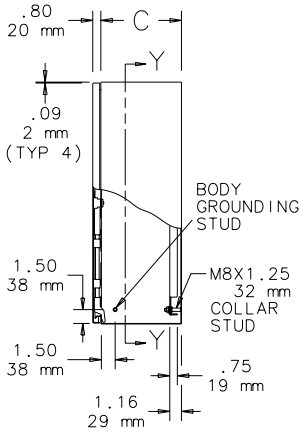

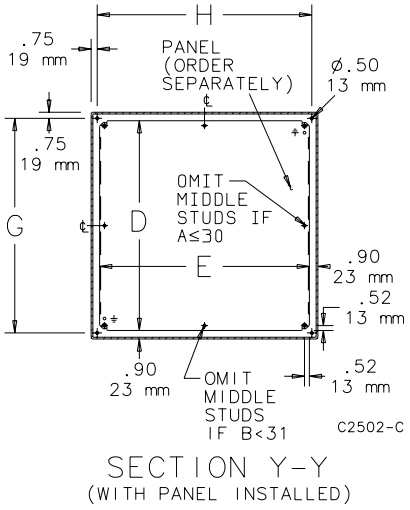

CONCEPT™ PANELS

These panels are taller and wider than corresponding NEMA-size panels. Panels are 14 or 12 gauge steel and painted white or have a conductive finish.
Panels have a formed flange along any side that is longer than 22.20 in. (564 mm). CP2420 and CP2424 have a flange on all four sides.

BULLETIN: CWP, CWY, DWDH2

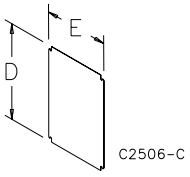

Catalog Number	Panel Type	Panel Size D x E (in.)	Panel Size D x E (mm)	Gauge
CP1212	Painted steel	10.20 x 10.20	259 x 259	14
CP1212G	Conductive	10.20 x 10.20	259 x 259	14
CP1612	Painted steel	14.20 x 10.20	361 x 259	14
CP1612G	Conductive	14.20 x 10.20	361 x 259	14
CP1616	Painted steel	14.20 x 14.20	361 x 361	12
CP1616G	Conductive	14.20 x 14.20	361 x 361	12
CP2016	Painted steel	18.20 x 14.20	462 x 361	12
CP2016G	Conductive	18.20 x 14.20	462 x 361	12
CP2014	Painted steel	18.20 x 12.20	462 x 310	14
CP2014G	Conductive	18.20 x 14.20	462 x 310	14
CP2416	Painted steel	22.20 x 14.20	564 x 361	12
CP2416G	Conductive	22.20 x 14.20	564 x 361	12
CP2020	Painted steel	18.20 x 18.20	462 x 462	12
CP2020G	Conductive	18.20 x 18.20	462 x 462	12
CP2420	Painted steel	22.20 x 18.20	564 x 462	12
CP2420G	Conductive	22.20 x 18.20	564 x 462	12
CP3020	Painted steel	28.20 x 18.20	716 x 462	12
CP3020G	Conductive	28.20 x 18.20	716 x 462	12
CP3220	Painted steel	30.20 x 18.20	762 x 462	12
CP4420	Painted steel	42.20 x 18.20	1072 x 462	12
CP5620	Painted steel	53.20 x 18.20	1351 x 462	12
CP2424	Painted steel	22.20 x 22.20	564 x 564	12
CP2424G	Conductive	22.20 x 22.20	564 x 564	12
CP3024	Painted steel	28.20 x 22.20	716 x 564	12
CP3024G	Conductive	28.20 x 22.20	716 x 564	12
CP3624	Painted steel	34.20 x 22.20	869 x 564	12
CP3624G	Conductive	34.20 x 22.20	869 x 564	12
CP4824	Painted steel	46.20 x 22.20	1173 x 564	12
CP4824G	Conductive	46.20 x 22.20	1173 x 564	12
CP3030	Painted steel	28.20 x 28.20	716 x 716	12
CP3030G	Conductive	28.20 x 28.20	716 x 716	12
CP3630	Painted steel	34.20 x 28.20	869 x 716	12
CP3630G	Conductive	34.20 x 28.20	869 x 716	12
CP4230	Painted steel	40.20 x 28.20	1021 x 716	12
CP4230G	Conductive	40.20 x 28.20	1021 x 716	12
CP3636	Painted steel	34.20 x 34.20	869 x 869	12
CP3636G	Conductive	34.20 x 34.20	869 x 869	12
CP4236	Painted steel	40.20 x 34.20	1021 x 869	12
CP4236G	Conductive	40.20 x 34.20	1021 x 869	12
CP4836	Painted steel	46.20 x 34.20	1173 x 869	12
CP4836G	Conductive	46.20 x 34.20	1173 x 869	12
CP6036	Painted steel	58.20 x 34.20	1478 x 869	12
CP6036G	Conductive	58.20 x 34.20	1478 x 869	12
CP2442	Painted steel	22.20 x 40.20	564 x 1021	12
CP2442G	Conductive	22.20 x 40.20	564 x 1021	12
CP3048	Painted steel	28.20 x 46.20	716 x 1173	12
CP3048G	Conductive	28.20 x 46.20	716 x 1173	12
CP3060	Painted steel	28.20 x 58.20	716 x 1478	12
CP3060G	Conductive	28.20 x 58.20	716 x 1478	12
CP7236	Painted steel	70.20 x 34.20	1783 x 869	12

Catalog number CP4230 is used on CONCEPT disconnect enclosures.

MODEL #: 800H-JR5A

30.5 mm Push Buttons

• Bulletin 800T/800H ..... **Page 10-2**

22.5 mm Push Buttons

• Bulletin 800F ..... **Page 10-66**
• Bulletin 800FC Configured Pendant Stations ..... **Page 10-127**
• Bulletin 800FD Monolithic ..... **Page 10-140**
• Bulletin 800M ..... **Web‡**

16 mm Push Buttons

• Bulletin 800B ..... **Page 10-146**

Specialty Push Buttons

Hazardous Location Push Buttons

• Bulletin 800H Type 7 & 9 ..... **Page 10-152**
• Bulletin 800R ..... **Page 10-189**
• Bulletin 800G ..... **Page 10-194**

Touch/Palm Push Buttons

• Bulletin 800P Palm Operated ..... **Page 10-210**
• Bulletin 800Z Zero-Force™ ..... **Page 10-214**

Miscellaneous Push Buttons

• Bulletin 800L Indicators ..... **Page 10-221**
• Bulletin 800H Security Stations ..... **Web‡**
• Bulletin 800S Stations ..... **Page 10-223**

‡ Information for this product line is available on the Industrial Controls Catalog website: www.ab.com/catalogs.

MODEL #: 800H-JR5A

30.5 mm Push Buttons

Product Overview

Bulletin 800T/800H 30.5 mm Push Buttons

- 30.5 mm mounting hole
- Type 4/13 watertight/oiltight (Bul. 800T)
- Type 4/4X/13 corrosion-resistant/watertight/oiltight (Bul. 800H)
- Heavy industrial stations and operators

Description

The Allen-Bradley Bulletin 800T and 800H 30.5 mm push button product lines are in a class by themselves. They are designed and constructed to perform in the most demanding industrial environments. In terms of sealing and switching performance, you will not find a more dependable push button offering. Allen-Bradley delivers more styles and options of operator types and contact blocks, offering flexibility to meet the most demanding specifications in the world's toughest industrial environments.

Design innovation is key to the performance advantage provided in the Bulletin 800T and 800H offerings. New in this catalog are the **Trigger Action E-Stop** operators, the new standard bearer in a tamper-resistant design. Also new is the **Universal LED Illumination** option that accepts a wide 12…130V AC/DC voltage input. This is compatible with all illuminated operator types, allows retrofitting in existing installations, and incorporates super bright LED technology.

Table of Contents

See below.

Standards Compliance

UL 508

CCC

Certifications

UL Listed
(File No. E14840, E10314
Guide No. NKCR, NOIV)

CSA Certified
(File No. LR1234, LR11924)

CSA C22.2, No. 14

EN/IEC: 60947-5-1

TABLE OF CONTENTS

Description	Page
Specifications	10-3
Assembled Stations	10-5
DeviceNet Stations	10-6
Trigger Action E-Stops	10-7
Push Buttons, Momentary	
Non-Illuminated	10-9
Illuminated	10-10
Non-Illuminated — with Two-Color Molded Legend Cap	10-11
Selector Switches, Non-Illuminated	
2-Position	10-12
3-Position	10-14
4-Position	10-16
Selector Switches, Illuminated	
2-Position	10-18
3-Position	10-19
Pilot Light Devices	10-20
Emergency Stop Operators	
Push-Pull, Non-Illuminated	
2-Position	10-21
3-Position	10-22
Push-Pull, Illuminated	
2-Position	10-23
3-Position	10-24
Specialty Operators	
Potentiometer	10-25
Mechanically Interlocked Push Button	10-25
Cluster Pilot Light	10-26
18 mm Small Pilot Light	10-27
1-, 2-, 3-, 4-Way Toggle Switch	10-28
Selector Push Button	10-29
Cylinder Lock Push Button	10-30
Padlocking Mushroom Head	10-30
Wobble Stick	10-30
Flip Lever Operator	10-31
Break-Glass Push Button Station	10-32
Custom-Built Stations	10-33
Enclosures	10-33
Accessories	
Contact Blocks	10-35
Power Modules and Universal LED Module	10-36
Replacement Color Caps	10-37
Selector Switch Knobs	10-38
Protective Boots	10-39
Push Buttons & Miscellaneous	10-40
Locking Attachments	10-42
Guards	10-44
Replacement Lamps	10-45
Replacement Keys	10-46
Legend Plates	10-47
Approximate Dimensions & Shipping Weights	10-53
Typical Pilot Light Wiring Diagram	10-65

MODEL #: 800H-JR5A

Specifications*

Electrical Ratings		
Contact ratings		Refer to the contact ratings tables on page 10-4.
Dielectric strength		2200V for one minute, 1300V for one minute (Logic Reed)
Electrical design life cycles		1 000 000 at max. rated load, 200 000 at max. rated load (Logic Reed)
Mechanical Ratings		
Vibration		10…2000 Hz, 1.52 mm displacement (peak-to-peak) max./ 10 G max. (except Logic Reed)
Shock		1/2 cycle sine wave for 11 ms ≥ 25 G (contact fragility) and no damage at 100 G
Degree of protection		Type 1/4/12/13 (800T); Type 1/4/4X/12/13 (800H); EN/IEC 60529 IP66/65
Mechanical design life cycles		
Push buttons	(Momentary, non-illuminated)	10 000 000 min.
	(Momentary, illuminated)	250 000 min.
	(Push-pull/twist-to-release)	250 000 min.
Selector switches	(Non-illuminated)	1 000 000 min.
	(Illuminated, key-operated)	200 000 min.
Potentiometers		25 000 min.
All other devices		200 000 min.
Contact operation		Shallow, mini, and low-voltage contact blocks: Slow, double make and break Logic Reed and sealed switch contact blocks: Single break magnetic
Wire gauge/Terminal screw torque		#18…14 AWG (#18…10 Max Duty) / 6…8 lb•in
Typical operating forces Operators without contact blocks		Flush, extended button, standard mushroom, jumbo plastic mushroom: 2 lbs max. Jumbo and extended aluminum mushroom head: 3.95 lbs max. Maintained selector switch: 3.6 in•lb max.
Spring return selector switches		3.6 in•lb to stop, 0.2 in•lb to return
Illuminated push buttons and push-to-test pilot lights		5 lb max.
2-position push-pull		8.0 lb max. push or pull
3-position push-pull		8 lb max. push to in position or pull to center position (15 lb max. pull to out position)
Twist-to-release or push-pull		9 lbs max. push or pull 30 in•oz max. twist, 6 in•oz minimum return
Potentiometer		Rotational torque 3…12 in•oz; stopping torque 12 in•lb (minimum)
Contact blocks	Standard	1 lb
	Logic Reed	1 lb max.
	Sealed switch	3 lb max. at 0.205 in. plunger travel
	Stackable sealed switch	1 lb max.
	MaxDuty	1.4 lb max.
	PenTUFF	1.4 lb max.
	Self Monitoring	1.6 lb
Environment		
Temperature range	Operating	-40…+131 °F (-40…+55 °C)
	Storage	-40…+185 °F (-40…+85 °C)
Note: Operating temperatures below freezing are based on the absence of moisture and liquids. Consult your local Rockwell Automation sales office or Allen-Bradley distributor for use in lower temperature applications.		
Humidity		50…95% RH from 77…140 °F (25…60 °C) per Procedure IV of MIL-STD-810C, Method 507.1 cycling test

* Performance Data — See Important- 3.

Standard Contact Ratings

Minimum: 24V, 24 mA

Maximum thermal continuous current I^{th} 10 A AC/2.5 A DC. Bulletin 800T units with 800T-XA contacts have ratings as follows:

Max. Opertnl. Volts U_e	Utilization Category		Rated Operational Currents		
	IEC	NEMA	Volts U_e	Make	Break
AC 600	AC-15	A600	120…600 72…120 24…72	7200VA 60 A 60 A	720VA 720VA 10 A
DC 600	DC-13	Q600	28…600 24…28∗	69VA 2.5 A	

∗ For applications below 24V/24 mA, Pen*TUFF* or Logic Reed contacts are recommended.

Sealed Switch Contact Ratings

Minimum: 5V, 1 mA

Maximum continuous current I_{th} 5 A. Bulletin 800T units have control circuit ratings with sealed switch contact blocks as follows:

Max. Opertnl. Volts U_e	Utilization Category		Rated Operational Currents		
	IEC	NEMA	Volts U_e	Make	Break
AC 600	AC-15	B600	120…600 0…120	3600VA 30 A	360VA 3 A
DC 300	DC-13	P300	24…300 0…24	138VA 5.0 A	

Stackable Sealed Switch Contact Ratings

Minimum: 5V, 10 mA (digital); 24V, 1 mA (analog)

Maximum continuous current I_{th} 2.5 A. Bulletin 800T units have control circuit ratings with sealed switch contact blocks as follows:

Max. Opertnl. Volts U_e	Utilization Category		Rated Operational Currents		
	IEC	NEMA	Volts U_e	Make	Break
AC 300	AC-15	C300	120…300 0…120	1800VA 15 A	180VA 1.5 A
DC 150	DC-13	Q150	24…150 0…24	69VA 2.5 A	

Logic Reed Contact Ratings

Minimum — DC: 5V, 1 mA
Maximum — DC: 30V, 0.06 A, AC: 150V, 0.15 A
Should only be used with resistive loads.

Materials Used in 800H Type 4X Operators

Thermoplastic Polyester (Fiberglass Reinforced)

- Bushings
- Mounting Rings
- Sockets

Thermoplastic Polyester

- Non-illuminated button caps

Transparent Amorphous Nylon

- Pilot light lens cap
- Illuminated button caps

Glass Filled Crystalline Nylon

- Thrust washer

Mineral Filled Nylon

- Trim washer

Nitrile (Synthetic Rubber)

- Gaskets and internal seals

Pen*TUFF*™ (Low Voltage) Contact Ratings

Minimum DC: 5V, 1 mA
Maximum thermal continuous current I_{th} 2.5 A AC/1.0 A DC. Bulletin 800T units with 800T-XAV contacts have ratings as follows:

Max. Opertnl. Volts U_e	Utilization Category		Rated Operational Currents		
	IEC	NEMA	Volts U_e	Make	Break
AC 300	AC-15	C300	120…300 0…120	1800VA 15 A	180VA 1.5 A
DC 150	DC-13	R150	24…150 0…24	28VA 1.0 A	

Snap Action Contact Ratings

Max. Opertnl. Volts U_e	Contact Rating Designation	Rated Operational Currents		
		Volts U_e	Make	Break
AC 300	A300	120…300 24…72	7200VA 60 A	720VA 10 A
DC 250	—	230…250 115…125	0.2 A 0.4 A	

MaxDuty Contact Rating

Maximum thermal continuous current I_{th} 24 A.
Pilot Duty — 120V AC, 12 A; 24V DC, 10 A
Motor Ratings — 120V AC, 1.5 Hp; 240V AC, 3 Hp; 24V DC, 10 A FLA/60 A LRA

Time Delay Contacts

Max. Opertnl. Volts U_e	Contact Rating Designation	Rated Operational Currents		
		Volts U_e	Make	Break
AC 120	B150	120	3600VA	360VA

Note: This device is not rated for DC applications.

Adjustment range: 0.5…15 s ± 25% I_{th} = 5 A

MODEL #: 800H-JR5A

Bulletin 800T/H

30.5 mm Push Buttons

Selector Switches

3-Position Selector Switch Devices, Non-Illuminated

Standard Knob Operator
Cat. No. 800T-J2A

Knob Lever Operator
Cat. No. 800T-J17A

Standard Knob Operator
Cat. No. 800H-JR2A

Contact Type	Operator Position			M = Maintained S = Spring Return	Type 4/13 Standard Knob Cat. No.	Type 4/13 Knob Lever Cat. No.	Type 4/4X/13 Standard Knob Cat. No.
No Contacts	—	—	—	M M M	**800T-J2**	**800T-J17**	**800H-JR2**
				S→M M	**800T-J4**	800T-J18	**800H-JR4**
				M M←S	**800T-J5**	800T-J19	**800H-JR5**
				S→M←S	**800T-J91**	**800T-J20**	**800H-JR91**
1 N.O. - 1 N.C.	O X	O O	X O	M M M	**800T-J2A**	**800T-J17A**	**800H-JR2A**
				S→M M	**800T-J4A**	**800T-J18A**	**800H-JR4A**
				M M←S	**800T-J5A**	**800T-J19A**	**800H-JR5A**
				S→M←S	**800T-J91A**	**800T-J20A**	**800H-JR91A**

Note: X = Closed/O = Open

800 [H] [ ] – [JR] [5] [ ] [A]
a *b* *c* *d* *e* *f*

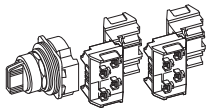

a

Protection Rating	
Code	Description
T	Metal, Type 4/13
H	Plastic, Type 4/4X/13

b

Finger-Safe Guards	
Code	Description
Blank	No guards
C	Guards on terminals

c

Knob Insert Colors		
800T Type 4/13 Code	Description	800H Type 4/4X/13 Code
J	White	JR
JX	Packet of colored inserts✶	JRX
Metal Wing Lever Colors❄		
Code	Color	Code
JA	Red	—
JG	Grey	—

d

Knob/Lever Type Operators	
Standard Knob	
Code	Operator Function
2	Maintained
4	Spring return from left
5	Spring return from right
91	Spring return from both
Knob Lever❄	
Code	Operator Function
17	Maintained
18	Spring return from left
19	Spring return from right
20	Spring return from both
Metal Wing Lever❄	
Code	Operator Function
11	Maintained
15	Spring return from left
16	Spring return from right
141	Spring return from both
Coin Slot❄	
Code	Operator Function
10	Spring return from both

e

Cam Option‡♣	
Code	Description
Blank	KB7 cam (std.)
KA1	KA1 cam
KA7	KA7 cam

e (cont'd)

Cam Option‡♣	
Code	Description
KC1	KC1 cam
KC7	KC7 cam
KD7	KD7 cam
KE7§	KE7 cam
KQ1	KQ1 cam
KQ7	KQ7 cam
KR1§	KR1 cam
KR7§	KR7 cam
KT1§	KT1 cam
KT7§	KT7 cam
KU7§	KU7 cam

f

Contact Blocks	
Code	Description
Blank	No contacts on operator
Standard	
A	1 N.O. - 1 N.C. 1-**800T-XA** on white side
B	2 N.O. - 2 N.C. 2-**800T-XA**s — 1 on white side/1 on black side
PenTUFF (Low Voltage)	
AV	1 N.O. - 1 N.C. 1-**800T-XAV** on white side
BV	2 N.O. - 2 N.C. 2-**800T-XAV**s — 1 on white side/1 on black side

f (cont'd)

Contact Blocks♣	
Code	Description
Blank	No contacts
Class 1, Div. 2/Zone 2	
Logic Reed	
AR	1 N.O. - 1 N.C. 1-**800T-XAR** on white side
BR	2 N.O. - 2 N.C. 2-**800T-XAR**s — 1 on white side/1 on black side
Sealed Switch	
AP	1 N.O. - 1 N.C. 1-**800T-XAP** on white side
BP	2 N.O. - 2 N.C. 2-**800T-XAP**s — 1 on white side/1 on black side
Stackable Sealed Switch	
AY	1 N.O. - 1 N.C. 1-**800T-XAY** on white side
BY	2 N.O. - 2 N.C. 2-**800T-XAY**s — 1 on white side/1 on black side

✶ One insert of each color (blue, green, orange, red, and yellow).
❄ Only available on Bul. 800T, Type 4/13 operators.
‡ If an overlapping cam is required, consult your local distributor.
§ Not available with wing levers.
♣ See Table 1 for cam selections and associated targets.

Table 1. Cam and Contact Block Functionality Table

Contact Block Suffix Code	Contact Block Side	Circuits	Cam Codes: KB7 (Std.)	KA1	KA7	KC1	KC7	KD7	KE7	KQ1	KQ7	KR1	KR7	KT1	KT7	KU7
A_	White	A	X O O	X O O	O O X	O O X	X O O	O O X	X O O	X O X	X O X	X O X	X O X	O O X	X O O	X O O
		B	O O X	O X O	O X O	O X O	O O X	O O X	O X X	O X O	O X O	O X O	O X O	O O O	O O X	O X O
B_	Black	A	X O O	X O O	O O X	O O X	X O O	X O O	O O X	O O X	X O O	O O X	X O O	O O X	X O O	O O X
		B	O O X	O X O	O X O	X O O	O O X	O X O	X X O	O X O	O X X	X O O	X X O	O X X	X X O	X X O
H_	White	A	X O O	X O O	O O X	O O X	X O O	O O X	X O O	X O X	X O X	X O X	X O X	O O X	X O O	X O O
		B	O O X	O X O	O X O	O X O	O O X	O O X	X X O	O X O	O X O	O X O	O X O	O O O	O O X	O X O
C_	Black	A	X O O	X O O	O O X	O O X	X O O	X O O	O O X	O O X	X O O	O O X	X O O	O O X	X O O	O O X
		B	O O X	O X O	O X O	X O O	O O X	O X O	X X O	O X O	O X X	O O X	O X X	X X O	O X X	X X O

Note: X = Closed/O = Open

HPS Fortress™ Commercial Encapsulated Transformers

MODEL #: C1F007LES

Features

Totally enclosed to seal out moisture and airborne contaminants

Easily accessible nameplate

Installation is made quick and easy with keyhole mounting slots

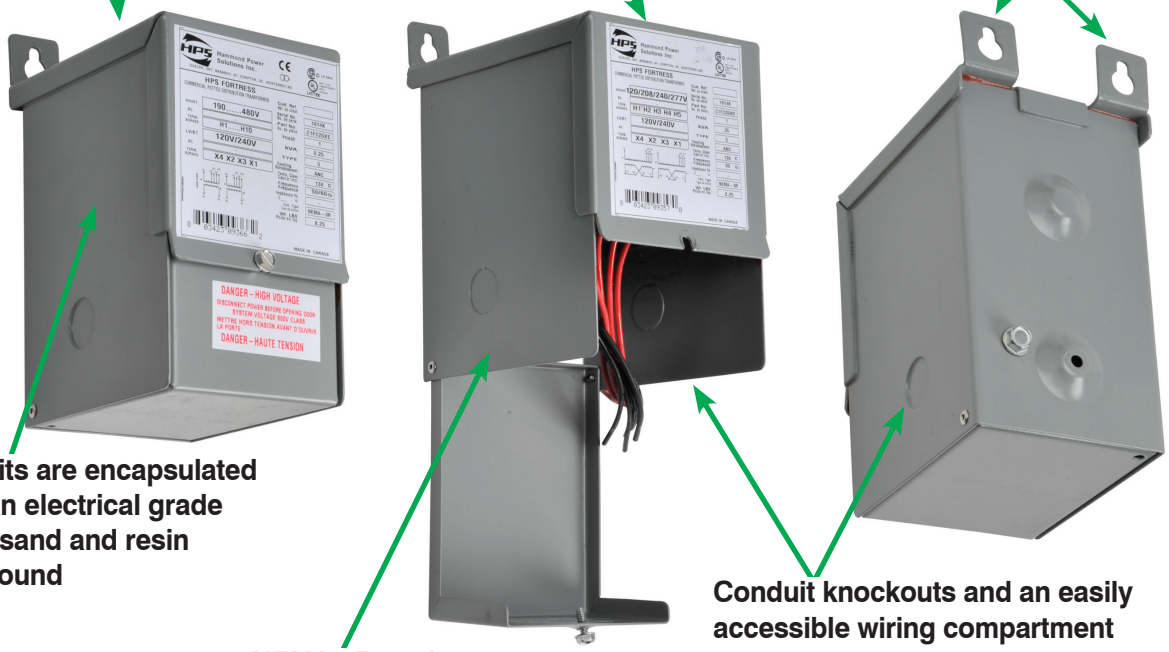

All units are encapsulated with an electrical grade silica sand and resin compound

NEMA 3R enclosure meets or exceeds listing criteria including NEMA and ANSI standards for indoor and outdoor applications

Conduit knockouts and an easily accessible wiring compartment

Voltage Regulation

Voltage regulation in transformers is the difference between the "No-Load voltage" and the "Full-Load voltage". This is expressed in terms of percentage.

$$\text{Regulation Percentage} = \frac{E_{\text{No-Load}} - E_{\text{Full Load}}}{E_{\text{Full Load}}} (100\%)$$

The secondary voltage (nominal) listed in these pages are at Full-Load, meaning the point at which the transformer is operating at maximum permissible secondary current. No-Load voltage can increase 6 to 10% max.

Warning: Secondary voltages of transformers may damage some loads. For example, a transformer connected as 480/120 Volt but applied 495 Volt primary can produce at No-Load a voltage of 134 Volts which will damage the inputs of a PLC D0-06AA, whose maximum input voltage is 132 Volt. Notice that the current of D0-06AA input is 10mA, making it very close to No-Load.

Company Information
Terminal Blocks
Power Distribution Blocks
Wiring Accessories
ZIPLink Connection System
Multi-wire Connectors
Sensor Cables and Connectors
M12 Junction Blocks
Panel Interface Connectors
Wiring Duct
Cable Ties
Wire
Bulk Multi-conductor Cables
Wire Management Products
Power Supplies
DC Converters
Transformers and Filters
Circuit Protection
Tools
Test Equipment
Enclosures
Enclosure Climate Control
Safety: Electrical Components
Safety: Protective Wear
Terms and Conditions

HPS Fortress™ Commercial Encapsulated Transformers Primary 480 x 240 VAC Secondary 240 x 120 VAC

MODEL #: C1F007LES

Features

- **Ratings:** Single phase from 0.50kVA to 25kVA; 60 Hz
- **Electrostatic Shield:** Standard on all single phase units 0.75kVA and larger
- **Quality Design:** All units are encapsulated with electrical grade silica sand and resin compounds which completely enclose the core and coil to seal out moisture, airborne contaminants and eliminates corrosion and deterioration.
- **Insulation:** Offering UL class 130°C (266°F) insulation, 95°C (203°F) temperature rise up to 1kVA on single phase; 180°C (356°F) insulation, 135°C (275°F) temperature rise on all units over 1kVA on single phase. Quiet operation with sound levels below NEMA standards.
- **Enclosures:** NEMA 3R enclosures meet or exceed listing criteria including NEMA, ANSI, and OSHA standards for indoor and outdoor service.
- To provide NEMA 3R protection (protection from falling rain), the transformer must be mounted vertically with the mounting tabs facing up.
- Rear and side entry conduit knockouts into an easily accessible and roomy wiring compartment.
- Color is ANSI 61 gray, UL50
- Taps are convenient to select output voltage.
- **Wiring compartment:** Provides tinned copper lead wire terminations up to 5kVA, terminal pad termination on 7.5KVA and larger and standard ground lug assembly for easy cable installation.
- Output voltage adjustable by taps.
- **Temperature Range:** -20°C (-4°F) to average ambient temperature 30°C (86°F), not to exceed 40°C (104°F)
- **Installation made quick and easy:** All encapsulated transformers are designed for wall mounting and include keyhole mounting slots.
- **10 year warranty** (limited to mfg. defects)

Agency Approvals

- UL Listed File No. E50394 (Type Q)
- CSA File No. LR3902 (Type Q)
- CE (up to 10 kVA)
- RoHS

C1FC50LE

C1F1C5LES

C1F005LES

HPS Fortress 480x240/240x120 Encapsulated Transformer Specifications

Part Number	Price	kVA Rating	Primary Voltage (60Hz)	Secondary Voltage (Nominal)	Output Current (Amps) 120/240	Impedance %		Total Heat Dissipation (Watts)*	Product Wt/Lbs
						VA	%z		
C1FC50LE	$102.00	0.50	240x480	120x240	4.17/2.08	500	7.6	35.8	15.0
C1FC75LES	$127.50	0.75			6.25/3.13	750	5.6	57.2	18.0
C1F1C0LES	$154.00	1.0			8.33/4.17	1000	4.8	75.3	22.0
C1F1C5LES	$184.00	1.5			12.5/6.25	1500	4.1	100.0	25.0
C1F002LES	$228.00	2.0			16.7/8.33	2000	4.3	121.6	40.0
C1F003LES	$282.00	3.0			25.0/12.5	3000	3.7	160.8	55.0
C1F005LES	$404.00	5.0			41.7/20.8	5000	4.2	314.0	88
C1F007LES	$611.75	7.5			62.5/31.3	7500	3.6	402.0	145
C1F010LES	$706.00	10			83.3/41.6	10000	3.7	525.0	165
C1F015LES**	$909.00	15			125/62.5	15000	2.4	585.0	286
C1F025LES**	$1,118.00	25			208.3/104.2	25000	2.0	838.0	346

** Heat dissipation calculated based on full rated load on transformer.*

*** Not CE*

HPS Fortress™ Commercial Encapsulated Transformers

Primary 480 x 240 VAC

Secondary 240 x 120 VAC

MODEL #: C1F007LES

Dimensions

Figure A - 500VA to 3kVA

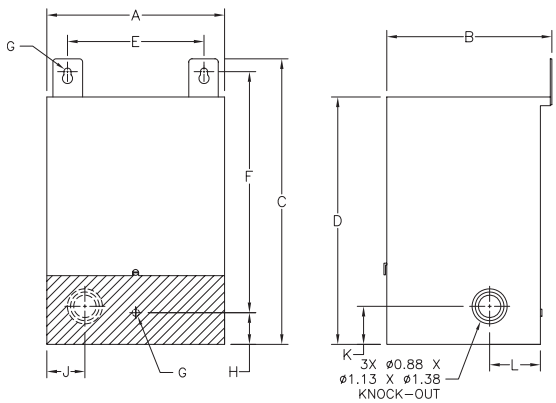

Figure B - 5kVA to 25kVA

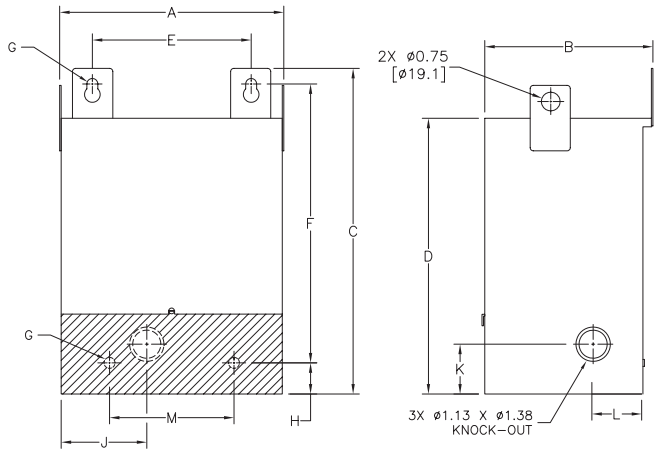

** Front bottom panel is hinged for access to terminals, shaded areas show view of rear mounting holes and knockout.*

Dimensions inches [mm]

HPS Fortress 480x240/240x120 Encapsulated Transformer Dimensions

Part Number	Mtg. Fig.	Overall Dimensions in (mm)				Mounting Holes in (mm)		Mtg. Hole Dia. in (mm)	Knock Out Dimensions in (mm)				Rear Mtg. Holes in (mm)
		A	B	C	D	E	F	G	H	J	K	L	M
C1FC50LE	A	5.00 (127.0)	4.75 (120.7)	9.25 (235.0)	8.25 (209.6)	3.88 (98.6)	7.75 (196.9)	0.22 (5.6)	1.25 (31.8)	1.00 (25.4)	1.50 (38.1)	2.00 (50.8)	N/A
C1FC75LES	A	5.00 (127.0)	4.75 (120.7)	9.25 (235.0)	8.25 (209.6)	3.88 (98.6)	7.75 (196.9)	0.22 (5.6)	1.25 (31.8)	1.00 (25.4)	1.50 (38.1)	2.00 (50.8)	
C1F1C0LES	A	5.88 (149.4)	5.50 (139.7)	10.50 (267.0)	8.50 (215.9)	4.13 (104.9)	8.25 (209.6)	0.28 (7.1)	1.25 (31.8)	1.25 (31.8)	1.50 (38.1)	2.00 (50.8)	
C1F1C5LES	A	5.88 (149.4)	5.50 (139.7)	10.50 (267.0)	8.50 (215.9)	4.13 (104.9)	8.25 (209.6)	0.28 (7.1)	1.25 (31.8)	1.25 (31.8)	1.50 (38.1)	2.00 (50.8)	
C1F002LES	A	7.00 (177.8)	6.50 (165.1)	11.25 (285.8)	9.75 (247.7)	5.38 (136.7)	9.50 (241.3)	0.28 (7.1)	1.25 (31.8)	1.50 (38.1)	1.50 (38.1)	2.00 (50.8)	
C1F003LES	A	7.00 (177.8)	6.50 (165.1)	11.25 (285.8)	9.75 (247.7)	5.38 (136.7)	9.50 (241.3)	0.28 (7.1)	1.25 (31.8)	1.50 (38.1)	1.50 (38.1)	2.00 (50.8)	
C1F005LES	B	10.00 (254.0)	7.75 (196.9)	17.25 (438.2)	15.25 (387.4)	7.38 (187.5)	15.38 (390.7)	0.44 (11.2)	1.25 (31.8)	4.00 (101.6)	2.00 (50.8)	2.00 (50.8)	6.00 (152.4)
C1F007LES	B	12.25 (311.2)	9.25 (234.9)	17.63 (447.8)	15.56 (395.2)	9.38 (238.3)	14.88 (377.9)	0.44 (11.2)	2.00 (50.8)	5.00 (127.0)	2.00 (50.8)	2.00 (50.8)	8.00 (203.2)
C1F010LES	B	12.25 (311.2)	9.25 (234.9)	20.88 (530.4)	18.88 (479.6)	9.38 (238.3)	18.13 (460.5)	0.44 (11.2)	2.00 (50.8)	5.00 (127.0)	2.00 (50.8)	2.00 (50.8)	8.00 (203.2)
C1F015LES	B	14.50 (368.3)	10.75 (273.1)	21.38 (543.1)	19.38 (492.3)	11.63 (295.4)	18.63 (473.2)	0.44 (11.2)	2.00 (50.8)	6.00 (152.4)	2.00 (50.8)	2.00 (50.8)	10.00 (254.0)
C1F025LES	B	14.50 (368.3)	10.75 (273.1)	27.38 (695.5)	24.88 (631.9)	11.13 (282.7)	24.50 (622.3)	0.56 (14.2)	2.00 (50.8)	6.00 (152.4)	2.00 (50.8)	2.00 (50.8)	10.00 (254.0)

Note: All dimensions have a tolerance of ±0.06 inches unless otherwise noted.
To provide NEMA 3R protection (protection from falling rain), the transformer must be mounted vertically with the mounting tabs facing up.
Additional information in installation insert.

Company Information
Terminal Blocks
Power Distribution Blocks
Wiring Accessories
ZIPLink Connection System
Multi-wire Connectors
Sensor Cables and Connectors
M12 Junction Blocks
Panel Interface Connectors
Wiring Duct
Cable Ties
Wire
Bulk Multi-conductor Cables
Wire Management Products
Power Supplies
DC Converters
Transformers and Filters
Circuit Protection
Tools
Test Equipment
Enclosures
Enclosure Climate Control
Safety: Electrical Components
Safety: Protective Wear
Terms and Conditions

HPS Fortress™ Commercial Encapsulated Transformers
Primary 480 x 240 VAC
Secondary 240 x 120 VAC

Wiring Diagram - For 500VA to 5kVA

SCHEMATIC

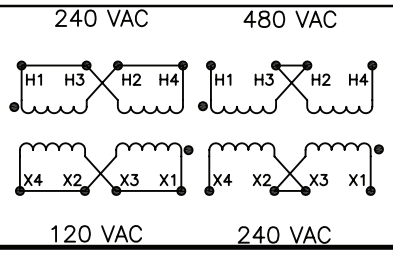

CONNECTIONS

Primary Volts	Connect lines to	Inter-connect
480	H1, H4	H2-H3
240	H1, H4	H1-H3, H2-H4

Secondary Volts	Connect lines to	Inter-connect
240	X1, X4	X2-X3
120/240	X1, X2, X4	X2-X3
120	X1, X2	X2-X4, X1-X3

Wiring Diagram - For 7.5kVA to 25kVA

SCHEMATIC

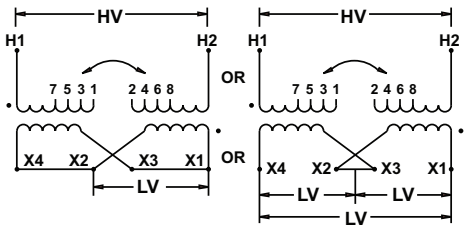

CONNECTIONS

Primary Volts	Connect lines to	Inter-connect
504	H1, H2	1-2
492	H1, H2	2-3
480	H1, H2	3-4
468	H1, H2	4-5
456	H1, H2	5-6
444	H1, H2	6-7
432	H1, H2	7-8
	H1, H2	H1-2, H2-1
240	H1, H2	H1-4, H2-3
228	H1, H2	H1-6, H2-5
216	H1, H2	H1-8, H2-7

Secondary Volts	Connect lines to	Inter-connect
240	X1, X4	X2- X3
120	X1, X2	X2-X4, X1-X3
120/240	X1, X2, X4	X2-X3

Termination*		
Part No.	***HV***	***LV***
C1FC50LE	#18 AWG Leads	#18 AWG Leads
C1FC75LES	#18 AWG Leads	#14 AWG Leads
C1F1C0LES	#18 AWG Leads	#14 AWG Leads
C1F1C5LES	#14 AWG Leads	#14 AWG Leads
C1F002LES	#14 AWG Leads	#14 AWG Leads
C1F003LES	#14 AWG Leads	#14 AWG Leads
C1F005LES	#14 AWG Leads	#12 AWG Leads
C1F007LES	#12 AWG Leads	Terminal Pad 1C
C1F010LES	#10 AWG Leads	Terminal Pad 1C
C1F015LES	#8 AWG Leads	Terminal Pad 1A
C1F025LES	#6 AWG Leads	Terminal Pad 1A

**** Transformers are provided with copper leads or copper terminal pads.***

Terminal Pad Diagram

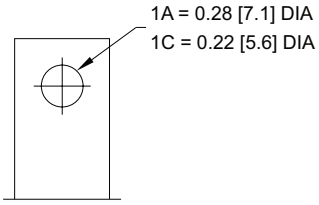

Dimensions inches [mm]

Control Transformer Selection

Control transformer selection

To select the proper transformer, you must first determine three characteristics of the load circuit. They are: total steady-state (sealed) VA, total inrush VA, and inrush load power factor.

Total steady-state "sealed" VA is the total amount of VA that the transformer must supply to the load circuit for an extended length of time. Calculate by adding the total steady-state VA of all devices in your control circuit. *(The operating VA data for the devices should be available from the manufacturers.)*

The inrush VA is the amount of VA that the transformer must supply for all components in the control circuit that are energized together. Consideration for the start-up sequence may be required. *(Inrush VA data should be obtained from the device manufacturers.)*

The inrush load power factor is difficult to determine without detailed vector analysis of all the control components. In the absence of such information, we recommend that a 40% power factor be utilized.

Six easy steps

Once the three load circuit variables have been determined, follow these steps to select the proper transformer.

1. Determine your primary (supply) and secondary (output) voltage requirements, as well as the required frequency (i.e. 60 Hz).
2. Calculate the total sealed VA of your circuit by adding the total sealed VA of all devices in the control circuit.
3. Calculate the inrush VA by adding the inrush VA of all components being energized together. Remember to add the sealed VA of all components that do not have inrush VA (lamps, timers, etc.), as they do present a load to the transformer during maximum inrush. If the inrush for your components is unknown, assume a 40% inrush power factor.
4. Calculate the total inrush VA using one of two methods:
   Method B will result in slightly larger transformer selected.

A $$\text{Total Inrush VA} = \sqrt{(\text{VA sealed})^2 + (\text{VA inrush})^2}$$

or

B $$\text{Total Inrush VA} = \text{VA Sealed} + \text{VA Inrush}$$

5. If the nominal supply voltage does not fluctuate more than 5%, then reference the 90% secondary voltage column in the Regulation Data Table for the correct VA rating.
   If the supply voltage varies up to 10%, the 95% secondary voltage column should be used to size the transformer. The 85% secondary voltage column gives minimum values for proper electromagnetic device operation and should only be used as a reference.
6. Using the regulation data table below, select the appropriate VA rated transformer:
   A. With a continuous VA rating that is equal to or greater than the value in Step 2.
   B. With a maximum inrush VA equal to or greater than the value obtained in Step 4.

Note: See over-current protection chart for transformers at the end of this section.

HPS Imperator Transformer Regulation Data Table

Continuous VA Transformer Nameplate	Inrush VA @ 40% Power Factor		
	85% Secondary Voltage	90% Secondary Voltage	95% Secondary Voltage
50	330	259	192
75	350	258	170
100	620	467	321
150	895	699	512
250	1596	1229	880
350	2464	1889	1345
500	3939	2854	1819
750	6422	4778	3228
1000	9842	7102	4530
1500	12797	9018	5489

Note: It is recommended that a control transformer be sized at a 40% power factor. Some components in a circuit, such as electromagnetic devices, typically operate at that level due to their inherently lower power factor. Selecting a transformer at 40% power factor will more than adequately size the unit for all the various loads in the circuit.

Voltage regulation in transformers is the difference between the "No-Load voltage" and the "Full-Load voltage". This is expressed in terms of percentage.

$$\text{Regulation Percentage} = \frac{E_{\text{No-Load}} - E_{\text{Full Load}}}{E_{\text{Full Load}}} (100\%)$$

The secondary voltage (nominal) listed in these pages are at Full-Load, meaning the point at which the transformer is operating at maximum permissible secondary current. No-Load voltage can increase 4 to 6%.

Warning: Secondary voltages of transformers may damage some loads. For example, a transformer connected as 480/120 Volt but applied 495 Volt primary can produce at No-Load a voltage of 134 Volts which will damage the inputs of a PLC D0-06AA, whose maximum input voltage is 132 Volt. Notice that the current of D0-06AA input is 10mA, making it very close to No-Load.

MODEL #: FAZ-D15-NA-SP

Prices as of April 27, 2016. Check Web site for most current prices.

EATON FAZ-NA Miniature Circuit Breakers

Overview

Eaton FAZ-NA miniature circuit breakers offer optimum and efficient protection for branch and control circuits up to 40 amps. The FAZ-NA series is available with C or D trip characteristics in accordance with UL 489. These circuit breakers are current limiting, which means they interrupt fault currents within one half cycle of the fault. The FAZ-NA series is DIN-rail mountable and can be used in feeder and branch circuit applications.

Listings

- UL Listed under UL 489
  Category DIVQ File E235139
  Busbar Accessory
  Category NMTR2.E257181
  Category DIHS E257181
- CSA 22.2, No. 5 File 204453
- CE LVD 2006/95/EC
- IEC/EN 60947-2

Features and Benefits

- Dual rated for AC or DC applications
- Complete range of UL 489 listed DIN rail mounted miniature circuit breakers up to 40 ampere current rating
- Single-pole, two-pole and three-pole models
- Current limiting design provides fast short circuit interruption that reduces the let-through energy, which can damage the circuit
- Suitable for branch circuit device protection
- Thermal-magnetic overcurrent protection
  — two levels of short circuit protection, categorized by C and D curves

  C curve magnetic trip point:
  5 to 10 times the rated current, typically used for small transformers, pilot devices, etc.

  D curve magnetic trip point:
  10 to 20 times the rated current, typically used for transformers or very high inductive loads.
- Trip-free design — breaker cannot be defeated by holding the handle in the "ON" position
- Captive screws cannot be lost
- SWD (switching duty) rated circuit breaker — suitable for switching fluorescent lighting loads (In ≤ 20A)
- Fulfills UL 489, CSA C22.2 No.5 and also IEC 60947-2 Standard
- Can also be used in applications for which UL 1077 or CSA C22.2 No.235 are also allowed
- Field installable shunt trip and auxiliary switch subsequent mounting
- Module width of only 17.7 mm (per pole)
- Contact position indicator (red / green)
- 35mm DIN-rail mountable, utilizing spring clip
- Suitable for reverse feed applications

Applications

Feeder and Branch Circuit Protection

- Convenience receptacle circuits (internal / external)
- Motor control circuits
- Load circuits leaving the equipment (external)
- HACR Equipment (Heating Air Conditioning, Refrigeration)
- PLC I/O points
- Computers
- Power supplies
- Control instrumentation
- Relays
- UPS
- Power conditioners

EATON FAZ-NA Miniature Circuit Breakers

Tripping Characteristics

Eaton FAZ-NA miniature circuit breakers are available with "C" and "D" tripping characteristics.

Type C trip curve: 5 to10 *In*

C-curve devices are suitable for applications where medium levels of inrush current are expected. Applications include small transformers, lighting, pilot devices, control circuits and coils. C-curve devices provide a medium magnetic trip point.

Type D trip curve: 10 to 20 *In*

D-curve devices are suitable for applications where high levels of inrush current are expected. The high magnetic trip point prevents nuisance tripping in high inductive applications such as motors, transformers and power supplies.

Eaton FAZ-NA devices are current limiting, which means they interrupt fault currents within one half cycle of the fault. Current limiting devices offer superior protection by reducing peak let-through current and energy.

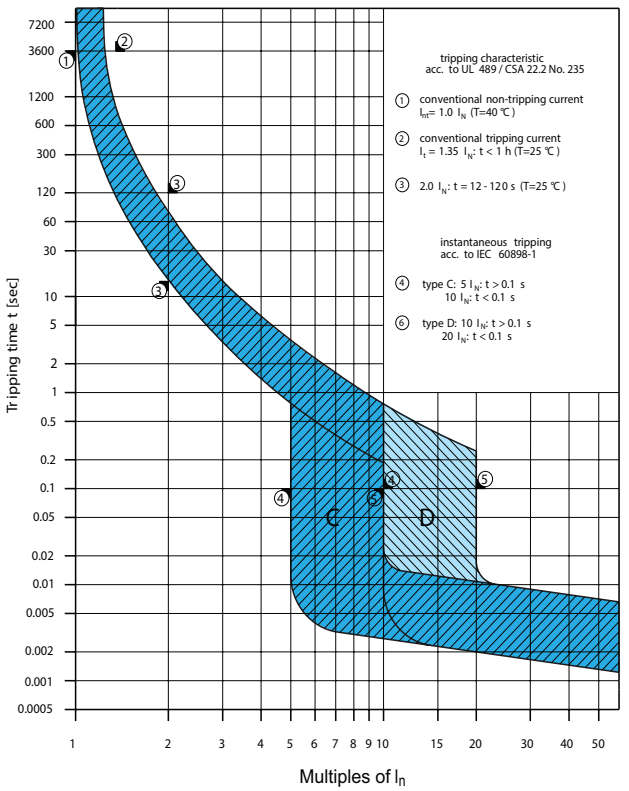

Labeling

The front of each Eaton FAZ-NA miniature circuit breaker is labeled for positive identification.

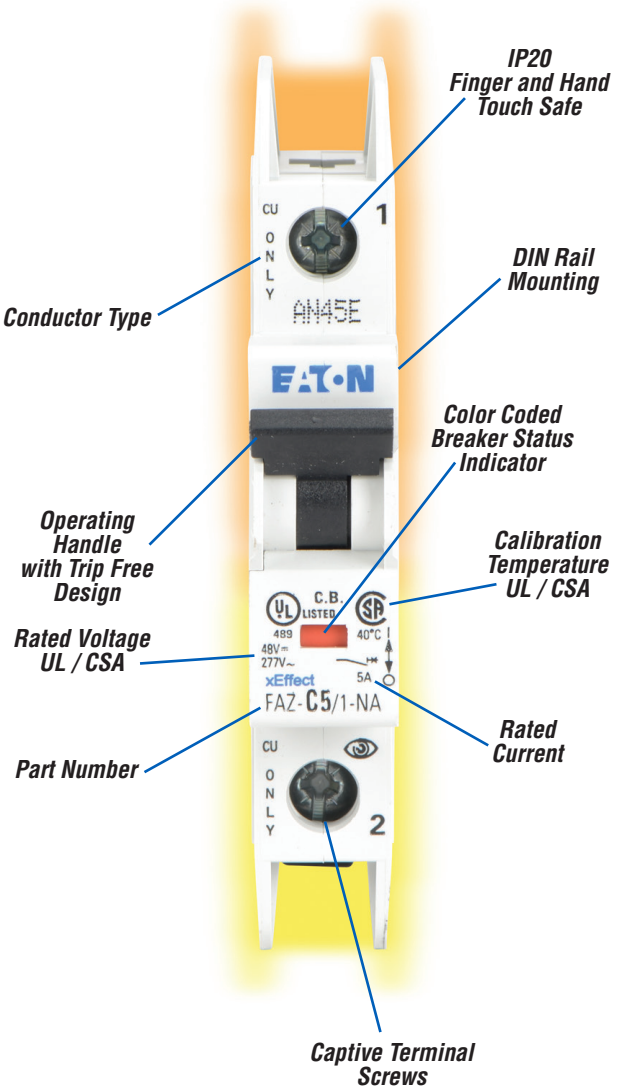

EATON FAZ-NA Series Selection Guide

Single-Pole

Note: Eaton product part numbers will contain a [.] instead of [P] and a [/] instead of a [-].
Example: FAZ-C0P5-1-NA-SP = FAZ-C0.5/1-NA-SP

FAZ-NA – Single-Pole Selection Guide				
Ampere Rating	C Curve Part Number	Price	D Curve Part Number	Price
0.5	FAZ-C0P5-1-NA-SP	$18.00	FAZ-D0P5-1-NA-SP	$18.00
1	FAZ-C1-1-NA-SP		FAZ-D1-1-NA-SP	
1.5	FAZ-C1P5-1-NA-SP		FAZ-D1P5-1-NA-SP	
2	FAZ-C2-1-NA-SP		FAZ-D2-1-NA-SP	
3	FAZ-C3-1-NA-SP		FAZ-D3-1-NA-SP	
4	FAZ-C4-1-NA-SP		FAZ-D4-1-NA-SP	
5	FAZ-C5-1-NA-SP		FAZ-D5-1-NA-SP	
6	FAZ-C6-1-NA-SP		FAZ-D6-1-NA-SP	
7	FAZ-C7-1-NA-SP		FAZ-D7-1-NA-SP	
8	FAZ-C8-1-NA-SP		FAZ-D8-1-NA-SP	
10	FAZ-C10-1-NA-SP		FAZ-D10-1-NA-SP	
13	FAZ-C13-1-NA-SP		FAZ-D13-1-NA-SP	
15	FAZ-C15-1-NA-SP		FAZ-D15-1-NA-SP	
16	FAZ-C16-1-NA-SP		FAZ-D16-1-NA-SP	
20	FAZ-C20-1-NA-SP		FAZ-D20-1-NA-SP	
25	FAZ-C25-1-NA-SP		FAZ-D25-1-NA-SP	
30	FAZ-C30-1-NA-SP		FAZ-D30-1-NA-SP	
32	FAZ-C32-1-NA-SP		FAZ-D32-1-NA-SP	
*35	FAZ-C35-1-NA-SP		FAZ-D35-1-NA-SP	
*40	FAZ-C40-1-NA-SP		FAZ-D40-1-NA-SP	
* Rated 240VAC				

Two-Pole

Note: Eaton parts available for sale to North America locations only.

FAZ-NA – Two-Pole Selection Guide				
Ampere Rating	C Curve Part Number	Price	D Curve Part Number	Price
0.5	FAZ-C0P5-2-NA	$35.00	FAZ-D0P5-2-NA	$35.00
1	FAZ-C1-2-NA		FAZ-D1-2-NA	
1.5	FAZ-C1P5-2-NA		FAZ-D1P5-2-NA	
2	FAZ-C2-2-NA		FAZ-D2-2-NA	
3	FAZ-C3-2-NA		FAZ-D3-2-NA	
4	FAZ-C4-2-NA		FAZ-D4-2-NA	
5	FAZ-C5-2-NA		FAZ-D5-2-NA	
6	FAZ-C6-2-NA		FAZ-D6-2-NA	
7	FAZ-C7-2-NA		FAZ-D7-2-NA	
8	FAZ-C8-2-NA		FAZ-D8-2-NA	
10	FAZ-C10-2-NA		FAZ-D10-2-NA	
13	FAZ-C13-2-NA		FAZ-D13-2-NA	
15	FAZ-C15-2-NA		FAZ-D15-2-NA	
16	FAZ-C16-2-NA		FAZ-D16-2-NA	
20	FAZ-C20-2-NA		FAZ-D20-2-NA	
25	FAZ-C25-2-NA		FAZ-D25-2-NA	
30	FAZ-C30-2-NA		FAZ-D30-2-NA	
32	FAZ-C32-2-NA		FAZ-D32-2-NA	
*35	FAZ-C35-2-NA		FAZ-D35-2-NA	
*40	FAZ-C40-2-NA		FAZ-D40-2-NA	
* Rated 240VAC				

EATON FAZ-NA Series Selection Guide

FAZ-NA – Three-Pole Selection Guide				
Ampere Rating	C Curve Part Number	Price	D Curve Part Number	Price
0.5	FAZ-C0P5-3-NA	$54.50	FAZ-D0P5-3-NA	$54.50
1	FAZ-C1-3-NA		FAZ-D1-3-NA	
1.5	FAZ-C1P5-3-NA		FAZ-D1P5-3-NA	
2	FAZ-C2-3-NA		FAZ-D2-3-NA	
3	FAZ-C3-3-NA		FAZ-D3-3-NA	
4	FAZ-C4-3-NA		FAZ-D4-3-NA	
5	FAZ-C5-3-NA		FAZ-D5-3-NA	
6	FAZ-C6-3-NA		FAZ-D6-3-NA	
7	FAZ-C7-3-NA		FAZ-D7-3-NA	
8	FAZ-C8-3-NA		FAZ-D8-3-NA	
10	FAZ-C10-3-NA		FAZ-D10-3-NA	
13	FAZ-C13-3-NA		FAZ-D13-3-NA	
15	FAZ-C15-3-NA		FAZ-D15-3-NA	
16	FAZ-C16-3-NA		FAZ-D16-3-NA	
20	FAZ-C20-3-NA		FAZ-D20-3-NA	
25	FAZ-C25-3-NA		FAZ-D25-3-NA	
30	FAZ-C30-3-NA		FAZ-D30-3-NA	
32	FAZ-C32-3-NA		FAZ-D32-3-NA	
*35	FAZ-C35-3-NA		FAZ-D35-3-NA	
*40	FAZ-C40-3-NA		FAZ-D40-3-NA	
* Rated 240VAC				

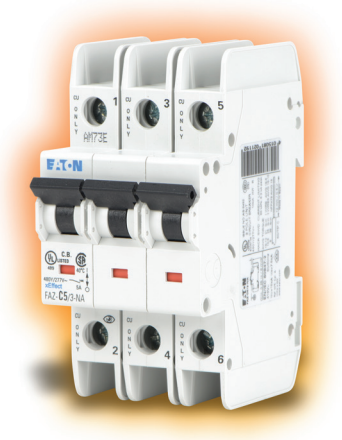

Three-Pole

Note: Eaton product part numbers will contain a [.] instead of [P] and a [/] instead of a [-].
Example: FAZ-C0P5-3-NA = FAZ-C0.5/3-NA

EATON FAZ-NA Series Technical Specifications

FAZ-NA Miniature Circuit Breakers – UL/CSA			
		C Curve	***D Curve***
Short Circuit Trip Response		5 - 10 *I*n	10 - 20 *I*n
Current Range		0.5 - 40 A	
Maximum Voltage Ratings UL / CSA	0.5 - 32 A	277 / 480Y	
	35 - 40 A	240VAC	
	Per pole	48VDC	
	2 poles in series	96VDC Max	
Thermal Tripping Characteristics	Single pole	40°C	
	Multi-pole		
Short Circuit Ratings (@ maximum voltage)	1 pole	10kA *Note: 14 kAIC at select amperages* *B and C curves (15-25 A)* *D curve (13-20 A)*	
	2 pole		
	3 pole		
Rated Frequency		50/60 Hz	
Agency Approvals		UL File #E235139, CSA #204453	
Note: To obtain the most current agency approval information, see the Agency Approval Checklist section on the specific part number's web page.			

FAZ-NA Miniature Circuit Breaker - IEC			
		C Curve	***D Curve***
Short Circuit Trip Response		5 - 10 *I*n	10 - 20 *I*n
Current Range		0.5 - 40 A	
Maximum Voltage Ratings - IEC/EN 60947-2	1 pole	240/415 VAC	
	2 pole / 3 pole		
	2 poles in series		
Thermal Tripping Characteristics	Single pole	30°C	
	Multi-pole		
Interrupt Ratings (At Max Voltage)		15kA	
Rated Frequency		50/60 Hz	

General Specifications		
Lifespan / Endurance		≥20,000 (1 operation = ON/OFF)
Operating Temperature		UL 489, CSA C22.2 No.5 = 40°C IEC 60947-2 = 30°C
Shock (UL 489)		10g 20-25 ms
Housing Material		Nylon
Mounting Position		Vertical
Weight	1 pole	0.3 lb (136g)
	2 pole	0.6 lb (272g)
	3 pole	0.9 lb (408g)

Wire Size		
Ampere Rating	***Conductor Size***	
0.5 - 40	One wire	18 to 6 AWG (0.75 to 13mm²)
	Two wires	18 to 10 AWG (0.75 to 5mm²)
Note: Eaton does not recommend the use of wire ferrules or crimping terminals. The wire gauges are specified above and in the installation instructions included with each circuit breaker.		

Tightening Torque	
Conductor Size	***Tightening Torque***
18 - 12 AWG	21 lb·in (2.4 N·m)
10 - 8 AWG	25 lb·in (2.8 N·m)
6AWG	36 lb·in (4.1 N·m)

EATON FAZ-NA Series Technical Data

Let-Through Energy

- The X axis shows the prospective short-circuit current levels.
- The Y axis indicates the actual let-through values at those prospective fault ratings for each FAZ-NA device plotted.

As can be interpreted from the bend in the plotted curves, each device acts to limit the damaging let-through energy at those values of short-circuit current.

Characteristic C (0.5-20A), 277V

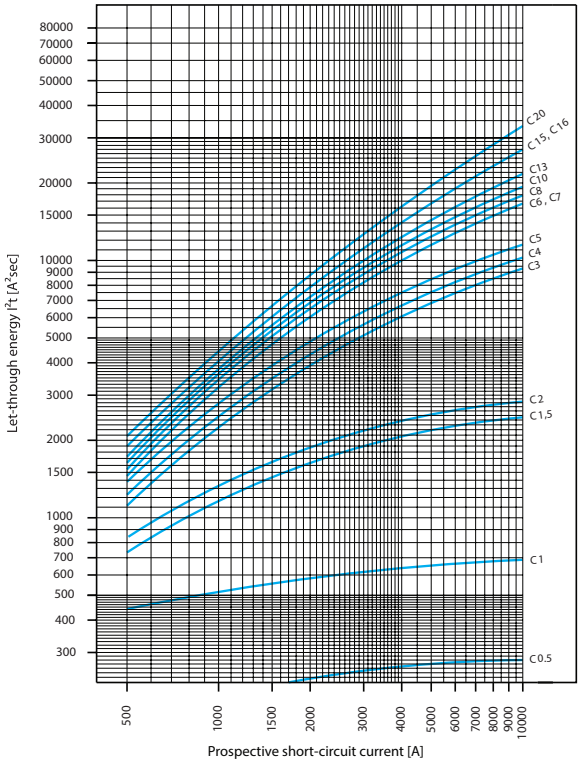

Characteristic C (25-40A), 240V

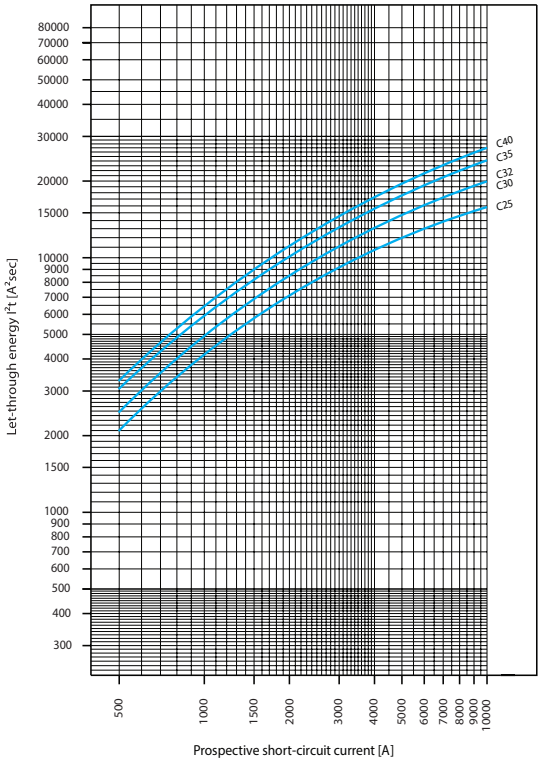

Characteristic D (0.5-20A), 277V

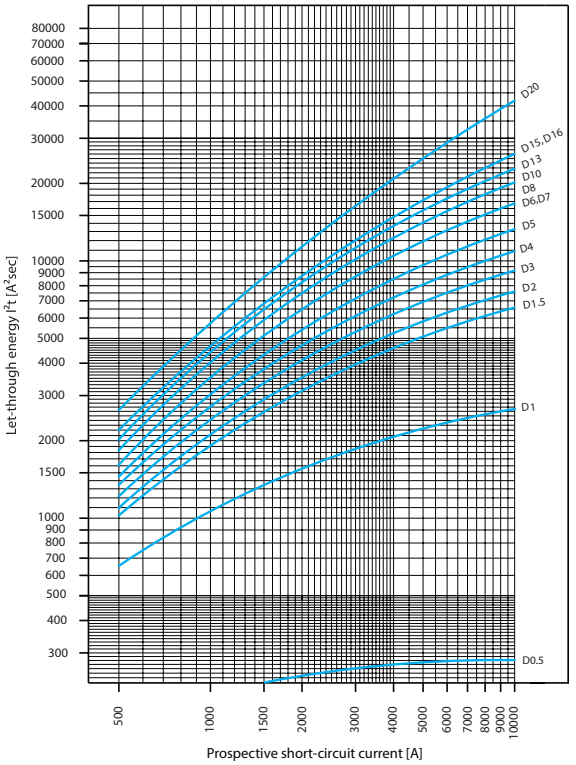

Characteristic D (25-40A), 240V

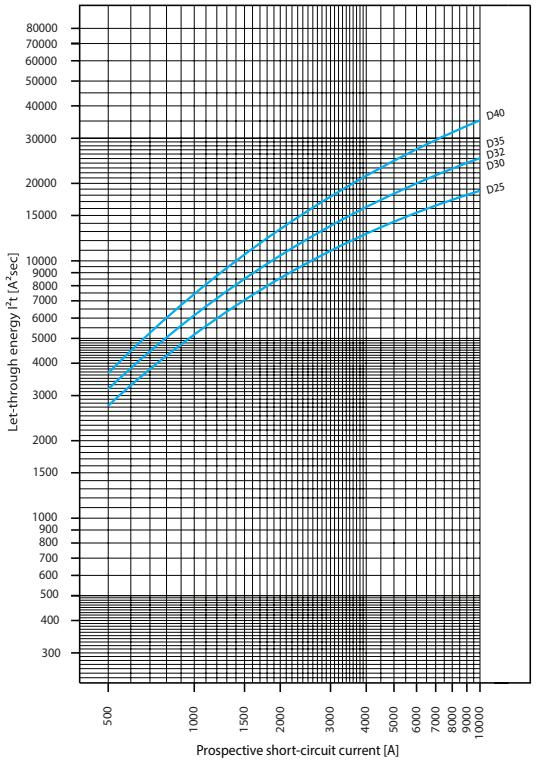

EATON FAZ-NA Series Technical Data

Power Loss at *In*			
Characteristic C			
In [A]	1p P[W]	2p P[W]	3p P[W]
0.5	1.6	3.2	4.7
1	1.1	2.2	3.4
1.5	1.3	2.6	3.9
2	1.4	2.8	4.3
3	1.2	2.4	3.6
4	1.4	2.9	4.3
5	1.9	3.7	5.6
6	1.2	2.3	3.5
7	1.4	2.8	4.3
8	1.4	2.8	4.2
10	1.8	3.6	5.3
13	2.4	4.7	7.1
15	1.9	3.8	5.6
16	2.1	4.3	6.4
20	2.9	5.8	8.7
25	3.1	6.2	9.3
30	3.0	6.0	9.0
32	3.4	6.8	10.2
35	3.7	7.4	11.0
40	4.0	8.1	12.1

Power Loss at *In*			
Characteristic D			
In [A]	1p P[W]	2p P[W]	3p P[W]
0.5	1.6	3.2	4.8
1	0.8	1.5	2.3
1.5	1.0	2.1	3.1
2	1.0	2.1	3.1
3	1.2	2.4	3.6
4	1.4	2.9	4.3
5	1.5	2.9	4.4
6	1.2	2.3	3.5
7	1.4	2.8	4.3
8	1.2	2.4	3.7
10	1.5	3.0	4.5
13	2.0	4.1	6.1
15	1.5	3.1	4.6
16	1.7	3.5	5.2
20	1.8	3.7	5.5
25	2.6	5.1	7.7
30	2.7	5.4	8.1
32	3.1	6.2	9.3
35	3.8	7.6	11.3
40	3.9	7.8	11.6

Tripping Curves

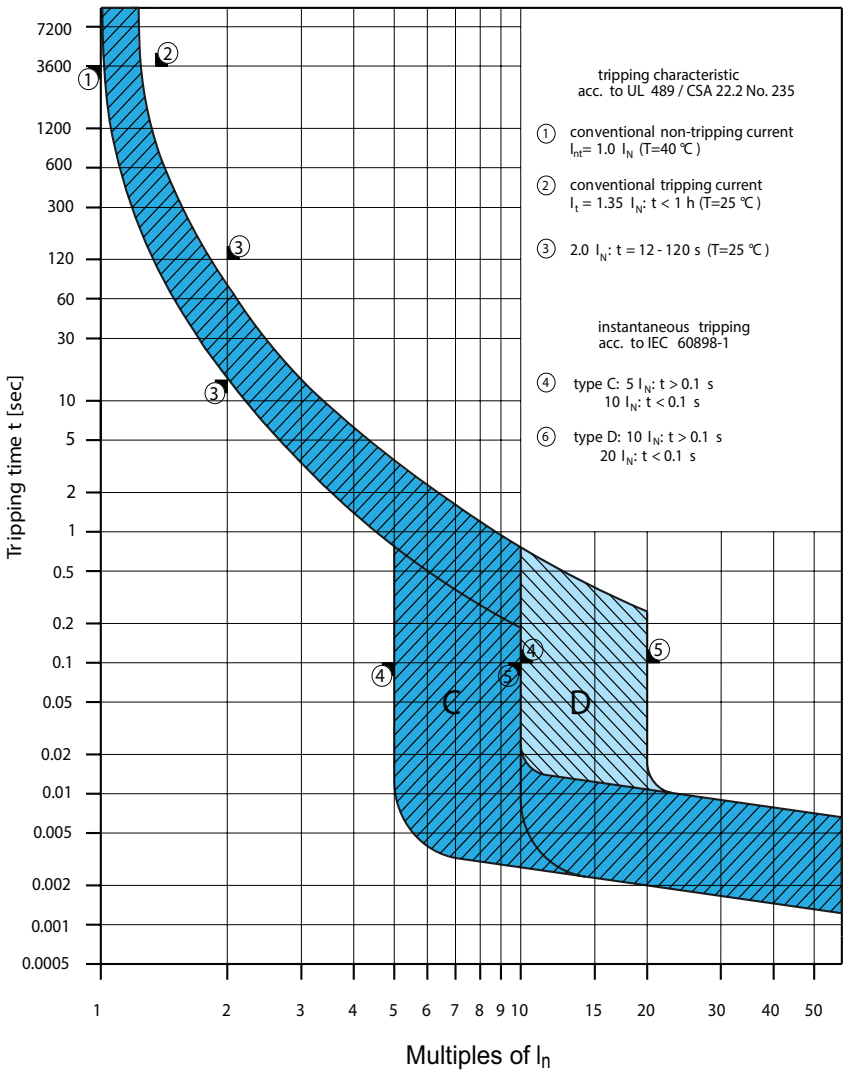

FAZ-NA Miniature Circuit Breakers Dimensions

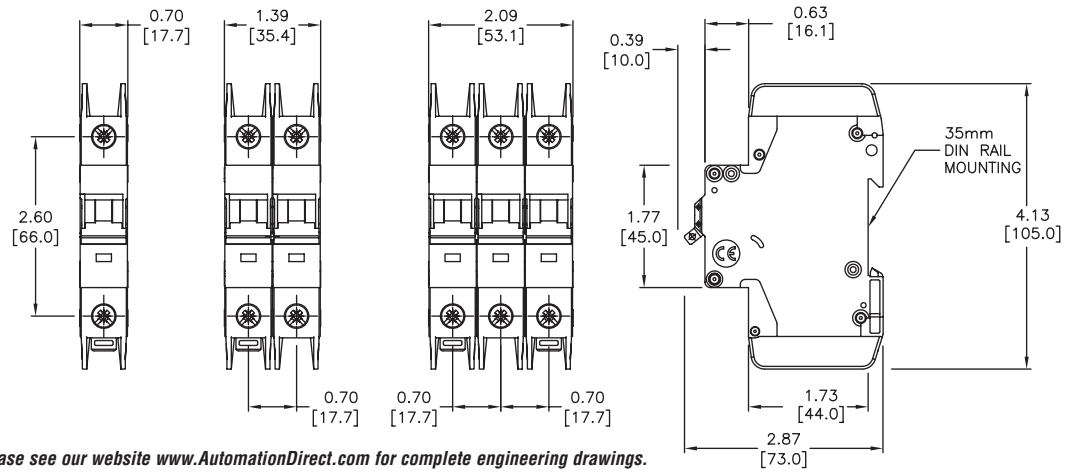

Please see our website www.AutomationDirect.com for complete engineering drawings. Dimensions are approximate. Not for construction purposes.

EATON FAZ-NA Series Technical Data

Influence of Ambient Temperature T on Load Carrying Capacity								
Device Market Current Rating In (A) at 40°C	In (A) at Higher Ambient Temperature							
	15°C	20°C	25°C	30°C	40°C	50°C	55°C	60°C
0.5	0.6	0.5	0.5	0.5	0.5	0.5	0.5	0.5
1.0	1.1	1.1	1.1	1.0	1.0	1.0	0.9	0.9
1.5	1.7	1.6	1.6	1.6	1.5	1.4	1.4	1.4
2.0	2.2	2.2	2.1	2.1	2.0	1.9	1.9	1.8
3.0	3.3	3.2	3.2	3.1	3.0	2.9	2.9	2.8
4.0	4.4	4.3	4.2	4.2	4.0	3.8	3.8	3.7
5.0	5.5	5.4	5.3	5.2	5.0	4.8	4.7	4.6
6.0	6.6	6.5	6.4	6.2	6.0	5.8	5.6	5.5
7.0	7.7	7.6	7.4	7.3	7.0	6.7	6.6	6.4
8.0	8.8	8.6	8.5	8.3	8.0	7.7	7.5	7.4
10.0	11.0	10.8	10.6	10.4	10.0	9.6	9.4	9.2
13.0	14.3	14.0	13.8	13.5	13.0	12.5	12.5	12.0
15.0	16.5	16.2	15.9	15.6	15.0	14.4	14.1	13.8
16.0	17.6	17.3	17.0	16.6	16.0	15.4	15.0	14.7
20.0	22.0	21.6	21.2	20.8	20.0	19.2	18.8	18.4
25.0	27.5	27.0	26.5	26.0	25.0	24.0	23.3	23.0
30.0	33.0	32.4	31.8	31.2	30.0	28.8	28.2	27.6
32.0	35.2	34.6	33.9	33.3	32.0	30.7	30.1	29.4
35.0	38.5	37.8	37.1	36.4	35.0	33.6	32.9	32.2
40.0	44.0	43.2	42.4	41.6	40.0	38.4	37.6	36.8

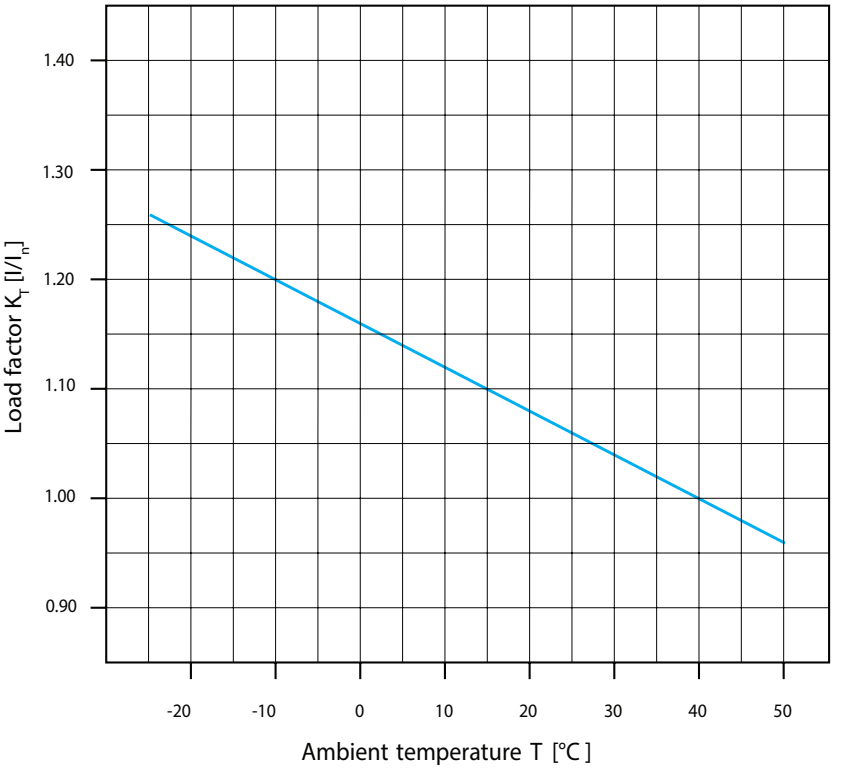

Maximum load I_L at ambient temperature T:
$I_L(T) = I_n K_T(T)$

I_L = Maximum Load
T = Ambient Temperature
I_N = Rated Current in Amps
K_T = Load Factor

EATON FAZ-NA Series Accessories

Field Mountable Accessories

- Auxiliary switch
- Alarm switch
- Shunt trip
- No tools required for mounting

ZNHK
Alarm/Aux Contact

ZIHK-NA
Auxiliary Contact

		ZNHK*	ZIHK-NA
Price		$20.75	$16.00
Electrical Data			
Contact function		2 Form C (one set changeover) (SPDT)	1 N.O. + 1 N.C. (DPST)
Rated voltage		230VAC / 110V AC/DC	600VAC / 230VAC / 120VAC
Frequency		50/60 Hz	
Rated current		2A / 0.5 A	1.2 A / 2A / 6A
Rated thermal current I_{th} 60947-5-1		2A / 250VAC	6A / 250VAC
60947-5-1 Rated operational current I_e	***Utilization category AC13***	3A / 250VAC	
	Utilization category AC15	2A / 250VAC	
	Utilization category DC12	0.5 A / 110VDC	0.5 A / 110VDC 0.25 A / 220VDC
Rated insulation voltage U_i		250VAC	
Minimal operational voltage per Contact U_{min}		5VDC	
Minimum operational current I_{min}		10mA DC	10 mA AC/DC
Rated peak withstand voltage U_{imp} (1.2/50µ)		2.5 kV	4kV
Conditional short-circuit current I_k w/ backup fuse 6A		1kA	1kA
Mechanical Data			
Tripping indicator "electrical tripping"		Blue/white	–
Frame size		45mm	
Mounting		Onto FAZ-NA	
Degree of protection, built-in		IP40	
Terminal protection		Finger and hand touch safe according to BGV A3, OVE-EN 6	
Terminals		Lift terminals	
Terminal capacity		20-18 AWG (0.75 - 2.5 mm²)	20-14 AWG (0.5 - 2.5 mm²)
Terminal screws		M3 (Posidrive Z0 - Phillips)	
Fastening torque of terminal screws		7 lb·in (0.79 N·m)	Max. 10.6 lb·in (1.2 N·m)

****Voltage of the FAZ-NA circuit breaker is limited to 300V with contact installed.***

Allowable Combinations of Accessories

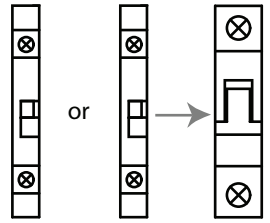

Z-IHK-NA Standard Auxilary | Z-NHK Auxilary / Alarm Switch | FAZ-NA Miniature Circuit Breaker

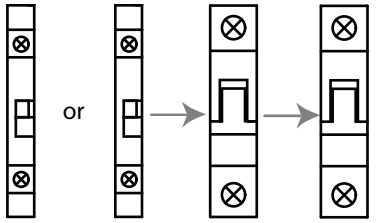

Z-IHK-NA Standard Auxilary | Z-NHK Auxilary / Alarm Switch | FAZ-XAA-NAxxx Shunt Trip | FAZ-NA Miniature Circuit Breaker

EATON FAZ-NA Series Accessories

Shunt Trip Release

- Remote release for subsequent mounting onto FAZ-NA
- Additional installation of standard auxiliary switch is possible
- Position indicator red-green

FAZ-XAA-NA Series

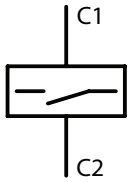

Circuit Diagram

	FAZ-XAA-NA12-110V	FAZ-XAA-NA110-415V
Price	$29.00	$29.00
Electrical Data		
Can be mounted onto	FAZ-NA	
Operational voltage range	12-110 VAC 12-60 VDC	110-415 VAC 110-230 VDC
Maximum inrush current	15A	2.1 A
Frequency	50/60 Hz	
Mechanical Data		
Frame size	45mm	
Height	4.13 in (105mm)	
Width	0.69 in (17.5 mm)	
Weight	0.28 lb (127g)	
Mounting	Quick fastening with two lock-in positions on EN 50022	
Degree of protection, built-in	IP40	
Terminal protection	Finger and hand touch safe according to BGV A3, OVE-EN 6	
Terminals	Open mouthed/lift	
Terminal capacity, one and two wires	18-10 AWG (0.8 - 5.3 mm²)	
Agency Approval	UL File # E257181, CSA 204453	

Note: To obtain the most current agency approval information, see the Agency Approval Checklist section on the specific part number's web page.

Lockout Attachment

Lockout Attachment				
Part Number	***Description***	***Weight***	***Qty***	***Price***
ZIS-SPE-1TE-3	Lockout attachment for Eaton FAZ-NA series supplementary protectors and FAZ-NA mini circuit breakers, suitable to prevent unauthorized activation of a de-energized circuit, accepts lock shackles up to 9/32 in. (7.1 mm) in diameter	0.10 lb (45g)	3	$25.50

ZIS-SPE-1TE-3
Lockout Attachment

ZIS-SPE-1TE-3 Installation

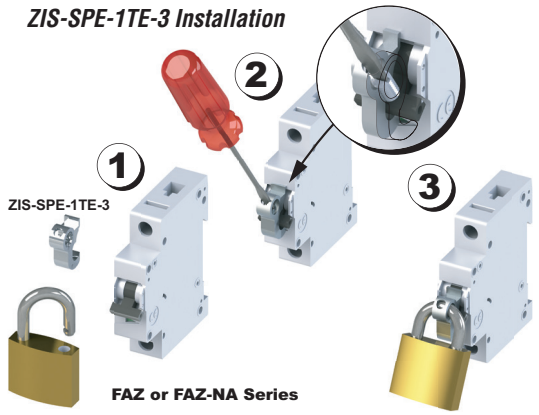

EATON FAZ-NA Series Accessories

Busbar System

(Without auxiliary contacts)

Busbar System for FAZ-NA Series Miniature Circuit Breakers		
Part Number	***Description***	***Price***
ZSVUL16-1P-1TE6SP	Busbar for connecting up to six (6) 1-pole FAZ-NA series circuit breakers	$8.50
ZSVUL16-1P-1TE12SP	Busbar for connecting up to twelve (12) 1-pole FAZ-NA series circuit breakers	$15.50
ZSVUL16-1P-1TE18SP	Busbar for connecting up to eighteen (18) 1-pole FAZ-NA series circuit breakers	$23.25
ZSVUL16-2P-2TE6SP	Busbar for connecting up to three (3) 2-pole FAZ-NA series circuit breakers	$9.50
ZSVUL16-2P-2TE12SP	Busbar for connecting up to six (6) 2-pole FAZ-NA series circuit breakers	$19.00
ZSVUL16-2P-2TE18SP	Busbar for connecting up to nine (9) 2-pole FAZ-NA series circuit breakers	$28.00
ZSVUL16-3P-3TE6SP	Busbar for connecting up to two (2) 3-pole FAZ-NA series circuit breakers	$10.00
ZSVUL16-3P-3TE12SP	Busbar for connecting up to four (4) 3-pole FAZ-NA series circuit breakers	$20.00
ZSVUL16-3P-3TE18SP	Busbar for connecting up to six (6) 3-pole FAZ-NA series circuit breakers	$29.50
Note: FAZ-NA Busbar is not for use with FAZ supplementary protectors.		

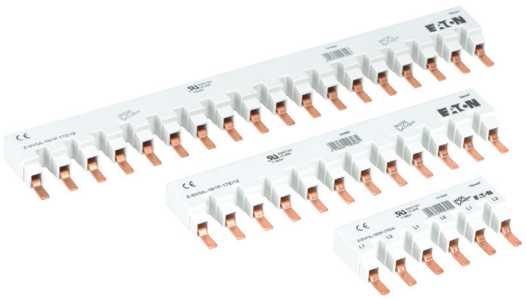

ZSVUL16-xP-xTExSP

Busbar Specifications			
Description	***UL489***		***IEC/EN60947-2***
Operating Voltage	480VAC	96VDC	240/415 VAC
Frequency	50/60 Hz	n/a	50/60 Hz
Rated impulse withstand Uimp	n/a		9.5 kV
Max Current - Ie Fed from End	80A @ 40°C		80A @ 30°C
Cross Section	n/a		16 mm²

Busbar Connection Diagrams

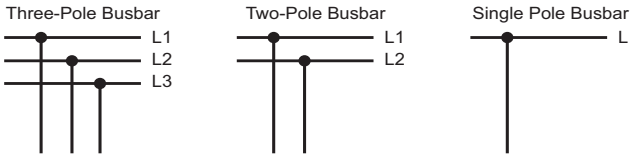

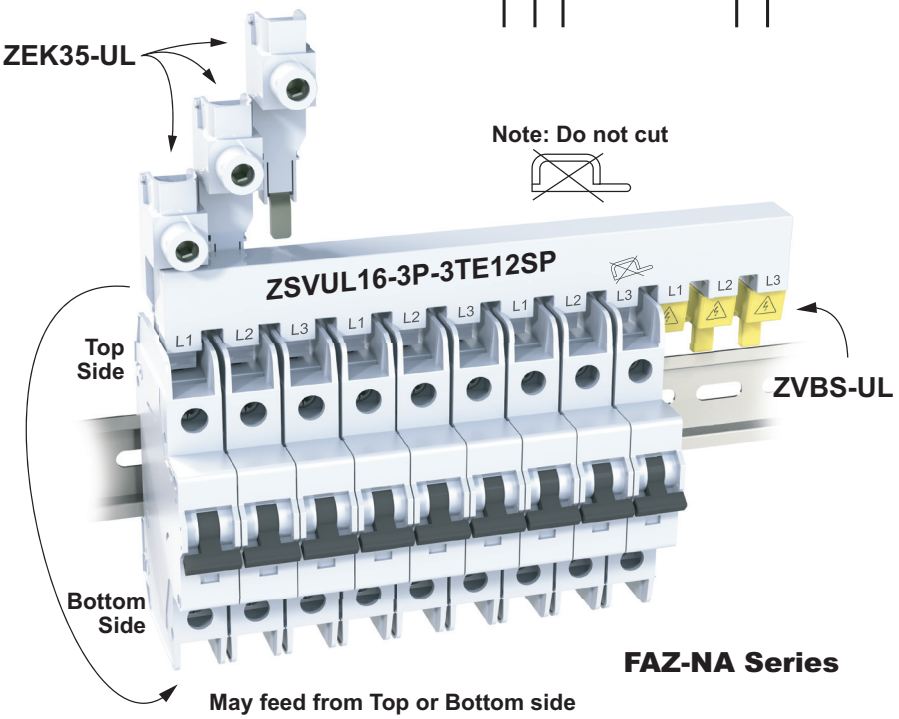

EATON FAZ-NA Series Accessories

Busbar Accessories

Busbar Accessories for FAZ-NA Series Miniature Circuit Breakers		
Part Number	***Description***	***Price***
ZVBS-UL	Busbar Shroud - covers for unused bus bar terminals, (10) 3-terminal covers per package	$21.75
ZVBS-UL-5	Busbar Shroud - covers for unused bus bar terminals, (5) 3-terminal covers per package	$11.75
ZEK35-UL	Wiring Lug, 2 - 14 AWG (35mm), 3 lugs per package	$31.50
ZEK35-UL-1	Wiring Lug, 2 - 14 AWG (35mm), 1 lug per package	$11.25

ZVBS-UL

ZEK35-UL

ZEK35-UL – Specifications			
Description	***UL489***		***IEC/EN60947-2***
Operating Voltage	480VAC	96VDC	240/415 VAC
Frequency	50/60 Hz	n/a	50/60 Hz
Rated impulse withstand - Uimp	n/a		9.5 kV
Max Current - Ie	80A @ 40°C		80A @ 30°C
	#2 - 14 AWG		2.5 - 35 mm²
	0.56 in		14mm
Agency Approval	UL File # E257182, E257181		

Note: To obtain the most current agency approval information, see the Agency Approval Checklist section on the specific part number's web page.

ZEK35-UL – Tightening Torque		
Tested Acc. To	***Cable Size***	***Tightening Torque***
UL 486A	#14 AWG	≥ 20 lb·in (2.3 N·m)
UL 486B	#8 - 12 AWG	≥ 25 lb·in (2.8 N·m)
UL 486E	#6 - 1 AWG	35 lb·in (4 N·m)

EATON FAZ-NA Series Accessories

Accessories Dimensions in [mm]

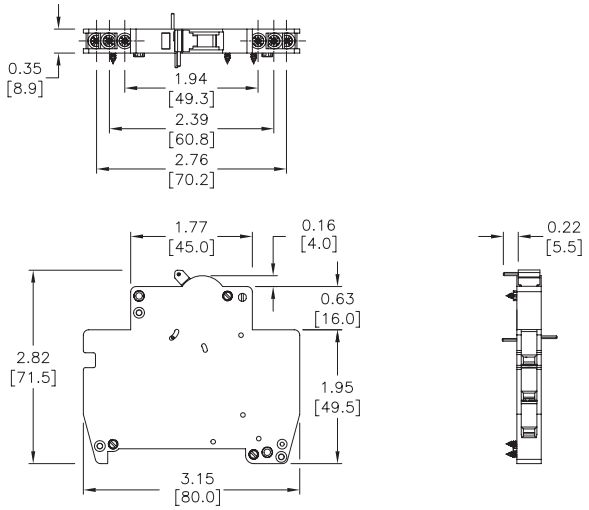

ZNHK

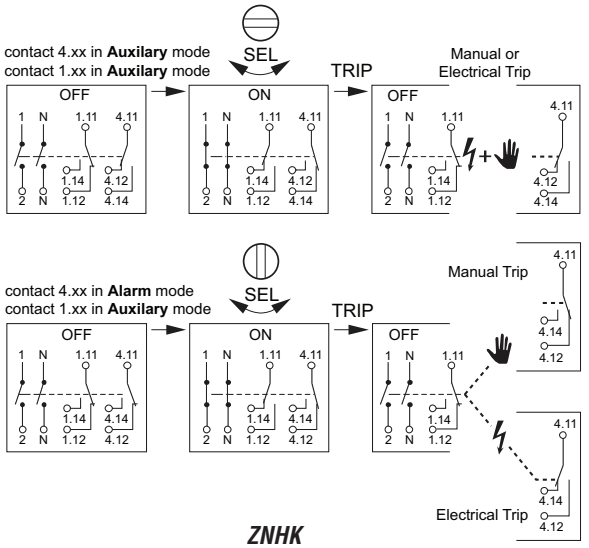

ZNHK Diagrams

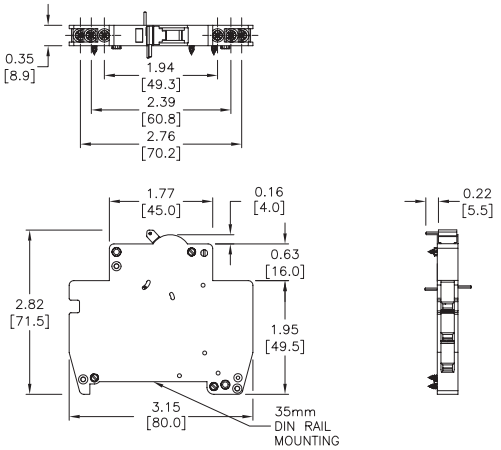

ZIHK-NA

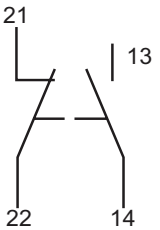

ZIHK-NA Diagram

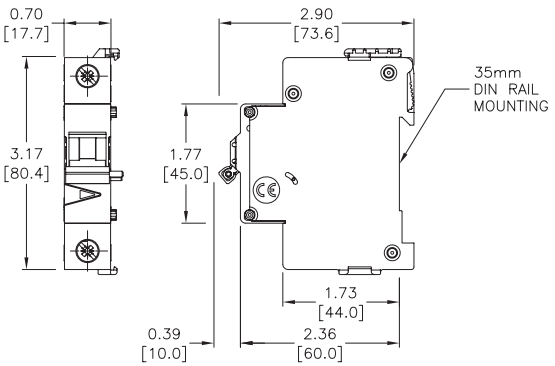

FAZ-XAA-NA-xxx

FAZ-NA Series Miniature Circuit Breakers

Connection Diagrams

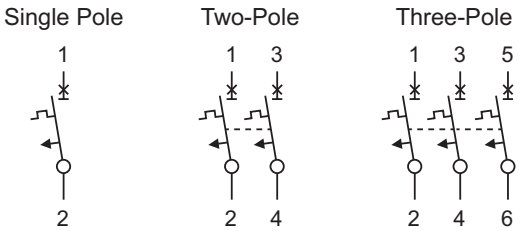

Please see our website www.AutomationDirect.com for complete engineering drawings. Dimensions are approximate. Not for construction purposes.

EATON FAZ-NA Series Accessories

Accessories Dimensions in [mm]

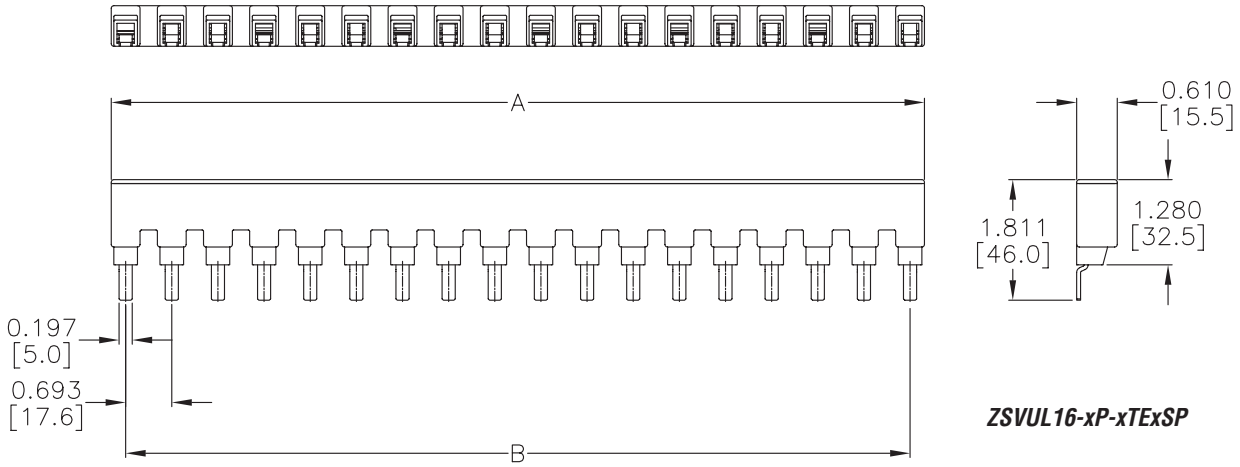

ZSVUL16-xP-xTExSP

FAZ-NA Busbar Length – in [mm]		
Part Number	***A***	***B***
ZSVUL16-xP-xTE6SP	3.90 [99.0]	3.46 [88.0]
ZSVUL16-xP-xTE12SP	8.06 [204.6]	7.62 [193.6]
ZSVUL16-xP-xTE18SP	12.21 [310.2]	11.78 [299.2]

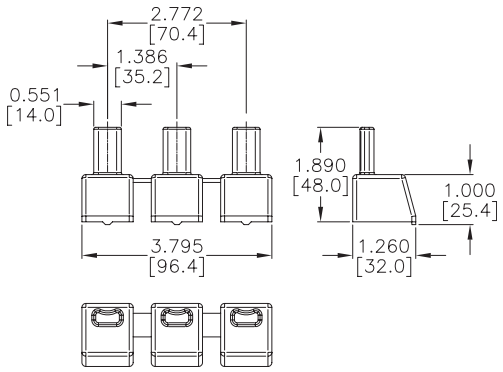

ZVBS-UL

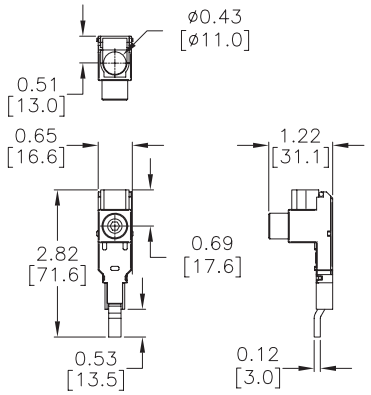

ZEK35-UL

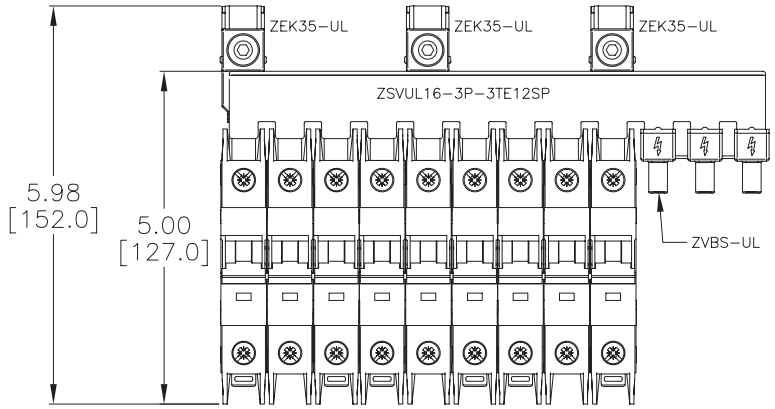

Please see our website www.AutomationDirect.com for complete engineering drawings. Dimensions are approximate. Not for construction purposes.

UL489 or UL1077?
What are your Circuit Protection Requirements?

An understanding of circuit types and circuit protection products is critical to ensure their proper application.
See NEC Sections 100, 430 and 409 for definitions.

The proper sizing of an overcurrent protection device is the responsibility of the customer and should be determined using the application standards of the NEC (National Electric Code), CEC (Canadian Electrical Code) or other applicable standards. Per fine print note of 2008 NEC Section 100 "A current in excess of rating may be accommodated by certain equipment and conductors for a given set of conditions. Therefore, the rules for overcurrent protection are specific for particular situations."

UL489
Branch Protection

UL1077
Supplementary Protection

What You Need to Know and Look For In Specifications
Certifications – Standards – Acceptance

UL489 Branch Protection	UL1077 Supplementary Protection
• UL489 Listed or Recognized • CSA C22.2 No. 5 • International ratings available depending on breaker type	• UL Recognized under UL1077 • CSA 22.2 No. 285 • IEC 60947-2 or IEC 898
Function	
• Opens automatically on Overload and Short Circuit when properly applied within its ratings • Protects wire and cable against Overload and Short Circuit	• Opens automatically on Overload and Short Circuit • Provides additional equipment protection where branch circuit protection is already provided or not required • Not suitable for the protection of branch circuit conductors
Applications	
• Branch circuit protection in control panels, panelboards, switchboards and motor control centers • Motor overload and motor short circuit protection (UL489 Recognized motor circuit protectors) for control panels and motor control centers	• Used within appliances or other electrical equipment such as control circuits, control power transformers, relays, PLC I/O points and lighting circuits • Ideal replacement for fuses that are applied as supplementary protection
Features	
• Bolted down or DIN-rail mounted • External handle mechanisms available • Field mounted accessories • Stand alone branch circuit protection • Various levels of protection (curve type) • High voltage and interruption levels (up to 100 kAIC @ 480V)	• DIN-Rail mounted • Field mounted accessories • Various levels of protection (curve type) • 10 kAIC @ 240 VAC • 10 kAIC @ 277 VAC and 5 kAIC @ 480VAC • 10 kAIC @ 48VDC

kAIC = thousands of Amps interrupt capacity

Summary

A Supplementary Protector can't be used for Branch Circuit Protection.
Understanding the difference between Branch Circuit Protection and Supplementary Protection helps to ensure their proper use.

UL 1077 Supplementary Protectors and UL 489 Circuit Breakers Application Guidelines

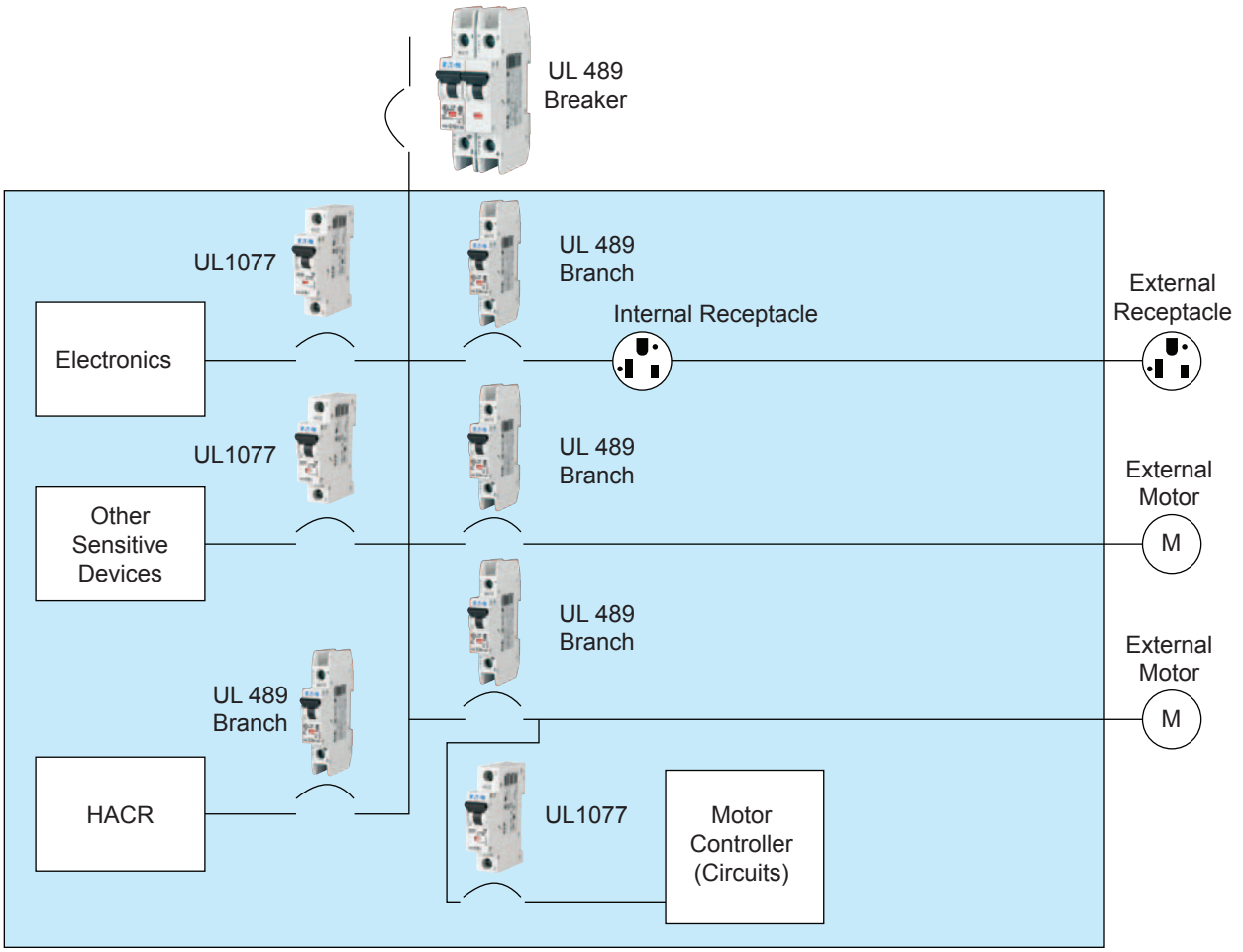

Example of UL 489 and UL 1077 Application

UL489 circuit breakers

Used for branch circuit protection, internal/external receptacles, external motors and HACR equipment (heating, air conditioning and refrigeration).

UL1077 supplementary protectors

Used for overcurrent protection within appliances or electrical equipment, where branch circuit protection is already provided or not required.

Note: UL489 devices can be used in place of UL1077; UL1077 devices cannot be used in place of UL489.

Features

- 1-channel isolated barrier
- 24 V DC supply (Power Rail)
- Input for 2-wire SMART transmitters and current sources
- Output for 4 mA ... 20 mA or 1 V ... 5 V
- Sink or source mode
- Housing width 12.5 mm
- Up to SIL 2 acc. to IEC 61508

Function

This isolated barrier is used for intrinsic safety applications.

The device supplies 2-wire SMART transmitters in a hazardous area, and can also be used with 2-wire SMART current sources.

It transfers the analog input signal to the safe area as an isolated current value.

Digital signals may be superimposed on the input signal in the hazardous or safe area and are transferred bi-directionally.

Selectable output of current source, sink mode, or voltage output is available via DIP switches.

If the HART communication resistance in the loop is too low, the internal resistance of 250 Ω between terminals 6 and 8 can be used.

Test sockets for the connection of HART communicators are integrated into the terminals of the device.

Application

The device supports the following SMART protocols:

- HART
- BRAIN

Assembly

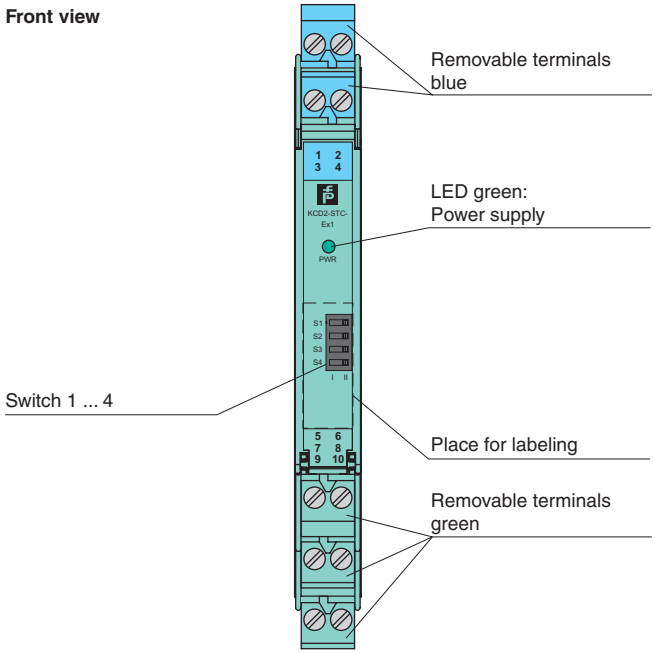

SIL 2

Connection

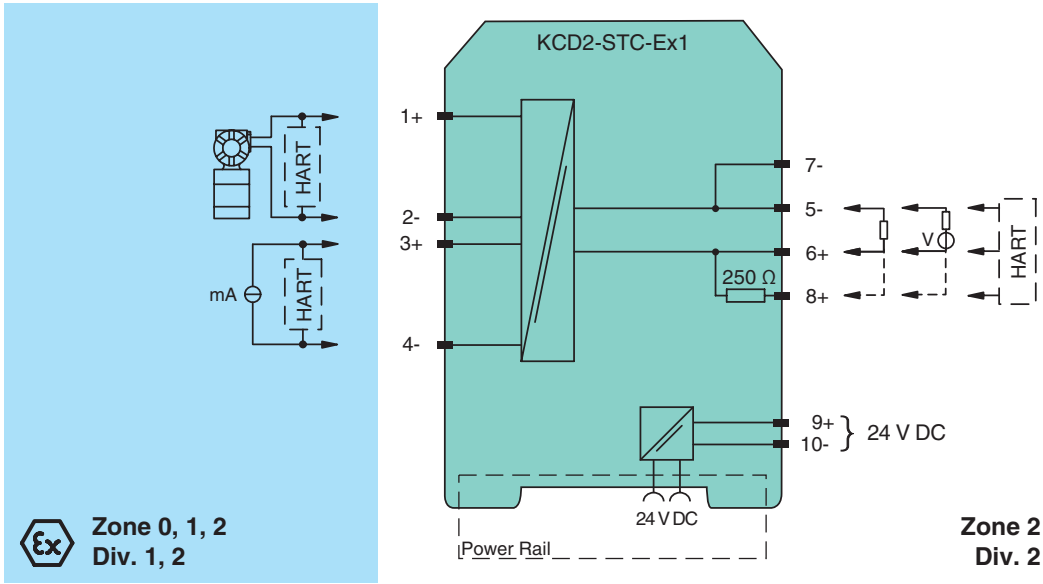

Release date 2016-06-14 09:21 Date of issue 2016-06-14 185535_eng.xml

General specifications		
Signal type		Analog input
Supply		
Connection		Power Rail or terminals 9+, 10-
Rated voltage	U_n	19 ... 30 V DC
Ripple		≤ 10 %
Rated current	I_n	≤ 45 mA
Power dissipation		≤ 800 mW
Power consumption		≤ 1.1 W
Input		
Connection		terminals 1+, 2-; 3+, 4-
Input signal		4 ... 20 mA limited to approx. 30 mA
Open circuit voltage/short-circuit current		terminals 1+, 2-: 22 V / 30 mA
Voltage drop		terminals 3+, 4- : approx. 5 V
Available voltage		terminals 1+, 2-: ≥ 15 V at 20 mA
Output		
Connection		terminals 5-, 6+
Load		0 ... 300 Ω (source mode)
Output signal		4 ... 20 mA or 1 ... 5 V (on 250 Ω, 0.1 % internal shunt) 4 ... 20 mA (sink mode), operating voltage 15.5 ... 26 V
Ripple		20 mV $_{rms}$
Transfer characteristics		
Deviation		at 20 °C (68 °F) ≤ ± 0.1 % incl. non-linearity and hysteresis (source mode 4 ... 20 mA) ≤ ± 0.2 % incl. non-linearity and hysteresis (sink mode 4 ... 20 mA) ≤ ± 0.2 % incl. non-linearity and hysteresis (source mode 1 ... 5 V)
Influence of ambient temperature		< 2 µA/K (0 ... 60 °C (32 ... 140 °F)); < 4 µA/K (-20 ... 0 °C (-4 ... 32 °F)) (source mode and sink mode 4 ... 20 mA) < 0.5 mV/K (0 ... 60 °C (32 ... 140 °F)); < 1 mV/K (-20 ... 0 °C (-4 ... 32 °F)) (source mode 1 ... 5 V)
Frequency range		field side into the control side: bandwidth with 0.5 V_{pp} signal 0 ... 3 kHz (-3 dB) control side into the field side: bandwidth with 0.5 V_{pp} signal 0 ... 3 kHz (-3 dB)
Settling time		≤ 200 ms
Rise time/fall time		≤ 20 ms
Electrical isolation		
Input/Output		reinforced insulation acc. to EN 50178, rated insulation voltage 300 V_{eff}
Input/power supply		reinforced insulation acc. to EN 50178, rated insulation voltage 300 V_{eff}
Output/power supply		reinforced insulation acc. to EN 50178, rated insulation voltage 300 V_{eff}
Directive conformity		
Electromagnetic compatibility		
Directive 2014/30/EU		EN 61326-1:2013 (industrial locations)
Conformity		
Electromagnetic compatibility		NE 21:2006
Degree of protection		IEC 60529:2001
Ambient conditions		
Ambient temperature		-20 ... 60 °C (-4 ... 140 °F)
Mechanical specifications		
Degree of protection		IP20
Mass		approx. 100 g
Dimensions		12.5 x 114 x 124 mm (0.5 x 4.5 x 4.9 inch) , housing type A2
Mounting		on 35 mm DIN mounting rail acc. to EN 60715:2001
Data for application in connection with Ex-areas		
EC-Type Examination Certificate		CESI 06 ATEX 021
Group, category, type of protection		Ex II (1)G [Ex ia Ga] IIC , Ex II (1)D [Ex ia Da] IIIC , Ex I (M1) [Ex ia Ma] I
Input		[Ex ia Ga] IIC, [Ex ia Da] IIIC, [Ex ia Ma] I
Supply		
Maximum safe voltage	U_m	250 V AC (Attention! U_m is no rated voltage.)
Equipment		terminals 1+, 2-
Voltage	U_o	25.2 V
Current	I_o	100 mA
Power	P_o	630 mW
Equipment		terminals 3+, 4-
Voltage	U_i	< 30 V
Current	I_i	< 128 mA
Voltage	U_o	7.2 V
Current	I_o	100 mA

Release date 2016-06-14 09:21 Date of issue 2016-06-14 185535_eng.xml

Power P_o	25 mW
Statement of conformity	PF 06 CERT 0973 X
Group, category, type of protection, temperature class	Ex II 3G Ex nA IIC T4 Gc
Electrical isolation	
Input/Output	safe electrical isolation acc. to IEC/EN 60079-11, voltage peak value 375 V
Input/power supply	safe electrical isolation acc. to IEC/EN 60079-11, voltage peak value 375 V
Directive conformity	
Directive 2014/34/EU	EN 60079-0:2012+A11:2013 , EN 60079-11:2012 , EN 50303:2000
International approvals	
FM approval	
Control drawing	116-0419 (cFMus)
UL approval	
Control drawing	116-0420 (cULus)
IECEx approval	IECEx CES 06.0001
Approved for	[Ex ia Ga] IIC , [Ex ia Da] IIIC , [Ex ia Ma] I
General information	
Supplementary information	EC-Type Examination Certificate, Statement of Conformity, Declaration of Conformity, Attestation of Conformity and instructions have to be observed where applicable. For information see www.pepperl-fuchs.com.

Release date 2016-06-14 09:21 Date of issue 2016-06-14 185535_eng.xml

Configuration

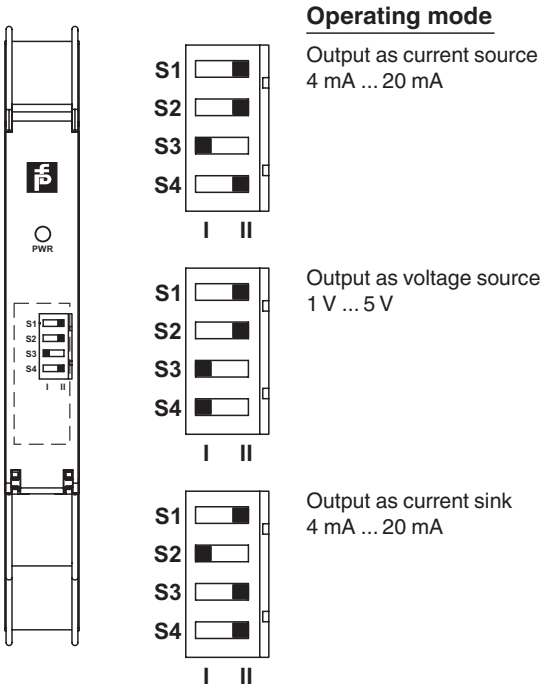

Factory settings: output as current source 4 mA ... 20 mA

Accessories

Power feed module KFD2-EB2

The power feed module is used to supply the devices with 24 V DC via the Power Rail. The fuse-protected power feed module can supply up to 150 individual devices depending on the power consumption of the devices. Collective error messages received from the Power Rail activate a galvanically-isolated mechanical contact.

Power Rail UPR-03

The Power Rail UPR-03 is a complete unit consisting of the electrical insert and an aluminium profile rail 35 mm x 15 mm. To make electrical contact, the devices are simply engaged.

Profile Rail K-DUCT with Power Rail

The profile rail K-DUCT is an aluminum profile rail with Power Rail insert and two integral cable ducts for system and field cables. Due to this assembly no additional cable guides are necessary.

Power Rail and Profile Rail must not be fed via the device terminals of the individual devices!

Release date 2016-06-14 09:21 Date of issue 2016-06-14 185535_eng.xml

MODEL #: 2865434

Isolation amplifier - MACX MCR-EX-SL-NAM-R - 2865434

Please be informed that the data shown in this PDF Document is generated from our Online Catalog. Please find the complete data in the user's documentation. Our General Terms of Use for Downloads are valid
(http://phoenixcontact.com/download)

Ex i NAMUR isolating amplifier For operating proximity sensors and switches in Ex areas. The signals are transmitted via a relay output (PDT contact) to the safe area. Line fault detection (LFD), 3-way isolation, SIL 2.

Product Features

- Power supply and error indication possible via DIN rail connector
- Installation in zone 2, protection type "n" (EN 60079-15) permitted
- Up to SIL 2 according to EN 61508
- Line fault detection (LFD), can be activated/deactivated, error indicated by red flashing LED with de-excitation of output relay
- 3-way electrical isolation
- LED indicators for supply voltage, switching state, and malfunction according to NAMUR NE 44
- Relay signal output (PDT)
- Input for NAMUR proximity sensors (EN 60947-5-6), floating contacts or contacts with resistance circuit, [Ex ia] IIC
- Direction of operation can be selected (operating or closed circuit current behavior)

SIL
IEC 61508

Key commercial data

Packing unit	1 pc
Weight per Piece (excluding packing)	165.8 GRM
Custom tariff number	85437090
Country of origin	Germany

Technical data

Note

Utilization restriction	EMC: class A product, see manufacturer's declaration in the download area

Dimensions

Isolation amplifier - MACX MCR-EX-SL-NAM-R - 2865434

Technical data

Dimensions

Width	12.5 mm
Height	99 mm
Depth	114.5 mm

Ambient conditions

Ambient temperature (operation)	-20 °C ... 60 °C (Any mounting position)
Ambient temperature (storage/transport)	-40 °C ... 85 °C
Maximum altitude	≤ 2000 m
Permissible humidity (operation)	10 % ... 95 % (non-condensing)
Noise immunity	EN 61000-6-2 EN 61326
Degree of protection	IP20

Input data

Non-load voltage	~ 8 V DC
Switching points (attenuated)	< 1.2 mA (blocking)
Switching points (unattenuated)	> 2.1 mA (conductive)

Output data

Switching output	Relay output
Contact type	1 PDT
Contact material	$AgSnO_2$, hard gold-plated
Maximum switching voltage	250 V AC (2 A)
	120 V DC (0.2 A)
	30 V DC (2 A)
Maximum switching capacity	500 VA
Mechanical service life	10^7 cycles

Power supply

Nominal supply voltage	24 V DC -20 % ... +25 %
Supply voltage range	19.2 V DC ... 30 V DC (24 V DC (-20% ... +25%))
Max. current consumption	21 mA (24 V DC)
Power consumption	< 650 mW

Connection data

Conductor cross section solid min.	0.2 mm²
Conductor cross section solid max.	2.5 mm²
Conductor cross section stranded min.	0.2 mm²
Conductor cross section stranded max.	2.5 mm²
Conductor cross section AWG/kcmil min.	24
Conductor cross section AWG/kcmil max	14

Isolation amplifier - MACX MCR-EX-SL-NAM-R - 2865434

Technical data

Connection data

Stripping length	7 mm
Screw thread	M3
Connection method	Screw connection
Tightening torque, min	0.5 Nm
Tightening torque max	0.6 Nm

General

No. of channels	1
Status display	Green LED (supply voltage)
	LED yellow (switching state)
	Red LED (line errors)
Inflammability class according to UL 94	V0
Pollution degree	2
Surge voltage category	II
Housing material	PA 66-FR
Color	green
Designation	Input/output
Electrical isolation	375 V (Peak value in accordance with EN 60079-11)
Designation	Input/output/supply, DIN rail connector
Electrical isolation	300 V_{rms} (Rated insulation voltage (surge voltage category II; pollution degree 2, safe isolation as per EN 61010-1))
	2.5 kV (50 Hz, 1 min., test voltage)
Designation	Input/supply, DIN rail connector
Electrical isolation	375 V (Peak value in accordance with EN 60079-11)
Conformance	CE-compliant, additionally EN 61326
ATEX	# II (1) G [Ex ia Ga] IIC
	# II (1) D [Ex ia Da] IIIC
IECEx	[Ex ia Ga] IIC
	[Ex ia Da] IIIC
	Ex nA nC IIC T4 Gc
UL, USA / Canada	Class I Div 2; IS for Class I, II, III Div 1

Safety characteristic data

Integrity requirement	IEC 61508 - Low demand
Designation	Non-inverted operation
Equipment type	Type A
Safety Integrity Level (SIL)	Up to 2
Safe Failure Fraction (SFF)	78 %

Isolation amplifier - MACX MCR-EX-SL-NAM-R - 2865434

Technical data

Safety characteristic data

λ_{SU}	2.49 x 10^{-7} (249 FIT)
λ_{SD}	6 x 10^{-9} (6 FIT)
λ_{DU}	6.4 x 10^{-8} (64 FIT)
λ_{DD}	7 x 10^{-9} (7 FIT)
Probability of a hazardous failure on demand (PFD_{AVG})	3.09 x 10^{-4} (1 year)
	6.17 x 10^{-4} (2 years)
	1.54 x 10^{-3} (5 years)
Diagnostic coverage (DC)	DC_S = 2.4%, DC_D = 9%
Integrity requirement	IEC 61508 - Low demand
Designation	Inverted operation
Equipment type	Type A
Safety Integrity Level (SIL)	Up to 2
Safe Failure Fraction (SFF)	78 %
λ_{SU}	2.48 x 10^{-7} (248 FIT)
λ_{SD}	1 x 10^{-9} (1 FIT)
λ_{DU}	6.2 x 10^{-8} (62 FIT)
λ_{DD}	6 x 10^{-9} (6 FIT)
Probability of a hazardous failure on demand (PFD_{AVG})	3.01 x 10^{-4} (1 year)
	6.02 x 10^{-4} (2 years)
	1.5 x 10^{-3} (5 years)
Diagnostic coverage (DC)	DC_S = 0.4%, DC_D = 8%

Safety data

Max. internal inductance L_i	negligible
Max. internal capacitance C_i	11 nF
Max. output voltage U_o	9.6 V
Max. output current I_o	10 mA
Max. output power P_o	25 mW
Group	IIC
Max. external inductivity L_o	100 mH
Max. external capacity C_o	510 nF
Group	IIC
Max. external inductivity L_o	5 mH
Max. external capacity C_o	840 nF
Group	IIC

Isolation amplifier - MACX MCR-EX-SL-NAM-R - 2865434

Technical data

Safety data

Max. external inductivity L_o	1 mH
Max. external capacity C_o	1.2 µF
Group	IIC
Max. external inductivity L_o	10 µH
Max. external capacity C_o	3.6 µF
Group	IIB
Max. external inductivity L_o	100 mH
Max. external capacity C_o	2.7 µF
Group	IIB
Max. external inductivity L_o	5 mH
Max. external capacity C_o	4.4 µF
Safety-related maximum voltage U_m	253 V AC (125 V DC)

Classifications

eCl@ss

eCl@ss 4.0	27210121
eCl@ss 4.1	27210121
eCl@ss 5.0	27210121
eCl@ss 5.1	27210121
eCl@ss 6.0	27210121
eCl@ss 7.0	27210121
eCl@ss 8.0	27210121

ETIM

ETIM 2.0	EC001430
ETIM 3.0	EC001599
ETIM 4.0	EC001599
ETIM 5.0	EC001599

UNSPSC

UNSPSC 6.01	30211506
UNSPSC 7.0901	39121008
UNSPSC 11	39121008
UNSPSC 12.01	39121008
UNSPSC 13.2	39121008

Isolation amplifier - MACX MCR-EX-SL-NAM-R - 2865434

Approvals

Approvals

Approvals

UL Listed / cUL Listed / GL / Functional Safety / cULus Listed

Ex Approvals

IECEx / UL Listed / cUL Listed / ATEX / IECEx / ATEX / cULus Listed

Approvals submitted

Approval details

UL Listed

cUL Listed

GL

Functional Safety

cULus Listed

Drawings

Isolation amplifier - MACX MCR-EX-SL-NAM-R - 2865434

Block diagram

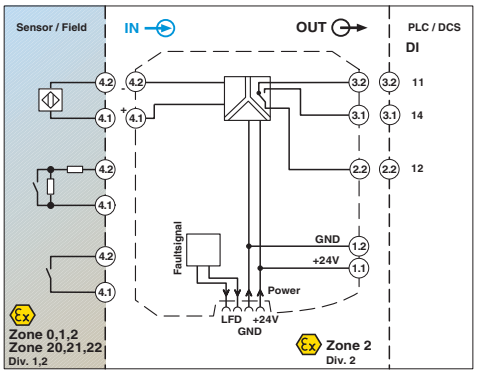

Dimensioned drawing

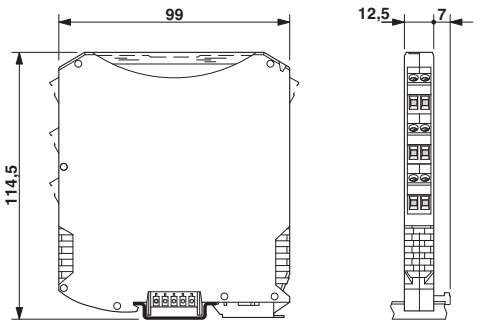

Phoenix Contact 2014 © - all rights reserved

MODEL #: FC-11

Prices as of April 27, 2016. Check Web site for most current prices.

FC Series Signal Conditioners

FC-33

DC Selectable Signal Conditioner with 3-way isolation

Field configurable input and output ranges of 0-5V, 0-10 V, 0-20 mA and 4-20 mA with 1500 VDC isolation between input and output, and 1500 VDC isolation from 24 volt power and input/output. LED indicates normal operation and is used in conjunction with the calibration pushbutton for the internal calibration process.

- 3-way 1500 V isolation
- Push button calibration

FC-T1

Thermocouple/mV Isolated Signal Conditioner

Field configurable input for type J, K, E, T, R, S, B, N and C thermocouples or ±156.25 mV inputs with 1500 VDC isolation between input and the 4-20 mA output. Cold junction compensation and burnout detection. Alarm/run LED.

- 1500 V isolation
- Cold junction compensation (CJC)
- Internal diagnostics (burnout detection or calibration errors)

FC-35B

Unipolar Voltage or Current to Bipolar Voltage Signal Conditioner

Field configurable input and output, unipolar input ranges of 0-5V, 0-10 V, 0-20 mA or 4-20 mA, and bipolar output ranges of ±100 mV, ±50 mV, ±5V, ±10V, ±15V. Field calibrated with offset and span adjustments.

FC-3RLY2

Analog Input, 2-Relay, Limit Alarm

Field configurable analog to relay limit alarm powered by 24VAC/VDC and Input signal ranges of 0-15V, 0-30V or 0-20mA. Trip/Release Point programmed via DIP switches. LED's indicate operating status.

FC-ISO-D

Encoder Signal Conditioner and Optical Isolator - Differential Line Driver Output

Ideal for use with single-ended (open collector, NPN, pull-up, push-pull, totem pole) or differential line driver encoders. Three complementary inputs (A, B, Z, A-not, B-not, Z-not) are rated for 4.5-7.5 and 12-26 VDC and frequency response up to 1 MHz.

Optical isolation separates the input signals from three differential line driver outputs (A, B, Z, A-not, B-not, Z-not) rated for 5VDC.

FC-11

4-20 mA Isolated Signal Conditioner

Loop powered 4-20 mA input/output signal with 1500 VDC isolation between input and output.

- 1500 V isolation
- Loop powered

FC-R1

RTD Input Signal Conditioner

Loop powered, non-isolated, 3-wire unit converts an RTD input to a linear 4-20 mA signal. User selectable CU10, PT100 or PT1000 input.

FC-P3

Potentiometer Input, Analog Output Signal Conditioner

Field configurable input and output, input ranges of 3-wire potentiometer 0 to 100 ohms through 0 to 100 kilohms, and output ranges of 0-5V, 0-10 V, 0-20 mA or 4-20 mA. Field calibrated to 10% of potentiometer full range.

FC-B34

Bipolar Voltage to Unipolar Voltage or Current Signal Conditioner

Field configurable input and output, bipolar input ranges of ±100 mV, ±50 mV, ±5V, ±10V, ±15V, and unipolar output ranges of 0-5V, 0-10 V, 0-20 mA or 4-20 mA. Field calibrated with offset and span adjustments.

FC-3RLY4

Analog Input, 4-Relay, Limit Alarm

Field configurable analog to relay limit alarm powered by 24VAC/VDC and Input signal ranges of 0-15V, 0-30V or 0-20mA. Trip/Release Point programmed via DIP switches. LED's indicate operating status.

FC-ISO-C

Encoder Signal Conditioner and Optical Isolator - Open Collector Output

Ideal for use with single-ended (open collector, NPN, pull-up, push-pull, totem pole) or differential line driver encoders. Three complementary inputs (A, B, Z, A-not, B-not, Z-not) are rated for 4.5-7.5 and 12-26 VDC and frequency response up to 1 MHz.

Optical isolation separates the input signals from three complementary open collector outputs (A, B, Z, A-not, B-not, Z-not) rated for 5-36 VDC that can be used in single-ended configurations.

FC-11 4-20mA Isolated Signal Conditioner

$90.00

c UL us *UL file E200031*

Overview

The FC-11 is a DIN-rail or side-mount, 4-20 mA Input/Output loop powered signal conditioner with 1500 VDC isolation between input and output.

The FC-11 has a user-selectable factory calibration. The output can also be calibrated with OFFSET (zero) and SPAN (full scale) adjustments. The OFFSET has an adjustment range of 0 to 25% of full scale input and the SPAN has an adjustment of 80% to 102%.

Application

The FC-11 isolated input/output signal conditioner is useful in eliminating ground loops and sinking/sourcing issues when interfacing to PLC analog input modules. The FC-11 design feature solves many types of configuration problems. For example, the signal conditioner can solve the problem of connecting a sinking input transmitter to a sinking analog input module.

Specifications	
Input Ranges ***Extended Input range[1]***	4-20 ma 3.5 mA to 20.6 mA, ± 1%
Input Burden Voltage[2]	6.8 VDC
Maximum Input Current	34 mA @ 9.7 VDC
Output Burden Voltage[3]	8.5 VDC minimum
Output Range ***Extended Output Range[1]***	4-20 mA 3.5 mA to 20.6 mA, ± 1%
Maximum Load Impedance	650 Ω @ 24 VDC, 1000 Ω 29 VDC
Maximum Output Current	23 mA @ 29 VDC
Sample Duration Time	18 mS maximum
Linearity Error	0.1% FSO maximum
Max Inaccuracy of Output	0.05% @ 25°C, FSO maximum, 0.3% @ 0-60°C, FSO maximum
Filter Characteristics	-3 dB @ 200 Hz, -6 dB / octave
Stability	0.1% FSO maximum
Accuracy vs. Temperature	± 0.0065% / °C (65ppm / °C)
Isolation	1500 VDC Input - Output
Operating Temperature	0 to 60°C (32 to 140°F)
Storage Temperature	-20 to 70°C (-4 to 158°F)
Relative Humidity	5 to 90% (non-condensing)
Vibration	ML STD 810C 514.2
Shock	ML STD 810C 516.2
Noise Immunity	NEMA ICS3-304

NOTES:

1. ***When adjusting SPAN and OFFSET potentiometer***
2. ***Voltage required to power internal circuitry***
3. ***Formula, [(output load) x 20 mA] + 8.5 V,.i.e.: 13.5 VDC @ 250 Ω***
4. ***Internal analog converter resolution is 12-bit***

Typical User Wiring

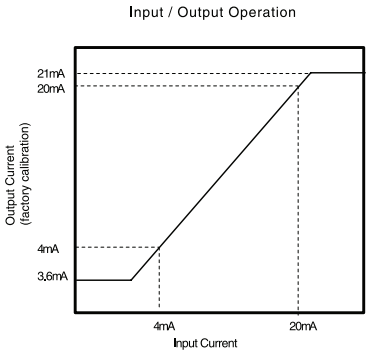

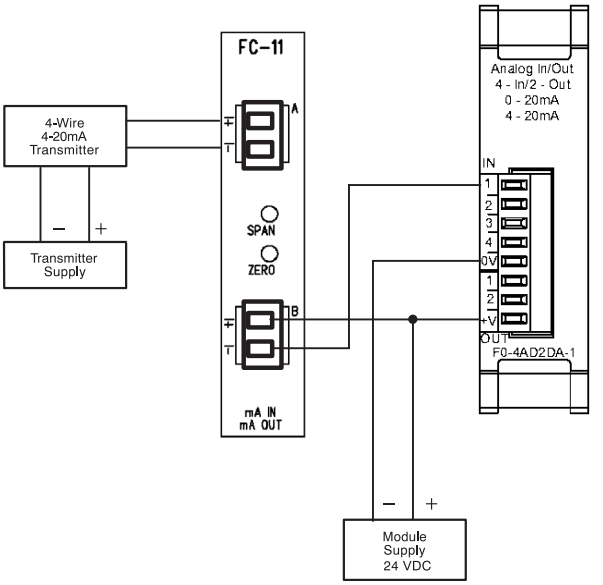

4-20 mA Input Isolated to 4-20 mA Output (example)

MODEL #: 2904376

UNO-PS/1AC/24DC/150W

Primary-switched power supply unit

Data sheet
106261_en_02

© PHOENIX CONTACT 2015-05-13

1 Description

The UNO POWER power supply makes a worldwide impression thanks to maximum energy efficiency. Low idling losses (No Load) and the high degree of efficiency save energy.

Thanks to its high power density, the UNO POWER power supply unit is the ideal solution, particularly in compact control boxes.

Features

- Worldwide use thanks to input voltage range of 85 V AC ... 264 V AC
- Superior system availability through reliable power supply with 24 V DC ... 28 V DC
- Maximum energy efficiency thanks to optimized efficiency over the entire operating range of the power supply unit and low idling losses
- Particularly compact: 150 W of power from this narrow power supply, which is just 37 mm wide
- Reliable supply thanks to the high MTBF (Mean Time Between Failure) greater than 500 000 h (40°C)
- High operating range from -25 °C to 70 °C
- Idle and short-circuit-proof

Make sure you always use the latest documentation.
It can be downloaded from the product at phoenixcontact.net/products.

2 Table of contents

1 Description 1

2 Table of contents 2

3 Ordering data 3

4 Technical data 4

5 Intended use 7

6 Structure 7
- 6.1 Device elements 7
- 6.2 Block diagram 7

7 Assembly 8
- 7.1 Unpacking 8
- 7.2 Mounting the power supply unit 8
- 7.3 Mounting on a DIN rail 10
- 7.4 Normal mounting position 10

8 Installing the power supply unit 11
- 8.1 Safety regulations and installation notes 11
- 8.2 Mains connection 11
- 8.3 Device connections 12
- 8.4 Connecting cables 12

9 Operating behavior of the power supply unit 13
- 9.1 Normal operation 13
- 9.2 Overload response 13
- 9.3 Behavior at ambient temperatures > 55°C 13
- 9.4 Behavior in the case of alternative mounting positions 14

10 Operating the power supply unit 17
- 10.1 Function monitoring 17
- 10.2 Operating power supply units in parallel 18

11 Removal 19
- 11.1 Removing the power supply unit 19
- 11.2 Notes on disposal 19

3 Ordering data

Description	Type	Order No.	Pcs./Pkt.
Primary-switched UNO power supply for DIN rail mounting, input: 1-phase, output: 24 V DC/150 W	UNO-PS/1AC/24DC/150W	2904376	1

Accessories	Type	Order No.	Pcs./Pkt.
Redundancy module, 5 V - 24 V DC, 2 x 10 A, 1 x 20 A.	UNO-DIODE/5-24DC/2X10/1X20	2905489	1

Our range of accessories is being continually extended, our current range can be found in the download area.

4 Technical data

Input data	
Nominal input voltage	100 V AC ... 240 V AC
Input voltage range	85 V AC ... 264 V AC
AC frequency range	45 Hz ... 65 Hz
Current consumption	1.4 A (120 V AC) 0.8 A (230 V AC)
Inrush current limitation	< 50 A (typical)
I^2t	< 0.8 A^2s
Typical response time	< 1 s
Power failure bypass	> 20 ms (120 V AC) > 20 ms (230 V AC)
Protective circuit	Transient surge protection Varistor
Input fuse, integrated	2.5 A (slow-blow, internal)
Choice of suitable fuses	6 A ... 16 A (Characteristics B, C, D, K)

Input connection data	
Connection method	Screw connection
Conductor cross section, solid	0.2 mm^2 ... 2.5 mm^2
Conductor cross section, stranded	0.2 mm^2 ... 2.5 mm^2
Conductor cross section AWG/kcmil	24 ... 14
Stripping length	8 mm
Screw thread	M3
Tightening torque	0.5 Nm ... 0.6 Nm

Output data	
Nominal output voltage	24 V DC ±1 %
Setting range of the output voltage	24 V DC ... 28 V DC ±1 %
Output current	6.25 A (-25°C ... 55°C)
Derating	55 °C ... 70 °C (2.5%/K)
Control deviation	< 1 % (change in load, static 10 % ... 90 %) < 2 % (change in load, dynamic 10 % ... 90 %) < 0.1 % (change in input voltage ±10 %)
Rise time	< 0.5 s (U_{OUT} (10 % ... 90 %))
Residual ripple	< 40 mV_{PP} (with nominal values)
Connection in parallel	yes, with redundancy module
Connection in series	No
Protection against surge voltage on the output	≤ 35 V DC
Resistance to reverse feed	< 35 V DC

Output connection data	
Connection method	Screw connection
Conductor cross section, solid	0.2 mm^2 ... 2.5 mm^2
Conductor cross section, stranded	0.2 mm^2 ... 2.5 mm^2
Conductor cross section AWG/kcmil	24 ... 14
Stripping length	8 mm
Screw thread	M3
Tightening torque	0.5 Nm ... 0.6 Nm

Power consumption

Efficiency	> 94 % (for 230 V AC and nominal values)
Maximum power dissipation NO-Load	< 1.2 W
Power loss nominal load max.	< 9.7 W

General data

Insulation voltage input/output	4 kV AC (type test) 3 kV AC (routine test)
MTBF (IEC 61709, SN 29500)	> 868000 h (40°C)
Housing material	Polycarbonate
Foot latch material	Plastic POM
Dimensions W/H/D	37 mm / 130 mm / 125 mm
Weight	0.5 kg

Security

Degree of protection	IP20
Protection class	II (in closed control cabinet)
SELV	EN 60950-1 (SELV) and EN 60204 (PELV)

Ambient conditions

Ambient temperature (operation)	-25 °C ... 70 °C (> 55 °C Derating: 2,5 %/K)
Ambient temperature (start-up type tested)	-40 °C
Ambient temperature (storage/transport)	-40 °C ... 85 °C
Max. permissible relative humidity (operation)	≤ 95 % (at 25 °C, non-condensing)
Vibration (operation)	< 15 Hz, amplitude ±2.5 mm (according to IEC 60068-2-6) 15 Hz ... 150 Hz, 2.3g, 90 min.
Shock	30g in each direction, according to IEC 60068-2-27
Pollution degree	2
Climatic class	3K3 (in acc. with EN 60721)
Inflammability class in acc. with UL 94 (housing)	V0

Standards

Electrical Equipment for Machinery	EN 60204-1
Safety transformers for power supply units	EN 61558-2-16
Electrical safety (of information technology equipment - Safety - Part 1)	EN 60950-1/VDE 0805 (SELV)
Electronic equipment for use in electrical power installations	EN 50178/VDE 0160 (PELV)
SELV	EN 60950-1 (SELV) and EN 60204 (PELV)
Safe isolation	DIN VDE 0100-410
Limitation of mains harmonic currents	EN 61000-3-2
Network version/undervoltage	EN 61000-4-11
Information technology equipment - Safety (CB Scheme)	CB Scheme

Approvals

UL approvals	UL Listed UL 508 UL/C-UL Recognized UL 60950

Current approvals/permissions for the product can be found in the download area under phoenixcontact.net/products.

Conformance with EMC Directive 2004/108/EC		
Noise immunity according to EN 61000-6-2		
	EN 61000-6-2 requirement	**Tested**
Electrostatic discharge EN 61000-4-2		
Housing contact discharge	4 kV (Test intensity 2)	6 kV (Test intensity 3)
Housing air discharge	8 kV (Test intensity 3)	8 kV (Test intensity 3)
Comments	Criterion B	Criterion B
Electromagnetic HF field EN 61000-4-3		
Frequency range	80 MHz ... 1 GHz	80 MHz ... 1 GHz
Test field strength	10 V/m (Test intensity 3)	10 V/m (Test intensity 3)
Frequency range	1.4 GHz ... 2 GHz	1 GHz ... 2 GHz
Test field strength	3 V/m (Test intensity 2)	10 V/m (Test intensity 3)
Frequency range	2 GHz ... 2.7 GHz	2 GHz ... 3 GHz
Test field strength	1 V/m (Test intensity 1)	10 V/m (Test intensity 3)
Comments	Criterion A	Criterion A
Fast transients (burst) EN 61000-4-4		
Input	2 kV (Test intensity 3 - asymmetrical)	4 kV (Test intensity 4 - asymmetrical)
Output	2 kV (Test intensity 3 - asymmetrical)	2 kV (Test intensity 3 - asymmetrical)
Comments	Criterion B	Criterion A
Surge current loads (surge) EN 61000-4-5		
Input	1 kV (Test intensity 2 - symmetrical) 2 kV (Test intensity 3 - asymmetrical)	2 kV (Test intensity 3 - symmetrical) 4 kV (Test intensity 4 - asymmetrical)
Output	0.5 kV (Test intensity 1 - symmetrical) 0.5 kV (Test intensity 1 - asymmetrical)	1 kV (Test intensity 2 - symmetrical) 2 kV (Test intensity 3 - asymmetrical)
Comments	Criterion B	Criterion A
Conducted interference EN 61000-4-6		
Input/output	asymmetrical	asymmetrical
Frequency range	0.15 MHz ... 80 MHz	0.15 MHz ... 80 MHz
Voltage	10 V (Test intensity 3)	10 V (Test intensity 3)
Comments	Criterion A	Criterion A

Key	
Criterion A	Normal operating behavior within the specified limits.
Criterion B	Temporary impairment to operational behavior that is corrected by the device itself.

Emitted interference in acc. with EN 61000-6-3	
Radio interference voltage in acc. with EN 55011	EN 55011 (EN 55022) Class B, area of application: Industry and residential
Emitted radio interference in acc. with EN 55011	EN 55011 (EN 55022) Class B, area of application: Industry and residential

All technical specifications are nominal values and refer to a room temperature of 25 °C and 70 % relative humidity at 100 m above sea level.

5 Intended use

This power supply unit features IP20 protection and is intended for installation in housing. It is suitable for use in industrial applications.

6 Structure

6.1 Device elements

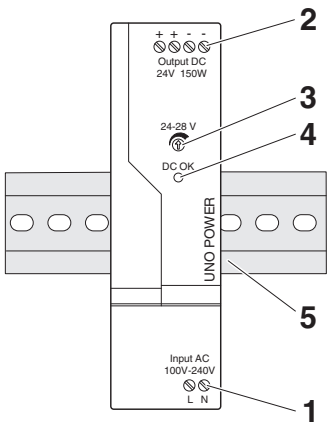

Figure 1 Device elements

1. Input voltage: Input AC L/N
2. Output voltage: Output DC+/-
3. Potentiometer, 24 V DC ... 28 V DC
4. Green LED: DC OK
5. Universal snap-on foot: 35 mm DIN rail according to EN 60715

6.2 Block diagram

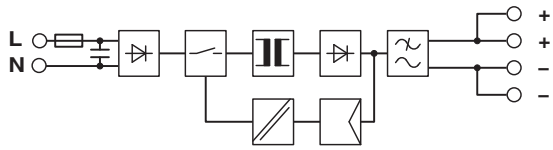

Figure 2 Block diagram

Element	Meaning
	Fuse
	Rectifier
	Switch
	Transformer
	Filter
	Electrically isolated signal transmission
	Regulation

7 Assembly

7.1 Unpacking

Before mounting the power supply unit, it must be checked for damage:

- Take the device out of its packaging.
- Check the device for any damage sustained during transport.
- Retain the package slip for future use.
- Dispose of packaging in an environmentally-friendly way.

7.2 Mounting the power supply unit

The power supply unit is intended for installation in a distributor box or control cabinet.

The power supply unit is designed for convection cooling. Maintain a minimum distance from other devices in order to ensure convection cooling.

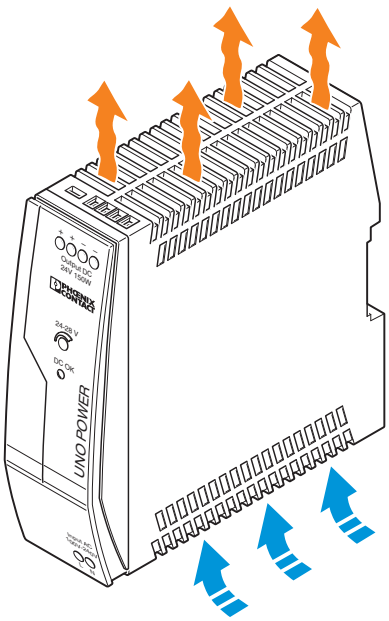

Figure 3 Convection

Please note the following before mounting the power supply unit:

- The minimum distance from other devices that must be observed in order to ensure convection cooling is: 30 mm vertically, 0 mm horizontally

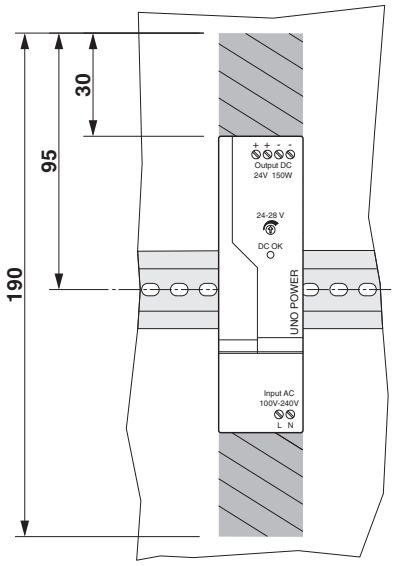

Figure 4 Locked areas

– The device dimensions

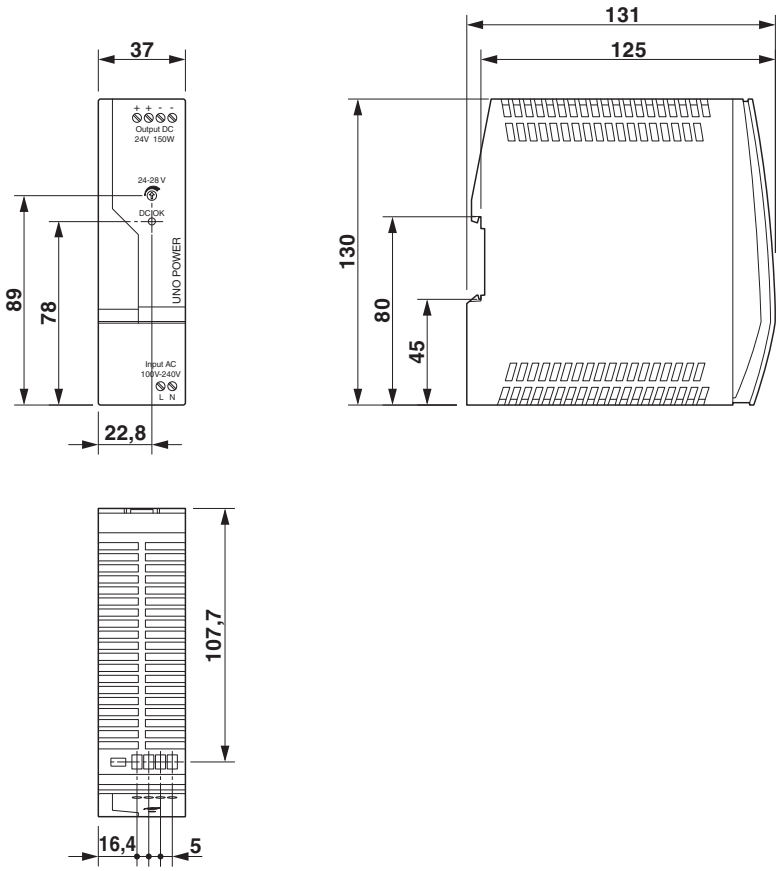

Figure 5 Device dimensions

7.3 Mounting on a DIN rail

The power supply unit can be installed on all 35 mm DIN rails according to EN 60715.

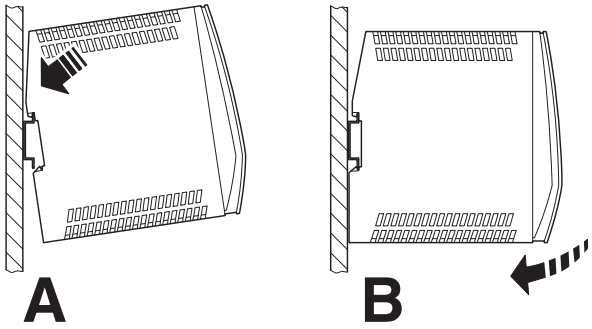

Figure 6 Mounting on a DIN rail

7.4 Normal mounting position

When installed, the input terminal blocks must be at the bottom and the output terminal blocks at the top.

If the power supply unit is installed in a mounting position other than the normal mounting position, the output power must be reduced.

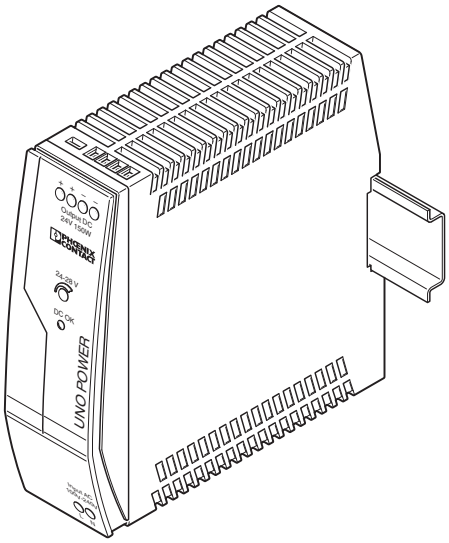

Figure 7 Normal mounting position

8 Installing the power supply unit

8.1 Safety regulations and installation notes

WARNING: risk of electric shock!

Only professionals may install, start up, and operate the device. Observe the national safety and accident prevention regulations.

Prior to installation, disconnect the input voltage and make sure that it cannot be switched on again unintentionally.

Mains connection must be performed by specialist personnel and protection against electric shock ensured.

Make sure that the device can be switched off outside the power supply according to the regulations in EN 60950 (e.g., by line protection on the primary side).

Cover termination area after installation in order to avoid accidental contact with live parts (e.g., by installing in a control cabinet).

Protect the device against ingress by foreign bodies, e.g., paper clips or metal parts.

WARNING: risk of electric shock!

Make sure that all supply lines are sufficiently dimensioned and have sufficient fuse protection.

Make sure that all output cables are dimensioned accordingly for the maximum device output current or have separate fuse protection.

WARNING: risk of electric shock!

Never open or repair the device yourself.

Internal fuses will only blow in the event of device malfunction. Do not modify or attempt to repair the device. Send the device to the factory for examination.

8.2 Mains connection

The device can be connected to single-phase AC or three-phase power grids (TN-S, TN-C, TT, and IT) while considering the nominal input voltage.

For operation on two of the phase conductors of a three-phase system, an isolating facility for all poles must be provided.

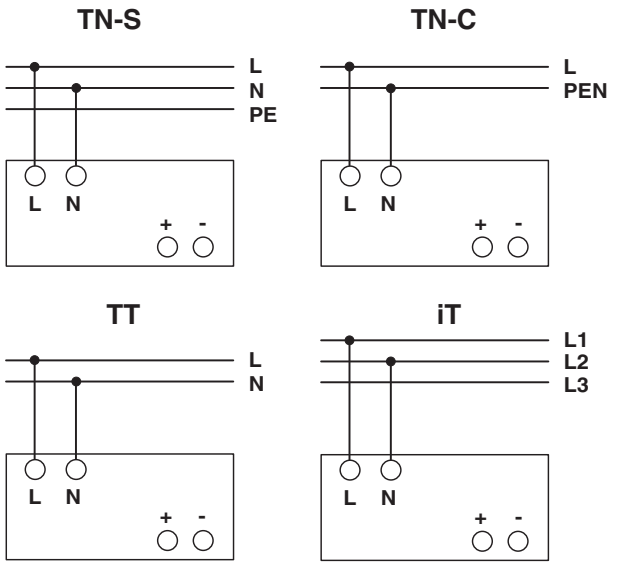

Figure 8 Network types

8.3 Device connections

Screw connection for input AC L/N

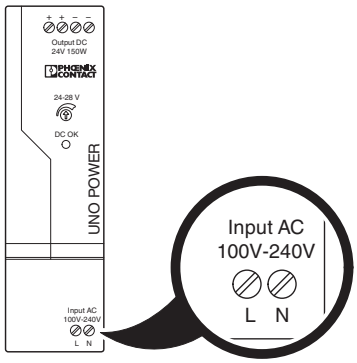

Figure 9 Screw connection for input AC L/N

Screw connection for output DC +/-

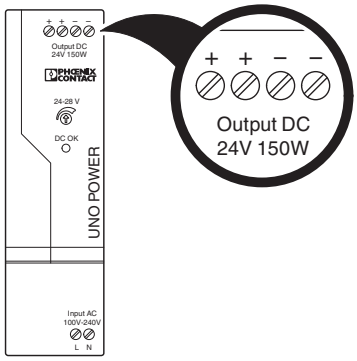

Figure 10 Screw connection for output DC +/-

8.4 Connecting cables

Use copper cables with an operating temperature > 75°C (ambient temperature < 55°C) and > 90°C (ambient temperature < 75°C).

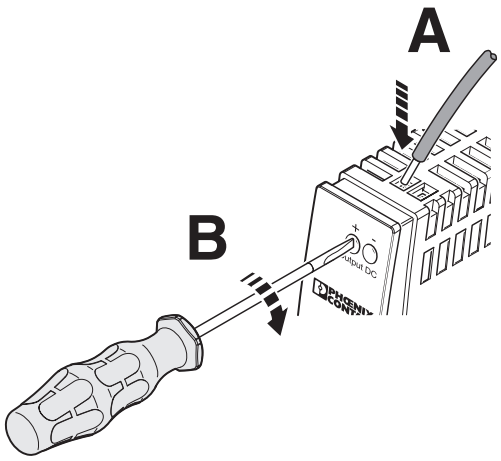

Figure 11 Connecting cables

1. Connect the supply lines to the input AC L/N connection terminal blocks.
2. Connect the output cables to the output DC +/- connection terminal blocks.

The power supply unit is operational as soon as the input terminal blocks are supplied with voltage.

9 Operating behavior of the power supply unit

9.1 Normal operation

In normal operation, the loads are supplied with a constant output voltage of 24 V DC.

9.2 Overload response

The power supply operates according to the characteristic curve shown in the figure. In the event of an overload ($I > I_N$), the device reduces the output voltage. If the output voltage drops below U_N x 0.8, the output current is also reduced. In the event of a higher overload, the power supply constantly limits the output current to I_N x 0.5. If the overload is rectified, the device continues running in nominal operation.

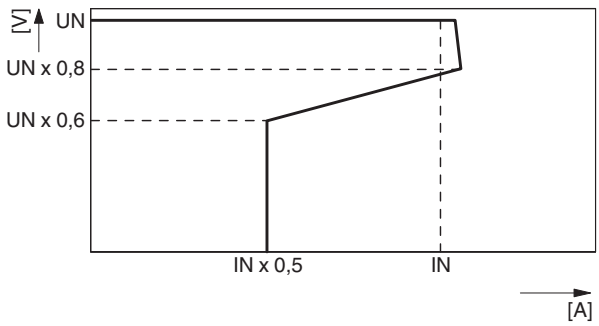

Figure 12 Output characteristic curve

9.3 Behavior at ambient temperatures > 55°C

At an ambient temperature of up to 55 °C, the power supply unit supplies the nominal output current. At ambient temperatures upwards of 55 °C, the output power must be reduced by 2.5 % per Kelvin temperature increase (temperature-dependent derating).

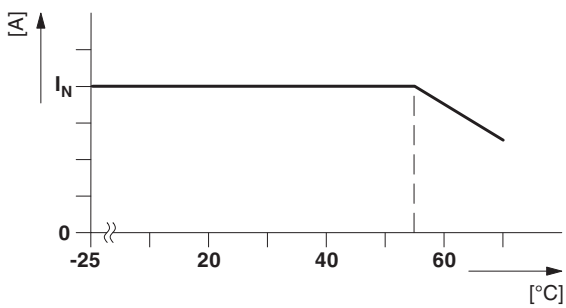

Figure 13 Temperature-dependent derating

9.4 Behavior in the case of alternative mounting positions

For mounting positions that differ from the normal mounting position, the output power must be reduced (position-dependent derating).

The characteristic curve can be used to determine the maximum output power to be drawn for each ambient temperature for different mounting positions.

Normal mounting position

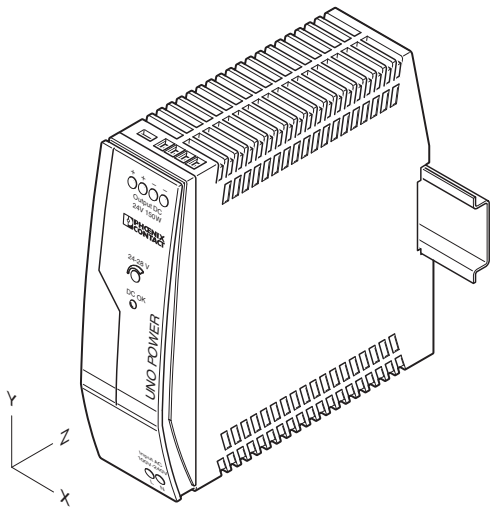

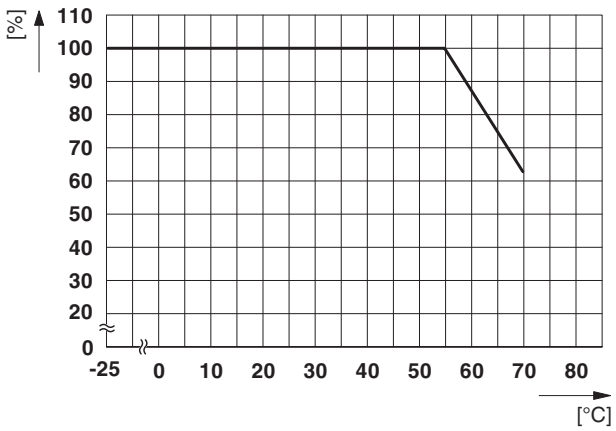

Rotated mounting position 90° X-axis

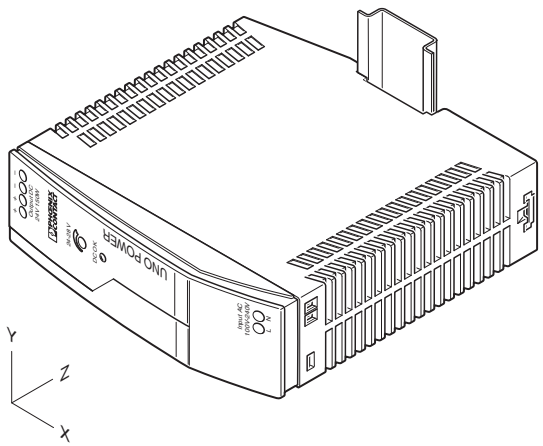

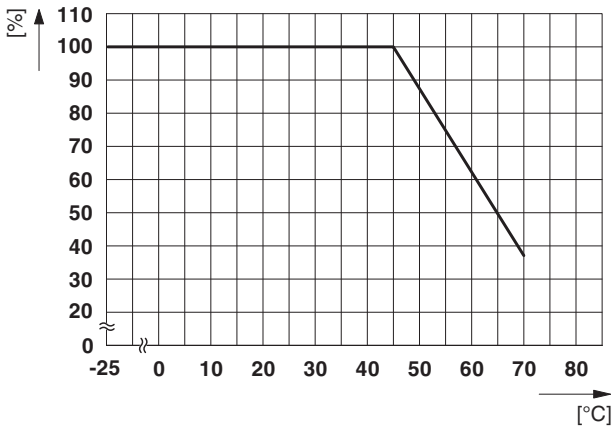

Rotated mounting position 180° X-axis

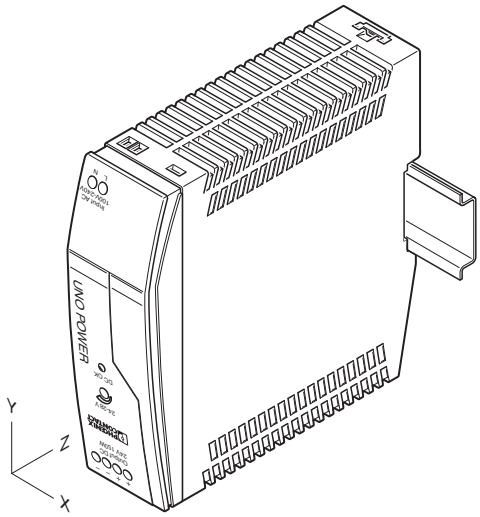

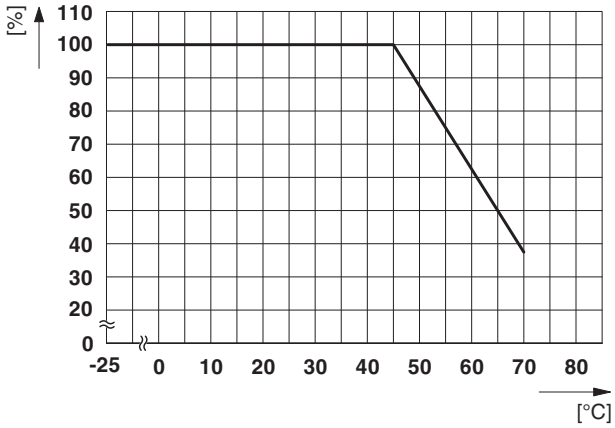

Rotated mounting position 270° X-axis

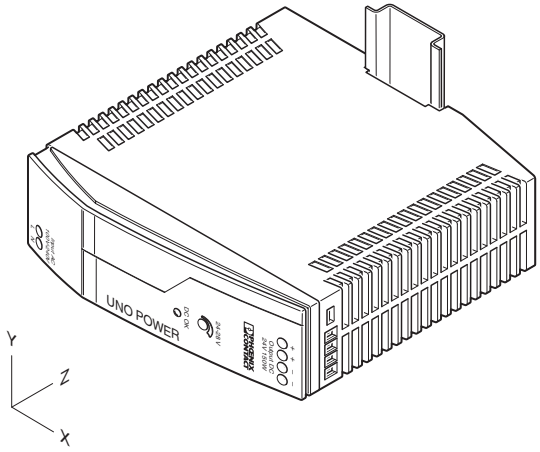

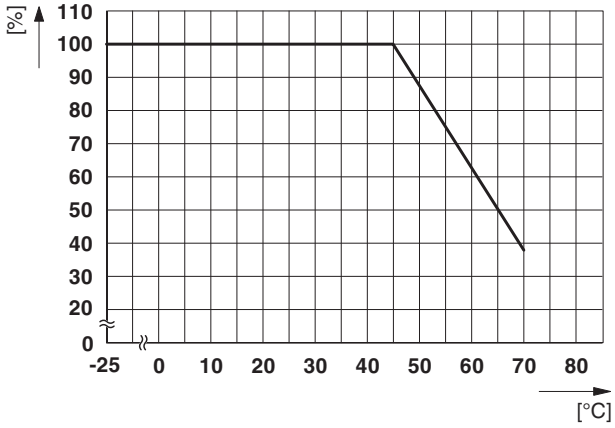

Rotated mounting position 90° Z-axis

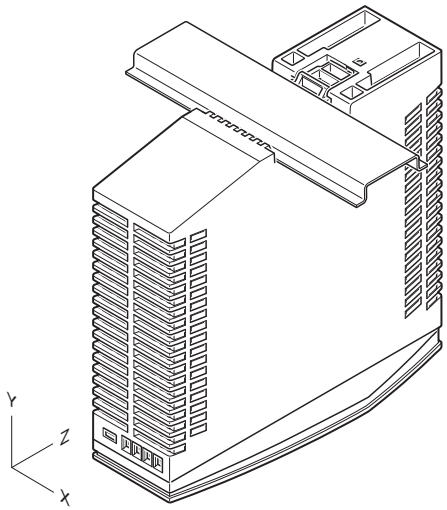

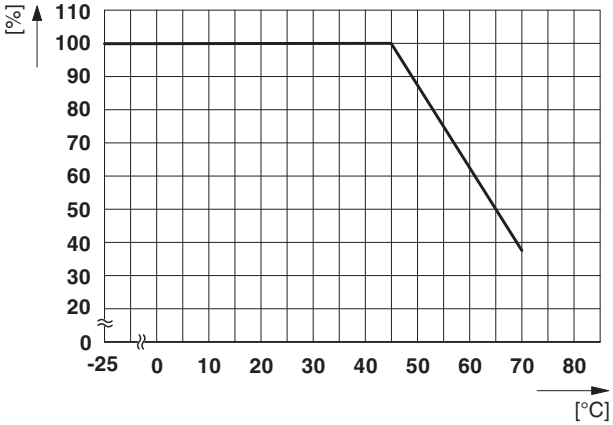

Rotated mounting position 270° Z-axis

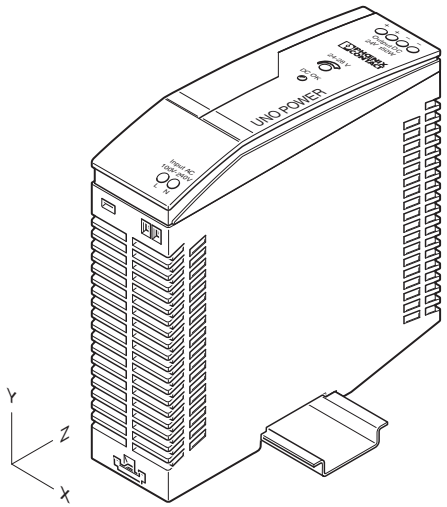

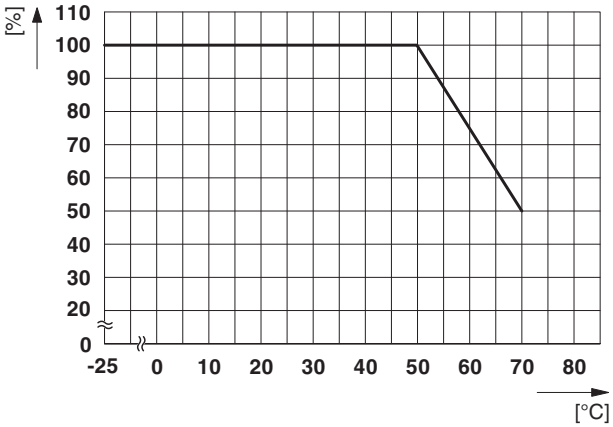

10 Operating the power supply unit

10.1 Function monitoring

DC OK LED

The DC OK LED is available for visual function monitoring of the power supply unit.

Status 1	Status 2	
DC OK LED	lit	OFF
Meaning	Output voltage > 21.5 V	Output voltage < 21.5 V DC, overload mode or no mains voltage
State description	The device is operating, output voltage and output current are OK	The device is in operation, but there is a fault on the side of the consumer; the current consumption is greater than IN or the output is short-circuited. The device is out of operation because there is no mains voltage, the fuse on the primary side has been triggered, or the device is faulty.
Corrective		Remove the error at the load, use a more powerful power supply unit, connect a power supply unit of the same type parallel to the existing device, remove the short circuit, apply mains voltage, enable the fuse again or replace the power supply unit.

10.2 Operating power supply units in parallel

Power supply units of the same type can be connected in parallel to increase both redundancy and power.

> To ensure symmetrical current distribution, all cable connections from the power supply unit to the busbar must be the same length and have the same conductor cross section.

Redundant operation

Redundant circuits are suitable for supplying systems which place particularly high demands on operational safety. If a fault occurs in the primary circuit of the first power supply unit, the second device automatically takes over the complete power supply without interruption, and vice versa.

Using a redundancy module, it is possible for two power supply units of the same type that are connected in parallel on the output side for redundancy to be decoupled from one another.

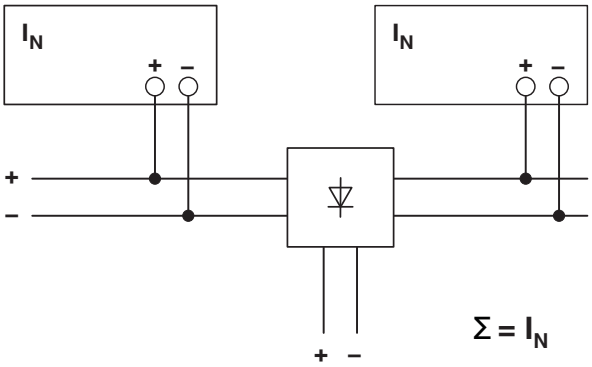

Figure 14 Redundant circuit with redundancy module

Increased performance

Power supply units of the same type can be connected in parallel to increase the power to n x I_N. Parallel connection is recommended if existing systems are to be extended and the power supply unit that is installed here does not cover the current consumption of the most powerful load. Otherwise, the loads should be distributed between individual devices that are independent of one another.

Using a redundancy module, it is possible for two power supply units of the same type that are connected in parallel on the output side to increase power to be decoupled from one another.

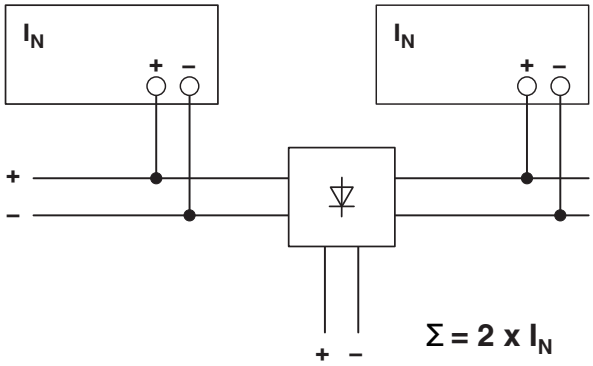

Figure 15 Parallel connection to increase power with a redundancy module

11 Removal

11.1 Removing the power supply unit

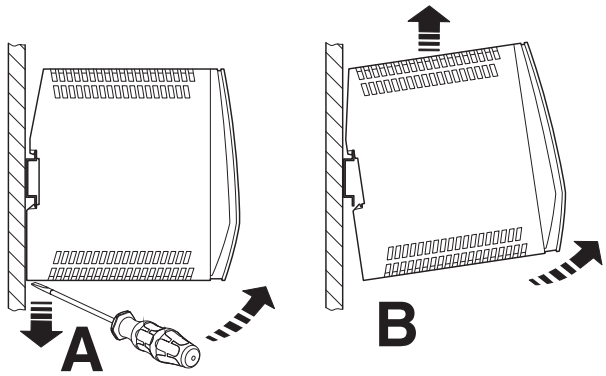

Figure 16 Removal

11.2 Notes on disposal

Do not dispose of the power supply unit with household waste. It should be disposed of in accordance with the currently applicable national regulations.

MODEL #: HNF362R

Heavy Duty Safety Switches

Features

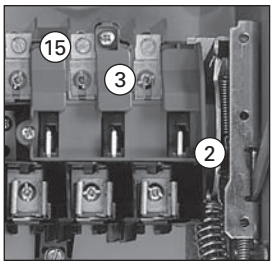

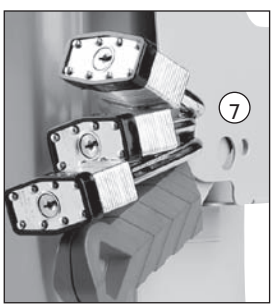

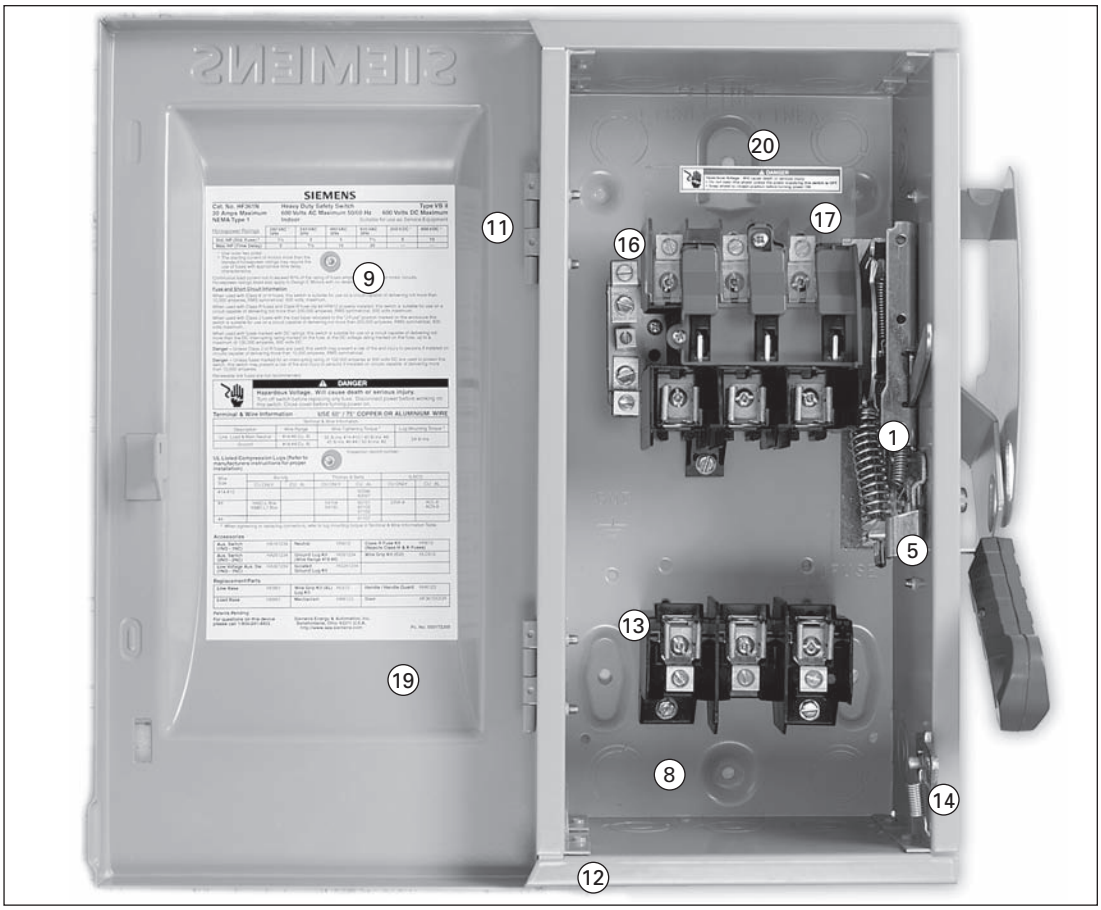

1. Quick-make, quick-break operating mechanism that ensures positive operation.
2. Visible blade, double-break switching action.
3. Arc chutes dissipate heat and prolong switch life.
4. Highly visible red handle grip. Designed for hook stick operation.
5. Defeatable dual cover interlock.
6. Center punch provided for field drilling to allow ON padlocking.
7. Handle can be padlocked in the OFF position with up to (3) padlocks with 5/16" hasps.
8. Generous top, bottom and side gutters that meet or exceed NEC wire-bending space requirements.
9. Informative door labeling which includes replacement parts list.
10. Tangential knockouts through 600A for easy conduit lineup.
11. Side-hinged door that opens past 180 degrees for easier wiring.
12. Unique enclosure design increases rigidity and prevents cuts and scrapes to conductors and installer's hands.
13. Spring reinforced fuse clips that assure reliable contact for cool operation.
14. Door latch securely holds door closed and allows cover padlocking.
15. Front removable mechanical lugs that are suitable for CU/Al 60 or 75° C conductors.
16. Lugs are field convertible to copper body and to a wide variety of compression connectors.
17. Hinged clear line terminal shield with probe holes for inspecting or testing line side terminals.
18. Embossed aluminum nameplate on Heavy Duty Switches provides highly visible ON/OFF indication.
19. Drawn cover for increased rigidity and resistance to abuse.
20. Top key hole and bottom mounting holes provide easy 2 or 3 point mounting.

MODEL #: HNF362R

Heavy Duty Safety Switches

600 Volt Non-Fusible④

2-Pole③ — 480 Volt AC / 600 Volt AC / 600 Volt DC

System	Ampere Rating	Indoor - Type 1 Catalog Number	Indoor - Type 1 Ship. Wt. (lbs.)	Outdoor - Type 3R Catalog Number	Outdoor - Type 3R Ship. Wt. (lbs.)	Horsepower Ratings 240 Volt 1-Phase	240 Volt 3-Phase	480 Volt 1-Phase	480 Volt 3-Phase	600 Volt 1-Phase	600 Volt 3-Phase	250V DC	600V DC
	30	HNF261	12	HNF261R	13	—	—	7 1/2	—	10	—	5	15
	60	HNF262	19	HNF262R	20	—	—	20	—	25	—	10	30
	100	HNF263	24	HNF263R	25	—	—	30	—	40	—	20	50
	400	HNF265■	109	HNF265R	113	15	—	50	—	50	—	40	50
	600	HNF266■	111	HNF266R■	115	15	—	50	—	50	—	50	50

3-Pole — 480 Volt AC / 600 Volt AC / 250 Volt DC

	30	HNF361	12	HNF361R	13	5	10	7 1/2	20	10	30	5	—
	30	—	—	HNF361RL⑥	19	5	10	7 1/2	20	10	30	5	—
	60	HNF362H②	11	HNF362RH②	11	10	20	20	50	20	40	10	—
	60	HNF362①	19	HNF362R①	19	10	20	20	50	25	60	10	30⑦
	60	—	—	HNF362RL⑥	24	10	20	20	50	25	60	10	30⑦
	100	HNF363①	23	HNF363R①	24	15	40	30	75	40	100	20	50⑦
	200	HNF364①	46	HNF364R①	47	15	60	50	125	50	150	40	50
	400	HNF365	114	HNF365R	118	15	125	50	250	50	350	50	—
	600	HNF366	116	HNF366R	120	15	200	50	400	50	500	50	—
	800	HNF367	295	HNF367R	295	15	250	50	500	50	500	50	—
	1200	HNF368	305	HNF368R	307	15	250	50	500	50	500	50	—

600 Volt Non-Fusible④

2-Pole③ — 480 Volt AC / 600 Volt AC / 600 Volt DC

		Type 4 / 4X Stainless⑧		Type 12 Industrial⑤									
	30	HNF261S	13	HNF261J	13	—	—	7 1/2	—	10	—	5	15
	60	HNF262S	20	HNF262J	20	—	—	20	—	25	—	10	30
	100	HNF263S■	25	HNF263J■	25	—	—	30	—	40	—	20	50
	400	HNF265S■	113	HNF265J■	114	15	—	50	—	—	—	40	50
	600	HNF266S■	115	HNF266J■	120	15	—	50	—	—	—	50	50

3-Pole — 480 Volt AC / 600 Volt AC / 250 Volt DC

	30	HNF361S	13	HNF361J	13	5	10	7 1/2	20	10	30	5	—
	60	HNF362SH②	15	HNF362JH②	14	10	20	20	50	20	40	10	—
	60	HNF362S①	19	HNF362J①	19	10	20	20	50	25	60	10	30⑦
	100	HNF363S①	24	HNF363J①	24	15	40	30	75	40	100	20	50⑦
	200	HNF364S①	47	HNF364J①	47	15	60	50	125	50	150	40	50
	400	HNF365S	118	HNF365J	119	15	125	50	250	50	350	50	—
	600	HNF366S	120	HNF366J	120	15	200	50	400	50	500	50	—
	800	HNF367S	295	HNF367J■	295	15	250	50	500	50	500	50	—
	1200	HNF368S■	310	HNF368J■	310	15	250	50	500	50	500	50	—

■ Built to order. Allow 2–3 weeks for delivery.
① Also rated 600V DC.
② Compact switch (11.1"H, 6.6"W box less cover and handle). Short circuit withstand rating—100,000 RMS sym. amps.
③ Use 3-Pole switch for 200A application.
④ Suitable for use as service entrance equipment except for 1200 when used on a 480 or 600V grounded wye system.
⑤ Also rated type 3S / 3R.
⑥ Indicates oversized enclosure (30A switch in a 60A enclosure or a 60A switch in a 100A enclosure.
⑦ 600V DC and 600V DC horsepower rating shown requires (2) poles to be connected in series.
⑧ 304 grade stainless steel. For switches with enclosures constructed from 316 grade stainless steel, see page 4-16.

Distributor Stock Panelboards

Same Day Availability

MODEL #: P1E18MC250C

Type P1 Panelboards

Convertible Mains – 1 Ø 3 Wire — 120/240V

Interiors Only – Less Branch Breakers			Boxes			Fronts	
Amp Rating Mains	**Max No. of Poles**	**Interiors**	**Height (in.)**	**Type 1**	**Type 3R/12**	**Surface**	**Flush**
250	18	P1A18MC250A	32	B32	WP32	S32B	F32B
	30	P1A30MC250A	38	B38	WP38	S38B	F38B
	42	P1A42MC250A	44	B44	WP44	S44B	F44B
400	18	P1A18MC400A	56	B56	WP56	S56B	F56B
	30	P1A30MC400A	62	B62	WP62	S62B	F62B
	42	P1A42MC400A	68	B68	WP68	S68B	F68B
250	18	P1A18MC250C	32	B32	WP32	S32B	F32B
	30	P1A30MC250C	38	B38	WP38	S38B	F38B
	42	P1A42MC250C	44	B44	WP44	S44B	F44B
400	18	P1A18MC400C	56	B56	WP56	S56B	F56B
	30	P1A30MC400C	62	B62	WP62	S62B	F62B
	42	P1A42MC400C	68	B68	WP68	S68B	F68B

Convertible Mains – 3 Ø 4 Wire — 208Y/120V

250	18	P1X18MC250A	32	B32	WP32	S32B	F32B
	30	P1X30MC250A	38	B38	WP38	S38B	F38B
	42	P1X42MC250A	44	B44	WP44	S44B	F44B
400	18	P1X18MC400A	56	B56	WP56	S56B	F56B
	30	P1X30MC400A	62	B62	WP62	S62B	F62B
	42	P1X42MC400A	68	B68	WP68	S68B	F68B
250	18	P1X18MC250C	32	B32	WP32	S32B	F32B
	30	P1X30MC250C	38	B38	WP38	S38B	F38B
	42	P1X42MC250C	44	B44	WP44	S44B	F44B
400	18	P1X18MC400C	56	B56	WP56	S56B	F56B
	30	P1X30MC400C	62	B62	WP62	S62B	F62B
	42	P1X42MC400C	68	B68	WP68	S68B	F68B

Convertible Mains – 3 Ø 4 Wire — 480Y/277V

250	18	P1E18MC250A	32	B32	WP32	S32B	F32B
	30	P1E30MC250A	38	B38	WP38	S38B	F38B
	42	P1E42MC250A	44	B44	WP44	S44B	F44B
400	18	P1E18MC400A	56	B56	WP56	S56B	F56B
	30	P1E30MC400A	62	B62	WP62	S62B	F62B
	42	P1E42MC400A	68	B68	WP68	S68B	F68B
250	18	P1E18MC250C	32	B32	WP32	S32B	F32B
	30	P1E30MC250C	38	B38	WP38	S38B	F38B
	42	P1E42MC250C	44	B44	WP44	S44B	F44B
400	18	P1E18MC400C	56	B56	WP56	S56B	F56B
	30	P1E30MC400C	62	B62	WP62	S62B	F62B
	42	P1E42MC400C	68	B68	WP68	S68B	F68B

MODEL #: P1E18MC250C

P1 Feature Overview

Key Panelboard Features
Lighting and Appliance Applications
Power Panelboard Applications
Convertible From Top Feed to Bottom Feed and Vice Versa
Change From Main Lug to Main Breaker or Add Sub-Feed Without
Changing Enclosure Size
Space-Saving, Horizontally Mounted Main Breaker Through 250 Amps
Short-Circuit Rating Label Giving Performance Level
Standard Aluminum Ground Bus
Blank End-Walls Standard
Bolted Current-Carrying Parts
Split Neutral
Connection Accessible From Front
Screw-Type Mechanical Lugs
Time-Reducing Wing Nuts to Secure Interior Without Tools
200 Ampere Rated Branch Breaker Connector
Main and Branch Devices Connected With Case-Hardened Hardware
Flush Lock, Concealed Door Hinges/Trim Screws
Symetrical Interior Mounting Studs to Eliminate
Upside-Down Mounting of Box
Jacking Screw Interior Adjustment
Shallow Depth
Optional Compression Lugs

Contents

Introduction to P1 Panelboards 1

General Specifications 3

Distributor Stock Panelboards 4 – 8

Factory-Assembled Panelboards 9 – 16

Dimensions and Weights 17

P1 Panelboards

The end product of an outstanding ancestry, the current family of panelboard designs represents the high level of engineering innovation expected from Siemens. Additional strength has been added to an already rugged and durable panelboard family. At the same time, many models have a trimmed exterior size, have added flexibility and are easier to install. These newer designs simplify wiring and reduce material requirements, saving additional installation time.

The lighting panel design still features the Fas-Latch trim that is so popular with installers, the jacking screw system that permits adjustments even after wiring has been installed, and other features such as exclusive split neutral. Many panelboards have the capability of mixing and matching breakers of different sizes and ratings, or changing from main lug to main breaker, or adding sub-feed breakers without changing box size.

The complete family of panelboards from Siemens employs numerous features – all industry-leading, many exclusive. Note the following, all found in the innovative P1 lighting panelboards:

- Symmetrical interiors – no top or bottom! To change from top to bottom (or vice versa), simply invert the interior. The deadfront labeling is always right-side up.
- First in the industry ratings of 125A/250A main lug and main breaker.
- Field convertible from main lug to main breaker and vice versa, with no increase in enclosure height.
- Field addability of feed-thru lugs or sub-feed circuit breaker without increasing enclosure size.
- Neutral system is field upgradeable to 200% capacity – another industry first.
- Three circuit sizes (18, 30, 42) mean only three box heights, regardless of main configuration through 250 amps and an additional (18, 30, 42) circuit version available at 400 amps.
- Suitable for use as service entrance given compliance with NEC.
- Bonding provisions are shipped with each panel.
- 240V and 480Y/277V versions utilize identical boxes and fronts.

Panelboard General Specifications

MODEL #: P1E18MC250C

Class CTL Panelboards
Class CTL panelboards incorporate physical features which, in conjunction with the physical size, configuration, or other means provided in Class CTL circuit breakers, are designed to prevent the installation of more overcurrent protective poles than that number for which the device is designed and rated, per UL 67.

Service Entrance Equipment
When a panelboard is used as service entrance equipment, it must be located near the point of entrance of building supply conductors. In a panel having main lugs only, the number of breakers or switches directly connected to the main bus must be limited to six.
In a panel having a main breaker or main switch, the number of circuits are not limited except as may be provided under other panelboard requirements, i.e., lighting and appliance branch circuit panelboards.

Also panels must include a connector for bonding and grounding neutral conductor.

Panelboard Code Data
42-Circuit Rule: NEC Paragraph 384-14 defines a lighting and appliance branch circuit panelboard as one having more than 10 percent of its overcurrent devices rated 30 amperes or less, for which neutral connectors are provided. NEC paragraph 384-15 states that not more than 42 overcurrent devices (other than those provided for in the mains) of a lighting and appliance branch-circuit panelboard shall be installed in any one cabinet. For the purpose of this article a two-pole circuit breaker shall be considered two overcurrent devices; a three-pole circuit breaker shall be considered three overcurrent devices. (NEC 384-14 and -15 do not apply to panelboards feeding and communication circuits. Panelboards for this application must be so marked.)

Integrated Equipment Short Circuit Rating
The term "Integrated Equipment Short Circuit Rating" refers to the application of series connected circuit breakers in combination that allows some breakers to have lower individual interrupting ratings than the available fault current. This is permitted as long as the series combination has been tested and certified by UL.

Standards
NEC: 1996
NEMA: PB1
UL: 67 and 50. Listed by Underwriter's Laboratories, Inc., under "Panelboards" File #E2269, and #E4016. Meets Federal Specification W-P-115c dated June 8, 1996, for Type 1, Class 1.

Feed-thru and sub-feed lugs may result in lower interrupt ratings if not protected by an upstream short circuit protection device.

Lighting and Distribution Panels – Type P1
- Interiors have the ability to physicially interchange two- and three-pole breakers with an equivalent number of one-pole breakers.
- Panels come standard with connectors suitable for connection to copper or aluminum cable.
- Panels are labeled as "suitable for use as service entrance equipment."
- Panel interiors have adjustment screws to provide easy alignment for flush mounted applications.
- The interior is provided with wing nuts for securing to box without tools.
- Removable end-walls are standard and available blank and with KO's.
- Panelboard box has a separate UL label and supplies wire bending and gutter requirements to meet the NEC and UL standards.
- Wiring gutters are completely free of any part of trim clamp to prevent damaging wire insulation.
- Deadfronts are provided with a flange for easy attachment of trim.
- Incoming cable lugs are grouped at one end to separate them from the load side cables.
- Individual circuit number button, as well as an embossed number next to each breaker or provision, are provided.
- The interior shall be provided with wing nuts for securing to box without tools.
- The panel trim may be surface or flush and is equipped with concealed hinges, flush lock and a holder for circuit directory card. Trims are fabricated from code gauge steel and finished ANSI 61.
- Trim shall have two separate supports designed to engage the box flange to stabilize and secure the trim during installation.
- Trim screws to be located behind the lockable door for tamper resistance.

Interior – Type P1
- Interiors may be completely factory-assembled.
- Sizing of conductor is in accordance with UL 67.
- Interiors permit installation of feed-thru lugs or a bus fed sub-feed circuit breaker, up to 250 amperes, without increasing the enclosure size.
- Interiors are convertible from main lug to main breaker with the addition of an appropriate field-installable kit.
- Interiors are changeable from top to bottom feed and vice versa, while maintaining readability of deadfront labeling.
- Main lugs up to 350 Kcmil are lay-in construction to facilitate connections.
- Neutral bussing is located adjacent to the breaker load terminals for easy wiring and shortest cable run possible.

Distributor Stock Panelboards

Same Day Availability

MODEL #: P1E18MC250C

Type P1 Panelboards

Breaker Mounting Kits
– Main or Sub-Feed w/o Breaker

Amp Rating	Breaker Frames	Service	Catalog No.
100	BL, BLH, HBL	1 Phase	MBKBL1
100	BQO	3 Phase	MBKBD3
225	QJ2, QJH2, QJ2-H	1 Phase	MBKQJ1
		3 Phase	MBKQJ3
125	ED2, ED4, ED6, HED4, HED6	1 Phase	MBKED1
		3 Phase	MBKED3
250	FXD6, FD6, HFD6	1 Phase	MBKFD1
		3 Phase	MBKFD3
400*	JD2, JD6, JXO6, HJO6, HJXO6	1 Phase	MBKJD1

* Main only

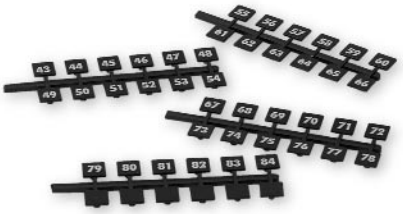

NBK4

Miscellaneous Accessories

Catalog No.	Description
NBK4	Number Strips 43-84
NBK5	Number Strips 85-126
NBK6	Number Strips 127-168
ECGK	Cu Ground Bus 44 Connections
IGK	Insulated Al Ground Bus
ICGK	Insulated Cu Ground Bus
EWK1	End-Wall Kit with Knockouts (20"W x 5.75"DP)
QF3	Filler Plate

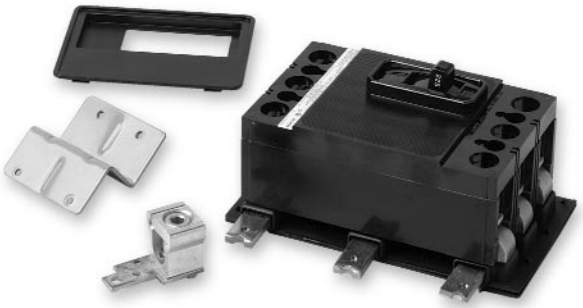

MBKQJ3

MBKFD3

MODEL #: P1E18MC250C

Factory-Assembled Panelboards

Catalog Numbering System

P1 Panelboard

Type of Panel
P1

Voltage and System
A = 120/240V 1 Phase 3 Wire
B = 240/120V 3 Phase 4 Wire
C = 208Y/120V 3 Phase 4 Wire
D = 240V 3 Phase 3 Wire
E = 480Y/277V 3 Phase 4 Wire
H = 120V 1 Phase 2 Wire
J = 240V 1 Phase 2 Wire
X = 208Y/120V 3 Phase 4 Wire (P1 un-assembled)
L = 600Y/347V 3 Phase 4 Wire
M = 380/220 3 Phase 4 Wire
N = 125V DC with 2-Pole Branch Devices
O = 250V DC with 2-Pole Branch Devices
P = 125/250V DC with 2- and 3-Pole Branch Devices
1 24Vdc 1-Pole Branch Devices
2 24Vdc 2-Pole Branch Devices
3 48Vdc 1-Pole Branch Devices
4 48Vdc 2-Pole Branch Devices
5 125Vdc1-Pole Branch Devices

Circuits or Enclosure Height
18, 30, 42

***Main Lug (ML), Main Breaker**
See Main Breaker Table coding below,
MC – Distributor Stock

P 1 E 18 MC 2 5 0 C T S

Amperage
100-400

Bus Material
A = Tin Plated Aluminum Temp Rated (Standard All Panels)
C = Copper Temp Rated (Optional) P1

Feed Location
T = Top
B = Bottom

Mounting
S = Surface
F = Flush

***(Breaker Type) Code**
(BL) BL, (BLH) LH, (HBL) HL, (BQD) BD, (ED4) E4, (ED6) E6, (HED4) H4, (QJ2) QJ, (QJH2) QH, (QJ2-H) Q2, (FXD6) FX, (HFD6) HF, (JD6) J6, (JXD6) JX, (HJD6) HJ

MODEL #: B32, S32B

Kits and Accessories

Type P2 Panelboards

Table P2-20 – Standard Enclosures

Box Height Inches	Catalog Number				
	Type 1 Standard Trim			Type 3R	Type 3R/12
	Box	Surface	Flush		
26	B26	S26B	F26B	NR26	WP26
32	B32	S32B	F32B	NR32	WP32
38	B38	S38B	F38B	NR38	WP38
44	B44	S44B	F44B	NR44	WP44
50	B50	S50B	F50B	NR50	WP50
56	B56	S56B	F56B	NR56	WP56
62	B62	S62B	F62B	NR62	WP62
68	B68	S68B	F68B	NR68	WP68
74	B74	S74B	F74B	NR74	WP74

Options For Type 1 Trims
Items must be ordered as manual line item on Spartanburg
Hinged trim – Replace "B" suffix with "H"
Door-in-door – Replace "B" suffix with "D"
Metal card holder – Replace "B" suffix with "M" on standard trim, add "M" suffix on optional trims

Option For 24" Wide Enclosures with Equal Gutter on Both Sides
24" wide with equal gutter on both sides - Add "24" as prefix

Table P2-21 – Breaker Kits and Accessories

Kit No.	Description	Contents
BBKB32	BL/BQD 6-pole 3" branch breaker kit	Kit contains top barrier, (3) A/C connectors, (1) B connector, hardware
BBKED32	ED 6-pole 3" branch breaker kit	Kit contains breaker support, inter-phase barriers, (3) A/C connectors, (1) B connector, hardware
BBKQ1	QJ branch breaker kit for 2 and 3-pole single mount	Kit to contain all connectors and cover plates necessary to mount both 2 and 3-pole breakers
DFK1	BL, BQD, ED deadfront kit for 1" pole breakers	Center strips 3", 6", 9," 15," 21" plus mounting hardware
DFFP3	Deadfront filler 3"	3" empty space filler and hardware
DFFP6	Deadfront filler 6"	6" empty space filler and hardware
BNK2	Branch neutral (P2)	Three tier lug with mounting hardware to increase neutral capacity
P2BK1	P2 250A max. Bonding Kit	Bonding strap and hardware
P2BK2	P2 400A max. Bonding Kit	Bonding strap and hardware
P2BK3	P2 600A max. Bonding Kit	Bonding strap and hardware

MODEL #: BQD215, BQD315, BQD360

BQD 100A Frame Panelboard Mounting Circuit Breakers

BQD-HACR Type

Continuous Current Rating @ 40°C	1-Pole 277V AC–125V DC Catalog Number	List Price $	2-Pole③ 480Y/277V AC–125/250V DC Catalog Number	List Price $	3-Pole③ 480Y/277V AC Catalog Number	List Price $
15	BQD115①②	92.00	BQD215	227.00	BQD315	402.00
20	BQD120①②	92.00	BQD220	227.00	BQD320	402.00
25	BQD125②	92.00	BQD225	227.00	BQD325	402.00
30	BQD130②	92.00	BQD230	227.00	BQD330	402.00
35	BQD135	92.00	BQD235	227.00	BQD335	402.00
40	BQD140	92.00	BQD240	227.00	BQD340	402.00
45	BQD145	92.00	BQD245	227.00	BQD345	402.00
50	BQD150	92.00	BQD250	227.00	BQD350	402.00
60	BQD160	92.00	BQD260	227.00	BQD360	402.00
70	BQD170	193.00	BQD270	461.00	BQD370	548.00
80	BQD180	193.00	BQD280	461.00	BQD380	548.00
90	BQD190	193.00	BQD290	461.00	BQD390	548.00
100	BQD1100	193.00	BQD2100	461.00	BQD3100	548.00

BQD6 CSA Certified

Continuous Current Rating @ 40°C	1-Pole 347V AC Catalog Number	List Price $	2-Pole③ 600/347V AC Catalog Number	List Price $	3-Pole③ 600/347V AC Catalog Number	List Price $
15	BQD6115	92.00	BQD6215	227.00	BQD6315	402.00
20	BQD6120	92.00	BQD6220	227.00	BQD6320	402.00
25	BQD6125	92.00	BQD6225	227.00	BQD6325	402.00
30	BQD6130	92.00	BQD6230	227.00	BQD6330	402.00
35	BQD6135	92.00	BQD6235	227.00	BQD6335	402.00
40	BQD6140	92.00	BQD6240	227.00	BQD6340	402.00
45	BQD6145	92.00	BQD6245	227.00	BQD6345	402.00
50	BQD6150	92.00	BQD6250	227.00	BQD6350	402.00
60	BQD6160	92.00	BQD6260	227.00	BQD6360	402.00
70	BQD6170	193.00	BQD6270	461.00	BQD6370	548.00
80	—	—	BQD6280	461.00	BQD6380	548.00
90	—	—	BQD6290	461.00	BQD6390	548.00
100	—	—	BQD62100	461.00	BQD63100	548.00

Interrupting Ratings

Breaker Type	Number of Poles	RMS Symmetrical Amperes (KA) Volts AC 120	240	277	480/277	347	600/347	Volts DC 125	250
BQD (UL)	1	65	—	14	—	—	—	14	—
	2	—	65	—	14	—	—	—	14
	3	—	65	—	14	—	—	—	—
BQD6 (CSA)	1	65	—	—	—	14	—	14	—
	2	—	65	—	—	—	14	—	14
	3	—	65	—	—	—	14	—	—

BQD, BQD6

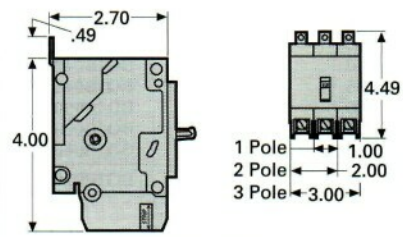

BQD, BQD6

Shipping Weights

Number of Poles	Number per Carton	Shipping Weight (lbs.) (ea.)
1	1/12/48	.6
2	1/6/24	1.2
3	1/4/16	2.0

Lugs For 60/70°C Wire

BQD – Load End Only	
15–40	#14–#6 AWG Cu #12–#6 AWG Al
45–100	#8–#1 AWG Cu #6–#1/0 AWG Al

For inches / millimeters conversion, see Application Data section.

①SWD rated for switching 277V AC fluorescent lighting.
②HID rated at 277V AC.
③Not suitable for 3 phase delta 480V applications.

Accessories pages 112-123

MODEL #: BQD215, BQD315, BQD360

Reference Guide

Thermal-Magnetic Trip Breakers

				Load Center Breakers						Panelboard Breakers			
				QT[1]	QP, QPP[2]	QPH, QPPH[2]	HQP, HQPP[2]	HQPPH[2]	QPJ[9]	BL	BLH	HBL	BQD, BQD6[1]
Page				53	50, 54	50, 54	50, 54	54	53	56	56	56	59
Ratings	AC	Poles		1, 2	1, 2, 3	1, 2, 3	1, 2, 3[7]	2	2,3	1, 2, 3,	1, 2, 3	1, 2, 3[7]	1, 2, 3
		Amperes, Continuous		15–50	15–125[3][4]	15–125[3][4]	15–125[7]	100–200	150–200	15–125[3]	15–125[3]	15–100[7]	15–100
		Volts (60 Hertz)	1-Pole	120/240	120/240	120/240	120/240	120/240	120/240	120/240	120/240	120/240	277
			2-Pole										
			3-Pole	—	240	240	240	240	240	240	240	240	480/277
		UL Interrupting Rating — Symmetrical RMS Amperes	120V	10,000	10,000	22,000	65,000	—	—	10,000	22,000	65,000	65,000
			240V	10,000	10,000	22,000	65,000	100,000	10,000	10,000	22,000	65,000	65,000
			277V	—	—	—	—	—	—	—	—	—	10,000[1]
			347V	—	—	—	—	—	—	—	—	—	14,000
			480/277V	—	—	—	—	—	—	—	—	—	10,000[1]
			600/347V	—	—	—	—	—	—	—	—	—	14,000
	DC	Volts — 2-Pole		—	—	—	—	—	—	—	—	—	250
		Interrupting Rating — DC Amperes		—	—	—	—	—	—	—	—	—	14,000[5]
Dimensions in inches		Height	15–50A	—	2.87	2.87	—	—	7.00	3.56	3.56	—	4.50
			15–30A	—	—	—	—	—	—	—	3.75	—	—
			15–60A	3.12	—	—	—	—	—	—	—	—	—
			55–125A	—	3.12	3.12	3.12	3.12	3.00[9]	3.75	—	3.75	4.50
		Width	1-Pole	1.00	1.00	1.00	1.00	—	—	1.00	1.00	1.00	1.00
			2-Pole	2.00[1]	2.00[2]	2.00[2]	2.00	4.00[2]	[9]	2.00	2.00	2.00	2.00
			3-Pole	2.00[1]	3.00	3.00	3.00	—	3.00[9]	3.00	3.00	3.00	3.00
		Depth		2.06	2.37	2.37	2.37	2.37	2.34	2.37	2.37	2.69	2.23
Overcurrent Devices		Thermal and Fixed Magnetic Trip		√	√	√	√	√	√	√	√	√	√
		Molded Case Switch		—	√[6]	—	—	—	—	—	—	—	—
Accessories & Modifications		Undervoltage Trip		—	—	—	—	—	—	—	—	—	√
		Shunt Trip		—	√[6]	√[6]	√[6]	√[8]	—	√	√	√	√
		Auxiliary Switch		—	—	—	—	√[8]	—	√	√	√	√
		Alarm Switch		—	—	—	—	—	—	—	—	—	√
Individual Enclosures		Type 1 — Indoor Surface		√	√	√	√	√	—	—	—	—	—
		Type 1 — Indoor, Flush		—	√	√	√	√	—	—	—	—	—
		Type 3R — Outdoor-Rainproof		—	√	√	√	√	—	—	—	—	—

QP, QPH, HQP

BL, BLH, HBL

BQD, BQD6

For inches / millimeters conversion, see page 583.

[1] BQD6 CSA cerified 10,000A @ 600Y/347V 15–70A only.
[2] Types QPP, QPPH, HQPP and HQPPH are special 2-pole configurations for load center mains. Amperage range = 125–225A, width = 4 in.
[3] Single pole breakers available in ratings 15–70A only.
[4] 125A, 2-pole 120/240V AC only.
[5] 14,000A IR at 277/480V AC only.
[6] Not applicable to types QPP and QPPH.
[7] Single pole circuit breakers available in ratings 15-70A only, 125A available as a 2-pole only.
[8] Not applicable to type HQPP and HQPPH.
[9] Fits only Siemens EQIII load centers. Breaker is 2 or 3 poles wide.

MODEL #: P1224L1125CU

PL Series 1-Phase Main Lug & Main Breaker Load Centers

1-phase, 3-wire SN, 120/240 Volts AC

Main Breaker/Convertible Load Centers①

Copper Bus⑦

12-70 Circuits / 100-225 Amperes

60/75°C Rated 22,000A IR②

Branch Circuits			Indoor Enclosure – NEMA Type 1		Outdoor Enclosure – NEMA Type 3R	
Amp Rating	No. of Spaces	No. of Circuits	Catalog Number	Enclosure Height (inches)③	Catalog Number	Enclosure Height (inches)④
100	12	24	P1224B1100CU	18	PW1224B1100CU	21
100	16	24	P1624B1100CU	21	PW1624B1100CU	23
100	20	20	P2020B1100CU	24	PW2020B1100CU	27
100	20	24	P2024B1100CU	24	—	—
100	24	24	P2424B1100CU	24	—	—
100	30	30	P3030B1100CU	30	—	—
100	30	40	—	—	PW3040B1100CU NEW!	35
125	30	30	P3030B1125CU	30	PW3040B1125CU NEW!	35
150	20	30	P2030B1150CU	24	—	—
150	20	30	—	—	PW2030B1150CU NEW!	27
150	30	30	P3030B1150CU	30	—	—
150	30	40	—	—	PW3040B1150CU NEW!	35
200	20	40	P2040B1200CU	30	PW2040B1200CU	27
200	30	40	P3040B1200CU	36	PW3040B1200CU	35
200	30	40	P3040B1200⑧	36	—	—
200	40	40	P4040B1200CU	36	PW4040B1200CU	38
200	40	40	P4040B1200⑧	36	—	—
200	54	70	P5470B1200CU NEW!	44	—	—
225	42	60	P4260B1225CU	39	PW4260B1225CU	42
225	54	70	P5470B1225CU	44	—	—

Single phase factory installed 22kA IR main circuit breaker offers 22/10kA IR series combination rating when using 10kA type QP, QT, QPF, QE, QN, and QAF/QAFC branch breakers.

Main Lug/Convertible Load Centers⑥

Copper Bus⑦

12-70 Circuits / 125-225 Amperes

60/75° Rated 100,000A IR

Branch Circuits			Indoor Enclosure - NEMA Type 1		Outdoor Enclosure - NEMA Type 3R	
Amp Rating	No. of Spaces	No. of Circuits	Catalog Number	Enclosure Height (inches)③	Catalog Number	Enclosure Height (inches)④
125	12	12	P1212L1125CU⑤	18	PW1212L1125CU⑤	21
125	12	24	P1224L1125CU⑤	18	PW1224L1125CU⑤	21
125	16	24	P1624L1125CU	21	PW1624L1125CU	23
125	20	20	P2020L1125CU	24	—	—
125	20	24	P2024L1125CU	24	—	—
125	24	40	P2440L1125CU	24	—	—
125	30	40	P3040L1125CU	30	PW3040L1125CU	35
125	40	40	P4040L1125CU	36	—	—
150	20	30	P2030L1150CU	24	PW2030L1150CU	27
200	12	24	P1224L1200CU	24	PW1224L1200CU⑤	23
200	20	40	P2040L1200CU	30	PW2040L1200CU	27
200	24	40	P2440L1200CU	30	—	—
200	30	30	P3030L1200CU	36	—	—
200	30	40	P3040L1200CU	36	PW3040L1200CU	35
200	30	40	P3040L1200⑧	36	—	—
200	30	54	P3054L1200CU	36	PW3054L1200CU	35
200	40	40	P4040L1200CU	36	PW4040L1200CU	38
200	40	40	P4040L1200⑧	36	—	—
225	12	24	—	—	PW1224L1225CU	23
225	42	60	P4260L1225CU	39	PW4260L1225CU	42
225	54	70	P5470L1225CU	44	—	—

① Suitable for use as service equipment.
② May be installed on higher rated systems when protected by a circuit breaker with a higher AIR rating.
③ Indoor enclosures are 14 1/4" wide by 3 7/8" deep.
④ Outdoor enclosures are 14 1/2" wide by 4 1/4" deep.
⑤ Suitable for use as service entrance equipment when not more than six main disconnecting means are provided. See article 230.71 of the NEC®.
⑥ 125A load centers will accept MBK100A and MBK125A. 150A load centers will accept MBK150A. 200A load centers will accept MBK200A and MBK150A. 225A load centers will accept MBK225A, MBK200A, MBK150A.
⑦ Copper bus load centers are recommended for those applications where the environment may be severe (i.e. far and coastal areas).
⑧ Includes all PL Series features with aluminum bussing.

MODEL #: Q115, Q230

• Revised • 03/06/13

Circuit Breakers

Type QP with INSTA-WIRE

Continuous Current Rating @ 40° C	Type QP① 10,000A IR Catalog Number	Type QPH 22,000A IR Catalog Number	Type HQP 65,000A IR Catalog Number
1-Pole Plug-In (120V AC)⑤			
10	Q110⑨	—	—
15	Q115③	Q115H③	Q115HH■③
20	Q120③	Q120H③	Q120HH■③
25	Q125	Q125H■	Q125HH■
30	Q130	Q130H	Q130HH■
35	Q135■	Q135H■	Q135HH■
40	Q140	Q140H	Q140HH■
45	Q145■	Q145H■	Q145HH■
50	Q150	Q150H	Q150HH■
60	Q160	Q160H■	Q160HH■
70	Q170	Q170H■	Q170HH■
2-Pole Plug-In (Common-Trip 120/240V AC)⑥			
10	Q210⑨	—	—
15	Q215	Q215H	Q215HH
20	Q220	Q220H	Q220HH
25	Q225	Q225H■	Q225HH■
30	Q230	Q230H	Q230HH
35	Q235	Q235H■	Q235HH■
40	Q240	Q240H	Q240HH■
45	Q245	Q245H■	Q245HH■
50	Q250	Q250H	Q250HH
60	Q260	Q260H	Q260HH
70	Q270	Q270H	Q270HH
80	Q280	Q280H■	Q280HH■
90	Q290	Q290H	Q290HH■
100	Q2100	Q2100H	Q2100HH
110	Q2110	Q2110H	Q2110HH■
125	Q2125	Q2125H	Q2125HH
2-Pole Plug-In (Common-Trip 240V AC)④⑥			
15	Q215R	—	—
20	Q220R	—	—
30	Q230R	—	—
40	Q240R	—	—
50	Q250R	—	—
60	Q260R	—	—
70	Q270R	—	—
100	Q2100R■	—	—
3-Pole Plug-In (Common-Trip 240V AC)⑦			
15	Q315	Q315H	Q315HH■
20	Q320	Q320H	Q320HH
25	Q325	Q325H■	Q325HH■
30	Q330	Q330H	Q330HH
35	Q335	Q335H■	Q335HH■
40	Q340	Q340H	Q340HH
45	Q345	Q345H■	Q345HH■
50	Q350	Q350H	Q350HH
60	Q360	Q360H	Q360HH
70	Q370	Q370H	Q370HH■
80	Q380	Q380H	Q380HH■
90	Q390	Q390H	Q390HH■
100	Q3100	Q3100H	Q3100HH

QP / QPH / HQP Internal Accessories

Control Voltage AC	Catalog Number	Field/Factory Installed
120V Shunt Trip	add suffix ...00S01■	Factory
24V Shunt Trip	add suffix ...00S07■	Factory
120V Auxiliary Switch	add suffix ...01■②	Factory

Modifications

Description	Catalog Number
400 Hz Calibration	add suffix ...Y⑧
Marine 50°C Ambient Calibration	add suffix ...M
Fungus Proofing	add suffix ...F

For external accessories please refer to page 1-42.

■ Built to order. Allow 2-3 weeks for delivery.

① UL Listed for use with 60/75° wire through 40 amps, UL listed for use with 75° wire only for 50 amps and above, HACR rated.
② 1A and 1B contacts.
③ UL Listed for frequent switching applications (SWD). 120V AC Fluorescent Lighting.
④ UL Listed for use on 3-phase grounded "B" systems — 10,000 for this application.
⑤ Shipped 12 per sleeve.
⑥ Shipped 6 per sleeve.
⑦ Shipped 4 per sleeve.
⑧ UL Listed 5 KA IR.
⑨ Type QP1, UL listed for 16 AWG conductors and multiple wires.

B

Common features

- Instant ejection of relay by plastic retaining clip
- Integral coil indication and protection circuit
- 35 mm rail (EN 60715) mounting

	EMR Electromechanical Relays	SSR Solid State Relays
6.2 mm wide • **EMR - DC, AC or AC/DC coil versions** • **SSR - DC or AC/DC input versions** • Screw and Screwless terminal options	**38.51/38.61** • **1 CO - 6 A/250 V AC** **Page 1**	**38.81/38.91** 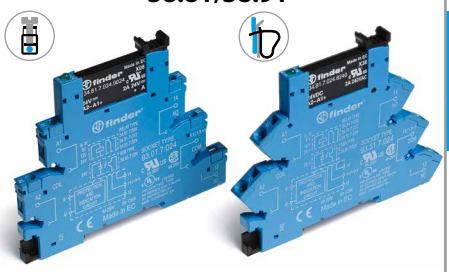 • Single solid state output: Options **0.1 A/48 V DC, 2 A/24 V DC, 2 A/240 V AC** • Silent, high speed switching • Long electrical life **Page 2**
6.2 mm wide • **Special coil/input leakage current suppression types** • **EMR - AC or AC/DC coil versions** • **SSR - AC or AC/DC input versions** • Screw and Screwless terminal options	**38.51.3... - 38.61.3...** 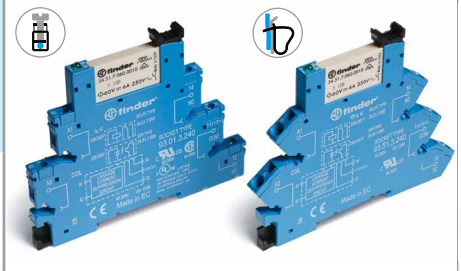 • **1 CO - 6 A/250 V AC** **Page 1**	**38.81.3... - 38.91.3...** 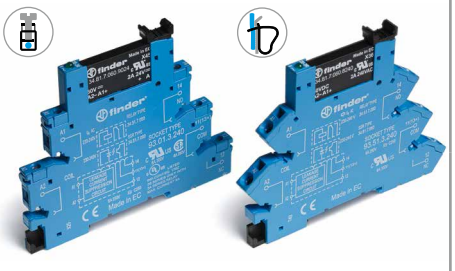 • Single solid state output: Options **0.1 A/48 V DC, 2 A/24 V DC, 2 A/240 V AC** • Silent, high speed switching • Long electrical life **Page 2**
6.2 mm wide • **Timed Interface module** • **4 functions & 4 time scales 0.1 s...6 h** • **EMR - AC/DC (12 or 24 V) supply versions** • **SSR - AC/DC (24 V) supply** • Screw terminals	**38.21** 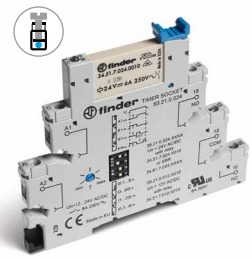 • **1 CO - 6 A/250 V AC** **Page 3**	**38.21...9024-8240** 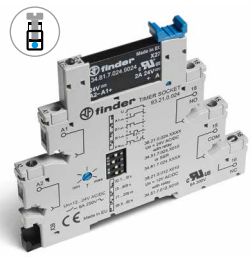 • Single solid state output: Options **2 A/24 V DC, 2 A/240 V AC** • Silent, high speed switching • Long electrical life **Page 3**
14 mm wide • **2 pole 8 A or 1 pole 16 A** • **EMR - DC or AC/DC coil versions** • **SSR - DC input versions** • Screw and Screwless terminal options	**38.01/38.52/38.11/38.62** 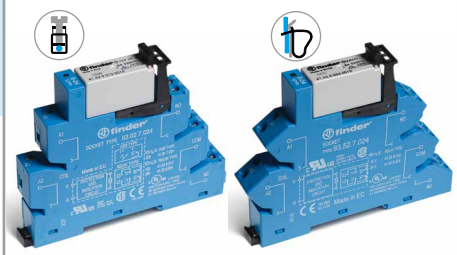 • **1 CO - 16 A/250 V AC** • **2 CO - 8 A/250 V AC** **Page 4**	**38.31/38.41** 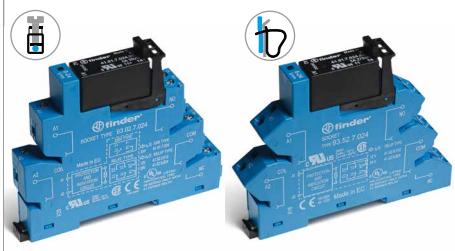 • Single solid state output: Options **5 A/24 V DC, 3 A/240 V AC** • Silent, high speed switching • Long electrical life **Page 5**

1 Pole - 6 A electromechanical relay interface modules, 6.2 mm wide.

Ideal interface for PLC and electronic systems

- Sensitive DC coil or AC/DC coil versions
- Integral coil indication and protection circuit
- Instant ejection of relay using plastic retaining clip
- UL Listing (certain relay/socket combinations)
- 35 mm rail (EN 60715) mounting

38.51/38.51.3
Screw terminal

38.61/38.61.3
Screwless terminal

	38.51/61	38.51.3/38.61.3	
	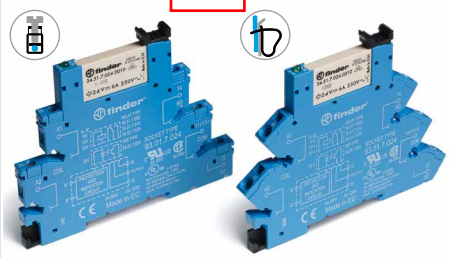	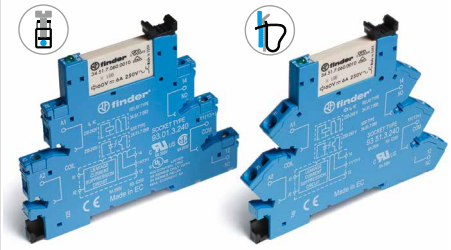	
	• 1 pole electromechanical relay • Screw terminal and screwless terminal • 35 mm rail (EN 60715) mounting	• Leakage current suppression • 1 pole electromechanical relay • Screw terminal and screwless terminal • 35 mm rail (EN 60715) mounting	
	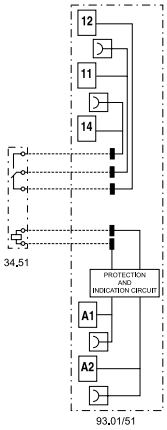	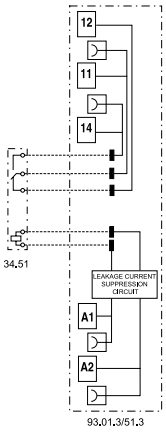	

* Special version for max ambient temperature +70 °C.

For outline drawing see page 12

Contact specification				
Contact configuration		1 CO (SPDT)	1 CO (SPDT)	
Rated current/ Maximum peak current	A	6/10	6/10	
Rated voltage/ Maximum switching voltage	V AC	250/400	250/400	
Rated load AC1	VA	1500	1500	
Rated load AC15 (230 V AC)	VA	300	300	
Single phase motor rating (230 V AC)	kW	0.185	0.185	
Breaking capacity DC1: 30/110/220 V	A	6/0.2/0.12	6/0.2/0.12	
Minimum switching load	mW (V/mA)	500 (12/10)	500 (12/10)	
Standard contact material		AgNi	AgNi	
Coil specification				
Nominal voltage (U_N)	V AC/DC	12 - 24 - 48 - 60 - (110…125) - (220…240)	(110…125)	—
	V AC	(230…240)*	—	(230…240)
	V DC	6 - 12 - 24 - 48 - 60 (non polarized)	—	—
Rated power AC/DC	VA (50 Hz)/W	See page 9	1/1	0.5/—
Operating range	AC/DC	(0.8…1.1)U_N	(94…138)V	—
	AC	(184…264)V	—	(184…264)V
	DC	(0.8…1.2)U_N	—	
Holding voltage	AC/DC	0.6 U_N / 0.6 U_N	0.6 U_N / 0.6 U_N	
Must drop-out voltage	AC/DC	0.1 U_N / 0.05 U_N	44 V	72 V
Technical data				
Mechanical life AC/DC	cycles	$10 \cdot 10^6$	$10 \cdot 10^6$	
Electrical life at rated load AC1	cycles	$60 \cdot 10^3$	$60 \cdot 10^3$	
Operate/release time	ms	5/6	5/6	
Insulation between coil and contacts (1.2/50 µs)	kV	6 (8 mm)	6 (8 mm)	
Dielectric strength between open contacts	V AC	1000	1000	
Ambient temperature range ($U_N \leq 60$ V/> 60 V)	°C	–40…+70/–40…+55	—/–40…+55	
Protection category		IP 20	IP 20	
Approvals relay (according to type)		CE SIL EAC PG RINA cULus		

38 Series - Relay interface modules - 1 Pole 16 A and 2 Pole 8 A EMR

Electromechanical relay interface modules, 14 mm wide.

38.01 and 38.11 - 1 Pole 16 A
38.52 and 38.62 - 2 Pole 8 A

Ideal interface for PLC and electronic systems

- Sensitive DC coil or AC/DC coil versions
- Integral coil indication and protection circuit
- Instant ejection of relay using plastic retaining clip
- UL Listing (certain relay/socket combinations)
- 35 mm rail (EN 60715) mounting

38.01/52
Screw terminal

38.11/62
Screwless terminal

38.01/38.11

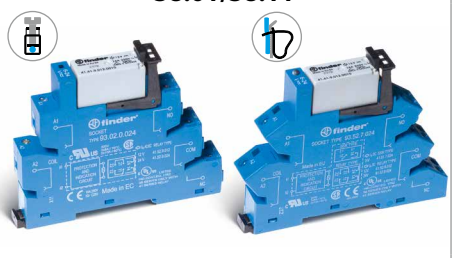

- Screw terminal and screwless terminal
- 1 pole electromechanical relay
- 35 mm rail (EN 60715) mounting

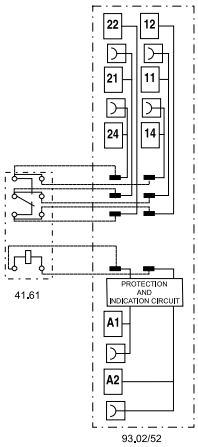

* For currents > 10 A, contact terminals must be connected in parallel (21 with 11, 24 with 14, 22 with 12).

38.52/38.62

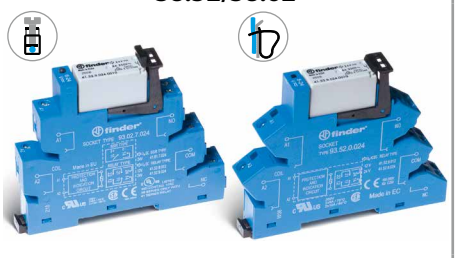

- Screw terminal and screwless terminal
- 2 pole electromechanical relay
- 35 mm rail (EN 60715) mounting

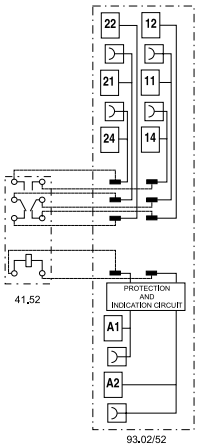

For outline drawing see page 12

		38.01/38.11	38.52/38.62
Contact specification			
Contact configuration		1 CO (DPDT)	2 CO (DPDT)
Rated current/Maximum peak current	A	16*/30	8/15
Rated voltage/ Maximum switching voltage	V AC	250/400	250/400
Rated load AC1	VA	4000	2000
Rated load AC15 (230 V AC)	VA	750	400
Single phase motor rating (230 V AC)	kW	0.5	0.3
Breaking capacity DC1: 30/110/220 V	A	16/0.3/0.12	8/0.3/0.12
Minimum switching load	mW (V/mA)	300 (5/5)	300 (5/5)
Standard contact material		AgNi	AgNi
Coil specification			
Nominal voltage (U_N)	V AC/DC	24 - 60 - (110…125) - (220…240)	24 - 60 - (110…125) - (220…240)
	V AC	230…240	230…240
	V DC	12 - 24 - 60	12 - 24 - 60
Rated power AC/DC	VA (50 Hz)/W	See page 9	See page 9
Operating range	AC/DC	0.8…1.1	0.8…1.1
	DC	(0.8…1.2)U_N	(0.8…1.2)U_N
Holding voltage	AC/DC	0.6 U_N / 0.6 U_N	0.6 U_N / 0.6 U_N
Must drop-out voltage	AC/DC	0.1 U_N / 0.05 U_N	0.1 U_N / 0.05 U_N
Technical data			
Mechanical life AC/DC	cycles	$10 \cdot 10^6$	$10 \cdot 10^6$
Electrical life at rated load AC1	cycles	$50 \cdot 10^3$	$60 \cdot 10^3$
Operate/release time	ms	8/10	8/10
Insulation between coil and contacts (1.2/50 µs)	kV	6 (8 mm)	6 (8 mm)
Dielectric strength between open contacts	V AC	1000	1000
Ambient temperature range ($U_N \leq 60$ V/> 60 V)	°C	–40…+70/–40…+55	–40…+70/–40…+55
Protection category		IP 20	IP 20
Approvals relay (according to type)		CE EAC RINA cULus	

II-2014, www.findernet.com

Single output - solid state relay interface modules, 14 mm wide.

Ideal interface for PLC and electronic systems

- DC input versions
- Supplied with integral coil indication and protection circuit
- Silent, high switching speed and long electrical life
- Instant ejection of relay using plastic retaining clip
- UL Listing (certain relay/socket combinations)
- 35 mm rail (EN 60715) mounting

38.31
Screw terminal

38.41
Screwless terminal

38.31/38.41

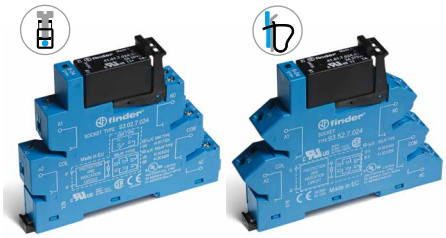

- Screw terminal and screwless terminal
- AC or DC output switching
- SSR relay - DC input voltage
- 35 mm rail (EN 60715) mounting

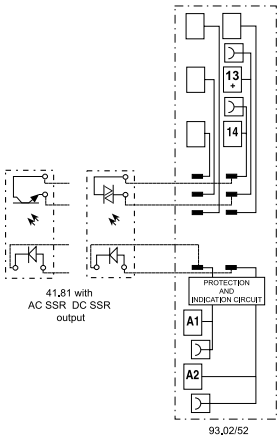

For outline drawing see page 12

Output specification			
Contact configuration		1 NO (SPST-NO)	1 NO (SPST-NO)
Rated current/ Maximum peak current (10 ms)	A	5/40	3/40
Rated voltage/ Maximum blocking voltage	V	(24/35)DC	(240/—)AC
Switching voltage range	V	(1.5…24)DC	(12…275)AC
Repetitive peak off-state voltage	V_{pk}	—	600
Minimum switching current	mA	1	50
Max. "OFF-state" leakage current	mA	0.01	1
Max. "ON-state" voltage drop	V	0.3	1.1
Input specification			
Nominal voltage (U_N)	V AC/DC	24	
	V DC	12 - 24	
Operating range	V DC	See page 10	
Control current	mA	See page 10	
Release voltage	V DC	See page 10	
Technical data			
Operate/release time: ON/OFF (DC input)	ms	0.05/0.25	12/12
Dielectric strength between input/output	V AC	2500	
Ambient temperature range	°C	–20…+55	
Environmental protection		IP20	
Approvals relay (according to type)		CE SP EAC PG RINA cULus	

B

Ordering information

Electromechanical relay - 1 or 2 Pole

Example: 38 series screw terminal relay interface module, 1 CO (SPDT), sensitive 12 V DC coil.

3	8	.	5	1	.	7	.	0	2	4	.	0	0	5	0
												A	B	C	D

Series

Type
0 = Electromechanical 16 A relay, with screw terminal
1 = Electromechanical 16 A relay, with screwless terminal
2 = Timer multifunction (AI, DI, GI, SW), with screw terminal
5 = Electromechanical relay, with screw terminal
6 = Electromechanical relay, with screwless terminal

No. of poles
1 = 1 pole, 6 or 16 A
2 = 2 pole, 8 A

Coil version
0 = AC (50/60 Hz)/DC
3 = Leakage current suppression for (110…125)V AC/DC - (230…240)V AC
7 = Sensitive DC, (6, 12, 24, 48, 60)V only
8 = AC (50/60 Hz)

Coil voltage
See coil specifications

D: Special versions
0 = Standard

C: Options
5 = Standard DC
6 = Standard AC or AC/DC

B: Contact circuit
0 = CO (nPDT)

A: Contact material
0 = AgNi Standard
4 = $AgSnO_2$
5 = AgNi + Au

Selecting features and options: only combinations in the same row are possible.

Type	Coil version	A	B	C	D
38.01/11	7	0 - 4	0	5	0
38.01/11	0 - 8	0 - 4	0	6	0
38.51/61	7	0 - 4 - 5	0	5	0
38.51/61	0 - 3 - 8	0 - 4 - 5	0	6	0
38.52/62	7	0 - 5	0	5	0
38.52/62	0 - 8	0 - 5	0	6	0
38.21	0	0	0	6	0

B

Technical data - 1 & 2 Pole Electromechanical Relays

Insulation						
Insulation according to EN 61810-1	insulation rated voltage	V	250		400	
	rated impulse withstand voltage	kV	4		4	
	pollution degree		3		2	
	overvoltage category		III		III	
Insulation between coil and contacts (1.2/50 µs)		kV	6 (8 mm)			
Dielectric strength between open contacts		V AC	1000			
Conducted disturbance immunity						
Burst (5…50)ns, 5 kHz, on A1 - A2			EN 61000-4-4		level 4 (4 kV)	
Surge (1.2/50 µs) on A1 - A2 (differential mode)			EN 61000-4-5		level 3 (2 kV)	
Other data			**1 Pole 6 A**		**1 Pole 16 A - 2 Pole 8 A**	
Bounce time: NO/NC		ms	1/6		2/5	
Vibration resistance (10…55)Hz: NO/NC		g	10/5		15/2	
Power lost to the environment	without contact current	W	0.2 (12 V) - 0.9 (240 V)		0.5 (24 V) - 0.9 (240 V)	
	with rated current	W	0.5 (12 V) - 1.5 (240 V)		1.3 (24 V) - 1.7 (240 V)	
Terminals			**38.21 / 38.51**		**38.61**	
Wire strip length		mm	10		10	
⊖ Screw torque		Nm	0.5		—	
Max. wire size			solid cable	stranded cable	solid cable	stranded cable
		mm²	1 x 2.5 / 2 x 1.5	1 x 2.5 / 2 x 1.5	1 x 2.5	1 x 2.5
		AWG	1 x 14 / 2 x 16	1 x 14 / 2 x 16	1 x 14	1 x 14
			38.01 / 38.52		**38.11 / 38.62**	
Wire strip length		mm	10		10	
⊖ Screw torque		Nm	0.5		—	
Max. wire size			solid cable	stranded cable	solid cable	stranded cable
		mm²	1 x 2.5 / 2 x 1.5	1 x 2.5 / 2 x 1.5	1 x 2.5	1 x 2.5
		AWG	1 x 14 / 2 x 16	1 x 14 / 2 x 16	1 x 14	1 x 14

Contact specification - 1 & 2 Pole Electromagnetic Relays

F 38 - Electrical life (AC) v contact current, 1 Pole 6 A

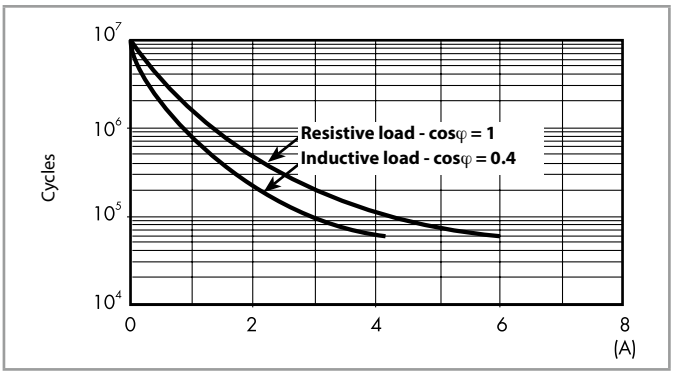

H 38 - Maximum DC1 breaking capacity, 1 Pole 6 A

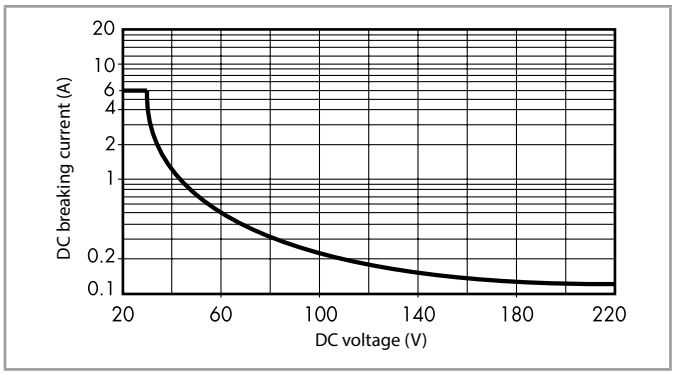

F 38 - Electrical life (AC) v contact current, 1 Pole 16 A and 2 Pole 8 A

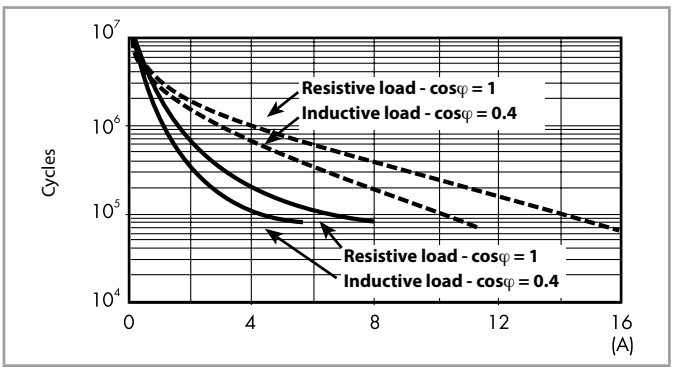

H 38 - Maximum DC1 breaking capacity, 1 Pole 16 A and 2 Pole 8 A

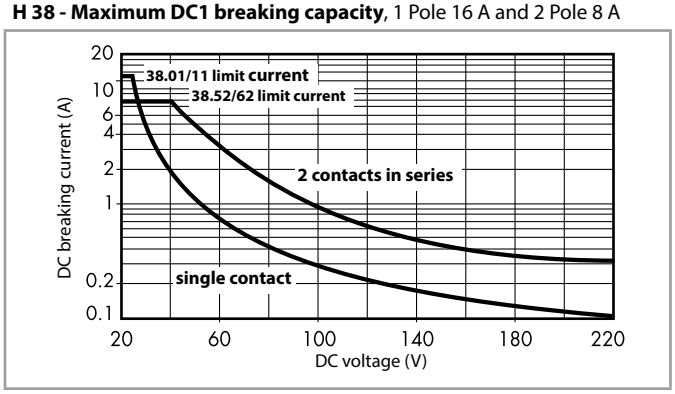

———: 2 Pole 8 A

———: 1 Pole 16 A

- When switching a resistive load (DC1) having voltage and current values under the curve, an electrical life of ≥ 60 · 10^3 (1 Pole) or ≥ 80 · 10^3 (2 Pole) can be expected.
- In the case of DC13 loads, the connection of a diode in parallel with the load will permit a similar electrical life as for a DC1 load.
  Note: the release time for the load will be increased.

II-2014, www.findernet.com

Coil specifications - 1 Pole 6 A Electromechnical Relay

Coil data sensitive DC, 1 Pole

Nominal voltage U_N	Coil code	Operating range U_{min}	Operating range U_{max}	Rated coil consumption I at U_N	Power consumption P at U_N
V		V	V	mA	W
6	**7**.006	4.8	7.2	35	0.2
12	**7**.012	9.6	14.4	15.2	0.2
24	**7**.024	19.2	28.8	10.4	0.3
48	**7**.048	38.4	57.6	6.3	0.3
60	**7**.060	48	72	7	0.4

Coil data AC/DC, 1 Pole

Nominal voltage U_N	Coil code	Operating range U_{min}	Operating range U_{max}	Rated coil consumption I at U_N	Power consumption P at U_N
V		V	V	mA	VA/W
12	**0**.012	9.6	13.2	16	0.2/0.2
24	**0**.024	19.2	26.4	12	0.3/0.2
48	**0**.048	38.4	52.8	6.9	0.3/0.3
60	**0**.060	48	66	7	0.5/0.5
110…125	**0**.125	88	138	5(*)	0.6/0.6(*)
220…240	**0**.240	176	264	4(*)	1/0.9(*)

(*) Rated coil consumption and power consumption values relate to U_N = 125 and 240 V.

Coil data AC, 1 Pole (indicated for max ambient temperature +70 °C)

Nominal voltage U_N	Coil code	Operating range U_{min}	Operating range U_{max}	Rated coil consumption I at U_N	Power consumption P at U_N
V		V	V	mA	VA/W
(230…240) AC	**8**.240	184	264	3	0.7/0.3

Coil data, leakage current suppression types, 1 Pole

Nominal voltage U_N	Coil code	Operating range U_{min}	Operating range U_{max}	Rated coil consumption I at U_N	Power consumption P at U_N
V		V	V	mA	VA/W
(110…125) AC/DC	**3**.125	94	138	8(*)	1/1(*)
(230…240) AC	**3**.240	184	264	7(*)	1.7/0.5(*)

(*) Rated coil consumption and power consumption values relate to U_N = 125 and 240 V.

The 38 Series interface modules (supply version 3) have built-in leakage current suppression to address industry concerns of the contacts not dropping-out when there is residual current in the circuit; at (110…125)V AC and (230…240)V AC.

This problem can occur, for example, when connecting the interface modules to PLC,s with triac outputs or when connecting via relatively long cables.

Coil specifications - 1 Pole 16 A and 2 Pole 8 A Electromechanical Relay

Coil data sensitive DC, 1 Pole 16 A and 2 Pole 8 A

Nominal voltage U_N	Coil code	Operating range U_{min}	Operating range U_{max}	Rated coil consumption I at U_N	Power consumption P at U_N
V		V	V	mA	W
12	**7**.012	9.6	14.4	41	0.5
24	**7**.024	19.2	28.8	19.5	0.5
60	**7**.060	48	72	8	0.5

Coil data AC/DC, 1 Pole 16 A and 2 Pole 8 A

Nominal voltage U_N	Coil code	Operating range U_{min}	Operating range U_{max}	Rated coil consumption I at U_N	Power consumption P at U_N
V		V	V	mA	W
24	**0**.024	19.2	26.4	20	0.5/0.5
60	**0**.060	48	66	7.1	0.5/0.5
110…125	**0**.125	88	138	4.6	0.6/0.6
220…240	**0**.240	184	264	3.8	0.9/0.9

Coil data AC, 1 Pole 16 A and 2 Pole 8 A

Nominal voltage U_N	Coil code	Operating range U_{min}	Operating range U_{max}	Rated coil consumption I at U_N	Power consumption P at U_N
V		V	V	mA	VA/W
230…240	**8**.230	184	264	5.3	1.2/0.6

Coil specification - 1 & 2 Pole Electromagnetic Relays

R 38 - DC coil operating range v ambient temperature

1 Pole and 2 Pole

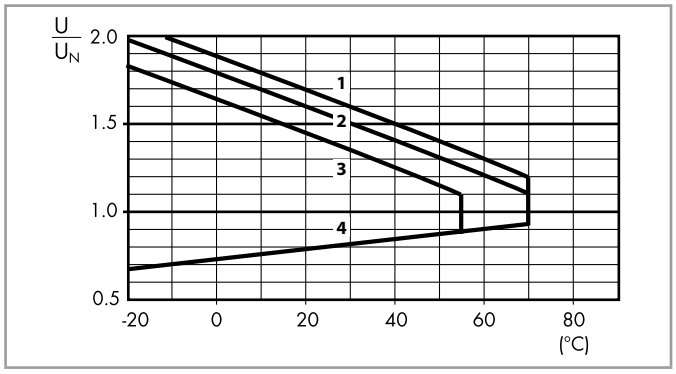

1 - Max. permitted coil voltage at nominal load (DC coil).
2 - Max. permitted coil voltage at nominal load (AC/DC coils U ≤ 60 V).
3 - Max. permitted coil voltage at nominal load (AC/DC coils U > 60 V).
4 - Min pick-up voltage with coil at ambient temperature.

B

Technical data - Solid State Relays

Other data			38.81/38.91		38.31/38.41	
Power lost to the environment	without output current	W	0.25 (24 V DC)		0.5	
	with rated current	W	0.4		2.2 (DC output)/3 (AC output)	
Terminals			**38.81**		**38.91**	
Wire strip length		mm	10		10	
⊖ Screw torque		Nm	0.5		—	
Max. wire size			solid cable	stranded cable	solid cable	stranded cable
		mm^2	1 x 2.5 / 2 x 1.5	1 x 2.5 / 2 x 1.5	1 x 2.5	1 x 2.5
		AWG	1 x 14 / 2 x 16	1 x 14 / 2 x 16	1 x 14	1 x 14
			38.31		**38.41**	
Wire strip length		mm	10		10	
⊖ Screw torque		Nm	0.5		—	
Max. wire size			solid cable	stranded cable	solid cable	stranded cable
		mm^2	1 x 2.5 / 2 x 1.5	1 x 2.5 / 2 x 1.5	1 x 2.5	1 x 2.5
		AWG	1 x 14 / 2 x 16	1 x 14 / 2 x 16	1 x 14	1 x 14

Input specifications - Solid State Relays type 38.81 and 38.91 - 6.2 mm wide

Input data DC

Nominal voltage U_N	Supply code	Operating range U_{min}	Operating range U_{max}	Release voltage U	Rated coil consumption I at U_N	Power consumption P
V		V	V	V	mA	W
6	**7**.006	5	7.2	2.4	7	0.2
24	**7**.024	16.8	30	10	10.5	0.3
60	**7**.060	35.6	72	20	6.5	0.4

Input data AC/DC

Nominal voltage U_N	Supply code	Operating range U_{min}	Operating range U_{max}	Release voltage U	Rated coil consumption I at U_N	Power consumption P
V		V	V	V	mA	VA/W
110…125	**0**.125	88	138	22	5.5*	0.7/0.7
220…240	**0**.240	184	264	44	3.5*	1/0.9

(*) Rated coil consumption and power consumption values relate to U_N = 125 and 240 V.

Input data - Leakage current suppression types

Nominal voltage U_N	Supply code	Operating range U_{min}	Operating range U_{max}	Release voltage U	Rated coil consumption I at U_N	Power consumption P at U_N
V		V	V	V	mA	W
110…125 AC/DC	**3**.125	94	138	44	8(*)	1/1(*)
230…240 AC	**3**.240	184	264	72	6.5(*)	1.6/0.6(*)

(*) Rated coil consumption and power consumption values relate to U_N = 125 and 240 V.

The 38 Series interface modules (supply version 3) have built-in leakage current suppression to address industry concerns of the contacts not dropping-out when there is residual current in the circuit; at (110…125) V AC and (230…240)V AC.

This problem can occur, for example, when connecting the interface modules to PLC,s with triac outputs or when connecting via relatively long cables.

Input specification - Solid State Relay types 38.31 and 38.41 - 14 mm wide

Input data DC

Nominal voltage U_N	Supply code	Operating range U_{min}	Operating range U_{max}	Release voltage U	Rated coil consumption I at U_N	Power consumption P
V		V	V	V	mA	W
12	**7**.012	9.6	18	5	9	0.2
24	**7**.024	16.8	30	5	12	0.3

Input data AC/DC

Nominal voltage U_N	Supply code	Operating range U_{min}	Operating range U_{max}	Release voltage U	Rated coil consumption I at U_N	Power consumption P
V		V	V	V	mA	W
24	**0**.024	16.8	30	9	16.5	0.3

Additional technical data - Timed Interface Module

EMC specifications				
Type of test			**Reference standard**	
Electrostatic discharge	contact discharge		EN 61000-4-2	4 kV
	air discharge		EN 61000-4-2	8 kV
Radio-frequency electromagnetic field (80 ÷ 1000 MHz)			EN 61000-4-3	10 V/m
Fast transients (burst) (5-50 ns, 5 kHz) on Supply terminals			EN 61000-4-4	4 kV
Surges (1.2/50 µs) on Supply terminals	common mode		EN 61000-4-5	4 kV
	differential mode		EN 61000-4-5	4 kV
Radio-frequency common mode (0.15 ÷ 80 MHz) on Supply terminals			EN 61000-4-6	10 V
Radiated and conducted emission			EN 55022	class B
Other data			**EMR**	**SSR**
Power lost to the environment	without contact current	W	0.1	0.1
	with rated current	W	0.6	0.5
Terminals			**38.21**	
Wire strip length		mm	10	
Screw torque		Nm	0.5	
Max. wire size			solid cable	stranded cable
		mm²	1 x 2.5 / 2 x 1.5	1 x 2.5 / 2 x 1.5
		AWG	1 x 14 / 2 x 16	1 x 14 / 2 x 16

B

Times scales

(0.1…3)s (3…60)s (1…20)min (0.3…6)h

Functions

LED	Supply voltage	NO contact/output
	OFF	Open
	ON	Open (time in progress)
	ON	Closed

Wiring diagram

U = Supply voltage = Output contact

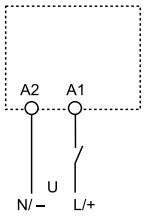

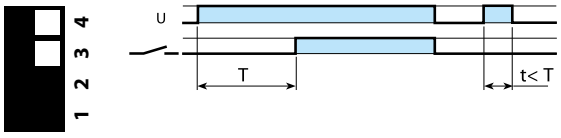

(AI) On-delay.
Apply power to timer.
Output contacts transfer after preset time has elapsed.
Reset occurs when power is removed.

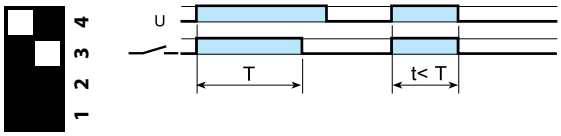

(DI) Interval.
Apply power to timer.
Output contacts transfer immediately.
After the preset time has elapsed, contacts reset.

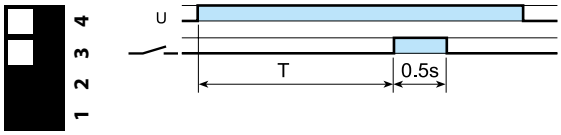

(GI) Pulse delayed.
Apply power to timer. Output contacts transfer after preset time has elapsed. Reset occurs after a fixed time of 0.5 s.

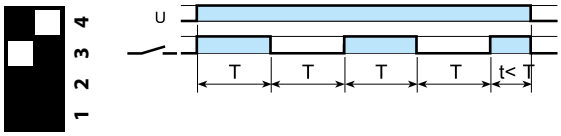

(SW) Symmetrical flasher (starting pulse on).
Apply power to timer.
Output contacts transfer immediately and cycle between ON and OFF for as long as power is applied.
The ratio is 1:1 (time on = time off).

Outline drawings

38.21
38.51 / 38.51.3
38.81 / 38.81.3
Screw terminal

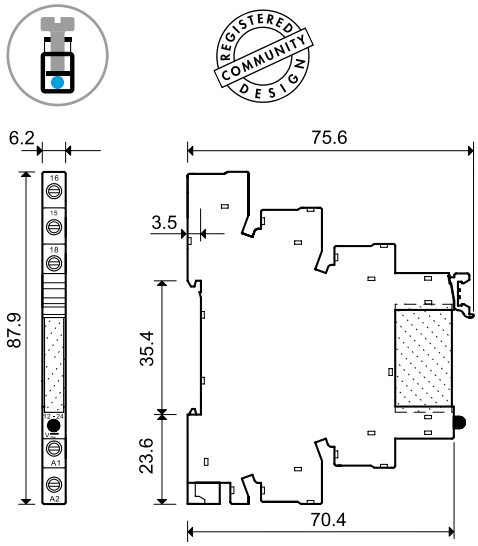

38.01
38.31
38.52
Screw terminal

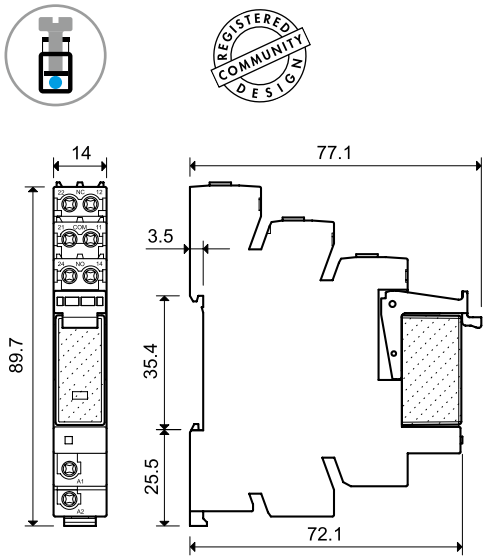

38.61 / 38.61.3
38.91 / 38.91.3
Screwless terminal

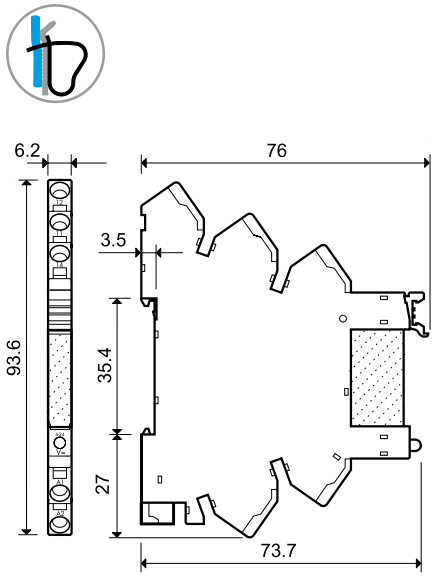

38.11
38.41
38.62
Screwless terminal

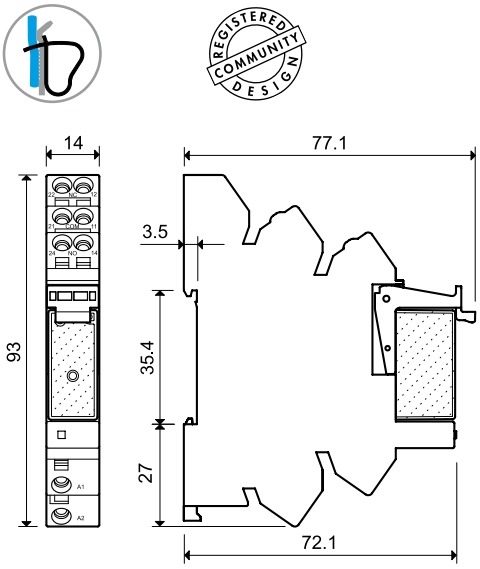

II-2014, www.findernet.com

Electromechanical Relay & Socket Combinations

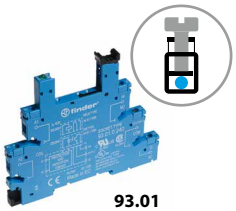
93.01

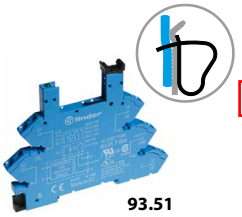
93.51

93.02

93.52

Approvals (according to type):

Certain relay/socket combinations

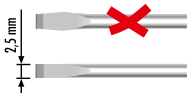

Screw terminal - 1 Pole relay 6 A

Interface Module Code	Coil voltage	Relay	Socket
38.51.0.012.0060	12 V AC/DC	34.51.7.012.0010	93.01.0.024
38.51.0.024.0060	24 V AC/DC	34.51.7.024.0010	93.01.0.024
38.51.0.048.0060	48 V AC/DC	34.51.7.048.0010	93.01.0.060
38.51.0.060.0060	60 V AC/DC	34.51.7.060.0010	93.01.0.060
38.51.0.125.0060	(110…125)V AC/DC	34.51.7.060.0010	93.01.0.125
38.51.0.240.0060	(220…240)V AC/DC	34.51.7.060.0010	93.01.0.240
38.51.3.125.0060	(110…125)V AC/DC	34.51.7.060.0010	93.01.3.125
38.51.3.240.0060	(230…240)V AC	34.51.7.060.0010	93.01.3.240
38.51.7.006.0050	6 V DC	34.51.7.005.0010	93.01.7.024
38.51.7.012.0050	12 V DC	34.51.7.012.0010	93.01.7.024
38.51.7.024.0050	24 V DC	34.51.7.024.0010	93.01.7.024
38.51.7.048.0050	48 V DC	34.51.7.048.0010	93.01.7.060
38.51.7.060.0050	60 V DC	34.51.7.060.0010	93.01.7.060
38.51.8.240.0060	(230…240)V AC	34.51.7.060.0010	93.01.8.240

Screwless terminal - 1 Pole relay 6 A

Interface Module Code	Coil voltage	Relay	Socket
38.61.0.012.0060	12 V AC/DC	34.51.7.012.0010	93.51.0.024
38.61.0.024.0060	24 V AC/DC	34.51.7.024.0010	93.51.0.024
38.61.0.125.0060	(110…125)V AC/DC	34.51.7.060.0010	93.51.0.125
38.61.0.240.0060	(220…240)V AC/DC	34.51.7.060.0010	93.51.0.240
38.61.3.125.0060	(110…125)V AC/DC	34.51.7.060.0010	93.51.3.125
38.61.3.240.0060	(230…240)V AC	34.51.7.060.0010	93.51.3.240
38.61.7.012.0050	12 V DC	34.51.7.012.0010	93.51.7.024
38.61.7.024.0050	24 V DC	34.51.7.024.0010	93.51.7.024
38.61.8.240.0060	(230…240)V AC	34.51.7.060.0010	93.51.8.240

Screw terminal - 1 Pole relay 16 A

Interface Module Code	Coil voltage	Relay	Socket
38.01.7.012.0050	12 V DC	41.61.9.012.0010	93.02.7.024
38.01.7.024.0050	24 V DC	41.61.9.024.0010	93.02.7.024
38.01.7.060.0050	60 V DC	41.61.9.060.0010	93.02.7.060
38.01.0.024.0060	24 V AC/DC	41.61.9.024.0010	93.02.0.024
38.01.0.060.0060	60 V AC/DC	41.61.9.060.0010	93.02.0.060
38.01.0.125.0060	125 V AC/DC	41.61.9.110.0010	93.02.0.125
38.01.0.240.0060	240 V AC/DC	41.61.9.110.0010	93.02.0.240
38.01.8.230.0060	230 V AC	41.61.9.110.0010	93.02.8.230

Screwless terminal - 1 Pole relay 16 A

Interface Module Code	Coil voltage	Relay	Socket
38.11.7.012.0050	12 V DC	41.61.9.012.0010	93.52.7.024
38.11.7.024.0050	24 V DC	41.61.9.024.0010	93.52.7.024
38.11.7.060.0050	60 V DC	41.61.9.060.0010	93.52.7.060
38.11.0.024.0060	24 V AC/DC	41.61.9.024.0010	93.52.0.024
38.11.0.060.0060	60 V AC/DC	41.61.9.060.0010	93.52.0.060
38.11.0.125.0060	125 V AC/DC	41.61.9.110.0010	93.52.0.125
38.11.0.240.0060	240 V AC/DC	41.61.9.110.0010	93.52.0.240
38.11.8.230.0060	230 V AC	41.61.9.110.0010	93.52.8.230

Screw terminal - 2 Pole relay 8 A

Interface Module Code	Coil voltage	Relay	Socket
38.52.0.024.0060	24 V AC/DC	41.52.9.024.0010	93.02.0.024
38.52.0.060.0060	60 V AC/DC	41.52.9.060.0010	93.02.0.060
38.52.0.125.0060	(110…125)V AC/DC	41.52.9.110.0010	93.02.0.125
38.52.0.240.0060	(220…240)V AC/DC	41.52.9.110.0010	93.02.0.240
38.52.7.012.0050	12 V DC	41.52.9.012.0010	93.02.7.024
38.52.7.024.0050	24 V DC	41.52.9.024.0010	93.02.7.024
38.52.7.060.0050	60 V DC	41.52.9.060.0010	93.02.7.060
38.52.8.230.0060	(230…240)V AC	41.52.9.110.0010	93.02.8.230

Screwless terminal - 2 Pole relay 8 A

Interface Module Code	Coil voltage	Relay	Socket
38.62.0.024.0060	24 V AC/DC	41.52.9.024.0010	93.52.0.024
38.62.0.060.0060	60 V AC/DC	41.52.9.060.0010	93.52.0.060
38.62.0.125.0060	(110…125)V AC/DC	41.52.9.110.0010	93.52.0.125
38.62.0.240.0060	(220…240)V AC/DC	41.52.9.110.0010	93.52.0.240
38.62.7.012.0050	12 V DC	41.52.9.012.0010	93.52.7.024
38.62.7.024.0050	24 V DC	41.52.9.024.0010	93.52.7.024
38.62.7.060.0050	60 V DC	41.52.9.060.0010	93.52.7.060
38.62.8.230.0060	(230…240)V AC	41.52.9.110.0010	93.52.8.230

B

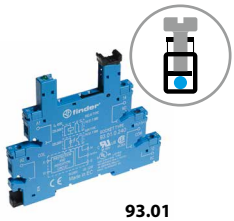

93.01

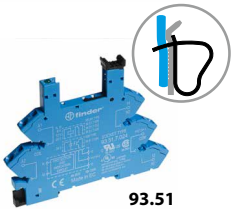

93.51

Approvals
(according to type):

Certain relay/socket combinations

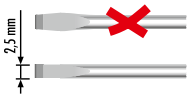

Solid State Relay & Socket Combinations - 6.2 mm wide

Screw terminal			
Interface Module Code	**Input voltage**	**Relay**	**Socket**
38.81.7.006.xxxx	6 V DC	34.81.7.005.xxxx	93.01.7.024
38.81.7.024.xxxx	24 V DC	34.81.7.024.xxxx	93.01.7.024
38.81.7.060.xxxx	60 V DC	34.81.7.060.xxxx	93.01.7.060
38.81.0.125.xxxx	(110…125)V AC/DC	34.81.7.060.xxxx	93.01.0.125
38.81.0.240.xxxx	(220…240)V AC/DC	34.81.7.060.xxxx	93.01.0.240
38.81.3.125.xxxx	(110…125)V AC/DC	34.81.7.060.xxxx	93.01.3.125
38.81.3.240.xxxx	(230…240)V AC	34.81.7.060.xxxx	93.01.3.240
Screwless terminal			
Interface Module Code	**Input voltage**	**Relay**	**Socket**
38.91.7.006.xxxx	6 V DC	34.81.7.005.xxxx	93.51.7.024
38.91.7.024.xxxx	24 V DC	34.81.7.024.xxxx	93.51.7.024
38.91.7.060.xxxx	60 V DC	34.81.7.060.xxxx	93.51.7.060
38.91.0.125.xxxx	(110…125)V AC/DC	34.81.7.060.xxxx	93.51.0.125
38.91.0.240.xxxx	(220…240)V AC/DC	34.81.7.060.xxxx	93.51.0.240
38.91.3.125.xxxx	(110…125)V AC/DC	34.81.7.060.xxxx	93.51.3.125
38.91.3.240.xxxx	(230…240)V AC	34.81.7.060.xxxx	93.51.3.240

Example: .xxxx
.9024
.7048
.8240

93.52

Approvals
(according to type):

Solid State Relay & Socket Combinations - 14 mm wide

Screw terminal			
Interface Module Code	**Input voltage**	**Relay**	**Socket**
38.31.0.024.xxxx	24 V AC/DC	41.81.7.024.xxxx	93.02.0.024
38.31.7.012.xxxx	12 V DC	41.81.7.012.xxxx	93.02.7.024
38.31.7.024.xxxx	24 V DC	41.81.7.024.xxxx	93.02.7.024
Screwless terminal			
Interface Module Code	**Input voltage**	**Relay**	**Socket**
38.41.0.024.xxxx	24 V AC/DC	41.81.7.024.xxxx	93.52.0.024
38.41.7.012.xxxx	12 V DC	41.81.7.012.xxxx	93.52.7.024
38.41.7.024.xxxx	24 V DC	41.81.7.024.xxxx	93.52.7.024

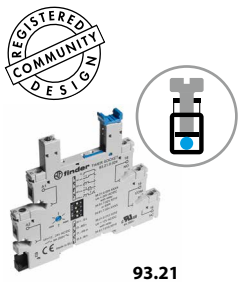

93.21

Approvals
(according to type):

SSR / EMR & Timer Socket Combinations

Screw terminal			
Interface Module Code	**Input / Coil voltage**	**Relay**	**Socket**
38.21.0.012.0060	12 V AC/DC	34.51.7.012.0010	93.21.0.024
38.21.0.024.0060	24 V AC/DC	34.51.7.024.0010	93.21.0.024
38.21.0.024.xxxx	24 V AC/DC	34.81.7.024.xxxx	93.21.0.024

Accessories

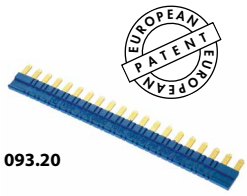

093.20

Approvals (according to type):

20-way jumper link for 3a8.21/51/61/81/91	093.20 (blue)	093.20.0 (black)	093.20.1 (red)
Rated values	36 A - 250 V		

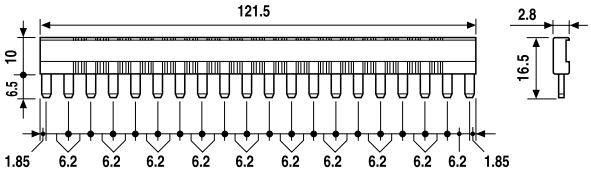

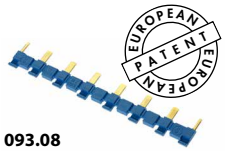

093.08

Approvals (according to type):

8-way jumper link for 38.01/11/31/41/52/62	093.08 (blue)	093.08.0 (black)	093.08.1 (red)
Rated values	10 A - 250 V		

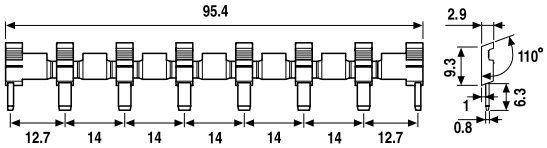

093.01

Plastic separator	093.01

Thickness 2 mm, required at the start and the end of a group of interfaces.
Can be used for visual separation group, must be used for:
- protective separation of different voltages of neighbouring PLC interfaces according to VDE 0106-101
- protection of cut jumper links

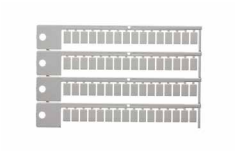

093.64

Sheet of marker tags for 38.21/51/61/81/91, plastic, 64 tags, 6 x 10 mm	093.64

060.72

Sheet of marker tags for 38.01/11/31/41/52/62, plastic, 72 tags, 6 x 12 mm	060.72

B

Features

1 & 2 pole relay interface modules, screw terminal socket, 15.8 mm wide.

Ideal interface for PLC and electronic systems
4C.01 - 1 Pole 16 A
4C.02 - 2 Pole 8 A

- AC coils or DC coils
- Instant ejection of relay using plastic retaining clip
- Supply status indication and coil suppression module as standard
- Identification label
- UL Listing (certain relay/socket combinations)
- 35 mm rail (EN 60715) mounting

4C.01 / 4C.02
Screw terminal

For outline drawing of 4C.01/02 see page 5

	4C.01	4C.02
	• 1 pole, 16 A • Screw terminal connection • 35 mm rail (EN 60715) mounting	• 2 pole, 8 A • Screw terminal connection • 35 mm rail (EN 60715) mounting
	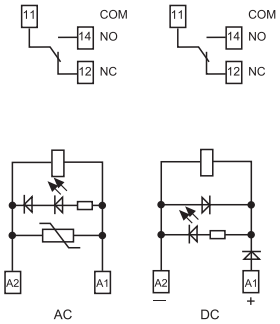	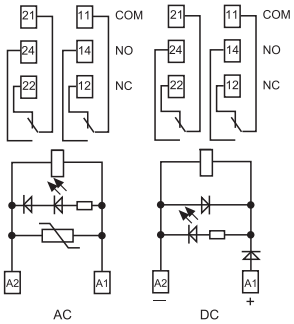
Contact specification		
Contact configuration	1 CO (SPDT)	2 CO (DPDT)
Rated current/Maximum peak current A	16/25	8/15
Rated voltage/Maximum switching voltage V AC	250/440	250/440
Rated load AC1 VA	4,000	2,000
Rated load AC15 (230 V AC) VA	750	350
Single phase motor rating (230 V AC) kW	0.55	0.37
Breaking capacity DC1: 30/110/220V A	16/0.5/0.15	6/0.5/0.15
Minimum switching load mW (V/mA)	300 (5/5)	300 (5/5)
Standard contact material	AgNi	AgNi
Coil specification		
Nominal voltage (U_N) V AC (50/60 Hz)	12 - 24 - 110 - 120 - 230	12 - 24 - 110 - 120 - 230
V DC	12 - 24 - 125	12 - 24 - 125
Rated power AC/DC VA (50 Hz)/W	1.2/0.5	1.2/0.5
Operating range AC	(0.8...1.1)U_N	(0.8...1.1)U_N
DC	(0.73...1.1)U_N	(0.73...1.1)U_N
Holding voltage AC/DC	0.8 U_N /0.4 U_N	0.8 U_N /0.4 U_N
Must drop-out voltage AC/DC	0.2 U_N /0.1 U_N	0.2 U_N /0.1 U_N
Technical data		
Mechanical life AC/DC cycles	$10 \cdot 10^6$	$10 \cdot 10^6$
Electrical life at rated load AC1 cycles	$100 \cdot 10^3$	$100 \cdot 10^3$
Operate/release time ms	15/5 (AC) - 15/12 (DC)	10/3 (AC) - 10/10 (DC)
Insulation between coil and contacts (1.2/50 µs) kV	6 (8 mm)	6 (8 mm)
Dielectric strength between open contacts V AC	1,000	1,000
Ambient temperature range °C	≤ 12A: –40...+70/>12A: –40...+50	–40...+70
Protection category	IP 20	IP 20
Approvals - relay (according to type)	CE SP EAC PG cULus DVE	

Ordering information

Example: 4C series, 35 mm rail (EN 60715) mount screw terminal relay interface module, 1 CO (SPDT) 16 A contacts, 24 V DC coil, green LED + diode.

4	C	.	0	1	.	9	.	0 2 4	.	0 (A)	0 (B)	5 (C)	0 (D)

Series

Type
0 = 35 mm rail (EN 60715) mount screw terminal socket
5 = 35 mm rail (EN 60715) mount screwless terminal socket

No. of poles
1 = 1 pole
2 = 2 pole

Coil version
8 = AC (50/60 Hz)
9 = DC

Coil voltage
See coil specifications

A: Contact material
0 = AgNi
4 = $AgSnO_2$
5 = AgNi + Au

B: Contact circuit
0 = CO (nPDT)

C: Options
5 = Standard for DC: green LED + diode (polarity +A1)
6 = Standard for AC: green LED + Varistor

D: Special version
0 = Standard

Selecting features and options: only combinations in the same row are possible.
Preferred selections for best availability are shown in **bold.**

Type	Coil version	A	B	C	D
4C.02	AC	**0** - 5	**0**	**6**	**0**
4C.52	DC	**0** - 5	**0**	**5**	**0**
4C.01	AC	**0** - 4 - 5	**0**	**6**	**0**
4C.51	DC	**0** - 4 - 5	**0**	**5**	**0**

Technical data

Insulation						
Insulation according to EN 61810-1	insulation rated voltage	V	250		440	
	rated impulse withstand voltage	kV	4		4	
	pollution degree		3		2	
	overvoltage category		III		III	
Insulation between coil and contacts (1.2/50 µs)		kV	6 (8 mm)			
Dielectric strength between open contacts		V AC	1,000			
Dielectric strength between adjacent contacts		V AC	2,000			
Conducted disturbance immunity						
Burst (5...50)ns, 5 kHz, on A1 - A2			EN 61000-4-4		level 4 (4 kV)	
Surge (1.2/50 µs) on A1 - A2 (differential mode)			EN 61000-4-5		level 3 (2 kV)	
Other data						
Bounce time: NO/NC		ms	2/6 (4C.01/51)		1/4 (4C.02/52)	
Vibration resistance (10...150)Hz: NO/NC		g	20/12			
Power lost to the environment	without contact current	W	0.6			
	with rated current	W	1.6 (4C.01/51)		2 (4C.02/52)	
Terminals			**4C.01/4C.02**		**4C.51/4C.52**	
Wire strip length		mm	8		8	
Screw torque		Nm	0.8		—	
Max. wire size			solid cable	stranded cable	solid cable	stranded cable
		mm^2	1x6/2x2.5	1x4/2x2.5	2x(0.2...1.5)	2x(0.2...1.5)
		AWG	1x10/2x14	1x12/2x14	2x(24...18)	2x(24...18)

B

Contact specification

F 4C - Electrical life (AC) v contact current
Types 4C.02/52

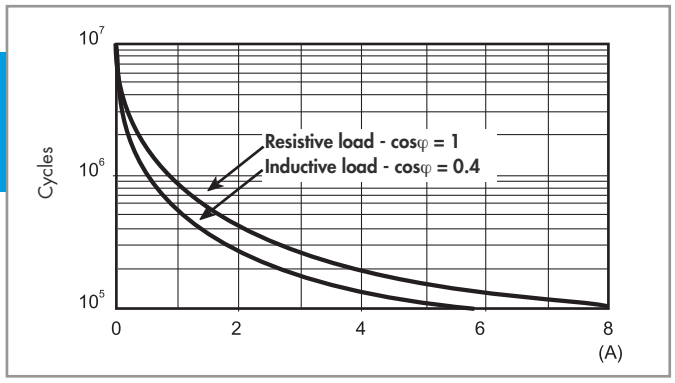

F 4C - Electrical life (AC) v contact current
Types 4C.01/51

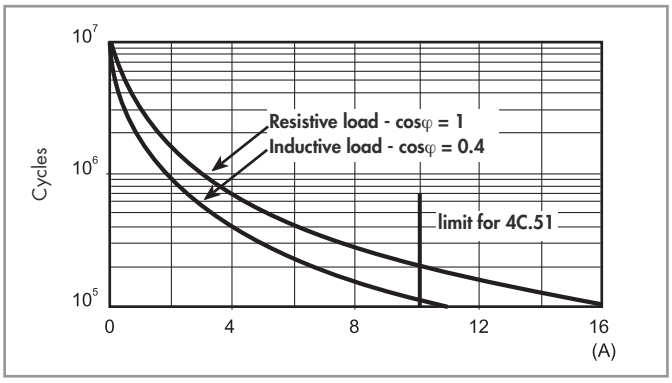

H 4C - Maximum DC1 breaking capacity

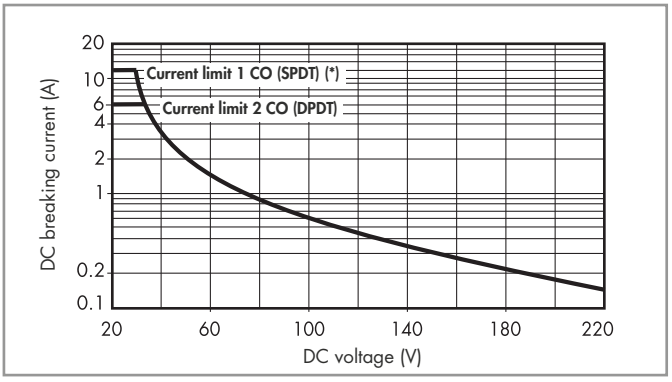

(*) Type 4C.01= 12 A, Type 4C.51= 10 A

- When switching a resistive load (DC1) having voltage and current values under the curve, an electrical life of ≥ $100 \cdot 10^3$ can be expected.
- In the case of DC13 loads, the connection of a diode in parallel with the load will permit a similar electrical life as for a DC1 load. Note: the release time for the load will be increased.

Coil specifications

DC coil data

Nominal voltage U_N V	Coil code	Operating range U_{min} V	U_{max} V	Resistance R Ω	Rated coil consumption I at U_N mA
12	**9**.012	8.8	13.2	300	40
24	**9**.024	17.5	26.4	1,200	20
125	**9**.125	91.2	138	32,000	3.9

AC coil data

Nominal voltage U_N V	Coil code	Operating range U_{min} V	U_{max} V	Resistance R Ω	Rated coil consumption I at U_N mA
12	**8**.012	9.6	13.2	80	90
24	**8**.024	19.2	26.4	320	45
110	**8**.110	88	121	6,900	9.4
120	**8**.120	96	132	9,000	8.4
230	**8**.230	184	253	28,000	5

R 4C - DC coil operating range v ambient temperature

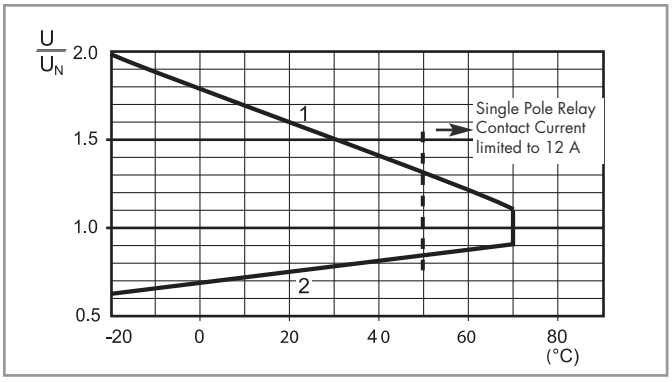

1 - Max. permitted coil voltage.
2 - Min. pick-up voltage with coil at ambient temperature.

R 4C - AC coil operating range v ambient temperature

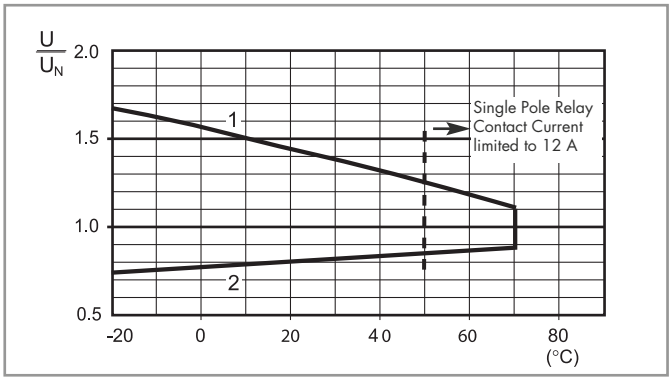

1 - Max. permitted coil voltage.
2 - Min. pick-up voltage with coil at ambient temperature.

------ Temperature limit for the single pole version under full 16 A contact current.

X-2013, www.findernet.com

Combinations

Certain relay/socket combinations

Code	Type of socket	Type of relay	Module	Retaining clip
4C.01	97.01	46.61	99.02	097.01
4C.02	97.02	46.52	99.02	097.01
4C.51	97.51	46.61	99.02	097.01
4C.52	97.52	46.52	99.02	097.01

Outline drawing

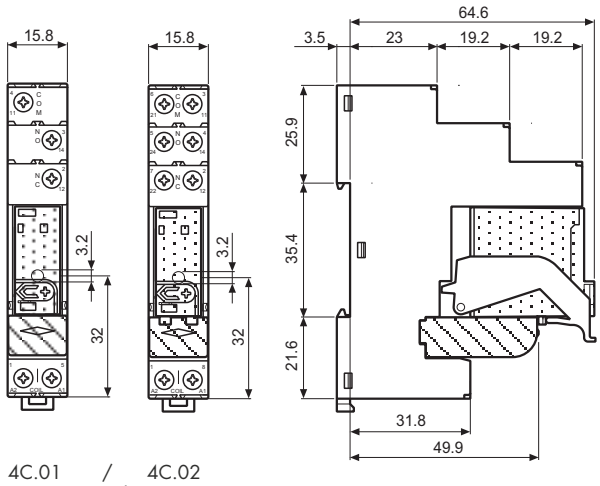

4C.01 / 4C.02
Screw terminal

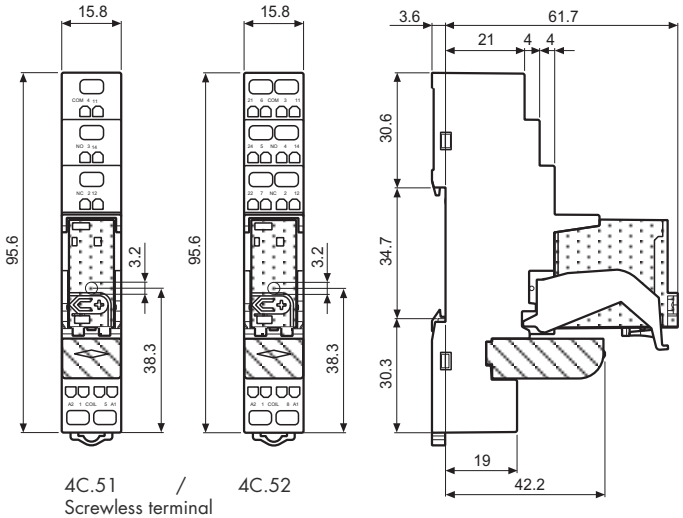

4C.51 / 4C.52
Screwless terminal

Accessories

095.18

8-way jumper link for 4C.01 and 4C.02	095.18 (blue)
Rated values	10 A - 250 V

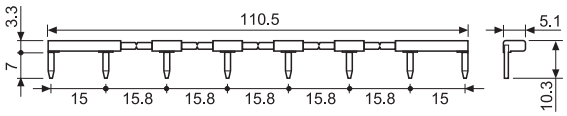

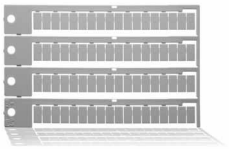

060.72

Sheet of marker tags, plastic, 72 tags, 6x12 mm	060.72

Packaging code

How to code and identify retaining clip and packaging options for relay interface module.

Example:

4 C . 0 1 . 9 . 0 2 4 . 0 0 5 0 S P A

A Standard packaging
B Blister packaging

SP Plastic retaining clip

MODEL #: IGNITION VER. 7.9

What's New in Ignition v7.9

See, Maintain, and Manage Your Enterprise with Ease

Ignition by Inductive Automation is the industry's only server-centric industrial automation software platform with unlimited licensing, built for connecting all your industrial devices, databases, and business data together in one central location. Now, with the new Ignition version 7.9, we've made it easier than ever to get, see, maintain, and manage your Ignition systems across your entire enterprise.

MODEL #: IGNITION VER. 7.9

What's New in Ignition v7.9

Gateway Status Section

Improved Troubleshooting

Rapidly pinpoint trouble spots in your Ignition Gateway in the revamped Gateway Status section. Rebuilt from the ground up, the new Status section improves your ability to troubleshoot and monitor the status of your Ignition installation.

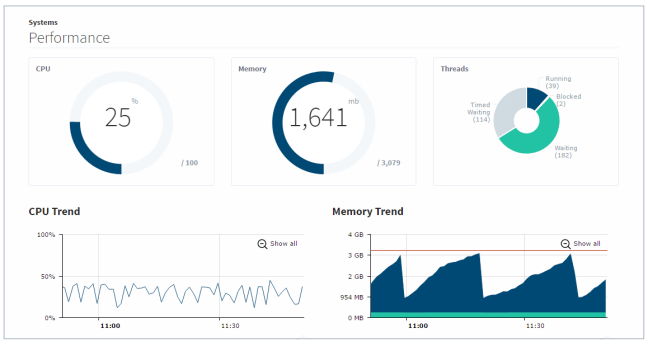

Visualize your Gateway's status in the performance overview.

At-a-Glance Informational Tools

Users now see improved at-a-glance information as well as tools that allow for deeper insight into what is happening inside an Ignition Gateway. For example, a subsystem may be overloaded and using too much CPU, or a connection to an external system may be faulty. In Ignition v7.9, it's now easier to quickly identify these problems and determine the steps to resolve them.

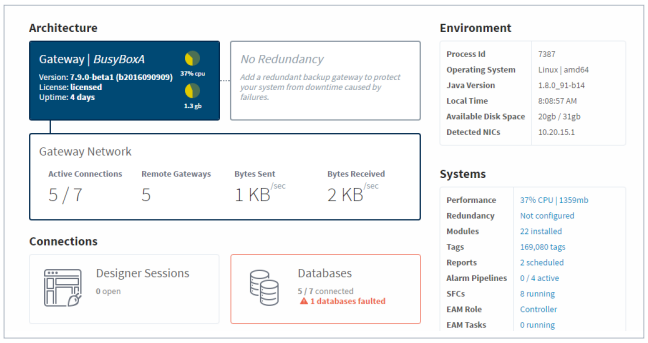

Resolve system issues more quickly with new tools to check into your Ignition system's architecture, connections, and more.

Annotated Logging System

The new system can annotate messages with contextual information, so it's easier for users to dig deep into the logging system with greater precision. The log information is searchable and filterable, allowing for precise pinpointing of diagnostic messages in the log history.

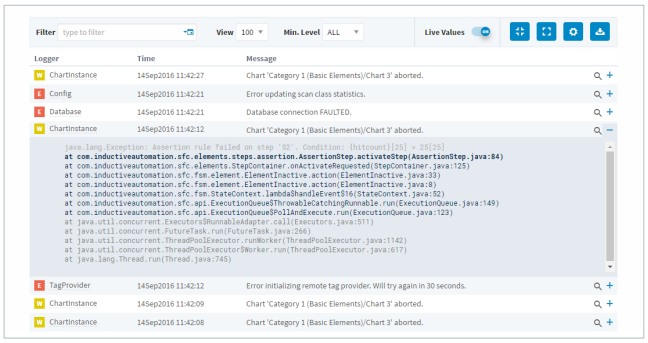

Search and filter your log information to diagnose problems more easily.

MODEL #: IGNITION VER. 7.9

Distributed Services on the Gateway Network

The new Distributed Services feature on the Gateway Network unlocks architectural possibilities for Ignition users. Ignition Gateways can now share unprecedented information between each other via a secure, high-performance network. New kinds of hub-and-spoke architectures and horizontal scale-out are now easy to achieve using Distributed Services that let Gateways share tags, alarms, and more. All services can be configured with fine-grained security based on the new Security Zone paradigm.

Scale-Out Architecture

The scale-out architecture links together several Ignition Gateways to form a decentralized system. The workload is split between tags and I/O Gateways that handle device data and front-end Gateways that handle client applications. This architecture scales out easily without overloading any single Gateway.

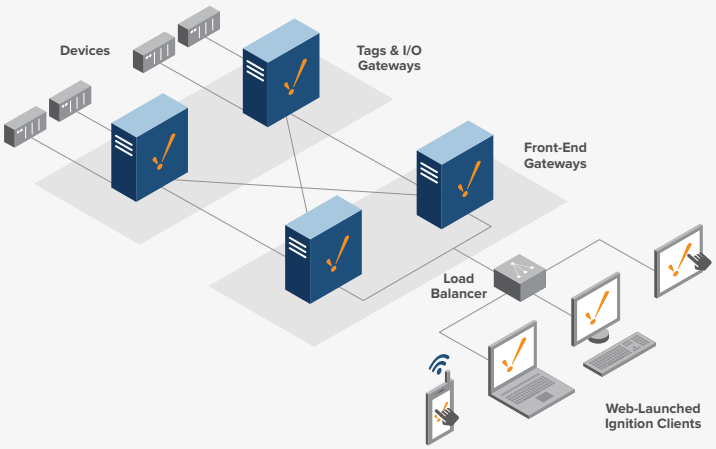

Hub & Spoke Architecture

In this architecture, multiple local and remote sites are linked together by a central Ignition Gateway. Each site is fully independent, operating with its own history, alarms, and clients, with the client Gateway being used for coordination and long-term history storage.

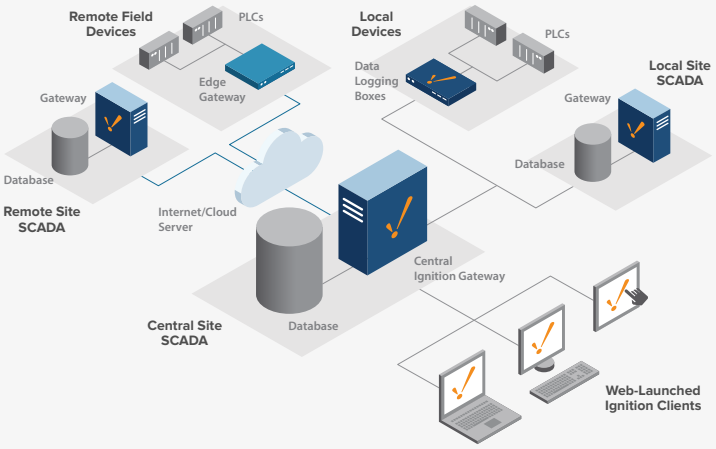

MODEL #: IGNITION VER. 7.9

Distributed Services in Ignition v7.9

Remote Tag Provider

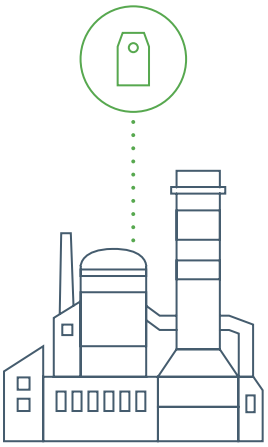

The Remote Tag Provider lets you view and utilize a Tag Provider from a different Gateway. It supports browsing, real-time value subscriptions, and full read/write/edit capabilities. Furthermore, multiple facilities are provided for accessing remote alarm status and tag history.

By utilizing Remote Tag Providers, you can make data available to other Gateways with minimal configuration. Furthermore, since only the currently subscribed tags are monitored, Remote Tag Providers can be an extremely effective means for scaling up support for many clients, by allowing you to create dedicated tag servers that are separated from the overhead of executing tags, polling devices, and so on.

Remote Tag Providers are built directly into the platform, and available in all editions of Ignition.

Remote History Provider

The Remote History Provider lets you access both the query and storage functionalities of a History Provider on a different Gateway. When storing to a remote connection, data is transferred through an efficient and compressed encoding, dramatically reducing the transfer cost compared to direct database access. By communicating directly with another Gateway, security is configured through the function-specific Service Security Policy system, built around Security Zones, which is more flexible and easier to configure than most database security models.

When querying historical data, all data is streamed and automatically aggregated from multiple servers, ensuring minimal overhead on the source servers, and seamless results on the querying side.

Remote History Providers are provided through the Tag Historian Module. As with the standard features of the module, storage requires a valid license on both sides, while query access is allowed at any time.

Remote Alarm Provider

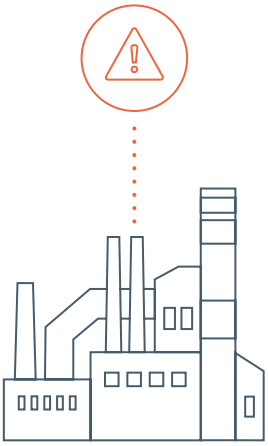

The Remote Alarm Provider offers several ways to utilize the alarm notification capabilities of a remote Ignition Gateway. Alarms can be sent through a central Gateway, with full support for remote acknowledgment delivery. This means that you can manage your Email, Voice, and SMS equipment in a central location, and provide those services to a multitude of Gateways.

After configuring a remote alarm provider, the Ignition Gateway will automatically expose the alarm pipelines configured on the remote system. Tags can then target those pipelines directly, with no further configuration required.

Alternatively, custom pipelines can be created, and can utilize the remote notification profile through the Notification Block, expanding the already significant power of alarm pipelines to include the notification capabilities of other Gateways.

The Remote Alarm Provider is provided by the Alarm Notification Module, which must be present on all Gateways involved. However, notification modules such as Voice, SMS, and so on, only need to be present on the Gateways that are ultimately executing the notification.

Community-Requested Features

It wouldn't be an Ignition release without a host of new features inspired by feedback from the community of Ignition users around the globe. Ignition v7.9 delivers many new features requested by our enthusiastic user base.

Global Templates in the Vision Module

Share all your Vision templates along all projects on a Gateway using the new Global Templates. Combine this with the Enterprise Administration Module, and you could set up a set of standard templates that is synchronized across an entire enterprise.

First-Class Multi-Monitor Support in the Vision Module

Create a seamless experience for multi-monitor workstations. The Vision Module now lets you open up multiple Vision client frames to occupy multiple monitors from the same Vision client instance. Each client frame shares credentials and client tags, and can directly interact with other client frames, allowing for an improved experience for multi-monitor setups.

Security Zones

Set security restrictions for various services based on where the call is coming from. Security Zones can be thought of as User Roles for machines and connections, based on IP address, machine name, etc.

Multiple Licenses

In order to better support our community of third-party module authors, we now allow for multiple license keys to be installed on a single Gateway. In this way, we give more control and autonomy to third-party module authors to sell their modules in a manner that most suits their market.

MODEL #: IGNITION VER. 7.9

What's New in Ignition v7.9

Internal User Source Password Policies

It's easy to natively use Ignition to comply with any password policy requirements through Ignition's built-in user source. It now supports password expiration, complexity requirements, and password re-use prevention.

OPC Array Read/Write Support

Write support has been added to array items for both memory and OPC tags. When supported by the server, individual elements and ranges of elements may be written as well.

ARM Support

Ignition v7.9.0 now includes a build targeting Linux systems based on the ARM architecture. Supported versions are 32-bit hard-float ARMv7 and ARMv8.

Vision Module Popup Movement Restriction

Prevent Vision popups from being dragged beyond the frame boundaries to ensure consistent sizing of primary windows.

Modbus Write Optimization Options

Limit the size of write requests via the new configuration options.

Enable/Disable UA Connections Via Scripting

Dynamically enable and disable configured OPC-UA connections through new scripting calls.

Supported Operating Systems

Windows Server 2008/2012
Windows 7, 8, and 10
Ubuntu Linux 12.04 or later
Other Java SE-enabled OSes[1]

Long-Term Support

Inductive Automation will support Ignition v7.9 for five years beginning with the date of its original dot-zero release (i.e., until October 2021).

Requirements

Java SE 8 (server)
Java SE 6, 7, or 8 (client)
1024 MB RAM[2]
1 GB free HD space

Supported Databases

Microsoft® SQL Server
MySQL
Oracle
PostgreSQL

Footnotes

[1] Ignition is compatible with any Java SE 8-enabled OS. Full support is only offered for listed OSes.

[2] Requirements vary by usage.

To learn more about Ignition v7.9, please contact an account rep at: ***800.266.7798, ext. 247***

inductive automation
800.266.7798
www.inductiveautomation.com

Ignition by inductive automation

Bases

MODEL #: P2-11B

P2-04B	$69.00
P2-07B	$99.00
P2-11B	$129.00
P2-15B	$155.00

The P2-04B, P2-07B, P2-11B, and P2-15B are 4, 7, 11, and 15-slot I/O bases respectively.

See Dimensions and Installation for base dimensions.

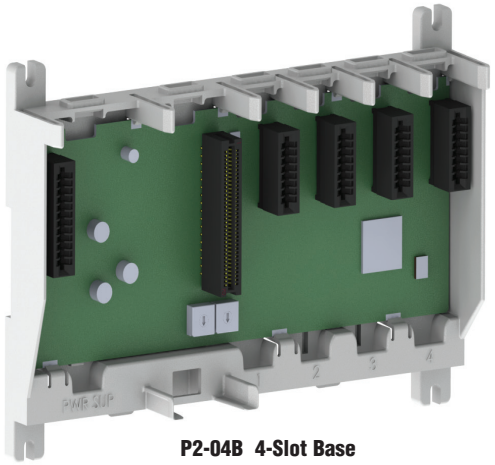

P2-04B 4-Slot Base

Base Specifications

Input or Output Modules per Base	4, 7, 11, or 15
Power Supply Slots	1 (For P2-01AC or P2-01DCAC)
CPU Slots	1 (P2-550)
Module Types Supported	Discrete, analog and specialty
Module Placement Restrictions	None. Any I/O module may be installed in any I/O slot without power supply budget or module type restrictions.
I/O Module Hot Swap Support	Yes. (All discrete, analog and specialty modules can be software enabled for Hot Swap operation)
Module Keying	Electronic to slot
Maximum Number of Local Bases	1

Base Configuration

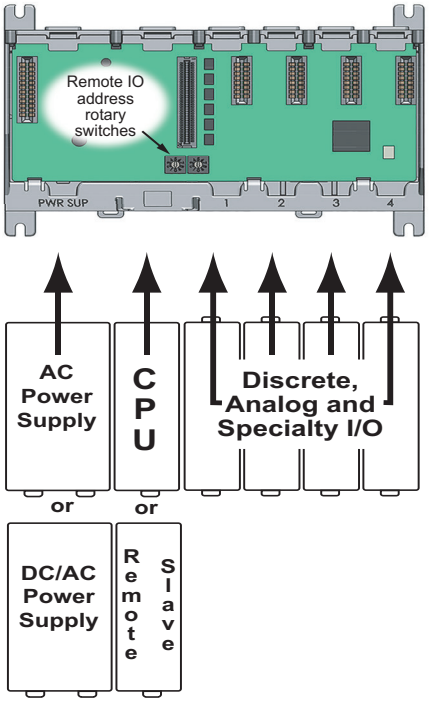

General Specifications

Operating Temperature	0° to 60°C (32° to 140°F)
Storage Temperature	-20° to 70°C (-4° to 158°F)
Humidity	5 to 95% (non-condensing)
Environmental Air	No corrosive gases permitted
Vibration	IEC60068-2-6 (Test Fc)
Shock	IEC60068-2-27 (Test Ea)
Heat Dissipation	3W
Weight	P2-04B: 204g (7.2 oz) P2-07B: 294g (10.4 oz) P2-11B: 430g (15.2 oz) P2-15B: 521g (18.4 oz)
Agency Approvals**	UL508 file E139594, Canada & USA CE (EN61131-2*)

*Meets EMC and Safety requirements. See the Declaration of Conformity for details.
**To obtain the most current agency approval information, see the Agency Approval Checklist section on the specific component part number web page.

Dimensions and Installation

It is important to review and understand the installation requirements for your Productivity2000 system. Your knowledge of these requirements will help ensure that your system operates within safe environmental and electrical limits.

Plan for Safety

This catalog should never be used as a replacement for the product inserts and user manual. Each base, CPU, power supply, I/O module, and specialty module comes with a product insert. You can purchase, download for free, or view online the Productivity2000 user manual (P2-USER-M). These documents, along with the software help files, contain important safety information that must be followed.

The system installation should comply with all appropriate electrical codes and standards.

Enclosures

Your selection of a proper enclosure is important to ensure safe and proper operation of your Productivity2000 system. Applications for the Productivity2000 system vary and may require additional hardware considerations. The minimum considerations for enclosures include:

- Conformance to electrical standards
- Protection from the elements in an industrial environment
- Common ground reference
- Maintenance of specified ambient temperature
- Access to the equipment
- Security or restricted access
- Sufficient space for proper installation and maintenance of the equipment

Mounting Position

Mount the bases horizontally, as shown in the illustration, to provide proper ventilation. Do not mount the bases vertically, upside down, or on a flat horizontal surface.

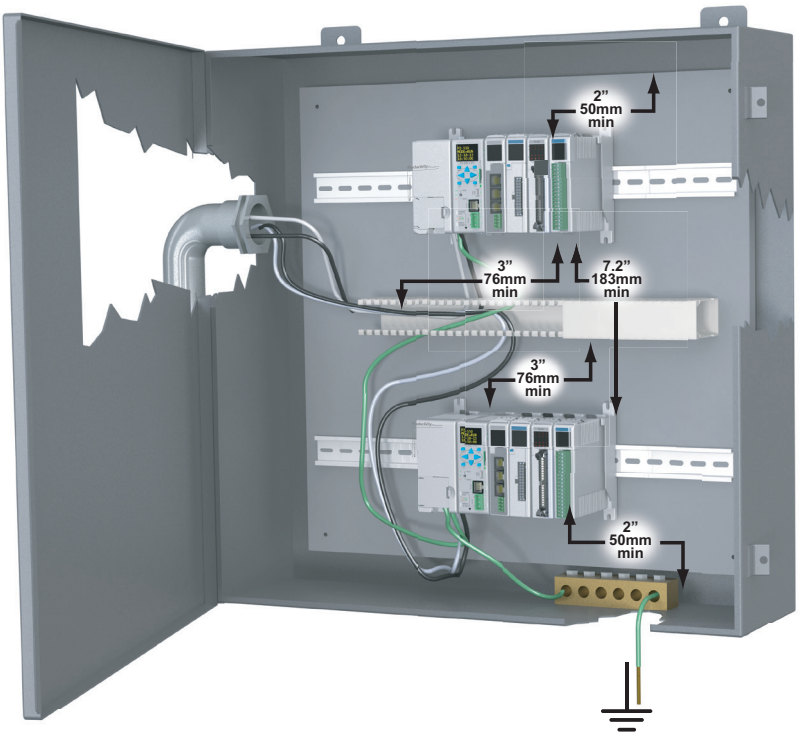

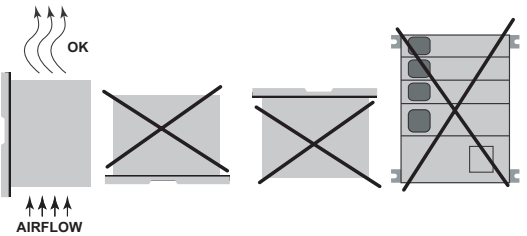

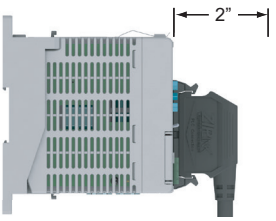

NOTE: Add 2" to mounting depth when using ***ZIP***Link cable.

Dimensions and Installation

Mounting Clearances

Provide a minimum clearance of 2 inches (50mm) between the bases and all sides of the enclosure. Allow extra door clearance for operator panels and other door mounted items. There should be a minimum of 3 inches (76mm) clearance between the base and any wire duct, and a minimum of 7.2 inches (183mm) from base to base in a multiple base installation.

Grounding

A good common ground reference (earth ground) is essential for proper operation of the Productivity2000 system. One side of all control circuits, power circuits and the ground lead must be properly connected to earth ground by either installing a ground rod in close proximity to the enclosure or by connecting to the incoming power system ground. There must be a single-point ground (i.e. copper bus bar) for all devices in the enclosure that require an earth ground.

Temperature Considerations

The Productivity2000 system should be installed in an environment operating within the equipment operating temperature specifications. If the temperature deviates above or below the specification, measures such as cooling or heating the enclosure should be taken to maintain the specification.

Power Considerations

The Productivity2000 system is designed to be powered by the 110/240 VAC Productivity2000 power supply. The Productivity2000 has achieved CE certification without requiring EMF/RFI line noise filters on the AC power supply. Please review the "EU Directives" document, located in the User Manual or at www.productivity2000.com, for applications which require CE Compliance.

Base Dimensions, inches[mm]

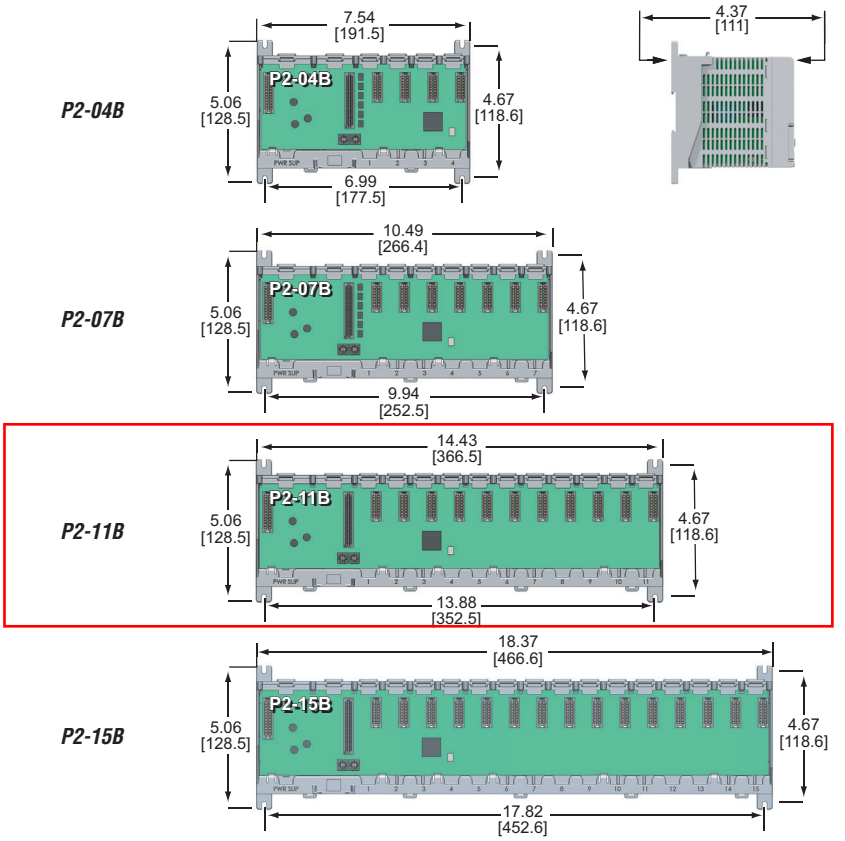

Base Installation

Using Mounting Rails

The Productivity2000 bases can be secured to the cabinet using mounting rails. Use rails that conform to DIN EN standard 50022. ADC offers a complete line of DIN rail, DINnectors and DIN rail mounted apparatus. The rails are approximately 35mm high, with a depth of 7.5 mm. When mounting the base on a rail, consider using end brackets on each side of the base. The end brackets keep the base from sliding horizontally along the rail. This minimizes the possibility of accidentally pulling the wiring loose.

Several retaining clips are located on the lower rear surface of the base of the base. To secure the base to a DIN rail, place the base onto the rail and gently push up on the retaining clips. The clips lock the base onto the rail.

To remove the base, pull down on the retaining clips, lightly pull forward from the bottom and rotate the base, pulling it away from the rail.

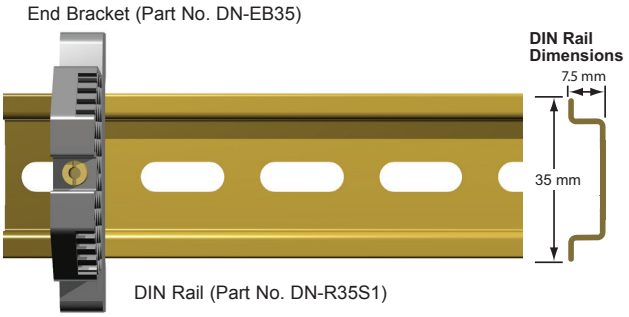

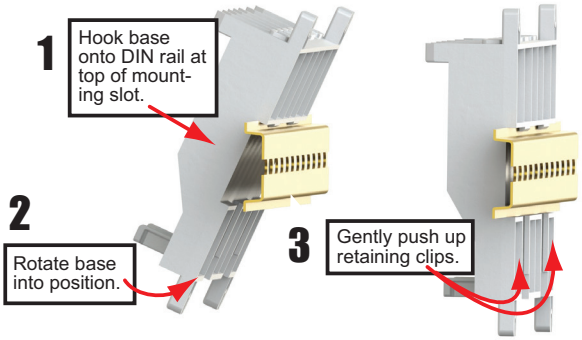

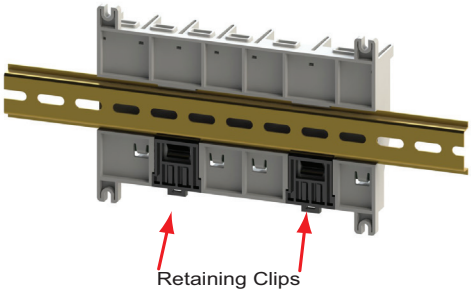

Prices as of April 27, 2016. Check Web site for most current prices.

Power Supplies

P2-01AC $69.00

The P2-01AC Input Power Supply provides isolated power to the Productivity2000 base from an external 100-240 VAC source.

No power budgeting is required. Any combination of I/O modules may be installed in any slots without power budget considerations.

AC Input Power Supply

P2-01AC Specifications

P2-01AC User Specifications	
Input Voltage Range (Tolerance)	100 to 240 VAC (-15% / +10%)
Rated Operating Frequency	50 to 60 Hz with ± 5% tolerance
Maximum Input Power	37.4 W
Cold Start Inrush Current	23.6 A
Maximum Inrush Current (Hot Start)	25.6 A
Input Fuse Protection (Internal)	Micro fuse 250V, 2A, Non-replaceable
Efficiency	75%
Output	24VDC, 0.85 A 3.3 VDC, 3.81 A
Maximum Output Power	29W Combined
Heat Dissipation	8.4 W
Isolated User 24VDC Output	None
Output Protection for Over Current, Over Voltage, and Over Temperature	Self resetting for both voltage outputs to base
Under Input Voltage Lock-out	55–65 VAC
Over Input Voltage Lock-out	265–280 VAC
Input Transient Protection	Varistor, plus input choke and filter
Operating Design Life	10 years at full load at 40°C ambient and 5 years at 60°C ambient

P2-01AC General Specifications	
Operating Temperature	0° to 60°C (32° to 140°F)
Storage Temperature	-20° to 70°C (-4° to 158°F)
Humidity	5 to 95% (non-condensing)
Environmental Air	No corrosive gases permitted
Vibration	IEC60068-2-6 (Test Fc)
Shock	IEC60068-2-27 (Test Ea)
Enclosure Type	Open Equipment
Voltage Withstand (dielectric)	2100 VDC applied for 2 seconds
Insulation Resistance	>10MΩ @ 500VDC
Module Location	Power Supply slot in a Productivity2000 System.
EU Directive	See the "EU Directive" topic in the Productivity Suite Help File. Information can also be obtained at: www.productivity2000.com
Weight	90g (3.2 oz)
Agency Approvals**	UL508 file E139594, Canada & USA CE (EN61131-2*)

*Meets EMC and Safety requirements. See the Declaration of Conformity for details.
**To obtain the most current agency approval information, see the Agency Approval Checklist section on the specific component part number web page.

IMPORTANT!

Hot-Swapping Information
NOTE: This device cannot be Hot Swapped.

Terminal Block Specifications	
Number of Positions	4 Screw Terminals
Wire Range	22–14 AWG (0.324 to 2.08 sq. mm) Solid Conductor 22–14 AWG (0.324 to 2.08 sq. mm) Stranded Conductor 3/64 inch (1.2 mm) insulation maximum
Screw Driver Width	1/4 inch (6.5 mm) maximum
Screw Size	M3 size
Screw Torque	7–9 inch-pounds (0.882 - 1.02 N·m)

Power Supply

Power Supply Installation

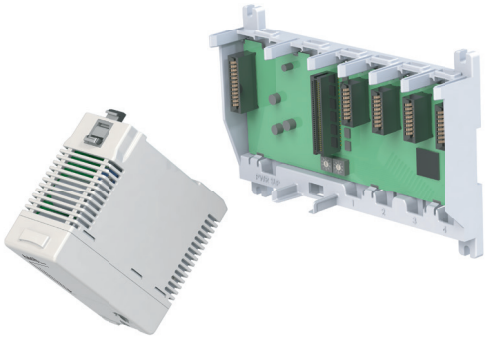

Step One:
Locate the left most socket in the base.

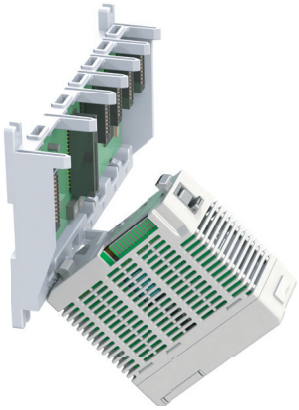

Step Two:
Insert the Power Supply at a 30° angle into the notch located at the bottom of the base and rotate up until seated in socket.

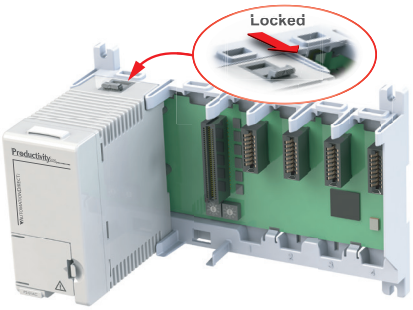

Step Three:
Snap the top retaining tab into the locked position.

Power Connections

P2-01AC

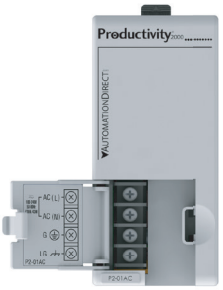

100-240 VAC

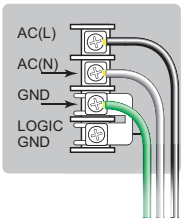

P2-01DCAC

12–24 VDC

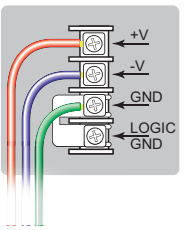

24VAC

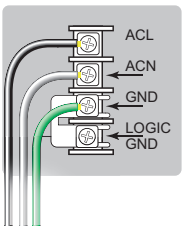

Grounding

A good common ground reference (earth ground) is essential for proper operation of the Productivity2000 system. One side of all control circuits, power circuits and the ground lead must be properly connected to earth ground by either installing a ground rod in close proximity to the enclosure or by connecting to the incoming power system ground. There must be a single-point ground (i.e. copper bus bar) for all devices in the enclosure that require an earth ground.

CPU Module

MODEL #: P2-550

P2-550 $255.00

The P2-550 is a high-performance CPU which has communications ports that support Ethernet and serial devices. The P2-550 also includes a 4-line x 10-character OLED local display and a USB programming port.

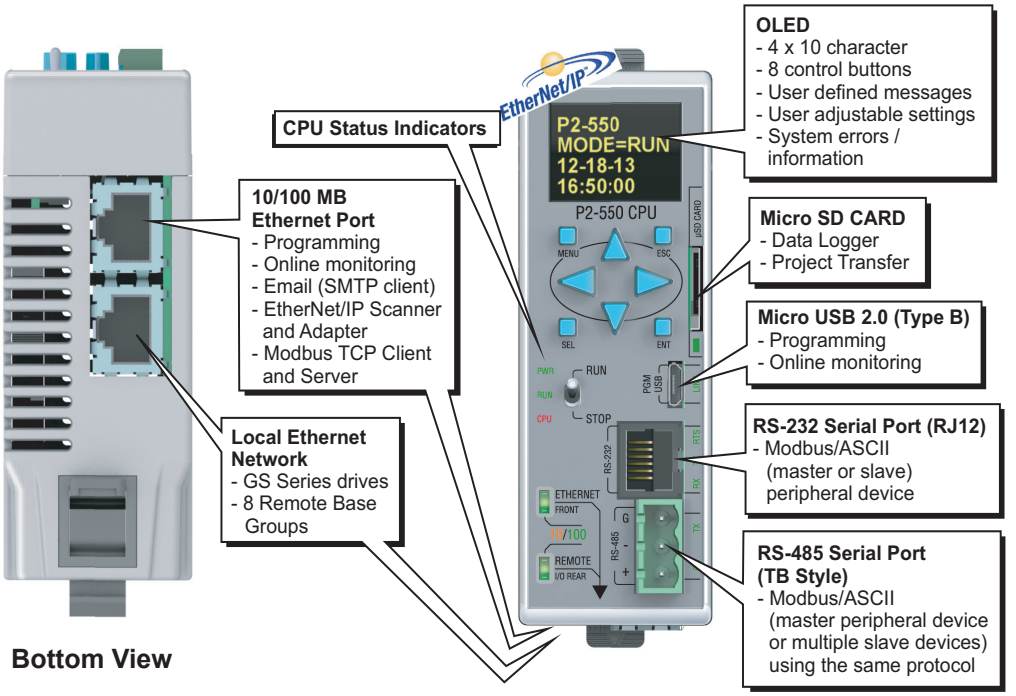

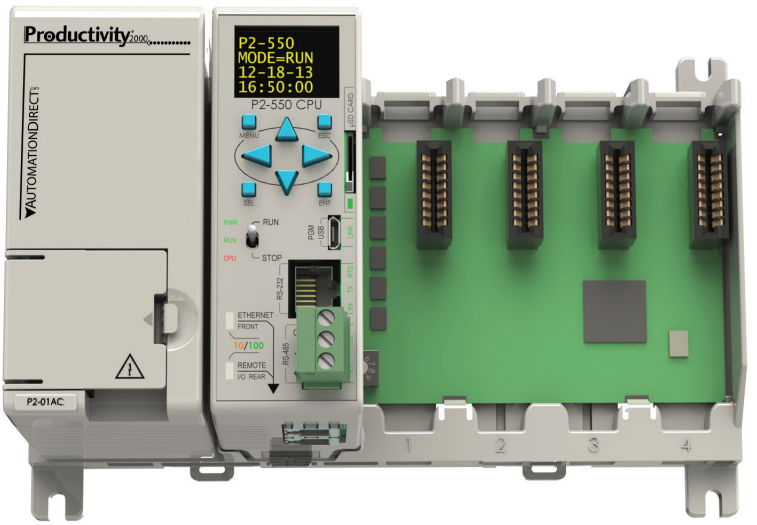

Each Productivity2000 system base requires a CPU module be mounted in the controller slot of the unit. The CPU stores and executes the user's program.

CPU Module

CPU Run/Stop Switch	
RUN position	Executes user program, run-time edits possible
STOP position	Does not execute user program, normal program load position

CPU Status Indicators	
PWR	Green LED is illuminated when power is ON
RUN	Green LED is illuminated when CPU is in RUN mode
CPU	Red LED is illuminated during power ON reset, power down, or watch-dog time-out.

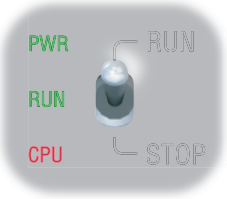

CPU Specifications		
User Memory	50MB (Includes program, data and documention)	
Memory Type	Flash and Battery Backed RAM	
Retentive Memory	500kB	
Scan Time	500µs (3K Boolean, 240 I/O)	
Display	OLED, 4x10 characters, 8 control buttons; OLED characters are 7x12 with a dot pitch of 0.245 mm; 1.72 mm x 2.94 mm	
Communications; 5 Integrated Ports	**USB IN:** Programming, Monitoring, Debug, Firmware **ETHERNET:** (10/100 Mbps Ethernet) Programming, Monitoring, Debug, Firmware, Email SMTP Client, Modbus TCP Client (32 Servers) and Server (16 Clients), EtherNet/IP Scanner (32 Adapters) and Adapter (4 scanners) with 8 connections per device. **REMOTE I/O:** 16 GS-EDRV100 (GS Drives), 8 Remote Base Groups **RS-232:** (RJ12, 1200–115.2k baud) ASCII, Modbus **RS-485:** Removable Terminal Included, (1200–115.2k baud) ASCII, Modbus RTU	
Data Logging/Project Transfer	Micro SD card slot	
Hardware Limits of System	**240 Hardware I/O Points:** All 16-point I/O Modules **16 GS Series Drives** as Local Network I/O **8 Remote Base Groups**	
Instruction Types	Application Functions Array Functions Counters/Timers Communications Data Handling Drum Sequencers Math Functions	PID Program Control String Functions System Functions Contacts Coils
Real Time Clock Accuracy	±5s per day typical at 25°C -15s per day maximum at 60°C	

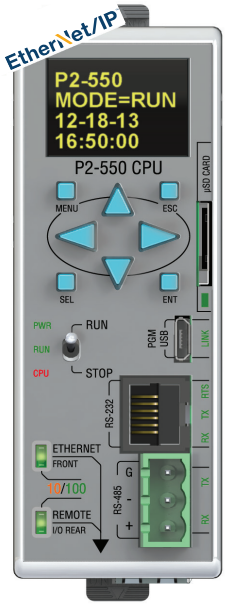

IMPORTANT!

Hot-Swapping Information
NOTE: This device cannot be Hot Swapped.

CPU Module

Specifications

General Specifications	
Operating Temperature	0° to 60°C (32° to 140°F)
Storage Temperature	-20° to 70°C (-4° to 158°F)
Humidity	5 to 95% (non-condensing)
Environmental Air	No corrosive gases permitted
Vibration	IEC60068-2-6 (Test Fc)
Shock	IEC60068-2-27 (Test Ea)
Heat Dissipation	3.81 W
Enclosure Type	Open Equipment
Module Location	Controller slot in the local base in a Productivity2000 System.
EU Directive	See the "EU Directive" topic in the Productivity Suite Help File. Information can also be obtained at: www.productivity2000.com
Weight	158g (5.6 oz)
Agency Approvals**	UL508 file E139594, Canada & USA CE (EN61131-2)*

*Meets EMC and Safety requirements. See the Declaration of Conformity for details.
**To obtain the most current agency approval information, see the Agency Approval Checklist section on the specific component part number web page.

CPU Installation

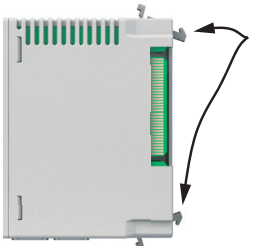

Step One:
Unlock both locking tabs

WARNING: Do not apply field power until the following steps are completed. .

Step Two:
Seat CPU on support platform and push towards base until circuit board is fully engaged into connector

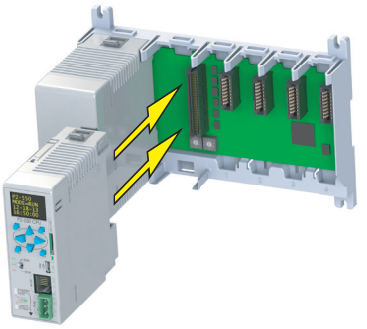

Step Three:
Snap retaining tab into the locked position.

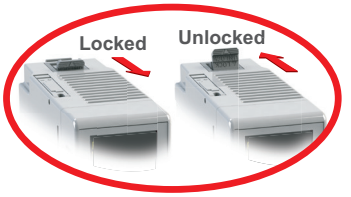

WARNING: Explosion hazard – Do not connect or disconnect or operate switches while circuit is live unless the area is known to be non-hazardous. Do not hot-swap modules unless the area is known to be non-hazardous.

OLED Message Display

The P2-550 CPU incorporates a 4-line by 10-character OLED (Organic Light-Emitting Diode) display for system alarms, information and for displaying user-defined messages. OLED characters are 7x12 (1.72 mm x 2.94 mm) with a dot pitch of 0.245 mm.

Control buttons located beneath the OLED display allow the user to navigate through menu items. These buttons also permit local configuration of time and date settings.

User defined display messages may be configured using the Productivity Suite Programming Software. A "Display Page" dialog box allows the user to program text into user-defined tags that will be displayed based on the programmed ladder execution.

OLED Control Buttons	
Menu Button	Access the OLED menu
ESC Button	Returns to the previous screen
SEL Button	Selects the desired menu option
ENT Button	Starts the selected process
Directional Arrows	Moves the cursor around the 4 Row x 10 Column OLED

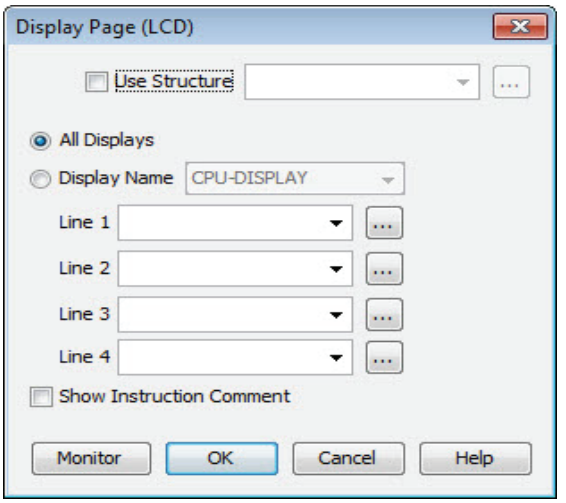

CPU Module

D2-BAT-1 $13.00

Battery (Replacement)

A battery is included with the P2-550 CPU module, but is not installed. The battery can be installed to retain the Time and Date along with any Tagname values that are set up as retentive.

The battery is not needed for program backup.

Battery (Optional)	
D2-BAT-1	Coin type, 3.0 V Lithium battery, 560mA, battery number CR2354

Note: Although not needed for program backup, a battery is included with the P2-550. Install this battery if you want the CPU to retain the Time and Date along with any Tagname values that you have set up as retentive.

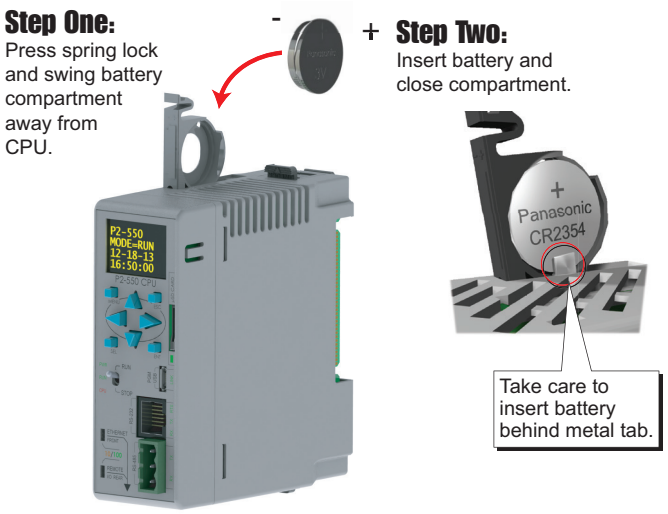

MICSD-16G $25.50

Micro SD Card

Used for data logging or project transfers.

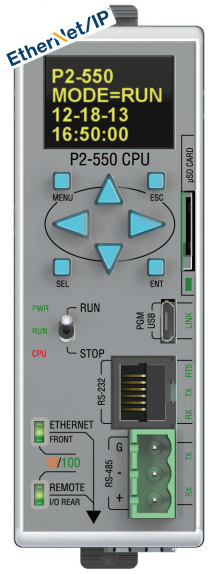

Micro SD Specifications				
Port Name	MICRO SD			
Description	Standard Micro SD socket for data logging or program transfer			
Maximum Card Capacity	32GB			
Transfer Rate (ADATA microSDHC Class 4 memory card)	Mbps	Minimum	Typical	Maximum
	Read	14.3	14.4	14.6
	Write	4.8	4.9	5.1
Port Status LED	Green LED is illuminated when card is inserted/ detected			

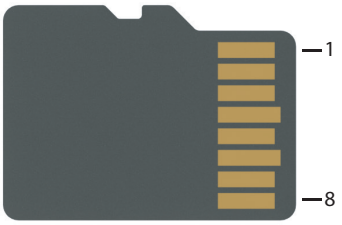

Pin	SD
1	DAT2
2	CD/DAT3
3	CMD
4	VDD
5	CLK
6	VSS
7	DAT0
8	DAT1

Note: Card not included with unit.

CPU Module

Port Specifications

P2-550

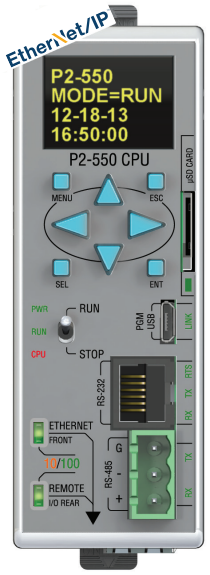

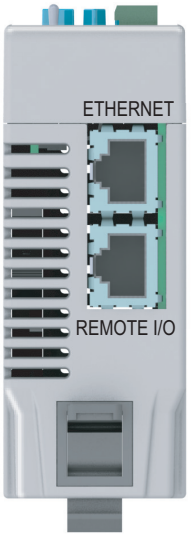

P2-550 Bottom View

Ethernet Port (On bottom of CPU)

RJ-45 style connector used for:

- Connection to a PC running the ProductivitySuite programming software
- Modbus TCP Client connections (Modbus requests sent from the CPU)
- Modbus TCP Server connections (Modbus requests received by the CPU)
- EtherNet/IP Scanner (32 Adaptors)
- EtherNet/IP Adapter (4 scanners) with 8 connections per device.
- Outgoing E-mail

Remote I/O Port (On bottom of CPU)

RJ-45 style connector used for connecting to a Remote I/O network consisting of GS-EDRV100 units connected to GS drives.

Ethernet Specifications

Port Name	ETHERNET	REMOTE I/O
Description	Standard transformer isolated Ethernet port with built-in surge protection for programming, online monitoring, Email (SMTP client), Modbus/TCP client/server connections (fixed IP or DHCP) and EtherNet/IP client/server connections.	Standard transformer isolated Ethernet port with built-in surge protection for connection to 16 GS Series Drives.
Transfer Rate	10Mbps (Orange LED) and 100Mbps (Green LED) [Auto-MDIX (cross-over)].	
Port Status LED	LED is solid when network LINK is established. LED flashes when port is active (ACT).	

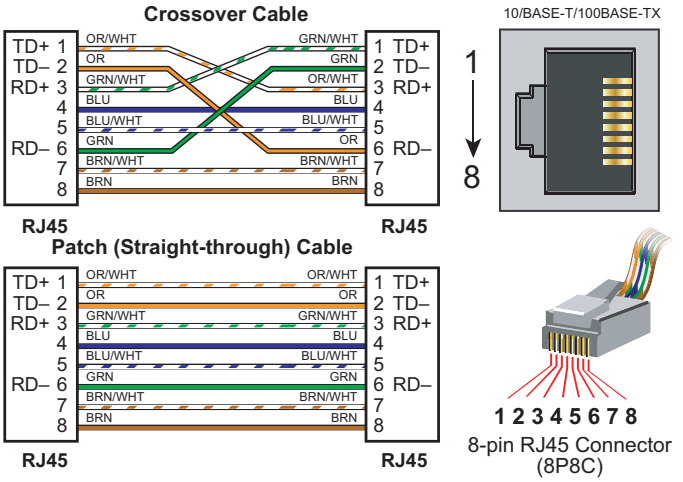

CPU Module

Port Specifications

P2-550

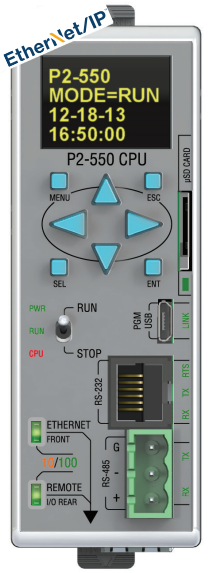

MICRO USB Programming Port

Used exclusively for connecting to a PC running the Productivity Suite programming software.

Micro USB Input Specifications	
Port Name	MICRO USB
Description	Standard Micro USB Slave input for programming and on-line monitoring, with built-in surge protection. Not compatible with older full speed USB devices.
Transfer Rate	480 Mbps
Port Status LED	Green LED is illuminated when LINK is established to programming software.
Cables	USB Type A to Micro USB Type B: 6ft cable part # USB-CBL-AMICB6 15ft cable part # USB-CBL-AMICB15

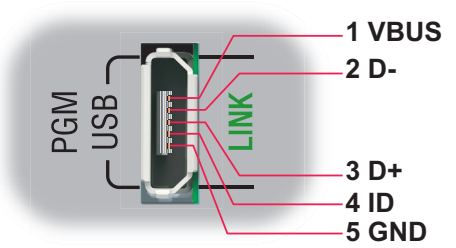

CPU Module

P2-550

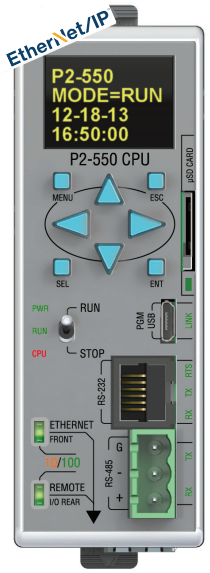

RS-232 Port

RJ-12 style connector used for:

- Modbus RTU Master connections
- Modbus RTU Slave connections
- ASCII full or half duplex communications
- Custom Protocol Incoming and Outgoing communications

RS-232 Specifications

Port Name	RS-232
Description	Non-isolated RS-232 DTE port connects the CPU as a Modbus/ASCII master or slave to a peripheral device. Includes ESD and built-in surge protection
Data Rates	Selectable,1200, 2400, 4800, 9600, 19200, 33600, 38400, 57600, and 115200 baud
+5V Cable Power Source	210mA maximum at 5V, ±5%. Reverse polarity and overload protected
TXD	RS-232 Transmit output
RXD	RS-232 Receive input
RTS	Handshaking output for modem control
GND	Logic ground
Maximum Output Load (TXD/RTS)	3kΩ, 1000pf
Minimum Output Voltage Swing	±5V
Output Short Circuit Protection	±15mA
Port Status LED	Green LED is illuminated when active for TXD, RXD and RTS
Cable Options	EA-MG-PGM-CBL D2-DSCBL USB-RS232 with D2-DSCBL FA-CABKIT FA-ISOCON for converting RS-232 to isolated RS-485

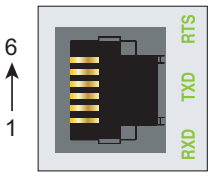

6-pin RJ12 Female Modular Connector

Pin #	Signal	
6	GND	Logic Ground
5	RTS	RS-232 Output
4	TXD	RS-232 Output
3	RXD	RS-232 Input
2	+5V	210mA Maximum
1	GND	Logic Ground

CPU Module

P2-550

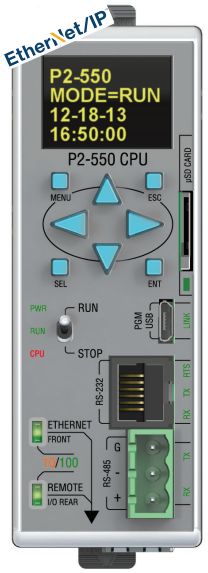

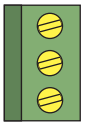

Removable connector included. Spare connectors available (part no. P3-RS485CON).

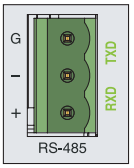

Pin #	Signal
G	GND
–	TXD-/RXD-
+	TXD+/RXD+

RS-485 Port

A 3-pin removable terminal block used for:

- Modbus RTU Master connections
- Modbus RTU Slave connections
- ASCII Incoming and Outgoing communications
- Custom Protocol Incoming and Outgoing communications

RS-485 Port Specifications

Port Name	RS-485
Description	Non-isolated RS-485 port connects the CPU as a Modbus/ASCII master or slave to a peripheral device. Includes ESD/EFT protection and automatic echo cancellation when transmitter is active
Data Rates	Selectable, 1200, 2400, 4800, 9600, 19200, 33600, 38400, 57600, and 115200
TXD+/RXD+	RS-485 transceiver high
TXD-/RXD-	RS-485 transceiver low
GND	Logic ground
Input Impedance	19kΩ
Maximum Load	50 transceivers, 19kΩ each, 60Ω termination
Output Short Circuit Protection	±250mA, thermal shut-down protection
Electrostatic Discharge Protection	±8kV per IEC1000-4-2
Electrical Fast Transient Protection	±2kV per IEC1000-4-4
Minimum Differential Output Voltage	1.5 V with 60Ω load
Fail Safe Inputs	Logic high input state if inputs are unconnected
Maximum Common Mode Voltage	-7.5 V to 12.5 V
Port Status LED	Green LED illuminated when active for TXD and RXD
Cable Options	Recommend L19827-XXX from AutomationDirect.com

Removable Terminal Block Specifications

Part Number	P3-RS485CON
Number of Positions	3 Screw Terminals
Pitch	5mm
Wire Range	28–12 AWG Solid Conductor 30–12 AWG Stranded Conductor
Screw Driver Width	1/8 inch (3.175 mm) Maximum
Screw Size	M2.5
Screw Torque	4.5 lb·in (0.51 N·m)

DC Input Modules

MODEL #: P2-16ND3

P2-16ND3 $69.00

Discrete Input

The P2–16ND3 DC Input Module provides sixteen 12–24 VDC sinking/sourcing inputs.

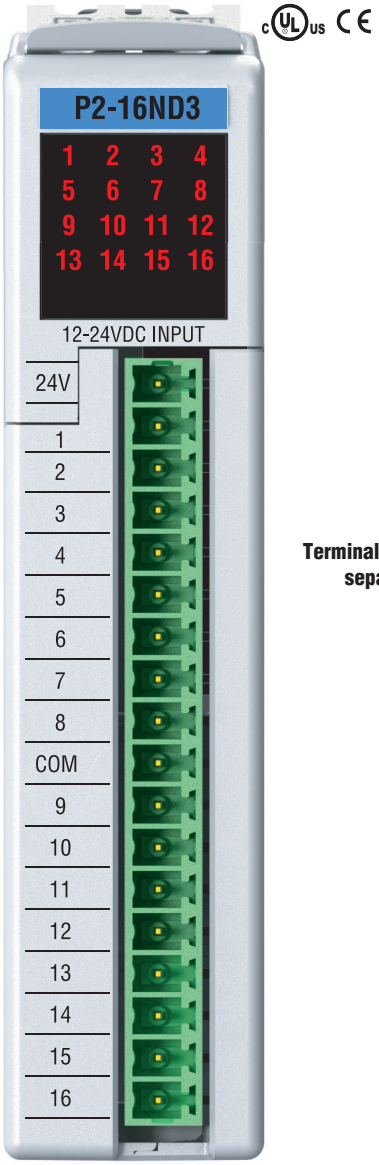

Terminal blocks sold separately.

Input Specifications

Inputs per Module	16 (Sink/Source)
External 24VDC Power Required*	24VDC (-20% / +25%), 100mA
Input Voltage Range	12–24 VDC (±10%) ≤ External Voltage
Peak Voltage Range	26.4 VDC
Input Current (typical)	2.5 mA @ 12VDC 5mA @ 24VDC
Maximum Input Current	6mA @ 60°C (26.4 VDC)
Input Impedance	4.7kΩ @ 24VDC
ON Voltage Level*	≤4VDC sourcing ≥12.5 VDC sinking
OFF Voltage Level	>6VDC sourcing <8.5 VDC sinking
Minimum ON Current	2mA
Maximum OFF Current	1.5 mA
OFF to ON Response	Max. 2ms Typical 1ms
ON to OFF Response	Max. 2ms Typical 1ms
Status Indicators	Logic side (16 points)
Commons per Module	1 Isolated (16 points/common)

*External 24VDC is required for the module to operate and cannot drop below the channel input voltage:

External Supply Voltage	On Voltage Level
19.2 VDC	>9.0 VDC
24.0 VDC	>11.3 VDC
26.4 VDC	>12.5 VDC

General Specifications

Surrounding Air Temperature	0° to 60°C (32° to 140°F)
Storage Temperature	-20° to 70°C (-4° to 158°F)
Humidity	5 to 95% (non-condensing)
Environmental Air	No corrosive gases permitted
Vibration	IEC60068-2-6 (Test Fc)
Shock	IEC60068-2-27 (Test Ea)
Field to Logic Side Isolation	1800VAC applied for 1 second
Insulation Resistance	>10MΩ @ 500VDC
Heat Dissipation	3.5 W
Enclosure Type	Open Equipment
Module Keying to Backplane	Electronic
Module Location	Any I/O slot in a Productivity2000 System.
Field Wiring	Use ***ZIP***Link Wiring System or removable terminal block (not included). See Wiring Solutions.
EU Directive	See the "EU Directive" topic in the Productivity Suite Help File. Information can also be obtained at: www.productivity2000.com
Weight	100g (3.5 oz)
Agency Approvals**	UL508 file E139594, Canada & USA CE (EN61131-2*)

*Meets EMC and Safety requirements. See the Declaration of Conformity for details.
**To obtain the most current agency approval information, see the Agency Approval Checklist section on the specific component part number web page.

CPU	Firmware	Productivity Suite
P2-550	Version 1.2.1.16 or later	Version 2.1.x.x or later

We recommend using pre-wired ***ZIP***Link cables and connection modules. See Wiring Solutions.

If you wish to hand-wire your module, removable terminal blocks are sold separately. Order part number P2-RTB or P2-RTB-1

DC Input Modules

P2-16ND3 (cont'd)

Removable Terminal Block Specifications		
Part Number	**P2-RTB**	**P2-RTB-1**
Number of Positions	18 Screw Terminals	18 Spring Clamp Terminals
Wire Range	30–16 AWG (0.051–1.31 mm²) Solid / Stranded Conductor 3/64 in (1.2 mm) Insulation Maximum 1/4 in (6–7 mm) Strip Length	28–16 AWG (0.081–1.31 mm²) Solid / Stranded Conductor 3/64 in (1.2 mm) Insulation Maximum 19/64 in (7–8 mm) Strip Length
Conductors	"USE COPPER CONDUCTORS, 75°C" or Equivalent.	
Screw Driver Width	1/8 inch (3.8 mm) Maximum	
Screw Size	M2	N/A
Screw Torque	2.5 lb·in (0.28 N·m)	N/A

Wiring Diagrams

Dual Supply Sinking

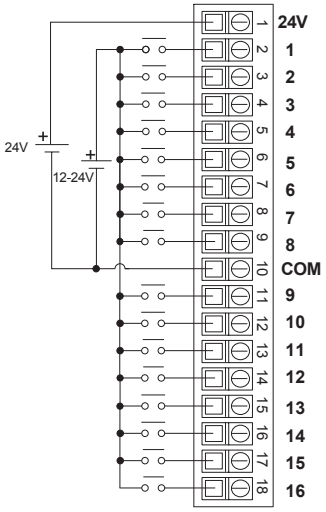

Single Supply Sourcing

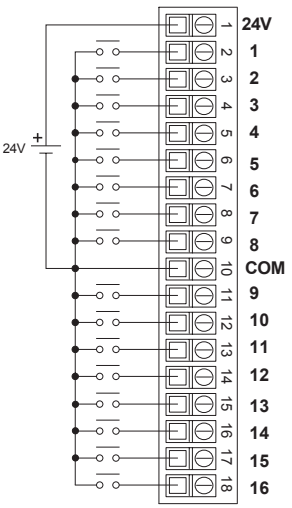

Single Supply Sinking

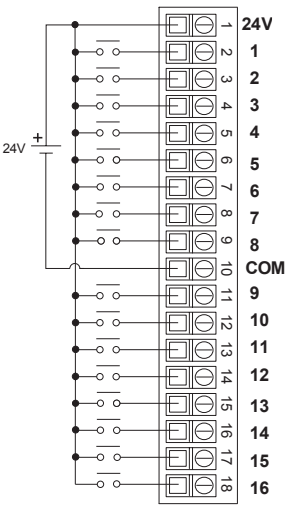

Single Supply Sinking and Sourcing

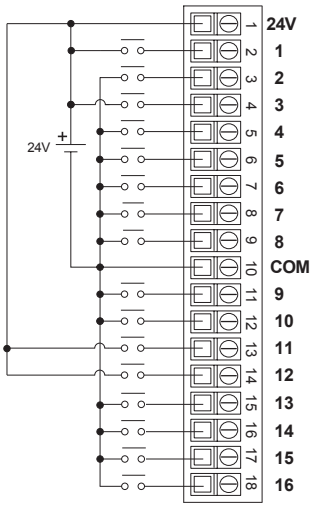

1,3, 11, & 12 Sinking Inputs
Remaining are Sourcing Inputs

Equivalent Input Circuit

Single Source

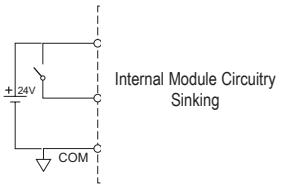

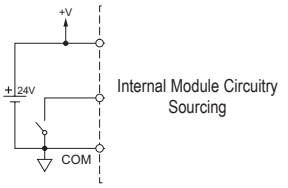

Dual Source

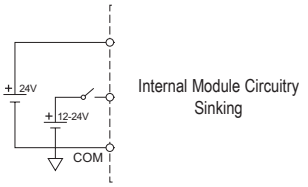

Wiring I/O Modules

There are two available methods for wiring most I/O modules: The ***ZIP***Link wiring system or hand wiring to the optional removable I/O module terminal blocks.

Note: Thermocouple and RTD modules are not compatible with the ***ZIP***Link system and are shipped with the optional terminal blocks included.

*ZIP*Links Wiring Systems

For wiring I/O modules, we strongly recommend using pre-wired ***ZIP***Links wiring systems, which eliminate the need for hand wiring modules to terminal blocks.

See the selection matrix guide on the following pages.

***ZIP*Link Pre-Wired Terminal Block Cable**

***ZIP*Link Pigtail Cable**

***ZIP*Link Module**

Removable Terminal Blocks

For most I/O modules you can also purchase a removable terminal block (part no. P2-RTB or P2-RTB-1).

Note: P2-RTB supplied with Thermocouple and RTD modules.

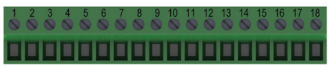

Removable Terminal Block P2-RTB

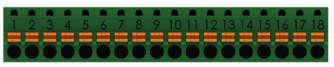

Removable Terminal Block P2-RTB-1

Terminal Block Removal

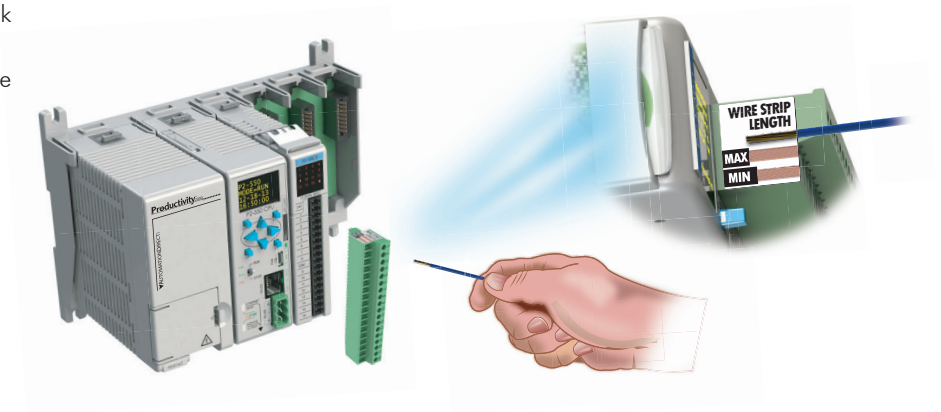

Wiring Solutions

Wiring Solutions using the *ZIP*Link Wiring System

ZIPLinks eliminate the normally tedious process of wiring between devices by utilizing prewired cables and DIN rail mount connector modules. It's as simple as plugging in a cable connector at either end and terminating wires at only one end. Prewired cables keep installation clean and efficient, using half the space at a fraction of the cost of standard terminal blocks. There are several wiring solutions available when using the ***ZIP***Link System ranging from CPU I/O-to-***ZIP***Link Connector Modules that are ready for field termination, options for connecting to third party devices, GS Series, DuraPulse and SureServo Drives, and specialty relay, transorb and communications modules. Pre-printed I/O-specific adhesive label strips for quick marking of ***ZIP***Link modules are provided with ***ZIP***Link cables. See the following solutions to help determine the best ***ZIP***Link system for your application.

Solution 1: DirectLOGIC, CLICK, Productivity2000 and Productivity3000 I/O Modules to *ZIP*Link Connector Modules

When looking for quick and easy I/O-to-field termination, a ***ZIP***Link connector module used in conjunction with a prewired ***ZIP***Link cable, consisting of an I/O terminal block at one end and a multi-pin connector at the other end, is the best solution.

Use the CPU I/O Modules to ***ZIP***Link Connector Modules selector tables located in the ***ZIP***Link Wiring Solutions section to:

1. Locate your I/O module/CPU,
2. Select a ***ZIP***Link Module, and
3. Select a corresponding ***ZIP***Link Cable.

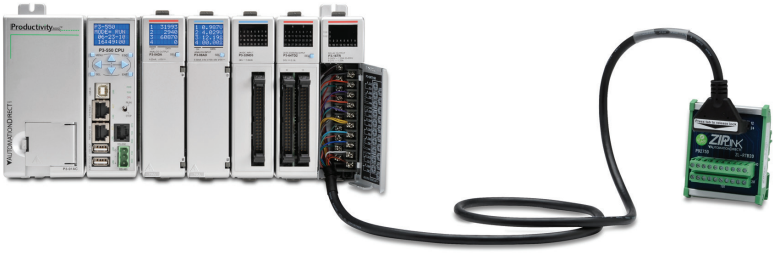

Solution 2: *Direct*LOGIC, CLICK, Productivity2000 and Productivity3000 I/O Modules to 3rd Party Devices

When wanting to connect I/O to another device within close proximity of the I/O modules, no extra terminal blocks are necessary when using the ***ZIP***Link Pigtail Cables. ***ZIP***Link Pigtail Cables are prewired to an I/O terminal block with color-coded pigtail with soldered-tip wires on the other end.

Use the I/O Modules to 3rd Party Devices selector tables located in the ***ZIP***Link Wiring Solutions section to:

1. Locate your CPU I/O module, and
2. Select a ***ZIP***Link Pigtail Cable that is compatible with your 3rd party device.

Solution 3: GS Series and DuraPulse Drives Communication Cables

Need to communicate via Modbus RTU to a drive or a network of drives?

ZIPLink cables are available in a wide range of configurations for connecting to CPUs, *SureServo*, *Sure*Step, Stellar Soft Starter and AC drives. Add a ***ZIP***Link communications module to quickly and easily set up a multi-device network.

Use the Drives Communication selector tables located in the ***ZIP***Link Wiring Solutions section to:

1. Locate your Drive and type of communications, and
2. Select a ***ZIP***Link cable and other associated hardware.

Wiring Solutions

Solution 4: Serial Communications Cables

ZIPLink offers communications cables for use with ***Direct***LOGIC, CLICK, Productivity2000 and Productivity3000 CPUs, that can also be used with other communications devices. Connections include a 6-pin RJ12 or 9-pin, 15-pin and 25-pin D-Sub connectors which can be used in conjunction with the RJ12 or D-Sub Feedthrough modules.

Using the Serial Communications Cables selector table located in the ***ZIP***Link Wiring Solutions section,

1. Locate your connector type
2. Select a cable.

Solution 5: Specialty *ZIP*Link Modules

For additional application solutions, ***ZIP***Link Specialty Modules are available in a variety of configurations including stand-alone relays, 24VDC and 120VAC transorb modules, D-Sub and RJ12 feedthrough modules, communication port adapter and distribution modules, and SureServo 50-pin I/O interface connection.

Using the ***ZIP***Link Specialty Modules selector table located in the ***ZIP***Link Wiring Solutions section:

1. Locate the type of application.
2. Select a ***ZIP***Link module.

Solution 6: *ZIP*Link Connector Modules to 3rd Party Devices

If you need a way to connect your device to terminal blocks without all that wiring time, then our pigtail cables with color-coded soldered-tip wires are a good solution. Used in conjunction with any compatible ***ZIP***Link Connector Modules, a pigtail cable keeps wiring clean and easy and reduces troubleshooting time.

Use the Universal Connector Modules and Pigtail Cables table located in the ***ZIP***Link Wiring Solutions section to:

1. Select module type,
2. Select the number of pins,
3. Select cable.

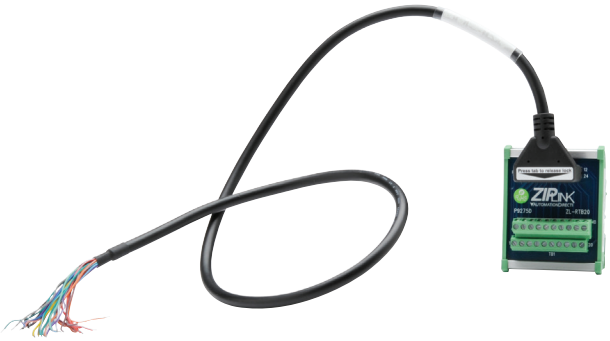

CPU I/O Modules to *ZIP*Link Connector Modules - Productivity2000

Discrete Input Modules

Productivity2000 Input Module *ZIP*Link Selector				
I/O Input Module	*ZIP*Link			
	# of Terms	Component	Part No.	Cable Part No.
P2-08ND3	18	Feedthrough	ZL-RTB20 (-1)	ZL-P2-CBL18 *
P2-16ND3		Sensor/LED	ZL-LTB16-24-1	
P2-08NE3		Feedthrough	ZL-RTB20 (-1)	
P2-16NE3		Sensor/LED	ZL-LTB16-24-1	
P2-32ND3	40	Feedthrough	ZL-RTB40 (-1)	ZL-CBL40 *
		Sensor/LED	ZL-LTB32-24-1	
P2-32NE3	40	Feedthrough	ZL-RTB40 (-1)	
		Sensor/LED	ZL-LTB32-24-1	
P2-08NAS	8	Feedthrough	ZL-RTB20 (-1)	ZL-P2-CBL18 *
P2-16NA	18			

Specialty Modules

Productivity2000 Specialty & Motion Modules *ZIP*Link Selector				
I/O Module	*ZIP*Link			
	# of Terms	Component	Part No.	Cable Part No.
P2-HSI	40	Feedthrough	ZL-RTB40 (-1)	ZL-CBL40 *S
P2-HSO				
P2-08SIM	See Note 1			
P2-SCM				

Discrete Output Modules

Productivity2000 Output Module *ZIP*Link Selector				
I/O Output Module	*ZIP*Link			
	# of Terms	Component	Part No.	Cable Part No.
P2-08TD1S	8	Feedthrough	ZL-RTB20 (-1)	ZL-P2-CBL18 *
P2-08TD2S	8			
P2-15TD1	15			
P2-15TD2	15			
P2-08TD1P	18			
P2-08TD2P	18			
P2-08TRS	18			
P2-08TAS	18			
P2-16TA	18	Feedthrough	ZL-RTB20 (-1)	
		Fuse	ZL-RFU20 [2]	
P2-16TD1P	18	Feedthrough	ZL-RTB20 (-1)	
		Relay (Sourcing)	ZL-RRL16-24-1 ZL-RRL16W-24-1 ZL-RRL16F-24-1 ZL-RRL16HDF-24-1	
P2-16TD2P	18	Feedthrough	ZL-RTB20 (-1)	
		Relay (Sinking)	ZL-RRL16-24-2 ZL-RRL16W-24-2 ZL-RRL16F-24-2 ZL-RRL16HDF-24-2	
P2-32TD1P	32	Feedthrough	ZL-RTB40 (-1)	ZL-CBL40 *
P2-32TD2P	32			
P2-16TR	18	Feedthrough	ZL-RTB20 (-1)	ZL-P2-CBL18 *
		Fuse	ZL-RFU20 [2]	

** Select the cable length by replacing the * with: Blank = 0.5 m, -1 = 1.0 m, or -2 = 2.0 m.*

[1] *These modules are not supported by the **ZIP**Link wiring system*

[2] *Note: Fuses (5 x 20 mm) are not included. See Edison Electronic Fuse section for (5 x 20 mm) fuse. S500 and GMA electronic circuit protection for fast-acting maximum protection. S506 and GMC electronic circuit protection for time-delay performance. Ideal for inductive circuits.*
*To ensure proper operation, do not exceed the voltage and current rating of **ZIP**Link module. ZL-RFU20 = 2A per circuit; ZL-RFU40 = 400 mA per circuit.*

CPU I/O Modules to *ZIP*Link Connector Modules - Productivity2000

Analog Input Modules

Productivity2000 Analog Input Module *ZIP*Link Selector				
I/O Analog Module	*ZIP*Link			
	# of Terms	Component	Part No.	Cable Part No.
P2-04AD	18	Feedthrough	ZL-RTB20 (-1)	ZL-P2-CBL18 *
P2-08AD-1				
P2-08AD-2				
P2-08ADL-1				
P2-08ADL-2				
P2-16AD-1	24			ZL-P2-CBL24 *
P2-16AD-2				
P2-16ADL-1				
P2-16ADL-2				
P2-06RTD	Matched Only	See Note 1		
P2-08THM	T/C Wire Only	See Note 1		
P2-08NTC	Copper Conductors	See Note 1		

** Select the cable length by replacing the * with: Blank = 0.5 m, -1 = 1.0 m, or -2 = 2.0 m.*

[1] *These modules are not supported by the ZIP*Link *wiring system.*

Analog Output Modules

Productivity2000 Analog Output Module *ZIP*Link Selector				
I/O Analog Module	*ZIP*Link			
	# of Terms	Component	Part No.	Cable Part No.
P2-04DA	18	Feedthrough	ZL-RTB20 (-1)	ZL-P2-CBL18 *
P2-04DAL-1				
P2-04DAL-2				
P2-08DA-1				
P2-08DA-2				
P2-08DAL-1				
P2-08DAL-2				
P2-16DA-1	24			ZL-P2-CBL24 *
P2-16DA-2				
P2-16DAL-1				
P2-16DAL-2				
P2-8AD4DA-1	18			ZL-P2-CBL18 *
P2-8AD4DA-2				

I/O Modules

A variety of discrete, analog and specialty I/O modules are available for use in a Productivity2000 System. Specifications for each module are on the following pages.

A filler module is available for unused I/O module slots (part number P2-FILL).

Discrete Input Modules

Productivity2000 Discrete Input Modules			
Part Number	Number of Inputs	Description	Price
P2-08SIM	8	Input Simulator Module	$47.00
P2-08ND3	8	Sinking/Sourcing 12–24 VDC	$46.00
P2-08NE3	8	Sinking/Sourcing 24V AC/DC	$40.00
P2-16ND3	16	Sinking/Sourcing 12–24 VDC	$69.00
P2-16NE3	16	Sinking/Sourcing 24V AC/DC	$69.00
P2-32ND3	32	Sinking/Sourcing 24 VDC	$99.00
P2-32NE3	32	Sinking/Sourcing 24V AC/DC	$99.00
P2-08NAS	8	AC Isolated 100-120 VAC	$77.00
P2-16NA	16	AC 100-240 VAC	$105.00

Analog Input Modules

Productivity2000 Analog Input Modules			
Part Number	Number of Channels	Description	Price
P2-04AD	4	Analog Input (Voltage/Current)	$195.00
P2-08AD-1	8	Analog Input (Current)	$199.00
P2-08AD-2	8	Analog Input (Voltage)	$219.00
*P2-08ADL-1**	8	Analog Input (Current)	$143.00
*P2-08ADL-2**	8	Analog Input (Voltage)	$157.50
P2-16AD-1	16	Analog Input (Current)	$249.00
P2-16AD-2	16	Analog Input (Voltage)	$275.00
*P2-16ADL-1**	16	Analog Input (Current)	$178.00
*P2-16ADL-2**	16	Analog Input (Voltage)	$196.00
P2-06RTD	6	Analog RTD Input	$325.00
P2-08THM	8	Analog Thermocouple Input	$329.00
P2-08NTC	8	Analog Thermistor Input	$265.00

Analog Output Modules

Productivity2000 Analog Output Modules			
Part Number	Number of Channels	Description	Price
P2-04DA	4	Analog Output (Voltage/Current)	$194.00
*P2-04DAL-1**	4	Analog Output (Current)	$110.00
*P2-04DAL-2**	4	Analog Output (Voltage)	$101.00
P2-08DA-1	8	Analog Output (Current)	$269.00
P2-08DA-2	8	Analog Output (Voltage)	$249.00
*P2-08DAL-1**	8	Analog Output (Current)	$202.00
*P2-08DAL-2**	8	Analog Output (Voltage)	$195.50
P2-16DA-1	16	Analog Output (Current)	$354.00
P2-16DA-2	16	Analog Output (Voltage)	$339.00
*P2-16DAL-1**	16	Analog Output (Current)	$253.00
*P2-16DAL-2**	16	Analog Output (Voltage)	$243.00

* Low resolution analog modules without OLED display.

Discrete Output Modules

Productivity2000 Discrete Output Modules			
Part Number	Number of Outputs	Description	Price
P2-08TD1S	8	Isolated Sinking	$47.00
P2-08TD2S	8	Isolated Sourcing	$47.00
P2-15TD1	15	Sinking	$65.00
P2-15TD2	15	Sourcing	$65.00
P2-08TD1P	8	Sinking Protected	$41.00
P2-08TD2P	8	Sourcing Protected	$41.00
P2-16TD1P	16	Sinking Protected	$69.00
P2-16TD2P	16	Sourcing Protected	$69.00
P2-32TD1P	32	Sinking Protected	$99.00
P2-32TD2P	32	Sourcing Protected	$99.00
P2-08TAS	8	Isolated AC	$105.00
P2-16TA	16	100-240 VAC Output	$129.00
P2-08TRS	8	Isolated Relay	$51.00
P2-16TR	16	Relay	$95.00

Productivity2000 Analog Input/Output Modules			
Part Number	Number of Channels	Description	Price
P2-8AD4DA-1	8/4	Analog Input/Output (Current)	$310.00
P2-8AD4DA-2	8/4	Analog Input/Output (Voltage)	$310.00

Specialty Modules

Productivity2000 Specialty Modules			
Part Number	Number of Channels	Description	Price
*P2-HSI***	2	High-Speed Input	$195.00
*P2-HSO***	2	High-Speed Output	$195.00
P2-SCM	4 ports	Serial Communications Module	$165.00

** *ZIP*Link required.

I/O Module Installation Procedure

WARNING: Do not apply field power until the following steps are completed. See hot-swapping procedure for exceptions.

Step One: Align module catch with base slot and rotate module into connector.

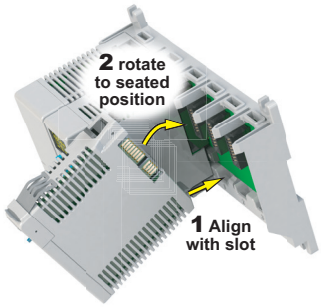

Step Two: Pull top locking tab toward module face. Click indicates lock is engaged.

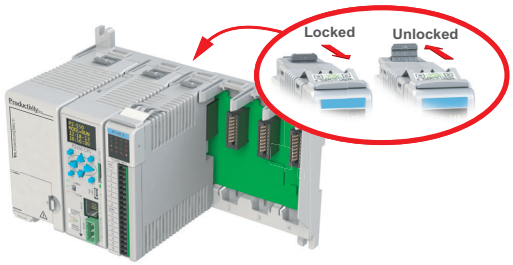

Step Three: Attach field wiring using removable terminal block or *ZIP*Link *wiring system*.

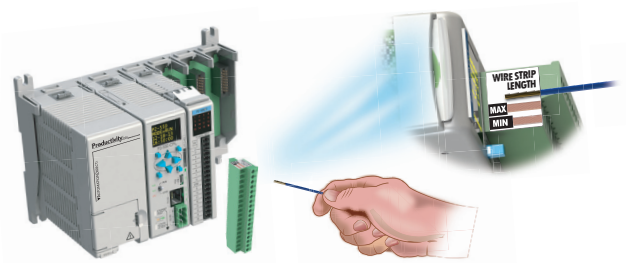

WARNING: Explosion hazard – Do not connect or disconnect connectors or operate switches while circuit is live unless the area is known to be non-hazardous. Do not hot-swap modules unless the area is known to be non-hazardous.

DC Output Modules

MODEL #: P2-16TD2P

P2-16TD2P $69.00

Sourcing Output

The P2-16TD2P DC Output Module provides sixteen 24VDC sourcing outputs with short-circuit and overload protection.

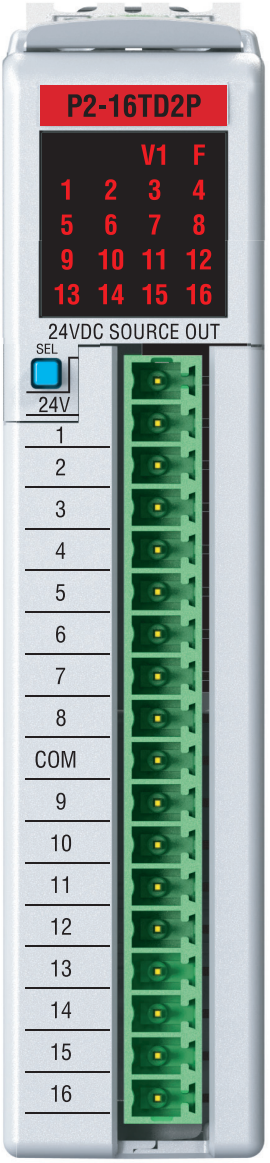

Terminal block sold separately

Output Specifications

Outputs per Module	16 sourcing
Voltage Rating	24VDC
Operating Voltage Range	21.6–26.4 VDC
Maximum Output Current	0.25 A continuous
On Voltage Drop	0.7 VDC
Maximum Inrush Current	Self-limited
OFF to ON Response	0.5 ms
ON to OFF Response	0.5 ms
Overcurrent Trip	0.6 A min., 1.2 A max.
Minimum Load Current to Avoid Open Load Fault Detection	113µA
Overtemperature Shutdown	Independent to each output
Load Resistance to Avoid Open Load Fault Detection	<58kΩ
Status Indicators	Logic Side (16 points)
External 24V Error Indicator	Logic Side (1 point)
Fault Condition Indicator	Logic Side (16 points)
Commons	1
Fuses	None
External DC Power Required	24VDC @ 55mA (not including 0.25 A per point)

General Specifications

Operating Temperature	0° to 60°C (32° to 140°F)
Storage Temperature	-20° to 70°C (-4° to 158°F)
Humidity	5 to 95% (non-condensing)
Environmental Air	No corrosive gases permitted
Vibration	IEC60068-2-6 (Test Fc)
Shock	IEC60068-2-27 (Test Ea)
Field to Logic Side Isolation	1800VAC applied for 1 second
Insulation Resistance	>10MΩ @ 500VDC
Heat Dissipation	2.6 W
Enclosure Type	Open Equipment
Module Keying to Backplane	Electronic
Module Location	Any I/O slot in a Productivity2000 System.
Field Wiring	Use ***ZIP***Link Wiring System or removable terminal block (not included). See Wiring Solutions.
EU Directive	See the "EU Directive" topic in the Productivity Suite Help File. Information can also be obtained at: www.productivity2000.com
Connector Type (Sold separately)	18 Position Removable Terminal Block
Weight	90g (3.2 oz)
Agency Approvals**	UL508 file E139594, Canada & USA CE (EN61131-2*)

*Meets EMC and Safety requirements. See the Declaration of Conformity for details.
**To obtain the most current agency approval information, see the Agency Approval Checklist section on the specific component part number web page.

LED Status

Fault Condition	Fault Status Indication	Operation to Reset Fault
Missing External 24VDC	'V1' LED is ON	Apply external 24VDC
Open Load (Note 1)	'F' LED is ON (Note 2)	Connect the load
Over Temperature or Over Load Current		Turn the output OFF or cycle power

Note 1: Open Load Fault is always enabled, but is only valid when output is OFF. If Open Load Fault happens while output is ON, fault will not appear until output turns OFF.
Note 2: The SEL button cycles between the output status and fault status. If the "F" LED is OFF the numbered LEDs are showing output status. If the "F" LED is ON the numbered LEDs are showing fault status of each output. The "V1" LED is independent of fault or output display.

We recommend using prewired ***ZIP***Link cables and connection modules. See Wiring Solutions.

If you wish to hand-wire your module, a removable terminal block is sold separately. Order part number P2-RTB or P2-RTB-1.

DC Output Modules

P2-16TD2P (cont'd)

Removable Terminal Block Specifications		
Part Number	**P2-RTB**	**P2-RTB-1**
Number of Positions	18 Screw Terminals	18 Spring Clamp Terminals
Wire Range	30-16 AWG (0.051–1.31 mm²) Solid / Stranded Conductor 3/64 in (1.2 mm) Insulation Maximum 1/4 in (6–7 mm) Strip Length	28-16 AWG (0.081–1.31 mm²) Solid / Stranded Conductor 3/64 in (1.2 mm) Insulation Maximum 19/64 in (7–8 mm) Strip Length
Conductors	"USE COPPER CONDUCTORS, 75°C" or Equivalent.	
Screw Driver Width	1/8 inch (3.8 mm) Maximum	
Screw Size	M2	N/A
Screw Torque	2.5 lb·in (0.28 N·m)	N/A

Wiring Diagrams

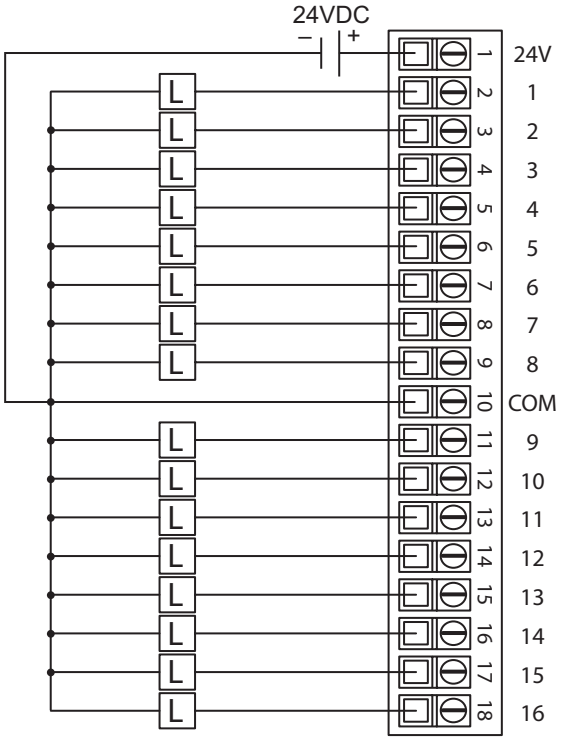

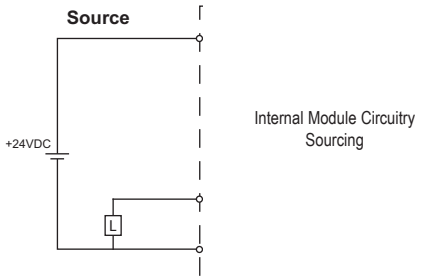

Wiring I/O Modules

There are two available methods for wiring most I/O modules: The ***ZIP***Link wiring system or hand wiring to the optional removable I/O module terminal blocks.

Note: Thermocouple and RTD modules are not compatible with the ***ZIP***Link system and are shipped with the optional terminal blocks included.

*ZIP*Links Wiring Systems

For wiring I/O modules, we strongly recommend using pre-wired ***ZIP***Links wiring systems, which eliminate the need for hand wiring modules to terminal blocks.

See the selection matrix guide on the following pages.

***ZIP*Link Pre-Wired Terminal Block Cable**

***ZIP*Link Pigtail Cable**

***ZIP*Link Module**

Removable Terminal Blocks

For most I/O modules you can also purchase a removable terminal block (part no. P2-RTB or P2-RTB-1).

Note: P2-RTB supplied with Thermocouple and RTD modules.

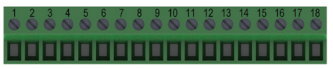

Removable Terminal Block P2-RTB

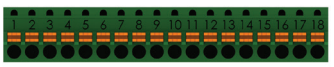

Removable Terminal Block P2-RTB-1

Terminal Block Removal

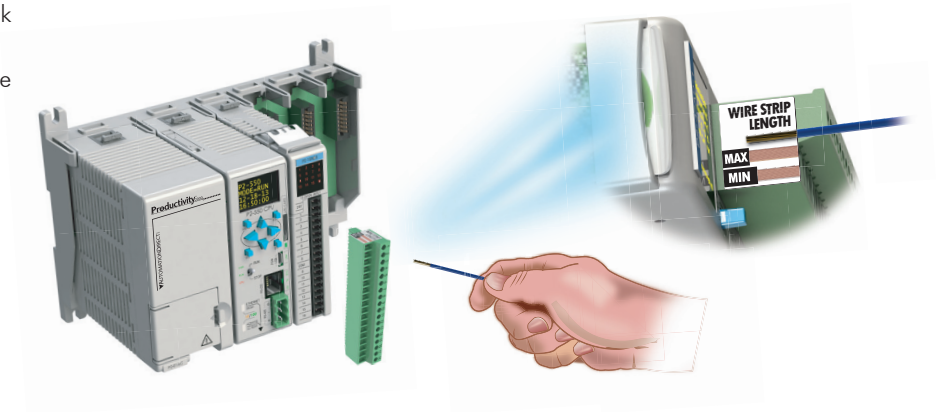

Wiring Solutions

Wiring Solutions using the *ZIP*Link Wiring System

ZIPLinks eliminate the normally tedious process of wiring between devices by utilizing prewired cables and DIN rail mount connector modules. It's as simple as plugging in a cable connector at either end and terminating wires at only one end. Prewired cables keep installation clean and efficient, using half the space at a fraction of the cost of standard terminal blocks. There are several wiring solutions available when using the ***ZIP***Link System ranging from CPU I/O-to-***ZIP***Link Connector Modules that are ready for field termination, options for connecting to third party devices, GS Series, DuraPulse and SureServo Drives, and specialty relay, transorb and communications modules. Pre-printed I/O-specific adhesive label strips for quick marking of ***ZIP***Link modules are provided with ***ZIP***Link cables. See the following solutions to help determine the best ***ZIP***Link system for your application.

Solution 1: DirectLOGIC, CLICK, Productivity2000 and Productivity3000 I/O Modules to *ZIP*Link Connector Modules

When looking for quick and easy I/O-to-field termination, a ***ZIP***Link connector module used in conjunction with a prewired ***ZIP***Link cable, consisting of an I/O terminal block at one end and a multi-pin connector at the other end, is the best solution.

Use the CPU I/O Modules to ***ZIP***Link Connector Modules selector tables located in the ***ZIP***Link Wiring Solutions section to:

1. Locate your I/O module/CPU,
2. Select a ***ZIP***Link Module, and
3. Select a corresponding ***ZIP***Link Cable.

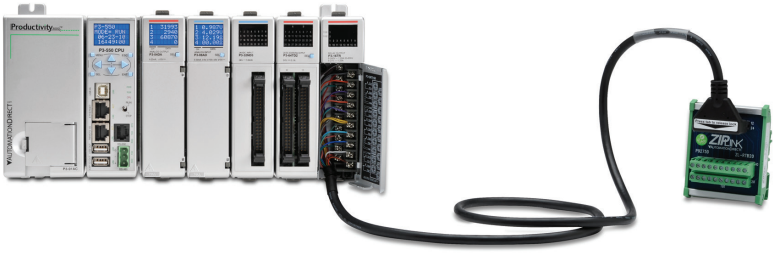

Solution 2: *Direct*LOGIC, CLICK, Productivity2000 and Productivity3000 I/O Modules to 3rd Party Devices

When wanting to connect I/O to another device within close proximity of the I/O modules, no extra terminal blocks are necessary when using the ***ZIP***Link Pigtail Cables. ***ZIP***Link Pigtail Cables are prewired to an I/O terminal block with color-coded pigtail with soldered-tip wires on the other end.

Use the I/O Modules to 3rd Party Devices selector tables located in the ***ZIP***Link Wiring Solutions section to:

1. Locate your CPU I/O module, and
2. Select a ***ZIP***Link Pigtail Cable that is compatible with your 3rd party device.

Solution 3: GS Series and DuraPulse Drives Communication Cables

Need to communicate via Modbus RTU to a drive or a network of drives?

ZIPLink cables are available in a wide range of configurations for connecting to CPUs, *SureServo*, *Sure*Step, Stellar Soft Starter and AC drives. Add a ***ZIP***Link communications module to quickly and easily set up a multi-device network.

Use the Drives Communication selector tables located in the ***ZIP***Link Wiring Solutions section to:

1. Locate your Drive and type of communications, and
2. Select a ***ZIP***Link cable and other associated hardware.

Wiring Solutions

Solution 4: Serial Communications Cables

ZIPLink offers communications cables for use with ***Direct***LOGIC, CLICK, Productivity2000 and Productivity3000 CPUs, that can also be used with other communications devices. Connections include a 6-pin RJ12 or 9-pin, 15-pin and 25-pin D-Sub connectors which can be used in conjunction with the RJ12 or D-Sub Feedthrough modules.

Using the Serial Communications Cables selector table located in the ***ZIP***Link Wiring Solutions section,

1. Locate your connector type
2. Select a cable.

Solution 5: Specialty *ZIP*Link Modules

For additional application solutions, ***ZIP***Link Specialty Modules are available in a variety of configurations including stand-alone relays, 24VDC and 120VAC transorb modules, D-Sub and RJ12 feedthrough modules, communication port adapter and distribution modules, and SureServo 50-pin I/O interface connection.

Using the ***ZIP***Link Specialty Modules selector table located in the ***ZIP***Link Wiring Solutions section:

1. Locate the type of application.
2. Select a ***ZIP***Link module.

Solution 6: *ZIP*Link Connector Modules to 3rd Party Devices

If you need a way to connect your device to terminal blocks without all that wiring time, then our pigtail cables with color-coded soldered-tip wires are a good solution. Used in conjunction with any compatible ***ZIP***Link Connector Modules, a pigtail cable keeps wiring clean and easy and reduces troubleshooting time.

Use the Universal Connector Modules and Pigtail Cables table located in the ***ZIP***Link Wiring Solutions section to:

1. Select module type,
2. Select the number of pins,
3. Select cable.

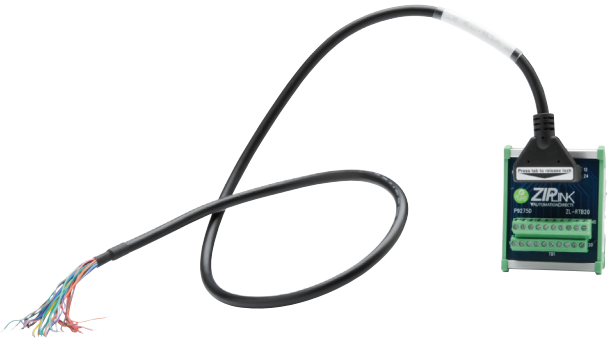

CPU I/O Modules to *ZIP*Link Connector Modules - Productivity2000

Discrete Input Modules

Productivity2000 Input Module *ZIP*Link Selector				
I/O Input Module	*ZIP*Link			
	# of Terms	Component	Part No.	Cable Part No.
P2-08ND3	18	Feedthrough	ZL-RTB20 (-1)	ZL-P2-CBL18 *
P2-16ND3		Sensor/LED	ZL-LTB16-24-1	
P2-08NE3		Feedthrough	ZL-RTB20 (-1)	
P2-16NE3		Sensor/LED	ZL-LTB16-24-1	
P2-32ND3	40	Feedthrough	ZL-RTB40 (-1)	ZL-CBL40 *
		Sensor/LED	ZL-LTB32-24-1	
P2-32NE3	40	Feedthrough	ZL-RTB40 (-1)	
		Sensor/LED	ZL-LTB32-24-1	
P2-08NAS	8	Feedthrough	ZL-RTB20 (-1)	ZL-P2-CBL18 *
P2-16NA	18			

Specialty Modules

Productivity2000 Specialty & Motion Modules *ZIP*Link Selector				
I/O Module	*ZIP*Link			
	# of Terms	Component	Part No.	Cable Part No.
P2-HSI	40	Feedthrough	ZL-RTB40 (-1)	ZL-CBL40 *S
P2-HSO				
P2-08SIM	See Note 1			
P2-SCM				

Discrete Output Modules

Productivity2000 Output Module *ZIP*Link Selector				
I/O Output Module	*ZIP*Link			
	# of Terms	Component	Part No.	Cable Part No.
P2-08TD1S	8	Feedthrough	ZL-RTB20 (-1)	ZL-P2-CBL18 *
P2-08TD2S	8			
P2-15TD1	15			
P2-15TD2	15			
P2-08TD1P	18			
P2-08TD2P	18			
P2-08TRS	18			
P2-08TAS	18			
P2-16TA	18	Feedthrough	ZL-RTB20 (-1)	
		Fuse	ZL-RFU20 [2]	
P2-16TD1P	18	Feedthrough	ZL-RTB20 (-1)	
		Relay (Sourcing)	ZL-RRL16-24-1 ZL-RRL16W-24-1 ZL-RRL16F-24-1 ZL-RRL16HDF-24-1	
P2-16TD2P	18	Feedthrough	ZL-RTB20 (-1)	
		Relay (Sinking)	ZL-RRL16-24-2 ZL-RRL16W-24-2 ZL-RRL16F-24-2 ZL-RRL16HDF-24-2	
P2-32TD1P	32	Feedthrough	ZL-RTB40 (-1)	ZL-CBL40 *
P2-32TD2P	32			
P2-16TR	18	Feedthrough	ZL-RTB20 (-1)	ZL-P2-CBL18 *
		Fuse	ZL-RFU20 [2]	

** Select the cable length by replacing the * with: Blank = 0.5 m, -1 = 1.0 m, or -2 = 2.0 m.*

[1] *These modules are not supported by the **ZIP**Link wiring system*

[2] *Note: Fuses (5 x 20 mm) are not included. See Edison Electronic Fuse section for (5 x 20 mm) fuse. S500 and GMA electronic circuit protection for fast-acting maximum protection. S506 and GMC electronic circuit protection for time-delay performance. Ideal for inductive circuits.*
*To ensure proper operation, do not exceed the voltage and current rating of **ZIP**Link module. ZL-RFU20 = 2A per circuit; ZL-RFU40 = 400 mA per circuit.*

CPU I/O Modules to *ZIP*Link Connector Modules - Productivity2000

Analog Input Modules

Productivity2000 Analog Input Module *ZIP*Link Selector				
I/O Analog Module	*ZIP*Link			
	# of Terms	Component	Part No.	Cable Part No.
P2-04AD	18	Feedthrough	ZL-RTB20 (-1)	ZL-P2-CBL18 *
P2-08AD-1				
P2-08AD-2				
P2-08ADL-1				
P2-08ADL-2				
P2-16AD-1	24			ZL-P2-CBL24 *
P2-16AD-2				
P2-16ADL-1				
P2-16ADL-2				
P2-06RTD	Matched Only	See Note 1		
P2-08THM	T/C Wire Only	See Note 1		
P2-08NTC	Copper Conductors	See Note 1		

** Select the cable length by replacing the * with: Blank = 0.5 m, -1 = 1.0 m, or -2 = 2.0 m.*

[1] *These modules are not supported by the ZIP*Link *wiring system.*

Analog Output Modules

Productivity2000 Analog Output Module *ZIP*Link Selector				
I/O Analog Module	*ZIP*Link			
	# of Terms	Component	Part No.	Cable Part No.
P2-04DA	18	Feedthrough	ZL-RTB20 (-1)	ZL-P2-CBL18 *
P2-04DAL-1				
P2-04DAL-2				
P2-08DA-1				
P2-08DA-2				
P2-08DAL-1				
P2-08DAL-2				
P2-16DA-1	24			ZL-P2-CBL24 *
P2-16DA-2				
P2-16DAL-1				
P2-16DAL-2				
P2-8AD4DA-1	18			ZL-P2-CBL18 *
P2-8AD4DA-2				

I/O Modules

A variety of discrete, analog and specialty I/O modules are available for use in a Productivity2000 System. Specifications for each module are on the following pages.

A filler module is available for unused I/O module slots (part number P2-FILL).

Discrete Input Modules

Productivity2000 Discrete Input Modules			
Part Number	Number of Inputs	Description	Price
P2-08SIM	8	Input Simulator Module	$47.00
P2-08ND3	8	Sinking/Sourcing 12–24 VDC	$46.00
P2-08NE3	8	Sinking/Sourcing 24V AC/DC	$40.00
P2-16ND3	16	Sinking/Sourcing 12–24 VDC	$69.00
P2-16NE3	16	Sinking/Sourcing 24V AC/DC	$69.00
P2-32ND3	32	Sinking/Sourcing 24 VDC	$99.00
P2-32NE3	32	Sinking/Sourcing 24V AC/DC	$99.00
P2-08NAS	8	AC Isolated 100-120 VAC	$77.00
P2-16NA	16	AC 100-240 VAC	$105.00

Analog Input Modules

Productivity2000 Analog Input Modules			
Part Number	Number of Channels	Description	Price
P2-04AD	4	Analog Input (Voltage/Current)	$195.00
P2-08AD-1	8	Analog Input (Current)	$199.00
P2-08AD-2	8	Analog Input (Voltage)	$219.00
*P2-08ADL-1**	8	Analog Input (Current)	$143.00
*P2-08ADL-2**	8	Analog Input (Voltage)	$157.50
P2-16AD-1	16	Analog Input (Current)	$249.00
P2-16AD-2	16	Analog Input (Voltage)	$275.00
*P2-16ADL-1**	16	Analog Input (Current)	$178.00
*P2-16ADL-2**	16	Analog Input (Voltage)	$196.00
P2-06RTD	6	Analog RTD Input	$325.00
P2-08THM	8	Analog Thermocouple Input	$329.00
P2-08NTC	8	Analog Thermistor Input	$265.00

Analog Output Modules

Productivity2000 Analog Output Modules			
Part Number	Number of Channels	Description	Price
P2-04DA	4	Analog Output (Voltage/Current)	$194.00
*P2-04DAL-1**	4	Analog Output (Current)	$110.00
*P2-04DAL-2**	4	Analog Output (Voltage)	$101.00
P2-08DA-1	8	Analog Output (Current)	$269.00
P2-08DA-2	8	Analog Output (Voltage)	$249.00
*P2-08DAL-1**	8	Analog Output (Current)	$202.00
*P2-08DAL-2**	8	Analog Output (Voltage)	$195.50
P2-16DA-1	16	Analog Output (Current)	$354.00
P2-16DA-2	16	Analog Output (Voltage)	$339.00
*P2-16DAL-1**	16	Analog Output (Current)	$253.00
*P2-16DAL-2**	16	Analog Output (Voltage)	$243.00

* Low resolution analog modules without OLED display.

Discrete Output Modules

Productivity2000 Discrete Output Modules			
Part Number	Number of Outputs	Description	Price
P2-08TD1S	8	Isolated Sinking	$47.00
P2-08TD2S	8	Isolated Sourcing	$47.00
P2-15TD1	15	Sinking	$65.00
P2-15TD2	15	Sourcing	$65.00
P2-08TD1P	8	Sinking Protected	$41.00
P2-08TD2P	8	Sourcing Protected	$41.00
P2-16TD1P	16	Sinking Protected	$69.00
P2-16TD2P	16	Sourcing Protected	$69.00
P2-32TD1P	32	Sinking Protected	$99.00
P2-32TD2P	32	Sourcing Protected	$99.00
P2-08TAS	8	Isolated AC	$105.00
P2-16TA	16	100-240 VAC Output	$129.00
P2-08TRS	8	Isolated Relay	$51.00
P2-16TR	16	Relay	$95.00

Productivity2000 Analog Input/Output Modules			
Part Number	Number of Channels	Description	Price
P2-8AD4DA-1	8/4	Analog Input/Output (Current)	$310.00
P2-8AD4DA-2	8/4	Analog Input/Output (Voltage)	$310.00

Specialty Modules

Productivity2000 Specialty Modules			
Part Number	Number of Channels	Description	Price
*P2-HSI***	2	High-Speed Input	$195.00
*P2-HSO***	2	High-Speed Output	$195.00
P2-SCM	4 ports	Serial Communications Module	$165.00

** *ZIP*Link required.

I/O Module Installation Procedure

WARNING: Do not apply field power until the following steps are completed. See hot-swapping procedure for exceptions.

Step One: Align module catch with base slot and rotate module into connector.

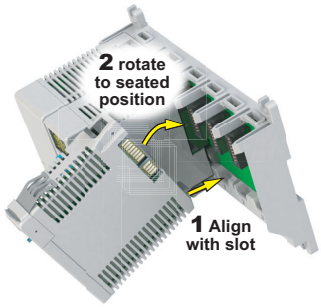

Step Two: Pull top locking tab toward module face. Click indicates lock is engaged.

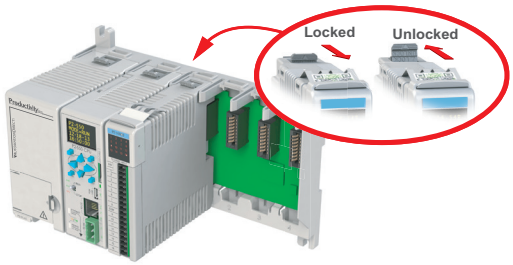

Step Three: Attach field wiring using removable terminal block or *ZIP*Link *wiring system*.

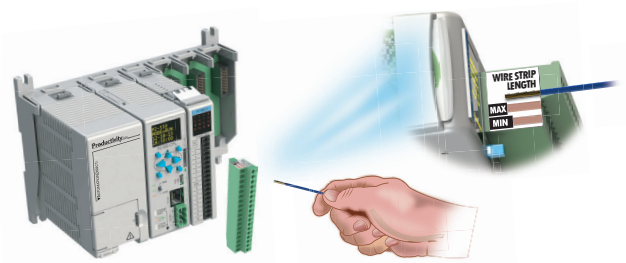

WARNING: Explosion hazard – Do not connect or disconnect connectors or operate switches while circuit is live unless the area is known to be non-hazardous. Do not hot-swap modules unless the area is known to be non-hazardous.

MODEL #: P2-16AD-1

Prices as of April 27, 2016. Check Web site for most current prices.

Analog Input Modules

P2-16AD-1 $249.00

Current Analog Input

The P2-16AD-1 Current Analog Input Module provides sixteen channels for receiving 0 to 20 mA input signals.

No terminal block sold for this module; *ZIP*Link required.

Input Specifications

Input Channels	16 sinking
Module Signal Input Range	0–20mA
Signal Resolution	16-bit
Resolution Value of LSB (least significant bit)	0–20mA = 305µA per count (1 LSB = 1 count)
Data Range	0 to 65535 counts
Input Type	Single-ended (1 common)
Maximum Continuous Overload	±31mA
Input Impedance	250Ω ±0.1% 1/4 W
Filter Characteristics	Low Pass, -3dB @ 100Hz
Sample Duration Time	4ms per channel (does not include ladder scan time)
All Channel Update Rate	112ms
Open Circuit Detection Time	Zero reading within 1s
Conversion Method	Successive approximation
Accuracy vs. Temperature	±25PPM / °C maximum
Maximum Inaccuracy	0.1% of range (including temperature drift)
Linearity Error (end to end)	±10 LSB maximum (±0.015% of range) Monotonic with no missing codes
Input Stability and Repeatability	±10 LSB
Full Scale Calibration Error (not including offset)	±10 LSB maximum (±0.015% of range)
Offset Calibration Error	±10 LSB maximum
Max Crosstalk	-76dB, ±10 LSB
Recommended Fuse (external)	Edison S500-32-R, 0.032 A fuse
External DC Power Required	24VDC (-20% / +25%) 35mA

General Specifications

Operating Temperature	0° to 60°C (32° to 140°F)
Storage Temperature	-20° to 70°C (-4° to 158°F)
Humidity	5 to 95% (non-condensing)
Environmental Air	No corrosive gases permitted
Vibration	IEC60068-2-6 (Test Fc)
Shock	IEC60068-2-27 (Test Ea)
Field to Logic Side Isolation	1800VAC applied for 1 second
Insulation Resistance	>10MΩ @ 500VDC
Heat Dissipation	800mW
Enclosure Type	Open Equipment
Module Keying to Backplane	Electronic
Module Location	Any I/O slot in a Productivity2000 System
Field Wiring	*ZIP*Link Wiring System ONLY. See Wiring Solutions. Must use copper conductors 75°C or equivalent.
EU Directive	See the "EU Directive" topic in the Productivity Suite Help File. Information can also be obtained at: www.productivity2000.com
Connector Type	24-Pin Molex Style 43025-2400
Weight	90g (3.2 oz)
Agency Approvals**	UL508 File E139594, Canada & USA CE (EN61131-2*)

*Meets EMC and Safety requirements. See the Declaration of Conformity for details.
**To obtain the most current agency approval information, see the Agency Approval Checklist section on the specific component part number web page.

We recommend using pre-wired *ZIP*Link cables and connection modules. See Wiring Solutions.

Module connector type is a 24-pin Molex Style 43025-2400.

Analog Input Modules

P2-16AD-1 (cont'd)

Connector Specifications	
Connector Type	24-Pin Molex Style 43025-2400
Number of Pins	24
Pin Spacing	3x3 mm (0.118 x 0.118 in)

Wiring Diagrams

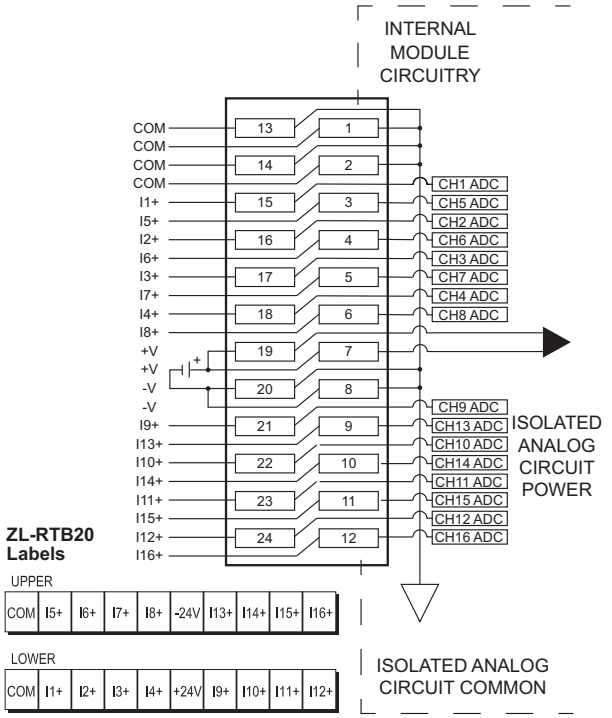

Current Input Circuits

An Edison S500-32-R 0.032A fast-acting fuse is recommended for current loops.

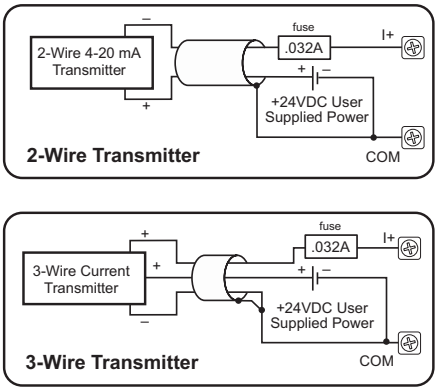

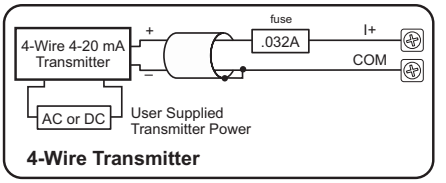

Note: Do not connect both ends of shield.

Wiring I/O Modules

There are two available methods for wiring most I/O modules: The ***ZIP***Link wiring system or hand wiring to the optional removable I/O module terminal blocks.

Note: Thermocouple and RTD modules are not compatible with the ***ZIP***Link system and are shipped with the optional terminal blocks included.

*ZIP*Links Wiring Systems

For wiring I/O modules, we strongly recommend using pre-wired ***ZIP***Links wiring systems, which eliminate the need for hand wiring modules to terminal blocks.

See the selection matrix guide on the following pages.

***ZIP*Link Pre-Wired Terminal Block Cable**

***ZIP*Link Pigtail Cable**

***ZIP*Link Module**

Removable Terminal Blocks

For most I/O modules you can also purchase a removable terminal block (part no. P2-RTB or P2-RTB-1).

Note: P2-RTB supplied with Thermocouple and RTD modules.

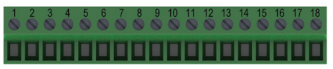

Removable Terminal Block P2-RTB

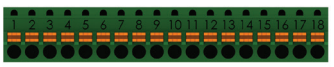

Removable Terminal Block P2-RTB-1

Terminal Block Removal

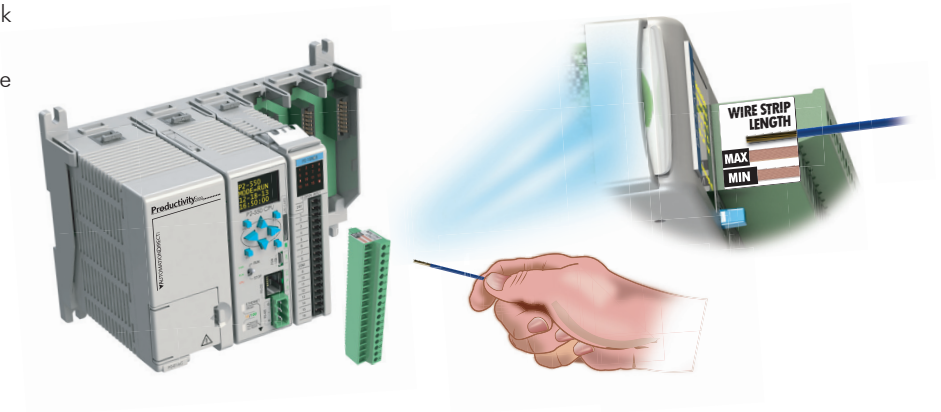

Wiring Solutions

Wiring Solutions using the *ZIP*Link Wiring System

ZIPLinks eliminate the normally tedious process of wiring between devices by utilizing prewired cables and DIN rail mount connector modules. It's as simple as plugging in a cable connector at either end and terminating wires at only one end. Prewired cables keep installation clean and efficient, using half the space at a fraction of the cost of standard terminal blocks. There are several wiring solutions available when using the ***ZIP***Link System ranging from CPU I/O-to-***ZIP***Link Connector Modules that are ready for field termination, options for connecting to third party devices, GS Series, DuraPulse and SureServo Drives, and specialty relay, transorb and communications modules. Pre-printed I/O-specific adhesive label strips for quick marking of ***ZIP***Link modules are provided with ***ZIP***Link cables. See the following solutions to help determine the best ***ZIP***Link system for your application.

Solution 1: DirectLOGIC, CLICK, Productivity2000 and Productivity3000 I/O Modules to *ZIP*Link Connector Modules

When looking for quick and easy I/O-to-field termination, a ***ZIP***Link connector module used in conjunction with a prewired ***ZIP***Link cable, consisting of an I/O terminal block at one end and a multi-pin connector at the other end, is the best solution.

Use the CPU I/O Modules to ***ZIP***Link Connector Modules selector tables located in the ***ZIP***Link Wiring Solutions section to:

1. Locate your I/O module/CPU,
2. Select a ***ZIP***Link Module, and
3. Select a corresponding ***ZIP***Link Cable.

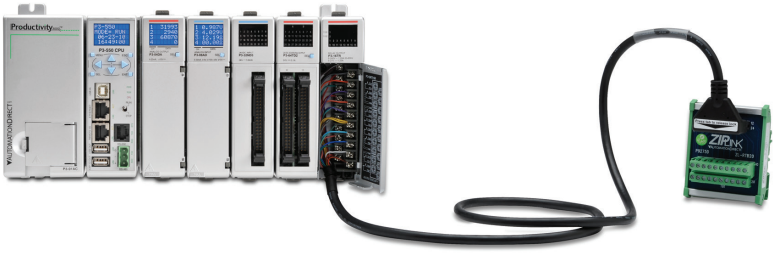

Solution 2: *Direct*LOGIC, CLICK, Productivity2000 and Productivity3000 I/O Modules to 3rd Party Devices

When wanting to connect I/O to another device within close proximity of the I/O modules, no extra terminal blocks are necessary when using the ***ZIP***Link Pigtail Cables. ***ZIP***Link Pigtail Cables are prewired to an I/O terminal block with color-coded pigtail with soldered-tip wires on the other end.

Use the I/O Modules to 3rd Party Devices selector tables located in the ***ZIP***Link Wiring Solutions section to:

1. Locate your CPU I/O module, and
2. Select a ***ZIP***Link Pigtail Cable that is compatible with your 3rd party device.

Solution 3: GS Series and DuraPulse Drives Communication Cables

Need to communicate via Modbus RTU to a drive or a network of drives?

ZIPLink cables are available in a wide range of configurations for connecting to CPUs, *SureServo*, *Sure*Step, Stellar Soft Starter and AC drives. Add a ***ZIP***Link communications module to quickly and easily set up a multi-device network.

Use the Drives Communication selector tables located in the ***ZIP***Link Wiring Solutions section to:

1. Locate your Drive and type of communications, and
2. Select a ***ZIP***Link cable and other associated hardware.

Wiring Solutions

Solution 4: Serial Communications Cables

ZIPLink offers communications cables for use with ***Direct***LOGIC, CLICK, Productivity2000 and Productivity3000 CPUs, that can also be used with other communications devices. Connections include a 6-pin RJ12 or 9-pin, 15-pin and 25-pin D-Sub connectors which can be used in conjunction with the RJ12 or D-Sub Feedthrough modules.

Using the Serial Communications Cables selector table located in the ***ZIP***Link Wiring Solutions section,

1. Locate your connector type
2. Select a cable.

Solution 5: Specialty *ZIP*Link Modules

For additional application solutions, ***ZIP***Link Specialty Modules are available in a variety of configurations including stand-alone relays, 24VDC and 120VAC transorb modules, D-Sub and RJ12 feedthrough modules, communication port adapter and distribution modules, and SureServo 50-pin I/O interface connection.

Using the ***ZIP***Link Specialty Modules selector table located in the ***ZIP***Link Wiring Solutions section:

1. Locate the type of application.
2. Select a ***ZIP***Link module.

Solution 6: *ZIP*Link Connector Modules to 3rd Party Devices

If you need a way to connect your device to terminal blocks without all that wiring time, then our pigtail cables with color-coded soldered-tip wires are a good solution. Used in conjunction with any compatible ***ZIP***Link Connector Modules, a pigtail cable keeps wiring clean and easy and reduces troubleshooting time.

Use the Universal Connector Modules and Pigtail Cables table located in the ***ZIP***Link Wiring Solutions section to:

1. Select module type,
2. Select the number of pins,
3. Select cable.

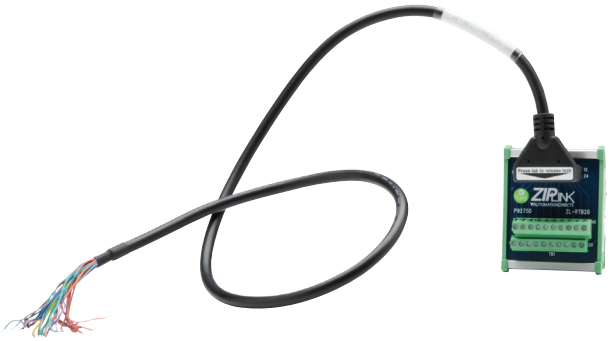

CPU I/O Modules to *ZIP*Link Connector Modules - Productivity2000

Discrete Input Modules

Productivity2000 Input Module *ZIP*Link Selector				
I/O Input Module	*ZIP*Link			
	# of Terms	Component	Part No.	Cable Part No.
P2-08ND3	18	Feedthrough	ZL-RTB20 (-1)	ZL-P2-CBL18 *
P2-16ND3		Sensor/LED	ZL-LTB16-24-1	
P2-08NE3		Feedthrough	ZL-RTB20 (-1)	
P2-16NE3		Sensor/LED	ZL-LTB16-24-1	
P2-32ND3	40	Feedthrough	ZL-RTB40 (-1)	ZL-CBL40 *
		Sensor/LED	ZL-LTB32-24-1	
P2-32NE3	40	Feedthrough	ZL-RTB40 (-1)	
		Sensor/LED	ZL-LTB32-24-1	
P2-08NAS	8	Feedthrough	ZL-RTB20 (-1)	ZL-P2-CBL18 *
P2-16NA	18			

Specialty Modules

Productivity2000 Specialty & Motion Modules *ZIP*Link Selector				
I/O Module	*ZIP*Link			
	# of Terms	Component	Part No.	Cable Part No.
P2-HSI	40	Feedthrough	ZL-RTB40 (-1)	ZL-CBL40 *S
P2-HSO				
P2-08SIM	See Note 1			
P2-SCM				

Discrete Output Modules

Productivity2000 Output Module *ZIP*Link Selector				
I/O Output Module	*ZIP*Link			
	# of Terms	Component	Part No.	Cable Part No.
P2-08TD1S	8	Feedthrough	ZL-RTB20 (-1)	ZL-P2-CBL18 *
P2-08TD2S	8			
P2-15TD1	15			
P2-15TD2	15			
P2-08TD1P	18			
P2-08TD2P	18			
P2-08TRS	18			
P2-08TAS	18			
P2-16TA	18	Feedthrough	ZL-RTB20 (-1)	
		Fuse	ZL-RFU20 [2]	
P2-16TD1P	18	Feedthrough	ZL-RTB20 (-1)	
		Relay (Sourcing)	ZL-RRL16-24-1 ZL-RRL16W-24-1 ZL-RRL16F-24-1 ZL-RRL16HDF-24-1	
P2-16TD2P	18	Feedthrough	ZL-RTB20 (-1)	
		Relay (Sinking)	ZL-RRL16-24-2 ZL-RRL16W-24-2 ZL-RRL16F-24-2 ZL-RRL16HDF-24-2	
P2-32TD1P	32	Feedthrough	ZL-RTB40 (-1)	ZL-CBL40 *
P2-32TD2P	32			
P2-16TR	18	Feedthrough	ZL-RTB20 (-1)	ZL-P2-CBL18 *
		Fuse	ZL-RFU20 [2]	

** Select the cable length by replacing the * with: Blank = 0.5 m, -1 = 1.0 m, or -2 = 2.0 m.*

[1] *These modules are not supported by the **ZIP**Link wiring system*

[2] *Note: Fuses (5 x 20 mm) are not included. See Edison Electronic Fuse section for (5 x 20 mm) fuse. S500 and GMA electronic circuit protection for fast-acting maximum protection. S506 and GMC electronic circuit protection for time-delay performance. Ideal for inductive circuits.*
*To ensure proper operation, do not exceed the voltage and current rating of **ZIP**Link module. ZL-RFU20 = 2A per circuit; ZL-RFU40 = 400 mA per circuit.*

CPU I/O Modules to *ZIP*Link Connector Modules - Productivity2000

Analog Input Modules

Productivity2000 Analog Input Module *ZIP*Link Selector				
I/O Analog Module	*ZIP*Link			
	# of Terms	Component	Part No.	Cable Part No.
P2-04AD	18	Feedthrough	ZL-RTB20 (-1)	ZL-P2-CBL18 *
P2-08AD-1				
P2-08AD-2				
P2-08ADL-1				
P2-08ADL-2				
P2-16AD-1	24			ZL-P2-CBL24 *
P2-16AD-2				
P2-16ADL-1				
P2-16ADL-2				
P2-06RTD	Matched Only	See Note 1		
P2-08THM	T/C Wire Only	See Note 1		
P2-08NTC	Copper Conductors	See Note 1		

** Select the cable length by replacing the * with: Blank = 0.5 m, -1 = 1.0 m, or -2 = 2.0 m.*

[1] *These modules are not supported by the ZIP*Link *wiring system.*

Analog Output Modules

Productivity2000 Analog Output Module *ZIP*Link Selector				
I/O Analog Module	*ZIP*Link			
	# of Terms	Component	Part No.	Cable Part No.
P2-04DA	18	Feedthrough	ZL-RTB20 (-1)	ZL-P2-CBL18 *
P2-04DAL-1				
P2-04DAL-2				
P2-08DA-1				
P2-08DA-2				
P2-08DAL-1				
P2-08DAL-2				
P2-16DA-1	24			ZL-P2-CBL24 *
P2-16DA-2				
P2-16DAL-1				
P2-16DAL-2				
P2-8AD4DA-1	18			ZL-P2-CBL18 *
P2-8AD4DA-2				

I/O Modules

A variety of discrete, analog and specialty I/O modules are available for use in a Productivity2000 System. Specifications for each module are on the following pages.

A filler module is available for unused I/O module slots (part number P2-FILL).

Discrete Input Modules

Productivity2000 Discrete Input Modules			
Part Number	Number of Inputs	Description	Price
P2-08SIM	8	Input Simulator Module	$47.00
P2-08ND3	8	Sinking/Sourcing 12–24 VDC	$46.00
P2-08NE3	8	Sinking/Sourcing 24V AC/DC	$40.00
P2-16ND3	16	Sinking/Sourcing 12–24 VDC	$69.00
P2-16NE3	16	Sinking/Sourcing 24V AC/DC	$69.00
P2-32ND3	32	Sinking/Sourcing 24 VDC	$99.00
P2-32NE3	32	Sinking/Sourcing 24V AC/DC	$99.00
P2-08NAS	8	AC Isolated 100-120 VAC	$77.00
P2-16NA	16	AC 100-240 VAC	$105.00

Analog Input Modules

Productivity2000 Analog Input Modules			
Part Number	Number of Channels	Description	Price
P2-04AD	4	Analog Input (Voltage/Current)	$195.00
P2-08AD-1	8	Analog Input (Current)	$199.00
P2-08AD-2	8	Analog Input (Voltage)	$219.00
*P2-08ADL-1**	8	Analog Input (Current)	$143.00
*P2-08ADL-2**	8	Analog Input (Voltage)	$157.50
P2-16AD-1	16	Analog Input (Current)	$249.00
P2-16AD-2	16	Analog Input (Voltage)	$275.00
*P2-16ADL-1**	16	Analog Input (Current)	$178.00
*P2-16ADL-2**	16	Analog Input (Voltage)	$196.00
P2-06RTD	6	Analog RTD Input	$325.00
P2-08THM	8	Analog Thermocouple Input	$329.00
P2-08NTC	8	Analog Thermistor Input	$265.00

Analog Output Modules

Productivity2000 Analog Output Modules			
Part Number	Number of Channels	Description	Price
P2-04DA	4	Analog Output (Voltage/Current)	$194.00
*P2-04DAL-1**	4	Analog Output (Current)	$110.00
*P2-04DAL-2**	4	Analog Output (Voltage)	$101.00
P2-08DA-1	8	Analog Output (Current)	$269.00
P2-08DA-2	8	Analog Output (Voltage)	$249.00
*P2-08DAL-1**	8	Analog Output (Current)	$202.00
*P2-08DAL-2**	8	Analog Output (Voltage)	$195.50
P2-16DA-1	16	Analog Output (Current)	$354.00
P2-16DA-2	16	Analog Output (Voltage)	$339.00
*P2-16DAL-1**	16	Analog Output (Current)	$253.00
*P2-16DAL-2**	16	Analog Output (Voltage)	$243.00

* Low resolution analog modules without OLED display.

Discrete Output Modules

Productivity2000 Discrete Output Modules			
Part Number	Number of Outputs	Description	Price
P2-08TD1S	8	Isolated Sinking	$47.00
P2-08TD2S	8	Isolated Sourcing	$47.00
P2-15TD1	15	Sinking	$65.00
P2-15TD2	15	Sourcing	$65.00
P2-08TD1P	8	Sinking Protected	$41.00
P2-08TD2P	8	Sourcing Protected	$41.00
P2-16TD1P	16	Sinking Protected	$69.00
P2-16TD2P	16	Sourcing Protected	$69.00
P2-32TD1P	32	Sinking Protected	$99.00
P2-32TD2P	32	Sourcing Protected	$99.00
P2-08TAS	8	Isolated AC	$105.00
P2-16TA	16	100-240 VAC Output	$129.00
P2-08TRS	8	Isolated Relay	$51.00
P2-16TR	16	Relay	$95.00

Productivity2000 Analog Input/Output Modules			
Part Number	Number of Channels	Description	Price
P2-8AD4DA-1	8/4	Analog Input/Output (Current)	$310.00
P2-8AD4DA-2	8/4	Analog Input/Output (Voltage)	$310.00

Specialty Modules

Productivity2000 Specialty Modules			
Part Number	Number of Channels	Description	Price
*P2-HSI***	2	High-Speed Input	$195.00
*P2-HSO***	2	High-Speed Output	$195.00
P2-SCM	4 ports	Serial Communications Module	$165.00

** *ZIP*Link required.

I/O Module Installation Procedure

WARNING: Do not apply field power until the following steps are completed. See hot-swapping procedure for exceptions.

Step One: Align module catch with base slot and rotate module into connector.

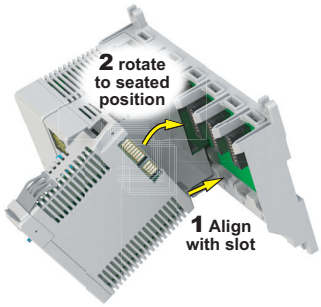

Step Two: Pull top locking tab toward module face. Click indicates lock is engaged.

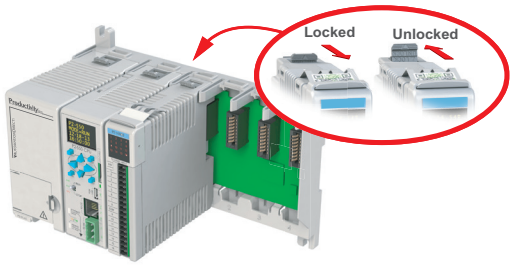

Step Three: Attach field wiring using removable terminal block or *ZIP*Link *wiring system*.

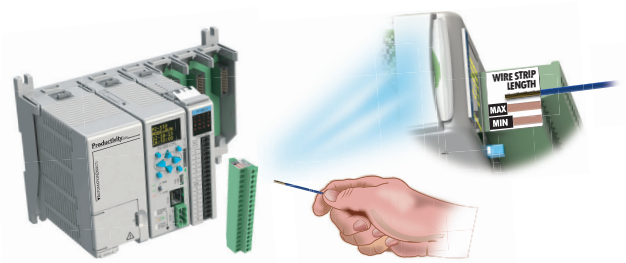

WARNING: Explosion hazard – Do not connect or disconnect connectors or operate switches while circuit is live unless the area is known to be non-hazardous. Do not hot-swap modules unless the area is known to be non-hazardous.

Wiring I/O Modules

There are two available methods for wiring most I/O modules: The ***ZIP***Link wiring system or hand wiring to the optional removable I/O module terminal blocks.

Note: Thermocouple and RTD modules are not compatible with the ***ZIP***Link system and are shipped with the optional terminal blocks included.

*ZIP*Links Wiring Systems

For wiring I/O modules, we strongly recommend using pre-wired ***ZIP***Links wiring systems, which eliminate the need for hand wiring modules to terminal blocks.

See the selection matrix guide on the following pages.

***ZIP*Link Pre-Wired Terminal Block Cable**

***ZIP*Link Pigtail Cable**

***ZIP*Link Module**

Removable Terminal Blocks

For most I/O modules you can also purchase a removable terminal block (part no. P2-RTB or P2-RTB-1).

Note: P2-RTB supplied with Thermocouple and RTD modules.

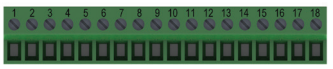

Removable Terminal Block P2-RTB

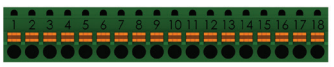

Removable Terminal Block P2-RTB-1

Terminal Block Removal

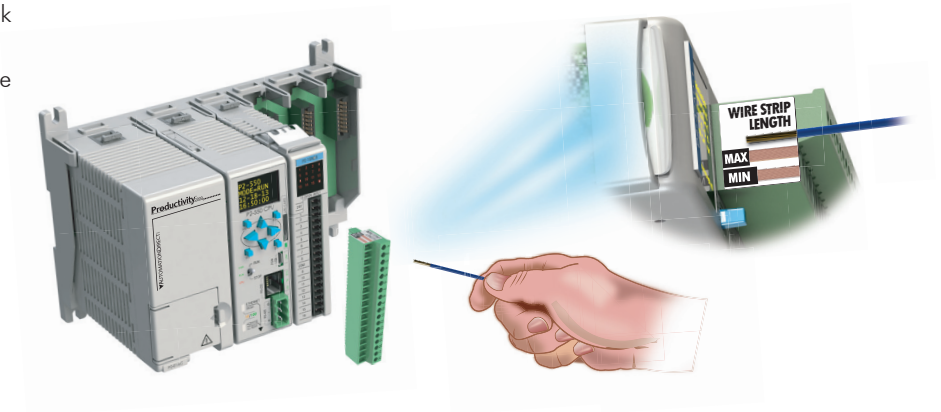

Wiring Solutions

Wiring Solutions using the *ZIP*Link Wiring System

ZIPLinks eliminate the normally tedious process of wiring between devices by utilizing prewired cables and DIN rail mount connector modules. It's as simple as plugging in a cable connector at either end and terminating wires at only one end. Prewired cables keep installation clean and efficient, using half the space at a fraction of the cost of standard terminal blocks. There are several wiring solutions available when using the ***ZIP***Link System ranging from CPU I/O-to-***ZIP***Link Connector Modules that are ready for field termination, options for connecting to third party devices, GS Series, DuraPulse and SureServo Drives, and specialty relay, transorb and communications modules. Pre-printed I/O-specific adhesive label strips for quick marking of ***ZIP***Link modules are provided with ***ZIP***Link cables. See the following solutions to help determine the best ***ZIP***Link system for your application.

Solution 1: DirectLOGIC, CLICK, Productivity2000 and Productivity3000 I/O Modules to *ZIP*Link Connector Modules

When looking for quick and easy I/O-to-field termination, a ***ZIP***Link connector module used in conjunction with a prewired ***ZIP***Link cable, consisting of an I/O terminal block at one end and a multi-pin connector at the other end, is the best solution.

Use the CPU I/O Modules to ***ZIP***Link Connector Modules selector tables located in the ***ZIP***Link Wiring Solutions section to:

1. Locate your I/O module/CPU,
2. Select a ***ZIP***Link Module, and
3. Select a corresponding ***ZIP***Link Cable.

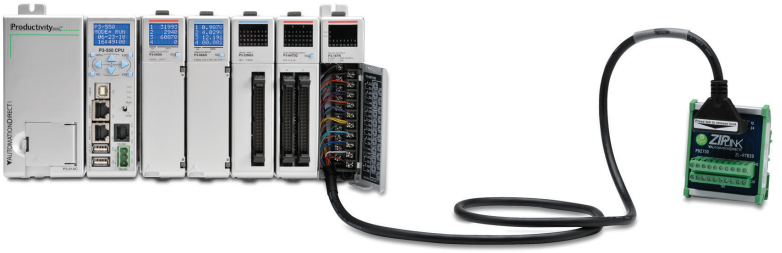

Solution 2: *Direct*LOGIC, CLICK, Productivity2000 and Productivity3000 I/O Modules to 3rd Party Devices

When wanting to connect I/O to another device within close proximity of the I/O modules, no extra terminal blocks are necessary when using the ***ZIP***Link Pigtail Cables. ***ZIP***Link Pigtail Cables are prewired to an I/O terminal block with color-coded pigtail with soldered-tip wires on the other end.

Use the I/O Modules to 3rd Party Devices selector tables located in the ***ZIP***Link Wiring Solutions section to:

1. Locate your CPU I/O module, and
2. Select a ***ZIP***Link Pigtail Cable that is compatible with your 3rd party device.

Solution 3: GS Series and DuraPulse Drives Communication Cables

Need to communicate via Modbus RTU to a drive or a network of drives?

ZIPLink cables are available in a wide range of configurations for connecting to CPUs, *SureServo*, *Sure*Step, Stellar Soft Starter and AC drives. Add a ***ZIP***Link communications module to quickly and easily set up a multi-device network.

Use the Drives Communication selector tables located in the ***ZIP***Link Wiring Solutions section to:

1. Locate your Drive and type of communications, and
2. Select a ***ZIP***Link cable and other associated hardware.

Wiring Solutions

Solution 4: Serial Communications Cables

ZIPLink offers communications cables for use with ***Direct***LOGIC, CLICK, Productivity2000 and Productivity3000 CPUs, that can also be used with other communications devices. Connections include a 6-pin RJ12 or 9-pin, 15-pin and 25-pin D-Sub connectors which can be used in conjunction with the RJ12 or D-Sub Feedthrough modules.

Using the Serial Communications Cables selector table located in the ***ZIP***Link Wiring Solutions section,

1. Locate your connector type
2. Select a cable.

Solution 5: Specialty *ZIP*Link Modules

For additional application solutions, ***ZIP***Link Specialty Modules are available in a variety of configurations including stand-alone relays, 24VDC and 120VAC transorb modules, D-Sub and RJ12 feedthrough modules, communication port adapter and distribution modules, and SureServo 50-pin I/O interface connection.

Using the ***ZIP***Link Specialty Modules selector table located in the ***ZIP***Link Wiring Solutions section:

1. Locate the type of application.
2. Select a ***ZIP***Link module.

Solution 6: *ZIP*Link Connector Modules to 3rd Party Devices

If you need a way to connect your device to terminal blocks without all that wiring time, then our pigtail cables with color-coded soldered-tip wires are a good solution. Used in conjunction with any compatible ***ZIP***Link Connector Modules, a pigtail cable keeps wiring clean and easy and reduces troubleshooting time.

Use the Universal Connector Modules and Pigtail Cables table located in the ***ZIP***Link Wiring Solutions section to:

1. Select module type,
2. Select the number of pins,
3. Select cable.

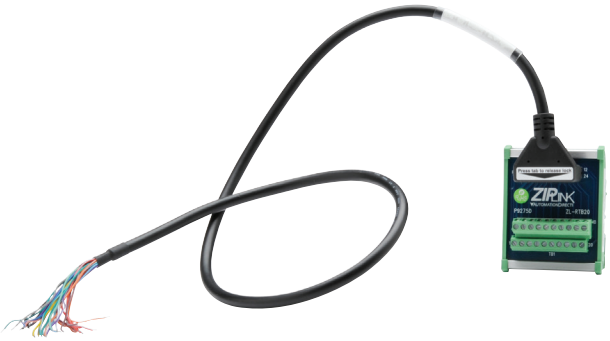

CPU I/O Modules to *ZIP*Link Connector Modules - Productivity2000

Discrete Input Modules

Productivity2000 Input Module *ZIP*Link Selector				
I/O Input Module	*ZIP*Link			
	# of Terms	Component	Part No.	Cable Part No.
P2-08ND3	18	Feedthrough	ZL-RTB20 (-1)	ZL-P2-CBL18 *
P2-16ND3		Sensor/LED	ZL-LTB16-24-1	
P2-08NE3		Feedthrough	ZL-RTB20 (-1)	
P2-16NE3		Sensor/LED	ZL-LTB16-24-1	
P2-32ND3	40	Feedthrough	ZL-RTB40 (-1)	ZL-CBL40 *
		Sensor/LED	ZL-LTB32-24-1	
P2-32NE3	40	Feedthrough	ZL-RTB40 (-1)	
		Sensor/LED	ZL-LTB32-24-1	
P2-08NAS	8	Feedthrough	ZL-RTB20 (-1)	ZL-P2-CBL18 *
P2-16NA	18			

Specialty Modules

Productivity2000 Specialty & Motion Modules *ZIP*Link Selector				
I/O Module	*ZIP*Link			
	# of Terms	Component	Part No.	Cable Part No.
P2-HSI	40	Feedthrough	ZL-RTB40 (-1)	ZL-CBL40 *S
P2-HSO				
P2-08SIM	See Note 1			
P2-SCM				

Discrete Output Modules

Productivity2000 Output Module *ZIP*Link Selector				
I/O Output Module	*ZIP*Link			
	# of Terms	Component	Part No.	Cable Part No.
P2-08TD1S	8	Feedthrough	ZL-RTB20 (-1)	ZL-P2-CBL18 *
P2-08TD2S	8			
P2-15TD1	15			
P2-15TD2	15			
P2-08TD1P	18			
P2-08TD2P	18			
P2-08TRS	18			
P2-08TAS	18			
P2-16TA	18	Feedthrough	ZL-RTB20 (-1)	
		Fuse	ZL-RFU20 [2]	
P2-16TD1P	18	Feedthrough	ZL-RTB20 (-1)	
		Relay (Sourcing)	ZL-RRL16-24-1 ZL-RRL16W-24-1 ZL-RRL16F-24-1 ZL-RRL16HDF-24-1	
P2-16TD2P	18	Feedthrough	ZL-RTB20 (-1)	
		Relay (Sinking)	ZL-RRL16-24-2 ZL-RRL16W-24-2 ZL-RRL16F-24-2 ZL-RRL16HDF-24-2	
P2-32TD1P	32	Feedthrough	ZL-RTB40 (-1)	ZL-CBL40 *
P2-32TD2P	32			
P2-16TR	18	Feedthrough	ZL-RTB20 (-1)	ZL-P2-CBL18 *
		Fuse	ZL-RFU20 [2]	

** Select the cable length by replacing the * with: Blank = 0.5 m, -1 = 1.0 m, or -2 = 2.0 m.*

[1] *These modules are not supported by the **ZIP**Link wiring system*

[2] *Note: Fuses (5 x 20 mm) are not included. See Edison Electronic Fuse section for (5 x 20 mm) fuse. S500 and GMA electronic circuit protection for fast-acting maximum protection. S506 and GMC electronic circuit protection for time-delay performance. Ideal for inductive circuits.*
*To ensure proper operation, do not exceed the voltage and current rating of **ZIP**Link module. ZL-RFU20 = 2A per circuit; ZL-RFU40 = 400 mA per circuit.*

CPU I/O Modules to *ZIP*Link Connector Modules - Productivity2000

Analog Input Modules

Productivity2000 Analog Input Module *ZIP*Link Selector				
I/O Analog Module	*ZIP*Link			
	# of Terms	Component	Part No.	Cable Part No.
P2-04AD	18	Feedthrough	ZL-RTB20 (-1)	ZL-P2-CBL18 *
P2-08AD-1				
P2-08AD-2				
P2-08ADL-1				
P2-08ADL-2				
P2-16AD-1	24			ZL-P2-CBL24 *
P2-16AD-2				
P2-16ADL-1				
P2-16ADL-2				
P2-06RTD	Matched Only	See Note 1		
P2-08THM	T/C Wire Only	See Note 1		
P2-08NTC	Copper Conductors	See Note 1		

** Select the cable length by replacing the * with: Blank = 0.5 m, -1 = 1.0 m, or -2 = 2.0 m.*

[1] *These modules are not supported by the ZIP*Link *wiring system.*

Analog Output Modules

Productivity2000 Analog Output Module *ZIP*Link Selector				
I/O Analog Module	*ZIP*Link			
	# of Terms	Component	Part No.	Cable Part No.
P2-04DA	18	Feedthrough	ZL-RTB20 (-1)	ZL-P2-CBL18 *
P2-04DAL-1				
P2-04DAL-2				
P2-08DA-1				
P2-08DA-2				
P2-08DAL-1				
P2-08DAL-2				
P2-16DA-1	24			ZL-P2-CBL24 *
P2-16DA-2				
P2-16DAL-1				
P2-16DAL-2				
P2-8AD4DA-1	18			ZL-P2-CBL18 *
P2-8AD4DA-2				

Prices as of April 27, 2016. Check Web site for most current prices.

Analog Output Modules

P2-08DA-1 $269.00

Current Analog Output

The P2-08DA-1 Current Analog Output Module provides eight channels of 4 to 20 mA sourcing outputs.

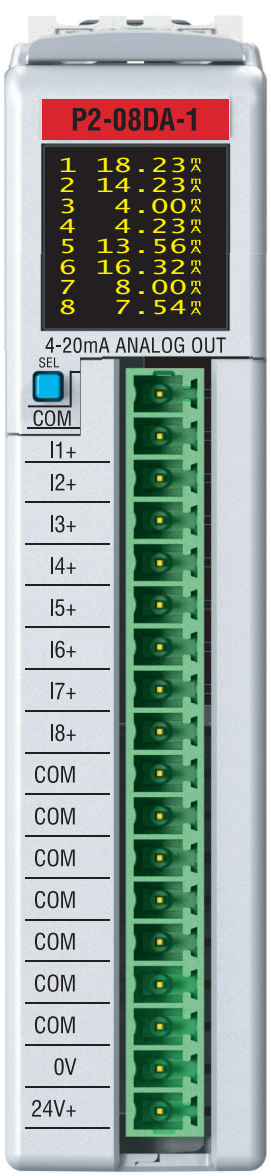

Terminal block sold separately.

Output Specifications

Output Channels (Commons)	8
Module Signal Output Range	4–20mA
Output Signal Resolution	16-bit
Resolution Value of LSB (least significant bit)	4–20mA = 0.244 µA/count 1 LSB = 1 count
Data Range	0 to 65535 counts
Output Type (sourcing)	Current: 20mA max
Output Value in Fault Mode	Near 0mA
Load Impedance (Minimum External Power Supply)	0–570Ω (19.2 VDC) 0–690Ω (21.6 VDC) 0–810Ω (24VDC) 0–930Ω (26.4 VDC) 0–1100Ω (30VDC) Minimum Load 0–125Ω @ 0–45°C 250–715Ω @ 0–60°C
Maximum Inductive Load	1mH
Allowed Load Type	Grounded
Maximum Inaccuracy	0.1% of range (Counts TBD) (including temperature drift)
Maximum Full Scale Calibration Error (not including offset error)	±0.025% of range maximum
Maximum Offset Calibration Error	±0.025% of range maximum
Accuracy vs. Temperature	±25PPM/°C max full scale calibration change (±0.0025% of range/°C)
Max Crosstalk	-96dB, 1 LSB
Linearity Error (End to End)	±16 LSB maximum (±0.025% of full scale) Monotonic with no missing codes
Output Stability and Repeatability	±10 count after 10 minute warm-up (typical)
Output Ripple	0.05% of full scale
Output Setting Time	300µs max, 5µs min (full scale change)
All Channel Update Rate	600µs
Maximum Continuous Overload	Outputs open circuit protected
Type of Output Protection	Electronically current limited to 20mA or less
Output Signal (power-up,-down)	4mA
External DC Power Required	24VDC @ 220mA (Loop Power Included)

Removable Terminal Block Specifications

Part Number	P2-RTB	P2-RTB-1
Number of positions	18 Screw Terminals	18 Spring Clamp Terminals
Wire Range	30–16 AWG (0.051–1.31 mm²) Solid / Stranded Conductor 3/64 in (1.2 mm) Insulation Maximum 1/4 in (6–7 mm) Strip Length	28-16 AWG (0.081–1.31 mm²) Solid / Stranded Conductor 3/64 in (1.2 mm) Insulation Maximum 19/64 in (7–8 mm) Strip Length
Conductors	"USE COPPER CONDUCTORS, 75ºC" or equivalent.	
Screw Driver Width	1/8 in (3.8 mm) Maximum	
Screw Size	M2	N/A
Screw Torque	2.5 lb·in (0.28 N·m)	N/A

We recommend using prewired ***ZIP***Link cables and connection modules. See Wiring Solutions.

If you wish to hand-wire your module, a removable terminal block is sold separately. Order part number P2-RTB or. P2-RTB-1.

Analog Output Modules

P2-08DA-1 (cont'd)

General Specifications	
Operating Temperature	0º to 60ºC (32º to 140ºF)
Storage Temperature	-20º to 70ºC (-4º to 158ºF)
Humidity	5 to 95% (non-condensing)
Environmental Air	No corrosive gases permitted
Vibration	IEC60068-2-6 (Test Fc)
Shock	IEC60068-2-27 (Test Ea)
Field to Logic Side Isolation	1800VAC applied for 1 second
Insulation Resistance	>10MΩ @ 500VDC
Heat Dissipation	700mW
Enclosure Type	Open Equipment
Module Keying to Backplane	Electronic
Module Location	Any I/O slot in a Productivity2000 System
Field Wiring	Use ***ZIP***Link Wiring System or removable terminal block (not included). See Wiring Solutions.
EU Directive	See the "EU Directive" topic in the Productivity Suite Help File. Information can also be obtained at: www.productivity2000.com
Connector Type (Sold separately)	18-position removable terminal block
Weight	90g (3.2 oz)
Agency Approvals**	UL508 File E139594, Canada & USA CE (EN61131-2*)

*Meets EMC and Safety requirements. See the Declaration of Conformity for details.
**To obtain the most current agency approval information, see the Agency Approval Checklist section on the specific component part number web page.

Wiring Diagrams

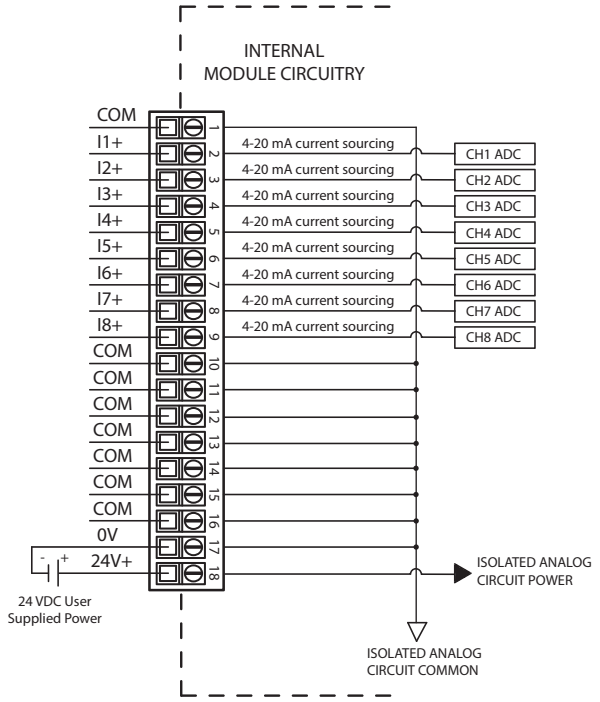

Current Source Output Circuit

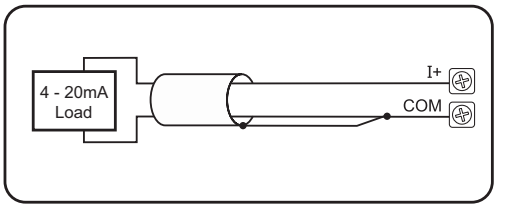

Wiring I/O Modules

There are two available methods for wiring most I/O modules: The ***ZIP***Link wiring system or hand wiring to the optional removable I/O module terminal blocks.

Note: Thermocouple and RTD modules are not compatible with the ***ZIP***Link system and are shipped with the optional terminal blocks included.

*ZIP*Links Wiring Systems

For wiring I/O modules, we strongly recommend using pre-wired ***ZIP***Links wiring systems, which eliminate the need for hand wiring modules to terminal blocks.

See the selection matrix guide on the following pages.

***ZIP*Link Pre-Wired Terminal Block Cable**

***ZIP*Link Pigtail Cable**

***ZIP*Link Module**

Removable Terminal Blocks

For most I/O modules you can also purchase a removable terminal block (part no. P2-RTB or P2-RTB-1).

Note: P2-RTB supplied with Thermocouple and RTD modules.

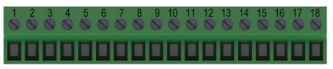

Removable Terminal Block P2-RTB

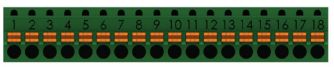

Removable Terminal Block P2-RTB-1

Terminal Block Removal

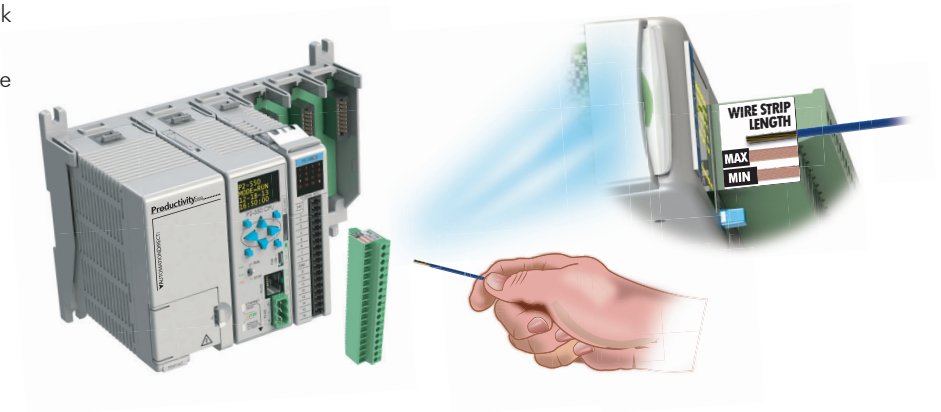

Wiring Solutions

Wiring Solutions using the *ZIP*Link Wiring System

ZIPLinks eliminate the normally tedious process of wiring between devices by utilizing prewired cables and DIN rail mount connector modules. It's as simple as plugging in a cable connector at either end and terminating wires at only one end. Prewired cables keep installation clean and efficient, using half the space at a fraction of the cost of standard terminal blocks. There are several wiring solutions available when using the ***ZIP***Link System ranging from CPU I/O-to-***ZIP***Link Connector Modules that are ready for field termination, options for connecting to third party devices, GS Series, DuraPulse and SureServo Drives, and specialty relay, transorb and communications modules. Pre-printed I/O-specific adhesive label strips for quick marking of ***ZIP***Link modules are provided with ***ZIP***Link cables. See the following solutions to help determine the best ***ZIP***Link system for your application.

Solution 1: DirectLOGIC, CLICK, Productivity2000 and Productivity3000 I/O Modules to *ZIP*Link Connector Modules

When looking for quick and easy I/O-to-field termination, a ***ZIP***Link connector module used in conjunction with a prewired ***ZIP***Link cable, consisting of an I/O terminal block at one end and a multi-pin connector at the other end, is the best solution.

Use the CPU I/O Modules to ***ZIP***Link Connector Modules selector tables located in the ***ZIP***Link Wiring Solutions section to:

1. Locate your I/O module/CPU,
2. Select a ***ZIP***Link Module, and
3. Select a corresponding ***ZIP***Link Cable.

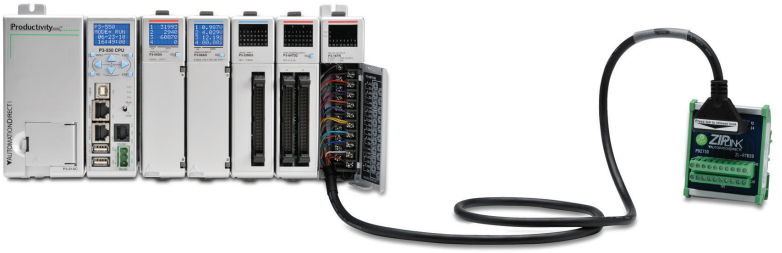

Solution 2: *Direct*LOGIC, CLICK, Productivity2000 and Productivity3000 I/O Modules to 3rd Party Devices

When wanting to connect I/O to another device within close proximity of the I/O modules, no extra terminal blocks are necessary when using the ***ZIP***Link Pigtail Cables. ***ZIP***Link Pigtail Cables are prewired to an I/O terminal block with color-coded pigtail with soldered-tip wires on the other end.

Use the I/O Modules to 3rd Party Devices selector tables located in the ***ZIP***Link Wiring Solutions section to:

1. Locate your CPU I/O module, and
2. Select a ***ZIP***Link Pigtail Cable that is compatible with your 3rd party device.

Solution 3: GS Series and DuraPulse Drives Communication Cables

Need to communicate via Modbus RTU to a drive or a network of drives?

ZIPLink cables are available in a wide range of configurations for connecting to CPUs, *SureServo*, *Sure*Step, Stellar Soft Starter and AC drives. Add a ***ZIP***Link communications module to quickly and easily set up a multi-device network.

Use the Drives Communication selector tables located in the ***ZIP***Link Wiring Solutions section to:

1. Locate your Drive and type of communications, and
2. Select a ***ZIP***Link cable and other associated hardware.

Wiring Solutions

Solution 4: Serial Communications Cables

ZIPLink offers communications cables for use with ***Direct***LOGIC, CLICK, Productivity2000 and Productivity3000 CPUs, that can also be used with other communications devices. Connections include a 6-pin RJ12 or 9-pin, 15-pin and 25-pin D-Sub connectors which can be used in conjunction with the RJ12 or D-Sub Feedthrough modules.

Using the Serial Communications Cables selector table located in the ***ZIP***Link Wiring Solutions section,

1. Locate your connector type
2. Select a cable.

Solution 5: Specialty *ZIP*Link Modules

For additional application solutions, ***ZIP***Link Specialty Modules are available in a variety of configurations including stand-alone relays, 24VDC and 120VAC transorb modules, D-Sub and RJ12 feedthrough modules, communication port adapter and distribution modules, and SureServo 50-pin I/O interface connection.

Using the ***ZIP***Link Specialty Modules selector table located in the ***ZIP***Link Wiring Solutions section:

1. Locate the type of application.
2. Select a ***ZIP***Link module.

Solution 6: *ZIP*Link Connector Modules to 3rd Party Devices

If you need a way to connect your device to terminal blocks without all that wiring time, then our pigtail cables with color-coded soldered-tip wires are a good solution. Used in conjunction with any compatible ***ZIP***Link Connector Modules, a pigtail cable keeps wiring clean and easy and reduces troubleshooting time.

Use the Universal Connector Modules and Pigtail Cables table located in the ***ZIP***Link Wiring Solutions section to:

1. Select module type,
2. Select the number of pins,
3. Select cable.

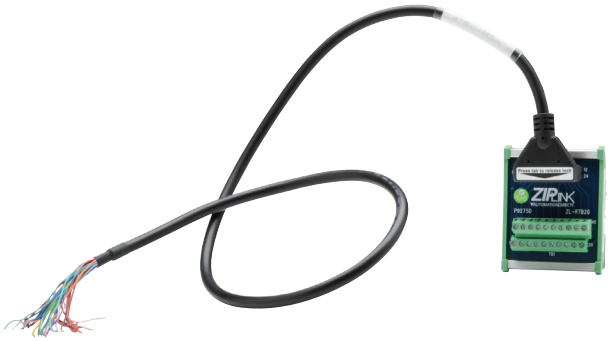

CPU I/O Modules to *ZIP*Link Connector Modules - Productivity2000

Discrete Input Modules

Productivity2000 Input Module *ZIP*Link Selector				
I/O Input Module	*ZIP*Link			
	# of Terms	Component	Part No.	Cable Part No.
P2-08ND3	18	Feedthrough	ZL-RTB20 (-1)	ZL-P2-CBL18 *
P2-16ND3		Sensor/LED	ZL-LTB16-24-1	
P2-08NE3		Feedthrough	ZL-RTB20 (-1)	
P2-16NE3		Sensor/LED	ZL-LTB16-24-1	
P2-32ND3	40	Feedthrough	ZL-RTB40 (-1)	ZL-CBL40 *
		Sensor/LED	ZL-LTB32-24-1	
P2-32NE3	40	Feedthrough	ZL-RTB40 (-1)	
		Sensor/LED	ZL-LTB32-24-1	
P2-08NAS	8	Feedthrough	ZL-RTB20 (-1)	ZL-P2-CBL18 *
P2-16NA	18			

Specialty Modules

Productivity2000 Specialty & Motion Modules *ZIP*Link Selector				
I/O Module	*ZIP*Link			
	# of Terms	Component	Part No.	Cable Part No.
P2-HSI	40	Feedthrough	ZL-RTB40 (-1)	ZL-CBL40 *S
P2-HSO				
P2-08SIM	See Note 1			
P2-SCM				

Discrete Output Modules

Productivity2000 Output Module *ZIP*Link Selector				
I/O Output Module	*ZIP*Link			
	# of Terms	Component	Part No.	Cable Part No.
P2-08TD1S	8	Feedthrough	ZL-RTB20 (-1)	ZL-P2-CBL18 *
P2-08TD2S	8			
P2-15TD1	15			
P2-15TD2	15			
P2-08TD1P	18			
P2-08TD2P	18			
P2-08TRS	18			
P2-08TAS	18			
P2-16TA	18	Feedthrough	ZL-RTB20 (-1)	
		Fuse	ZL-RFU20 [2]	
P2-16TD1P	18	Feedthrough	ZL-RTB20 (-1)	
		Relay (Sourcing)	ZL-RRL16-24-1 ZL-RRL16W-24-1 ZL-RRL16F-24-1 ZL-RRL16HDF-24-1	
P2-16TD2P	18	Feedthrough	ZL-RTB20 (-1)	
		Relay (Sinking)	ZL-RRL16-24-2 ZL-RRL16W-24-2 ZL-RRL16F-24-2 ZL-RRL16HDF-24-2	
P2-32TD1P	32	Feedthrough	ZL-RTB40 (-1)	ZL-CBL40 *
P2-32TD2P	32			
P2-16TR	18	Feedthrough	ZL-RTB20 (-1)	ZL-P2-CBL18 *
		Fuse	ZL-RFU20 [2]	

** Select the cable length by replacing the * with: Blank = 0.5 m, -1 = 1.0 m, or -2 = 2.0 m.*

[1] *These modules are not supported by the **ZIP**Link wiring system*

[2] *Note: Fuses (5 x 20 mm) are not included. See Edison Electronic Fuse section for (5 x 20 mm) fuse. S500 and GMA electronic circuit protection for fast-acting maximum protection. S506 and GMC electronic circuit protection for time-delay performance. Ideal for inductive circuits.*
*To ensure proper operation, do not exceed the voltage and current rating of **ZIP**Link module. ZL-RFU20 = 2A per circuit; ZL-RFU40 = 400 mA per circuit.*

CPU I/O Modules to *ZIP*Link Connector Modules - Productivity2000

Analog Input Modules

Productivity2000 Analog Input Module *ZIP*Link Selector				
I/O Analog Module	*ZIP*Link			
	# of Terms	Component	Part No.	Cable Part No.
P2-04AD	18	Feedthrough	ZL-RTB20 (-1)	ZL-P2-CBL18 *
P2-08AD-1				
P2-08AD-2				
P2-08ADL-1				
P2-08ADL-2				
P2-16AD-1	24			ZL-P2-CBL24 *
P2-16AD-2				
P2-16ADL-1				
P2-16ADL-2				
P2-06RTD	Matched Only	See Note 1		
P2-08THM	T/C Wire Only	See Note 1		
P2-08NTC	Copper Conductors	See Note 1		

** Select the cable length by replacing the * with: Blank = 0.5 m, -1 = 1.0 m, or -2 = 2.0 m.*

[1] *These modules are not supported by the ZIP*Link *wiring system.*

Analog Output Modules

Productivity2000 Analog Output Module *ZIP*Link Selector				
I/O Analog Module	*ZIP*Link			
	# of Terms	Component	Part No.	Cable Part No.
P2-04DA	18	Feedthrough	ZL-RTB20 (-1)	ZL-P2-CBL18 *
P2-04DAL-1				
P2-04DAL-2				
P2-08DA-1				
P2-08DA-2				
P2-08DAL-1				
P2-08DAL-2				
P2-16DA-1	24			ZL-P2-CBL24 *
P2-16DA-2				
P2-16DAL-1				
P2-16DAL-2				
P2-8AD4DA-1	18			ZL-P2-CBL18 *
P2-8AD4DA-2				

I/O Modules

A variety of discrete, analog and specialty I/O modules are available for use in a Productivity2000 System. Specifications for each module are on the following pages.

A filler module is available for unused I/O module slots (part number P2-FILL).

Discrete Input Modules

Productivity2000 Discrete Input Modules			
Part Number	Number of Inputs	Description	Price
P2-08SIM	8	Input Simulator Module	$47.00
P2-08ND3	8	Sinking/Sourcing 12–24 VDC	$46.00
P2-08NE3	8	Sinking/Sourcing 24V AC/DC	$40.00
P2-16ND3	16	Sinking/Sourcing 12–24 VDC	$69.00
P2-16NE3	16	Sinking/Sourcing 24V AC/DC	$69.00
P2-32ND3	32	Sinking/Sourcing 24 VDC	$99.00
P2-32NE3	32	Sinking/Sourcing 24V AC/DC	$99.00
P2-08NAS	8	AC Isolated 100-120 VAC	$77.00
P2-16NA	16	AC 100-240 VAC	$105.00

Analog Input Modules

Productivity2000 Analog Input Modules			
Part Number	Number of Channels	Description	Price
P2-04AD	4	Analog Input (Voltage/Current)	$195.00
P2-08AD-1	8	Analog Input (Current)	$199.00
P2-08AD-2	8	Analog Input (Voltage)	$219.00
*P2-08ADL-1**	8	Analog Input (Current)	$143.00
*P2-08ADL-2**	8	Analog Input (Voltage)	$157.50
P2-16AD-1	16	Analog Input (Current)	$249.00
P2-16AD-2	16	Analog Input (Voltage)	$275.00
*P2-16ADL-1**	16	Analog Input (Current)	$178.00
*P2-16ADL-2**	16	Analog Input (Voltage)	$196.00
P2-06RTD	6	Analog RTD Input	$325.00
P2-08THM	8	Analog Thermocouple Input	$329.00
P2-08NTC	8	Analog Thermistor Input	$265.00

Analog Output Modules

Productivity2000 Analog Output Modules			
Part Number	Number of Channels	Description	Price
P2-04DA	4	Analog Output (Voltage/Current)	$194.00
*P2-04DAL-1**	4	Analog Output (Current)	$110.00
*P2-04DAL-2**	4	Analog Output (Voltage)	$101.00
P2-08DA-1	8	Analog Output (Current)	$269.00
P2-08DA-2	8	Analog Output (Voltage)	$249.00
*P2-08DAL-1**	8	Analog Output (Current)	$202.00
*P2-08DAL-2**	8	Analog Output (Voltage)	$195.50
P2-16DA-1	16	Analog Output (Current)	$354.00
P2-16DA-2	16	Analog Output (Voltage)	$339.00
*P2-16DAL-1**	16	Analog Output (Current)	$253.00
*P2-16DAL-2**	16	Analog Output (Voltage)	$243.00

* Low resolution analog modules without OLED display.

Discrete Output Modules

Productivity2000 Discrete Output Modules			
Part Number	Number of Outputs	Description	Price
P2-08TD1S	8	Isolated Sinking	$47.00
P2-08TD2S	8	Isolated Sourcing	$47.00
P2-15TD1	15	Sinking	$65.00
P2-15TD2	15	Sourcing	$65.00
P2-08TD1P	8	Sinking Protected	$41.00
P2-08TD2P	8	Sourcing Protected	$41.00
P2-16TD1P	16	Sinking Protected	$69.00
P2-16TD2P	16	Sourcing Protected	$69.00
P2-32TD1P	32	Sinking Protected	$99.00
P2-32TD2P	32	Sourcing Protected	$99.00
P2-08TAS	8	Isolated AC	$105.00
P2-16TA	16	100-240 VAC Output	$129.00
P2-08TRS	8	Isolated Relay	$51.00
P2-16TR	16	Relay	$95.00

Productivity2000 Analog Input/Output Modules			
Part Number	Number of Channels	Description	Price
P2-8AD4DA-1	8/4	Analog Input/Output (Current)	$310.00
P2-8AD4DA-2	8/4	Analog Input/Output (Voltage)	$310.00

Specialty Modules

Productivity2000 Specialty Modules			
Part Number	Number of Channels	Description	Price
*P2-HSI***	2	High-Speed Input	$195.00
*P2-HSO***	2	High-Speed Output	$195.00
P2-SCM	4 ports	Serial Communications Module	$165.00

** ***ZIP***Link required.

I/O Module Installation Procedure

WARNING: Do not apply field power until the following steps are completed. See hot-swapping procedure for exceptions.

Step One: Align module catch with base slot and rotate module into connector.

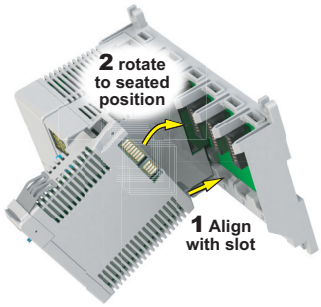

Step Two: Pull top locking tab toward module face. Click indicates lock is engaged.

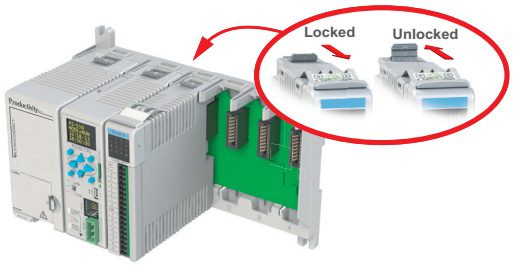

Step Three: Attach field wiring using removable terminal block or *ZIP*Link *wiring system*.

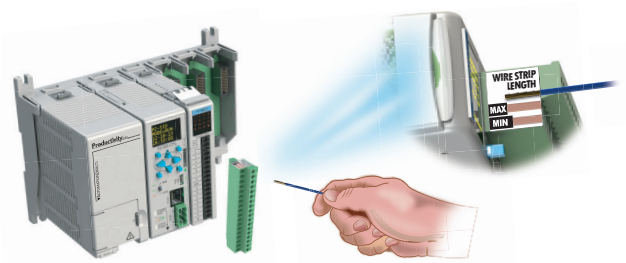

WARNING: Explosion hazard – Do not connect or disconnect connectors or operate switches while circuit is live unless the area is known to be non-hazardous. Do not hot-swap modules unless the area is known to be non-hazardous.

Prices as of April 27, 2016. Check Web site for most current prices.

Input Simulator & Filler Module

P2-08SIM $165.00

Input Simulator Module

The P2-08SIM Input Simulator module provides 8 toggle switches to simulate input devices.

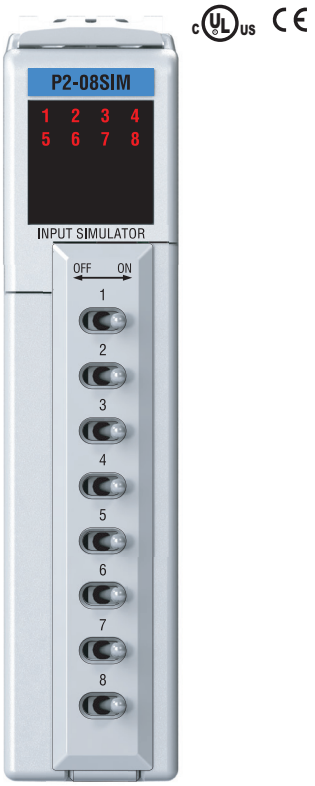

Input Specifications

Inputs per Module	8 Internal switches
OFF to ON Response	Max. 20ms
ON to OFF Response	Max. 20ms
Status Indicators	Logic Side (8 points)

General Specifications

Operating Temperature	0° to 60°C (32° to 140°F)
Storage Temperature	-20° to 70°C (-4° to 158°F)
Humidity	5 to 95% (non-condensing)
Environmental Air	No corrosive gases permitted
Vibration	IEC60068-2-6 (Test Fc)
Shock	IEC60068-2-27 (Test Ea)
Heat Dissipation	200mW
Enclosure Type	Open Equipment
Module Location	Any I/O slot in a Productivity2000 System.
EU Directive	See the "EU Directive" topic in the Productivity Suite Help File. Information can also be obtained at: www.productivity2000.com
Weight	90g (3.2 oz.)
Agency Approvals**	UL508 file E139594, Canada & USA CE (EN61131-2*)

* Meets EMC and Safety requirements. See the D.O.C. for details.
**For complete system limits, please refer to the "Hardware and Communication Limits" table in the Productivity Suite online "Help" file "Hardware Configuration", topic P050.

P2-FILL $11.00

Filler Module

The P2-FILL filler module protects unused I/O module slots in the base.

MODEL #: 32025-8

ETHERNET SWITCH

RocketLinx® ES8105

Part Number: 32025-8

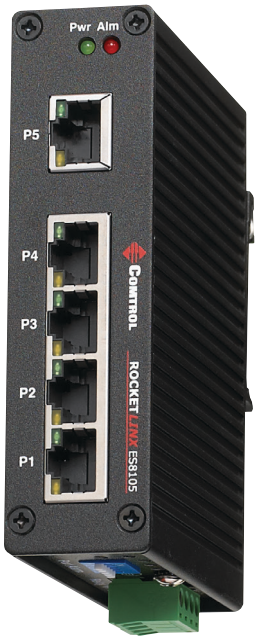

KEY FEATURES AND BENEFITS

- Compact industrial Fast Ethernet switch
- Five - 10/100BASE-TX ports
- 3.2Gbps Switch Fabric
- AC or DC power input (18 to 32VDC or 18 to 27VAC)
- DIN rail or wall-mount installation
- -25° to +70° C extended operating temperature for extreme environments
- Alarm relay output for port event notifications
- Aluminum metal case with IP31 grade protection for drip-proof and dustproof protection
- Supports 1.5KV Hi-Pot isolation protection
- Plug-and-play
- RoHS2 compliant under CE
- UL listed

PRODUCT DESCRIPTION

The RocketLinx ES8105 is a compact 5-port Fast Ethernet industrial switch featuring a 3.2Gbps switch fabric with Store and Forward technology, and housed in a slim industrial enclosure to save rail or panel space in compact system designs.

For installation in hazardous or industrial environments, the RocketLinx ES8105 features an extended operating temperature range (-25° to 70° C) and provides IP31 protection to guard against dust and water.

The ES8105 is an unmanaged switch that requires no user setup and immediately starts operating as soon as power is applied for true “plug-and-play” operation. The RocketLinx ES8105 supports 18 to 27VAC or 18 to 32VDC power inputs and provides built-in reverse power polarity protection.

For ease-of-maintenance, the RocketLinx ES8105 has one alarm relay that is controlled by a DIP switch to assist engineers with on-site notifications in the case of link-down events.

RocketLinx Reliability

With the 1.5KV Hi-Pot isolation protection, CE/FCC/UL regulatory approvals, high MTBF, a 5-year warranty, and rugged aluminum design, the RocketLinx ES8105 is the ideal switch solution for industrial and hazardous environments.

ROCKETLINX SPECIFICATIONS

HARDWARE

Network Interface	10/100BASE-TX
Enclosure	
IP31 Grade Aluminum Metal Case	
Drop-Waterproof and Dustproof	
Installation Method	
DIN rail	
LED Indicators	
Power, Alarm, 10Mbps Link/Activity, 100Mbps Link/Activity	
Dimensions	3.9" x 1.2" x 4.4" 99 x 30.5 x 112 mm
Product Weight	0.65 lbs 0.295 kg

TECHNOLOGY

Standard	
IEEE 802.3 10BASE-T	
IEEE 802.3u 100BASE-TX	
Switch Technology	
3.2Gpbs switch fabric	
Store and forward technology	
Aggregate System Throughput	1.49Mbps
Flow Control	
IEEE 802.3x Flow control	

ETHERNET SPECIFICATIONS

Connector Type	RJ45
Number of Ports	5
Cable Types	
Cat 3, Cat 4, Cat 5, Cat 5e (UTP or STP)	
Link Distance	100 Meters
Port Type	
10/100BASE-TX	
Auto MDI/MDIX, auto-negotiation	
Port Failure Alarm	
Yes	
DIP switch enabled	
Relay Rating	1A Max. @ 24VDC

ELECTRICAL SPECIFICATIONS

Device	
Power Input	AC or DC
DC Input Voltage	18 to 32VDC
Current Consumption +24VDC	130mA
AC Input Voltage	18 to 27VAC, 47 to 63
HZ Power Consumption (Max)	3W
Number of Power Connectors	1
Power Connector Type	
4-Pin Screw Terminal Block	
Reverse Polarity Protection	Yes

ENVIRONMENTAL SPECIFICATIONS

Air temperature	
System On	-25° to +70° C
System Off	-40° to +85° C
MTBF	
(Mean Time Between Failures)	93.45 years
Operating Humidity	
(non-condensing)	0% to 95%
Storage Humidity	0% to 95%

EXPORT INFORMATION

Packaged Shipping Weight	0.90 lbs 0.41 kg
Package Dimensions	6.0" x 2.5" x 5.0" 15.24 x 6.35 x 12.7 cm
UPC Code	7-56727-32025-8
ECCN	5A991
Schedule B Number	8517.62.0050

REGULATORY APPROVALS

Emissions
- Canadian EMC Requirements
  - ICES-003
- European Standard EN55022
- CISPR 22
- FCC Part 15 Subpart B
  - Class A limit

Immunity
- European Standard EN55024
- IEC 1000-4-2/EN61000-4-2: ESD
- IEC 1000-4-3/EN61000-4-3: RF
- IEC 1000-4-4/EN61000-4-4: Fast Transient/Burst
- IEC 1000-4-5/EN61000-4-5: Surge
- IEC 1000-4-6/EN61000-4-6: Conducted Disturbance
- IEC 1000-4-8/EN61000-4-8: Magnetic Field
- IEC 1000-4-11/EN61000-4-11: DIPS and Voltage

Variations

Safety
- IEC 60950/EN60950 (LISTED)
  - CSA C22.2 No. 60950/UL60950 Third Edition

Other
- RoHS2 compliant

REGULATORY APPROVALS

RECOMMENDED PRODUCTS

32100-2	Power Supply PS1020 Universal (24V, 20W, Din Rail)
32101-9	Power Supply PS1060 Universal (24V, 60W, Din Rail)
32102-6	Power Supply PS1100 Universal (24V, 100W, Din Rail)
1200038	External Power Adapter, Bare Wires (24VDC, 24W, 3-Wire)

Warranty Information
Comtrol offers a 30-day satisfaction guarantee and 5-year limited warranty.

Sales Support
+1.763.957.6000
sales@comtrol.com

Technical Support
+1.763.957.6000
www.comtrol.com/support

Email, FTP, and Web Support
info@comtrol.com
ftp.comtrol.com
www.comtrol.com

© 2014 by Comtrol Corporation. All Rights Reserved. Printed in the U.S.A. All trademarks used herein are the property of their respective trademark holders. Specifications are subject to change without notice. LT1594D

Signet 2551 Magmeter Flow Sensor

MODEL #: 3-2551-P0-42

Available in a variety of wetted materials and ideal for pipe sizes up to DN900 (36 in.)

The Signet 2551 Magmeter is an insertion style magnetic flow sensor that features no moving parts. The patented* sensor design is available in corrosion-resistant materials to provide long-term reliability with minimal maintenance costs. Material options include PP with stainless steel, PVDF with Hastelloy-C, or PVDF with Titanium. Utilizing the comprehensive line of Signet installation fittings, sensor alignment and insertion depth is automatic. These versatile, simple-to-install sensors deliver accurate flow measurement over a wide dynamic range in pipe sizes ranging from DN15 to DN900 (½ to 36 inches), satisfying the requirements of many diverse applications.

Signet 2551 Magmeters offer many output options of frequency/digital (S^3L) or 4 to 20 mA which are available on both the blind and display versions. The frequency or digital (S^3L) sensor output can be used with Signet's extensive line of flow instruments while the 4 to 20 mA output can be used for a direct input to PLCs, chart recorders, etc. Both the 4 to 20 mA output and digital (S^3L) sensor interface is available for long distance signal transmission. An additional benefit is the empty pipe detection which features a zero flow output when the sensors are not completely wetted. Also, the frequency output is bi-directional while the 4 to 20 mA output can be set for uni- or bi-directional flow using the display or the 3-0250 USB to Digital (S^3L) Configuration/Diagnostic setup tool which connects to PCs for programming capabilities.

In addition the display version of the 2551 Magmeter is available with relays and features permanent and resettable totalizer values which can be stored and seen on the display. Also, the display contains multi-languages with English, Spanish, German, French, Italian and Portuguese menu options.

Features

- **Test certificate included for -X0, -X1**
- **Patented Magmeter technology***
- **No moving parts**
- **Bi-directional flow**
- **Empty pipe detection**
- **Installs into pipe sizes DN15 to DN900 (0.5 to 36 in.)**
- **Operating range 0.05 to 10 m/s (0.15 to 33 ft/s)**
- **Accurate measurement even in dirty liquids**
- **Polypropylene or PVDF retaining nuts**
- **Blind 4 to 20 mA, digital (S^3L), frequency, relay output**
- **No pressure drop**
- **Corrosion resistant materials; PP or PVDF with SS, Hastelloy-C, or Titanium**
- **Multi-language display menu available**

LISTED
MEASURING EQUIPMENT
77CJ

Applications

- **Chemical Processing**
- **Water and Wastewater Monitoring**
- **Metal Recovery and Landfill Leachate**
- **Commercial Pools, Spas, and Aquariums**
- **HVAC**
- **Irrigation**
- **Scrubber Control**
- **Neutralization Systems**
- **Industrial Water Distribution**

* U.S. Patent No: 7,055,396 B1

Specifications

General			
Operating Range	0.05 to 10 m/s	0.15 to 33 ft/s	
Pipe Size Range	DN15 to DN900	½ in. to 36 in.	
Linearity	± 1% reading plus 0.1% of full scale		
Repeatability	±0.5% of reading @ 25 °C (77 °F)		
Minimum Conductivity	20 µS/cm		
Wetted Materials			
Sensor Body/Electrodes and Grounding Ring	-P0, -P1, -P2: PP/316L SS		
	-T0, -T1, -T2: PVDF/Titanium		
	-V0, -V1, -V2: PVDF/Hastelloy-C		
O-rings	FPM (standard) EPR (EPDM), FFPM (optional)		
Case	PBT		
Display Window	Polyamide (transparent nylon)		
Protection Rating	NEMA 4X/IP65		
Electrical			
Power Requirements	4 to 20 mA	24 VDC ±10%, regulated, 22.1 mA max.	
	Frequency	5 to 24 VDC ±10%, regulated, 15 mA max.	
	Digital (S^3L)	5 to 6.5 VDC, 15 mA max.	
Auxiliary (only required for units with relays)		9 to 24 VDC, 0.4 A max.	
Reverse Polarity and Short Circuit Protected			
Current Output 4 to 20 mA	Loop Accuracy	32 µA max. error (25 °C @ 24 VDC)	
	Isolation	Low voltage < 48 VAC/DC from electrodes and auxiliary power	
	Maximum Cable	300 m (1000 ft)	
	Error condition	22.1 mA	
	Max. Loop Resistance	300 Ω	
	Compatible with PLC, PC or similar equipment		
	4 to 20 mA load needed		
Frequency Output	Output Modes	Freq., or Mirror Relay (display version only)	
	Max. Pull-up Voltage	30 VDC	
	Max. Current Sink	50 mA, current limited	
	Maximum Cable	300 m (1000 ft)	
	Compatible with Signet Model 8550, 8900, 9900, 9900-1BC		
Digital (S^3L) Output	Serial ASCII, TTL level 9600 bps		
	Compatible with Model Signet 8900 controller		
Relay Specifications			
#1, #2 Type	Mechanical SPDT		
Rating	5 A @ 30 VDC max., 5 A @ 250 VDC max.		
#3 Type	Solid State		
	50 mA @ 30 VDC, 50 mA @ 42 VAC		
Hysteresis	User adjustable for exiting alarm condition		
Alarm On Trigger Delay	Adjustable (0 to 9999.9 sec.)		
Relay Modes	Off, Low, High, Window, and Proportional Pulse		
Relay Source	Flow Rate, Resettable Totalizer		
Error Condition	Selectable; Fail Open or Closed		
Display			
Characters		2 x 16	
Contrast		User-set in four levels	
Backlighting (only on relay versions)		Requires external 9-24 VDC, 0.4 mA max.	
Max. Temperature/Pressure Rating			
Storage Temperature		-20 °C to 70 °C	-4 °F to 158 °F
Relative Humidity		0 to 95% (non-condensing)	
Operating Temperature	Ambient	-10 °C to 70 °C	14 °F to 158 °F
	Media	0 °C to 85 °C	32 °F to 185 °F
Maximum Operating Pressure		10.3 bar @ 25 °C	150 psi @ 77 °F
		1.4 bar @ 85 °C	20 psi @ 185 °F
Shipping Weight			
	0.680 kg	1.50 lb	
Standards and Approvals			
	CE, FCC, UL, CUL (for display versions with relays)		
	RoHS compliant, China RoHS		
	NEMA 4X / IP65 Enclosure (with cap installed)		
	Manufactured under ISO 9001 for Quality and ISO 14001 for Environmental Management and OHSAS 18001 for Occupational Health and Safety		

Dimensions

Pipe Range	
1/2 to 4 in.	-X0 = 58 mm (2.3 in.)
5 to 8 in.	-X1 = 91 mm (3.6 in.)
10 to 36 in.	-X2 = 167 mm (6.6 in.)

X = Sensor Body P, T, or V

Blind version

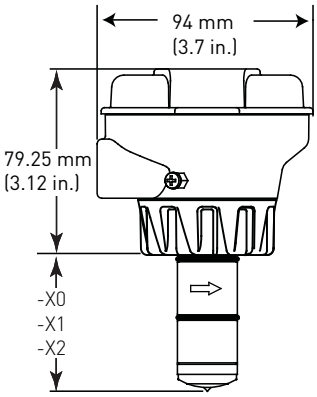

Display version

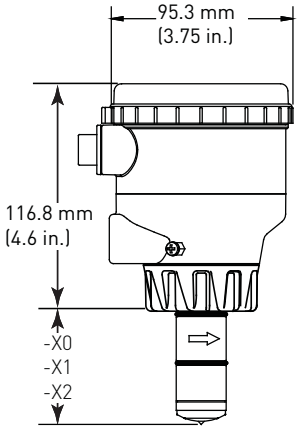

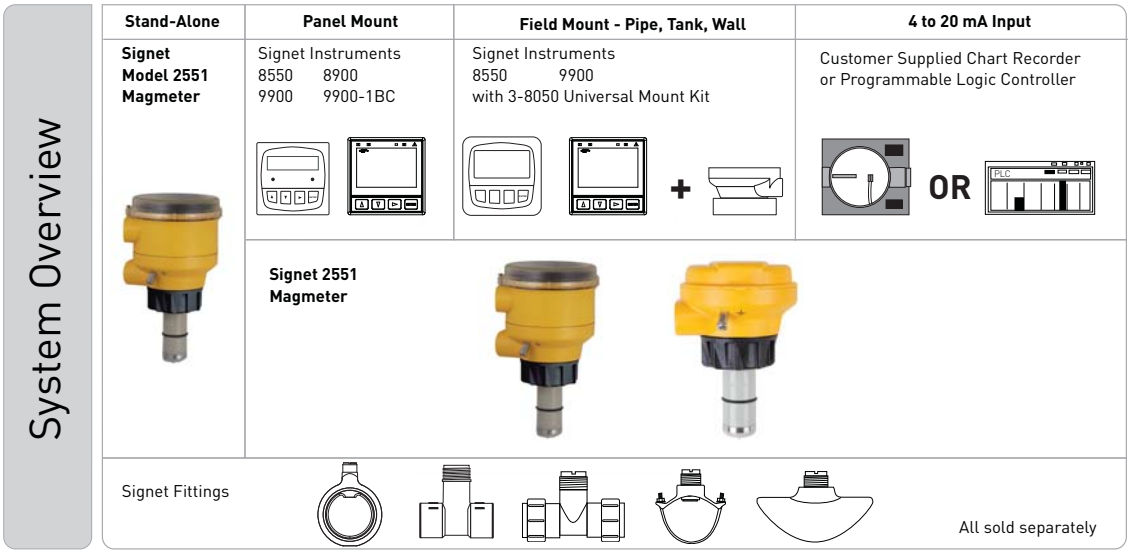

Operating Temperature/Pressure Graphs

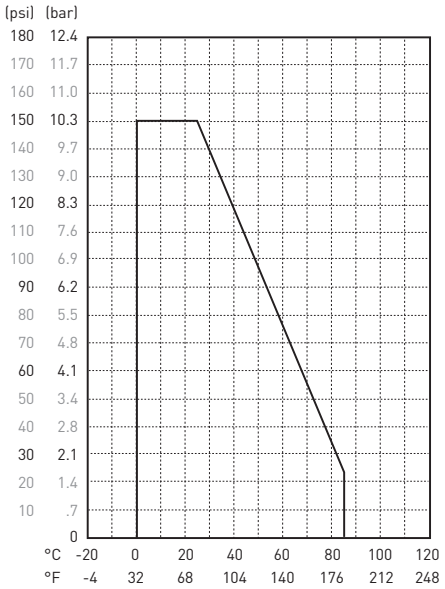

Note:
The pressure/temperature graphs are specifically for the Signet sensor. During system design the specifications of all components must be considered. In the case of a metal piping system, a plastic sensor will reduce the system specification. When using a PVDF sensor in a PVC piping system, the fitting will reduce the system specification.

Application Tips
- Note minimum process liquid conductivity requirement is 20 µs/cm.
- Install sensor using standard Signet installation fittings for best results.
- Sensor is capable of retrofitting into existing 515 and 2536 fittings.

Please refer to Wiring, Installation, and Accessories sections for more information.

Ordering Information

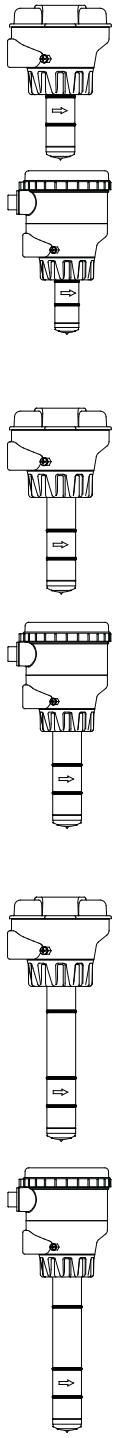

Pipe Size	Mfr. Part No.	Code	Sensor Body
Frequency or Digital (S^3L) output programmable open collector for use with any Signet Flow Instrument or the 8900 or 9900 Instruments**			
DN15 to DN100 (½ to 4 in.)			
No Display			
	3-2551-P0-11	**159 001 105**	Polypropylene and 316L SS
	3-2551-T0-11	**159 001 108**	PVDF and Titanium
	3-2551-V0-11	**159 001 257**	PVDF and Hastelloy-C
with Display, two SPDT relays, one solid state relay			
	3-2551-P0-21	**159 001 267**	Polypropylene and 316L SS
	3-2551-T0-21	**159 001 436**	PVDF and Titanium
	3-2551-V0-21	**159 001 269**	PVDF and Hastelloy-C
with display			
	3-2551-P0-41	**159 001 261**	Polypropylene and 316L SS
	3-2551-T0-41	**159 001 433**	PVDF and Titanium
	3-2551-V0-41	**159 001 263**	PVDF and Hastelloy-C
DN125 to DN200 (5 to 8 in.)			
No Display			
	3-2551-P1-11	**159 001 106**	Polypropylene and 316L SS
	3-2551-T1-11	**159 001 109**	PVDF and Titanium
	3-2551-V1-11	**159 001 258**	PVDF and Hastelloy-C
with Display, two SPDT relays, one solid state relay			
	3-2551-P1-21	**159 001 268**	Polypropylene and 316L SS
	3-2551-T1-21	**159 001 437**	PVDF and Titanium
	3-2551-V1-21	**159 001 270**	PVDF and Hastelloy-C
with Display			
	3-2551-P1-41	**159 001 262**	Polypropylene and 316L SS
	3-2551-T1-41	**159 001 434**	PVDF and Titanium
	3-2551-V1-41	**159 001 264**	PVDF and Hastelloy-C
DN250 to DN900 (10 to 36 in.)			
No Display			
	3-2551-P2-11	**159 001 107**	Polypropylene and 316L SS
	3-2551-T2-11	**159 001 448**	PVDF and Titanium
	3-2551-V2-11	**159 001 450**	PVDF and Hastelloy-C
with Display, two SPDT relays, one solid state relay			
	3-2551-P2-21	**159 001 435**	Polypropylene and 316L SS
	3-2551-T2-21	**159 001 454**	PVDF and Titanium
	3-2551-V2-21	**159 001 456**	PVDF and Hastelloy-C
with Display			
	3-2551-P2-41	**159 001 432**	Polypropylene and 316L SS
	3-2551-T2-41	**159 001 460**	PVDF and Titanium
	3-2551-V2-41	**159 001 462**	PVDF and Hastelloy-C

**This option is a programmable open collector output that is available with display versions only.

Ordering Information (continued)

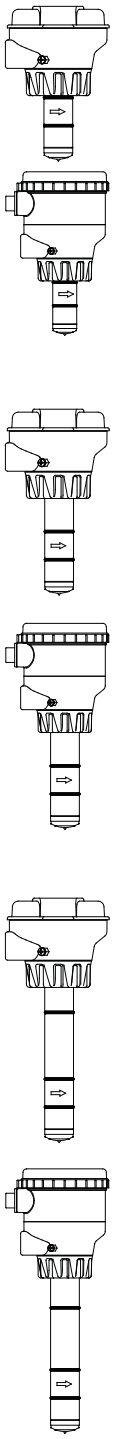

Pipe Size	Mfr. Part No.	Code	Sensor Body
4 to 20 mA output for use with PLC, PC or similar equipment			
DN15 to DN100 (½ to 4 in.)			
No Display			
	3-2551-P0-12	**159 001 110**	Polypropylene and 316L SS
	3-2551-T0-12	**159 001 113**	PVDF and Titanium
	3-2551-V0-12	**159 001 259**	PVDF and Hastelloy-C
with Display, two SPDT relays, one solid state relay			
	3-2551-P0-22	**159 001 273**	Polypropylene and 316L SS
	3-2551-T0-22	**159 001 439**	PVDF and Titanium
	3-2551-V0-22	**159 001 275**	PVDF and Hastelloy-C
with Display			
	3-2551-P0-42	**159 001 279**	Polypropylene and 316L SS
	3-2551-T0-42	**159 001 442**	PVDF and Titanium
	3-2551-V0-42	**159 001 281**	PVDF and Hastelloy-C
DN125 to DN200 (5 to 8 in.)			
No Display			
	3-2551-P1-12	**159 001 111**	Polypropylene and 316L SS
	3-2551-T1-12	**159 001 114**	PVDF and Titanium
	3-2551-V1-12	**159 001 260**	PVDF and Hastelloy-C
with Display, two SPDT relays, one solid state relay			
	3-2551-P1-22	**159 001 274**	Polypropylene and 316L SS
	3-2551-T1-22	**159 001 440**	PVDF and Titanium
	3-2551-V1-22	**159 001 276**	PVDF and Hastelloy-C
with Display			
	3-2551-P1-42	**159 001 280**	Polypropylene and 316L SS
	3-2551-T1-42	**159 001 443**	PVDF and Titanium
	3-2551-V1-42	**159 001 282**	PVDF and Hastelloy-C
DN250 to DN900 (10 to 36 in.)			
No Display			
	3-2551-P2-12	**159 001 112**	Polypropylene and 316L SS
	3-2551-T2-12	**159 001 449**	PVDF and Titanium
	3-2551-V2-12	**159 001 451**	PVDF and Hastelloy-C
with Display, two SPDT relays, one solid state relay			
	3-2551-P2-22	**159 001 438**	Polypropylene and 316L SS
	3-2551-T2-22	**159 001 455**	PVDF and Titanium
	3-2551-V2-22	**159 001 457**	PVDF and Hastelloy-C
with Display			
	3-2551-P2-42	**159 001 441**	Polypropylene and 316L SS
	3-2551-T2-42	**159 001 461**	PVDF and Titanium
	3-2551-V2-42	**159 001 463**	PVDF and Hastelloy-C

Accessories and Replacement Parts

Mfr. Part No.	Code	Description
O-Rings		
1220-0021	**198 801 000**	O-ring, FPM (2 required per sensor)
1224-0021	**198 820 006**	O-ring, EPR (EPDM) (2 required per sensor)
1228-0021	**198 820 007**	O-ring, FFPM (2 required per sensor)
Replacement Transducers		
3-2551-P0	**159 001 211**	PP/316L SS, DN15 to DN100 (½ to 4 in.) pipe
3-2551-P1	**159 001 212**	PP/316L SS, DN125 to DN200 (5 to 8 in.) pipe
3-2551-P2	**159 001 444**	PP/316L SS, DN250 to DN900 (10 to 36 in.) pipe
3-2551-T0	**159 001 213**	PVDF/Titanium, DN15 to DN100 (½ to 4 in.) pipe
3-2551-T1	**159 001 214**	PVDF/Titanium, DN125 to DN200 (5 to 8 in.) pipe
3-2551-T2	**159 001 445**	PVDF/Titanium, DN250 to DN900 (10 to 36 in.) pipe
3-2551-V0	**159 001 376**	PVDF/Hastelloy-C, DN15 to DN100 (½ to 4 in.) pipe
3-2551-V1	**159 001 377**	PVDF/Hastelloy-C, DN125 to DN200 (5 to 8 in.) pipe
3-2551-V2	**159 001 446**	PVDF/Hastelloy-C, DN250 to DN900 (10 to 36 in.) pipe
Replacement Electronics Module		
3-2551-11	**159 001 215**	Magmeter electronics, frequency or digital (S^3L) output
3-2551-12	**159 001 216**	Magmeter electronics, 4 to 20 mA output
3-2551-21	**159 001 372**	Magmeter display electronics, frequency or digital (S^3L) output, with relays
3-2551-22	**159 001 373**	Magmeter display electronics, 4 to 20 mA output w/relays
3-2551-41	**159 001 374**	Magmeter display electronics, frequency or digital (S^3L) output
3-2551-42	**159 001 375**	Magmeter display electronics, 4 to 20 mA output
Other		
P31536	**198 840 201**	Sensor plug, Polypropylene
7310-1024	**159 873 004**	24 VDC Power Supply, 0.42 A, 10W
7310-2024	**159 873 005**	24 VDC Power Supply, 1.0 A , 24W
7310-4024	**159 873 006**	24 VDC Power Supply, 1.7 A, 40W
7310-6024	**159 873 007**	24 VDC Power Supply, 2.5 A, 60W
7310-7024	**159 873 008**	24 VDC Power Supply, 4.0 A, 96W
3-8050.390-1	**159 001 702**	Retaining Nut Replacement Kit, NPT, Valox
3-8050.390-3	**159 310 116**	Retaining Nut Replacement Kit, NPT, PP
3-8050.390-4	**159 310 117**	Retaining Nut Replacement Kit, NPT, PVDF
3-8551.521	**159 001 378**	Clear plastic cap for display
1222-0042	**159 001 379**	O-ring for clear plastic cap, EPR (EPDM)
3-0250	**159 001 538**	USB to digital (S^3L) Configuration/Diagnostic tool

3-2551.099 Rev F (04/13)
© Georg Fischer Signet LLC
3401 Aero Jet Avenue, El Monte, CA 91731-2882 U.S.A. • Tel. (626) 571-2770 • Fax (626) 573-2057 • www.gfsignet.com • e-mail: signet.ps@georgfischer.com
Specifications subject to change without notice. All rights reserved. All corporate names and trademarks stated herein are the property of their respective companies.

MODEL #: CUE 3x380-500V IP55 7.5kW

Grundfos CUE

Frequency converters for pump control
60 Hz

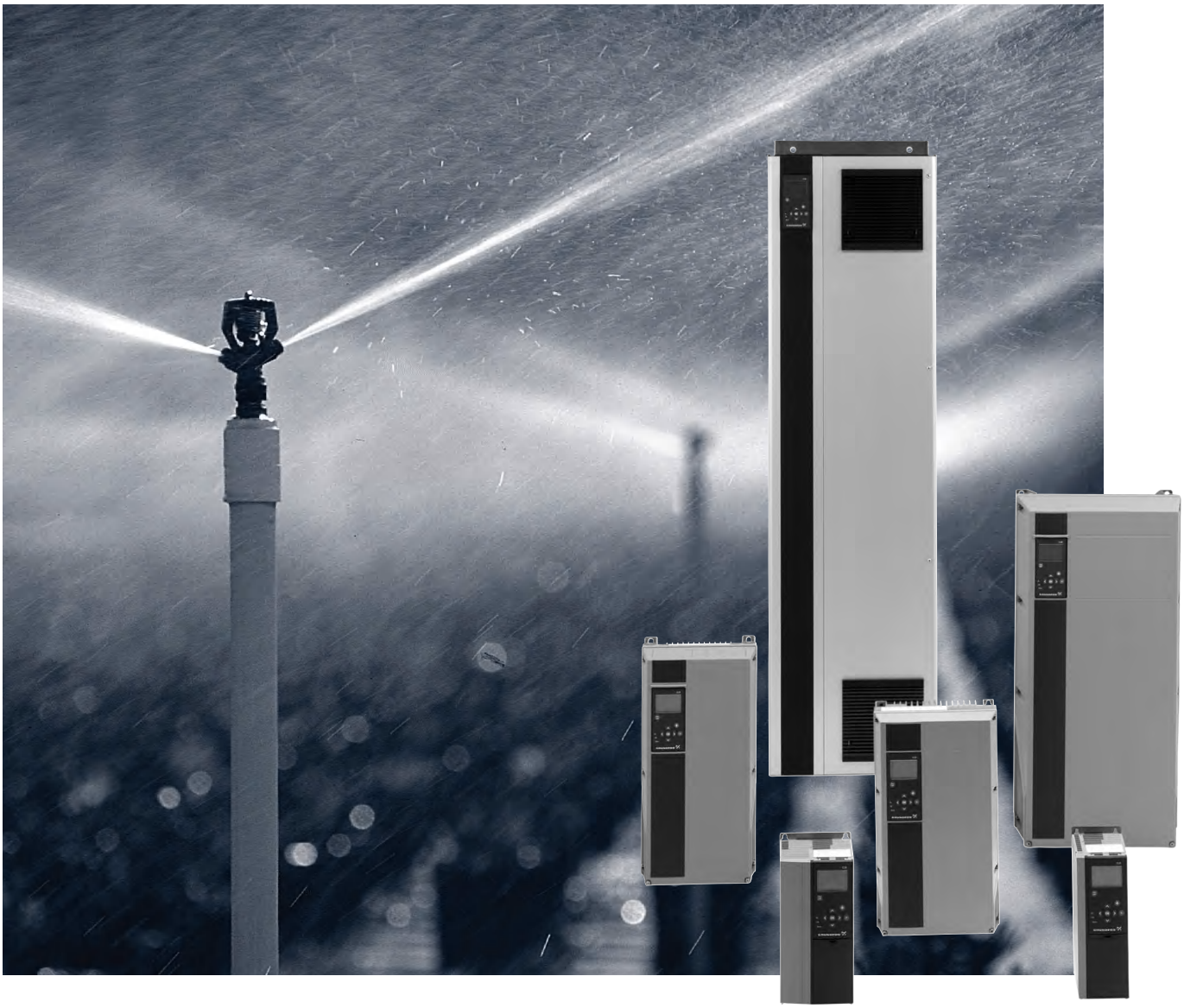

Contents

Introduction
Grundfos CUE 4

Features and benefits
User interface 6
Functions 6
Inputs and outputs 6
Accessories 7

Applications
Overview applications 8

Identification
Nameplate 9

Product range
Overview 10

Functions
Overview 11
Operating modes 13
Control modes 14
Setpoints 17
Setting the direction of rotation 20
Status functions 20
Logging functions 20
PID controller 21
Stop functions 22
Dry-running protection 23
Duty/standby 23
Operating range 24
Motor bearing monitoring 24
Standstill heating 24
Ramps 25
Proportional differential pressure, parabolic 25
Hmax update 26
Differential pressure from two sensors 26
Start delay after power-up 26
Auto/manual restart after alarm 26
Limit exceeded 27
Digital inputs 27
Signal relays 28
Analog inputs 28
Analog output 28
MCB 114 sensor input module 29
GENIbus 29
Copy of setting 30
Pipe fill (PC Tool) 30

Installation
Mechanical installation 31
Electrical installation 32
RFI filters 34
Output filters 34
EMC-correct installation 35

Operation
Control panel 37
Start-up guide 37
Warning and alarm list 38

CUE selection
How to select a CUE 39
Special conditions 40
Selection tables 41

Technical data
Main dimensions and weight 42
Surroundings 47
Sound pressure level 47
Terminal tightening torques 47
Cables 47
Fuses 48
Inputs and outputs 51

Accessories
Product numbers 52
MCB 114 sensor input module 53
Grundfos Local Control Panel, GLCP 54
Remote-mounting option for GLCP 54
Floor-mounting option 55
IP21/NEMA1 kit 55
Output filters 56
Grundfos differential pressure sensor, DPI 59

Further product documentation
WebCAPS 59
WinCAPS 60

Mission

— to successfully develop, produce and sell high-quality pumps and pumping systems worldwide, contributing to a better quality of life and a healthy environment

Bjerringbro, Denmark

Fresno, California

Olathe, Kansas

Monterrey, Mexico

Allentown, Pennsylvania

Oakville, Ontario

- One of the 3 largest pump companies in the world
- The second largest manufacturer of submersible motors in the world
- World headquarters in Denmark
- North American headquarters in Kansas City - Manufacturing in Fresno, California
- 72 companies in 41 countries
- More than 10 million motors and pumps produced annually worldwide
- North American companies operating in USA, Canada and Mexico
- Continuous reinvestment in growth and development enables the company to

  BE responsible, **THINK** ahead, and **INNOVATE**

Grundfos CUE

The CUE is a series of frequency converters designed for speed control of a wide range of Grundfos pumps.

Fig. 1 Grundfos CUE solution

Built-in E-pump functionality

The CUE solution contains the same control functionality as the Grundfos E-pumps and is thus a supplement to the E-pump range. See the table below.

All CUE Solutions are available in two enclosure classes: IP21 (NEMA 1) or IP55 (Nema 12).

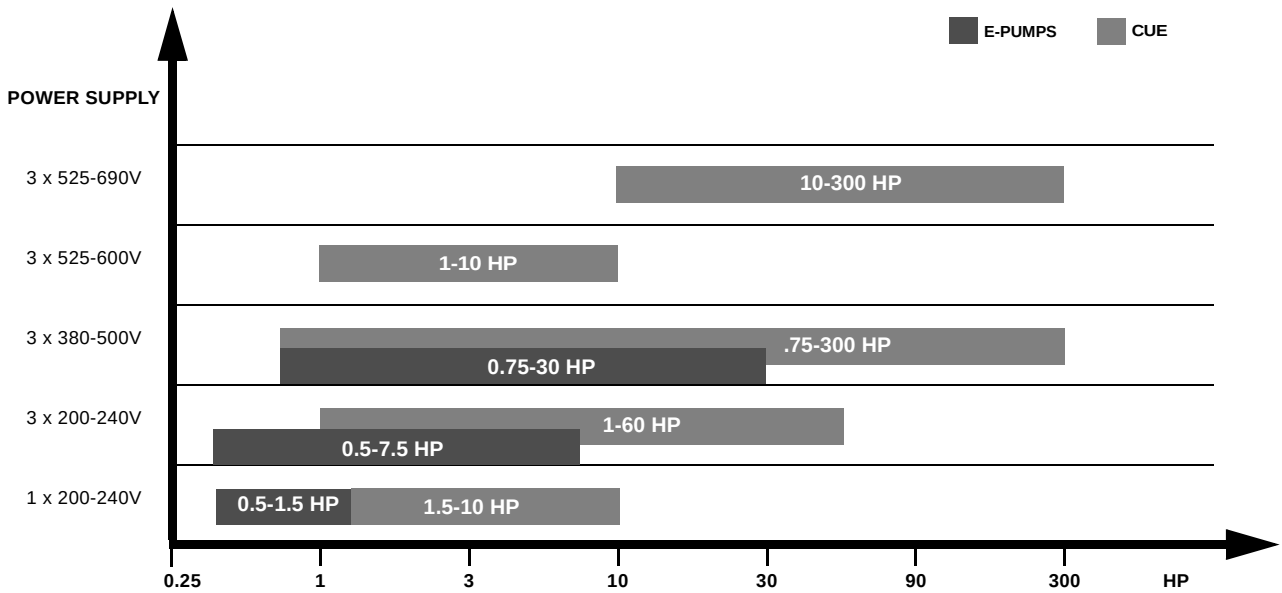

*** Power supply only up to 480 V**

****Power supply only 208 to 230 V**

Introduction

Designed for Grundfos pumps

The CUE can be used in both new and existing installations, but the pump and motor should be suitable for use with frequency converters.

The table below shows which Grundfos pump types the CUE is designed for.

Pump type
AFG
AMD
AMG
BM, BMB, BMP
BME, BMET, BMEX
CH, CHI, CHN, CHV
CHIU
Contra
CPH, CPV
CR, CRI, CRN, CRT
CRK
CV
DP, EF
durietta
Euro HYGIA
F&B HYGIA
HS
LC, LF
MAXA, MAXANA
MTA, MTH, MTR
MTB
NB, NK
NBG, NKG
S
SE, SEN, SEV
SP,SP-G, SP-NE
SPK
SRP
TP
VL

Further technical documentation

- Installation and operating instructions contain all information for putting the CUE into operation.
- Installation and operating instructions of the MCB 114 sensor input module contain all information for installation of the MCB 114.

Technical documentation is available on www.grundfos.com > International website > WebCAPS.
If you have any questions, please contact the nearest Grundfos company or service workshop.

Features and benefits

User interface

The user interface offers these possibilities:

- Local operation via a control panel with graphic display where the menu structure is based on the well-known system from Grundfos E-pumps.
- Remote operation via external signals, for instance via digital inputs or GENIbus.
- Monitoring of operating status via indicator lights and signal relays.
- Display of alarm or warning and logging of the last five alarms and warnings.

Functions

Control modes for centrifugal pumps

The CUE has a wide range of pump-specific functions:

- Open loop:
  The speed is kept at a set value in the range of min. and max. speed.
- Proportional differential pressure:
  The differential pressure is reduced at a falling flow rate and increased at a rising flow rate.
- Constant differential pressure:
  The differential pressure is kept constant, independently of the flow rate.
- Constant pressure:
  The pressure is kept constant, independently of the flow rate.
- Constant level:
  The liquid level is kept constant, independently of the flow rate.
- Constant flow rate:
  The flow rate is kept constant, independently of the head.
- Constant temperature:
  The liquid temperature is kept constant, independently of the flow rate.
- Constant other value:
  Any other value is kept constant.

Start-up guide

The CUE has a start-up guide, which begins at the first start-up. Here a number of parameters are set automatically on basis of the pump type. Other parameters are set manually on basis of the data on the motor and pump nameplates.

Thanks to the start-up guide, the installer can quickly set central parameters and put the CUE into operation.

Direction of rotation test

During the start-up guide, the CUE automatically tests and sets the correct direction of rotation without changing the cable connections. This feature is activated only if a pressure or flow sensor is installed.

Duty/standby

The duty/standby function is used to alternate between two pumps. Each pump is connected to a CUE unit. The primary task is to start the standby pump if the duty pump is stopped due to an alarm and to alternate the two pumps at least every 24 hours.

Duty/standby operation increases the security of supply and ensures even use between the two pumps.

Dry-running protection

To protect the pump, select the dry-running function together with an external sensor so that lack of inlet pressure or water shortage can be detected.

Low-flow stop function

In control mode constant pressure or constant level, the stop function is used for changing between on/off operation at low or no flow and continuous operation at high flow rate.

The low-flow stop function protects the pump and saves energy.

Monitoring of lubrication of motor bearings

When the bearing monitoring function is active, a warning will appear in the display when the motor bearings are to be relubricated or replaced. Furthermore, the function gives an estimated time to service.

This aids in motor maintenance programs.

Inputs and outputs

The CUE is equipped with a number of inputs and outputs:

- 1 analog input, 0-10 V, 4-20 mA
  - external setpoint
- 1 analog input, 4-20 mA
  - sensor input, feedback sensor
- 1 analog output, 0-20 mA
- 4 digital inputs
  - start/stop and 3 programmable inputs
- 2 signal relays (C/NO/NC)
  - programmable
- 1 RS-485 GENIbus connection.

Accessories

Grundfos offers a number of accessories for the CUE.

MCB 114 sensor input module

The MCB 114 is an option offering additional analog inputs for the CUE:

- 1 analog input, 4-20 mA
- 2 inputs for Pt100/Pt1000 temperature sensors.

Output filters

Output filters are used primarily for protecting the motor against overvoltage and increased operating temperature. However, output filters can also be used for reduction of acoustic motor noise.

Grundfos provides two types of output filter as accessories for the CUE:

- dU/dt filters
- sine-wave filters.

Floor mounting option

The CUE is default installed on the wall. The enclosures D1 and D2 can also be installed on the floor on a pedestal designed for that purpose.

For information about enclosures, see page 45.

Remote mounting kit

Allows control pad to be mounted remotely; 9.8 ft (3m) cable.

Applications

Overview applications

The CUE is a multi-purpose frequency converter suitable for a variety of applications demanding reliable and cost-efficient pump operation.

The CUE is used in five main fields of application:

Water supply and pressure boosting

Besides general water supply in municipal and industrial waterworks, the CUE is used for these specific applications:

- water supply
- pressure boosting
- washing.

The typical control modes are constant pressure, constant flow rate. Stop functions are used to stop the pump when low or no flow is detected.

Heating and air-conditioning

Liquid transfer in:

- heating applications
- cooling and air-conditioning applications.

The typical control modes are proportional pressure or constant temperature.

Process and sanitary applications

Liquid transfer in:

- breweries and dairies
- pure-water applications
- process applications
- purification applications.

The CUE is typically controlled by an external controller. The typical control mode is Open loop.

Groundwater

Typical applications:

- groundwater supply to waterworks
- irrigation in horticulture and agriculture
- dewatering.

The typical control modes are constant pressure, constant flow rate or constant level control.

Wastewater

Transfer of:

- wastewater
- effluent
- drainage water
- process water.

The typical control mode is constant level function (emptying function).

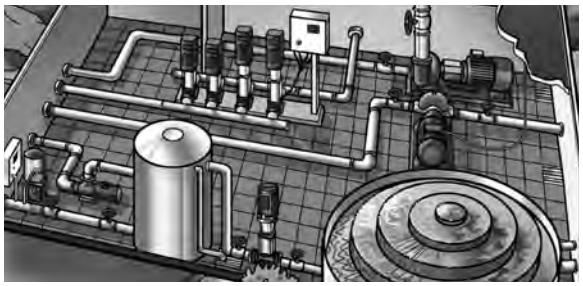

TM03 0146 4204

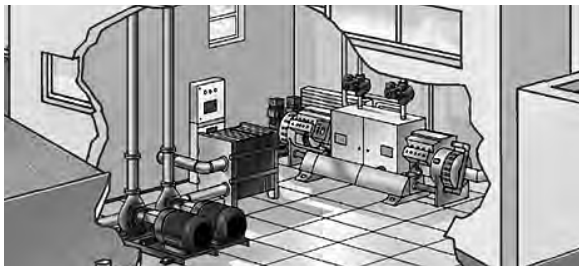

TM03 0147 4204

TM03 0148 4204

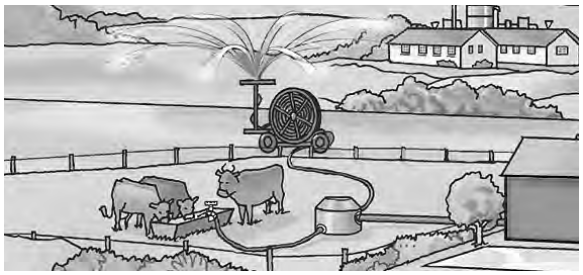

TM03 0149 4204

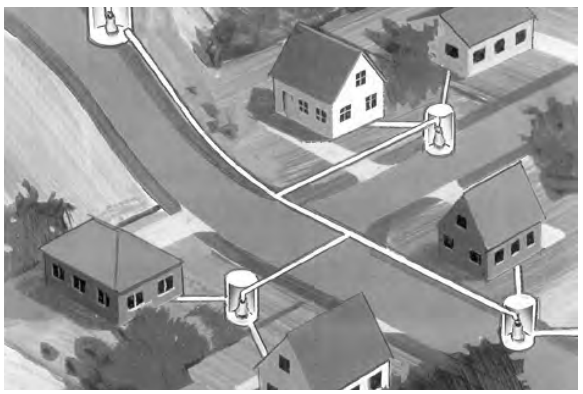

TM04 0223 5107

Identification

Nameplate

The CUE can be identified by means of the nameplate. An example is shown below.

Fig. 2 Example of nameplate

Text	Description
T/C:	CUE (product name) 202P132... (internal code)
Prod.no:	Product number: 96754515*
S/N:	Serial number: 123456G123 The last three digits indicate the production date: 12 is the week, and 3 is the year 2003.
0.75 kW	Typical shaft power on the motor
IN:	Supply voltage, frequency and maximum input current
OUT:	Motor voltage, frequency and maximum output current. The maximum output frequency usually depends on the pump type.
CHASSIS/ IP20	Enclosure class
Tamb.	Maximum ambient temperature

* Product number is for drive only. Refer to price lists for packaged drive part numbers.

Product range

Overview

The CUE cabinet sizes are characterised by their enclosures. The table shows the relation between power size (P2), mains supply (V) and enclosure class (IP). It shows the complete range of the CUE.

Typical shaft power P2		Mains supply and enclosure class													
		1 x 200-240 V			3 x 200-240 V		3 x 380-500 V				3 x 525-600 V		3 x 525-690 V		
[kW]	[HP]*	IP20	IP21	IP55	IP20	IP55	IP20	IP21	IP54	IP55	IP20	IP55	IP21	IP54	IP55
0.55	0.75						●			●					
0.75	1				●	●	●			●	●	●			
1.1	1.5	●		●	●	●	●			●	●	●			
1.5	2		●	●	●	●	●			●	●	●			
2.2	3		●	●	●	●	●			●	●	●			
3	4		●	●	●	●	●			●	●	●			
3.7	5		●	●	●	●									
4	5						●			●	●	●			
5.5	7.5		●	●	●	●	●			●	●	●			
7.5	10		●	●	●	●	●			●	●	●			
11	15				●	●	●			●			●		●
15	20				●	●	●			●			●		●
18.5	25				●	●	●			●			●		●
22	30				●	●	●			●			●		●
30	40				●	●	●			●			●		●
37	50				●	●	●			●			●		●
45	60				●	●	●			●			●		●
55	75						●			●			●		●
75	100						●			●			●		●
90	125						●			●			●		●
110	150							●	●				●	●	
132	200							●	●				●	●	
160	250							●	●				●	●	
200	300							●	●				●	●	
250	350							●	●				●	●	

* CUE Hp ratings do not always match motor Hp ratings. Always size CUE by max amperage output and motor amperage.

Functions

Overview

The table below shows the functions settings offered by the CUE.

CUE functions	Setting or reading via:		
	CUE	GENIbus	PC Tool*
Operating modes, see page 13			
Normal	●	❍	☐
Stop	●	❍	☐
Min.	●	❍	☐
Max.	●	❍	☐
Control modes, see page 14			
Open loop	●	❍	☐
Proportional differential pressure	●	❍	☐
Constant differential pressure	●	❍	☐
Constant pressure	●	❍	☐
Constant pressure with stop function	●	❍	☐
Constant level	●	❍	☐
Constant level with stop function	●	❍	☐
Constant flow rate	●	❍	☐
Constant temperature	●	❍	☐
Constant other value	●	❍	☐
Setpoints, see page 17			
Setpoint, CUE menu	●		
External setpoint	●	❍	☐
GENIbus setpoint		❍	
Predefined setpoints from digital inputs			☐
Additional functions, see page 20			
Setting the direction of rotation	●		☐
Status information	●		☐
Logging information	●		☐
PID controller	●	❍	☐
Stop functions	●		☐
Dry-running protection	●		☐
Duty/standby	●		☐
Operating range	●	❍	☐
Motor bearing monitoring	●	❍	☐
Standstill heating	●	❍	☐
Ramps	●		☐
Proportional differential pressure, parabolic			☐
Hmax update			☐
Differential pressure from two sensors			☐
Start delay after power-up			☐
Auto/manual restart after alarm		❍	☐
Limit exceeded		❍	☐
Copy settings	●		
Pipe fill		❍	☐

Functions

CUE functions	Setting or reading via:		
	CUE	GENIbus	PC Tool*
Digital inputs, see page 27			
Start/stop	●		☐
Min. (Min. curve)	●		☐
Max. (Max. curve)	●		☐
External fault	●		☐
Flow switch	●		☐
Alarm reset	●		☐
Dry running (from external sensor)	●		☐
Accumulated flow (from pulse flow sensor)	●		☐
Additional set of ramps, ramp selector			☐
Predefined setpoints from digital input			☐
Signal relays, see page 28			
Ready	●		☐
Warning	●		☐
Alarm	●		☐
Operation	●		☐
Pump running	●		☐
Relubricate	●		☐
External relay control			☐
Limit exceeded			☐
Analog inputs, see page 28			
External setpoint	●		☐
Sensor 1	●		☐
Analog output, see page 28			
Feedback value			☐
Speed			☐
Frequency			☐
Motor current			☐
External setpoint input			☐
Limit exceeded			☐
MCB 114 sensor input module, see page 29			
Sensor input 2	●		☐
Temperature sensor 1	●		☐
Temperature sensor 2	●		☐

● Default

❍ Optional with GENIbus

☐ Optional with PC-tool

* The PC Tool is a software program supplied on a CD and hardware connecting your computer with the CUE.

Operating modes

These operating modes can be selected with the CUE:

- Normal
- Stop
- Min.
- Max.

The operating modes can be set without changing the setpoint setting.

Normal

The pump operates in the control mode selected. See page 14.

The control modes are different ways of controlling the pump speed when the operating mode is set to Normal.

Stop

The pump has been stopped by user.

Min. curve

The pump is running at a set value for minimum speed. See fig. 3.

This operating mode can for instance be used in periods with a very small flow requirement.

Max. curve

The pump is running at a set value for maximum speed. See fig. 3.

This operating mode can for instance be used for venting the pump during installation.

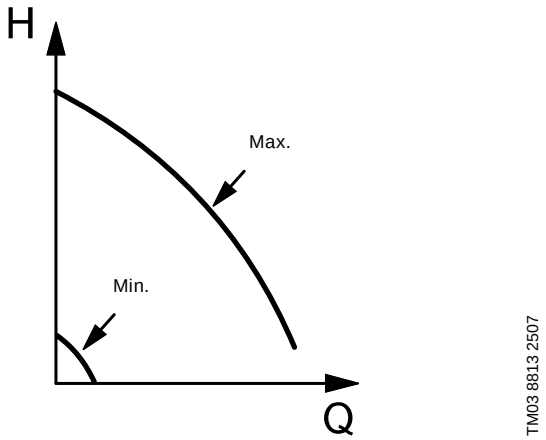

Fig. 3 Min. and max. curves

Functions

Control modes

The CUE has a built-in PID controller that provides closed-loop control of the value you want to control. The CUE can also be set to open-loop control where the setpoint represents the desired pump speed.

Open loop is typically used without sensor. All other control modes require a sensor.

The table below shows the functions and possible settings offered by the CUE.

Overview

Pump type	Open loop	Proportional differential pressure	Constant differential pressure	Constant pressure	Constant level	Constant flow rate	Constant temperature	Constant other value
AFG	●				●	●		●
AMD	●				●	●		●
AMG	●				●	●		●
BM, BMB	●			●	●	●		●
BME, BMET, BMEX	●			●	●	●		●
BMP	●	●	●	●		●		●
CH, CHI, CHN, CHV	●			●	●	●	●	●
CHIU	●			●	●	●	●	●
Contra	●			●	●	●	●	●
CPH, CPV	●			●	●	●	●	●
CR, CRI, CRN, CRT	●			●	●	●	●	●
CRK	●			●	●	●	●	●
CV	●			●	●	●	●	●
DP, EF	●			●	●	●		●
durietta	●			●	●	●	●	●
Euro HYGIA	●			●	●	●	●	●
F&B HYGIA	●			●	●	●	●	●
HS	●		●	●		●	●	●
LC, LF	●		●	●		●	●	●
MAXA, MAXANA	●		●	●	●	●	●	●
MTA, MTH, MTR	●			●	●	●	●	●
MTB	●			●	●	●	●	●
NB, NK	●		●	●	●	●	●	●
NBG, NKG	●		●	●	●	●	●	●
S	●			●	●	●		●
SE, SEN, SEV	●			●	●	●		●
SP,SP-G, SP-NE	●			●	●	●	●	●
SPK	●			●	●	●	●	●
SRP	●				●	●		●
TP	●	●	●	●	●	●	●	●
VL	●			●		●	●	●
Other	●	●	●	●	●	●	●	●

See fur her description on the next pages.

Open loop, constant curve

The speed is kept at a set value in the range between the min. and max. curves. See fig. 4.

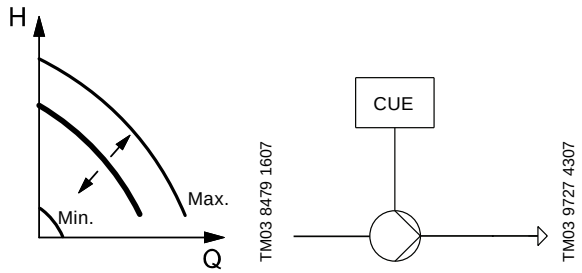

Fig. 4 Open loop, constant curve

In control mode Open loop, the setpoint is set in% of the nominal speed. The setting range will lie between the min. and max. curves.

Operation on constant curve can for instance be used for pumps with no sensor connected.

This control mode is also typically used in connection with an overall control system such as Control MPC or another external controller.

Proportional differential pressure

The differential pressure of the pump is reduced at falling flow rate and increased at rising flow rate. See fig. 5.

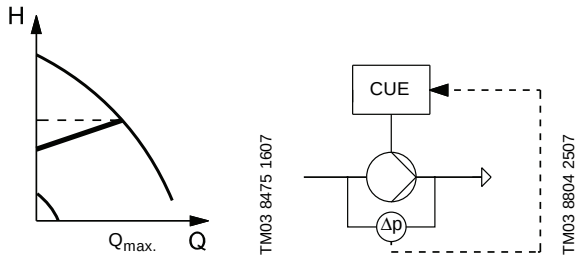

Fig. 5 Proportional differential pressure

The pump is controlled according to a differential pressure measured across the pump. This means that the pump system offers a proportional differential pressure in the Q-range of 0 to $Q_{max.}$, represented by the sloping line in the QH diagram.

Constant differential pressure, pump

The differential pressure of the pump is kept constant, independently of the flow rate. See fig. 6.

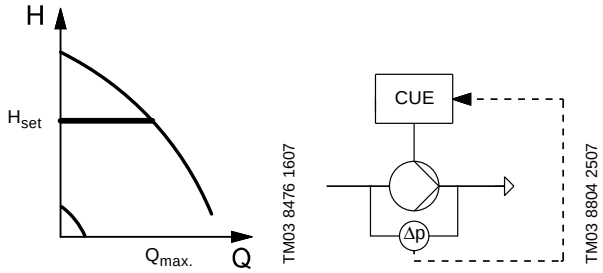

Fig. 6 Constant differential pressure, pump

The pump is controlled according to a constant differential pressure measured across the pump. This means that the pump system offers constant differential pressure in the Q-range of 0 to $Q_{max.}$, represented by the horizontal line in the QH diagram.

Constant differential pressure, system

The differential pressure of the system is kept constant, independently of the flow rate. See fig. 7.

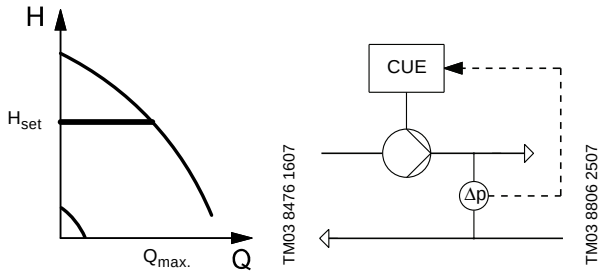

Fig. 7 Constant differential pressure, system

The pump is controlled according to a constant differential pressure measured across the system. This means that the pump offers constant differential pressure of the system in the Q-range of 0 to $Q_{max.}$, represented by the horizontal line in the QH diagram.

Constant pressure with stop function

The outlet pressure is kept constant at high flow rate. On/off operation at low flow rate. See fig. 8.

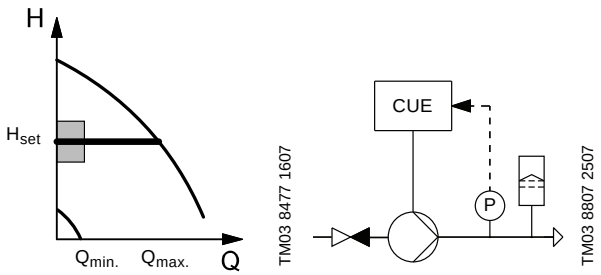

Fig. 8 Constant pressure with stop function

The pump is controlled according to a constant pressure measured after the pump. This means that the pump offers a constant pressure in the Q-range of Q_{min} to $Q_{max.}$, represented by the horizontal line in the QH diagram.

Constant level

The liquid level is kept constant, independently of the flow rate. See fig. 9.

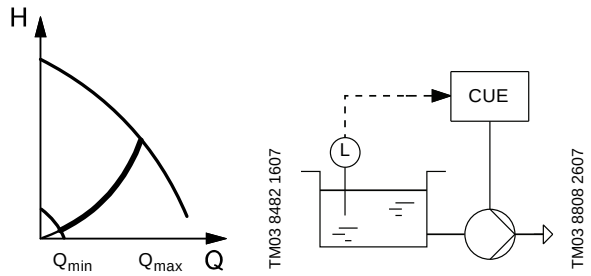

Fig. 9 Constant level

The pump is controlled according to a constant liquid level. This means that the pump offers a constant level in the Q-range of $Q_{min.}$ to $Q_{max.}$, represented by the parable line in the QH diagram.

The function is default an emptying function.

Constant level with stop function

The liquid level is kept constant at high flow rate. On/off operation at low flow rate. See fig. 10.

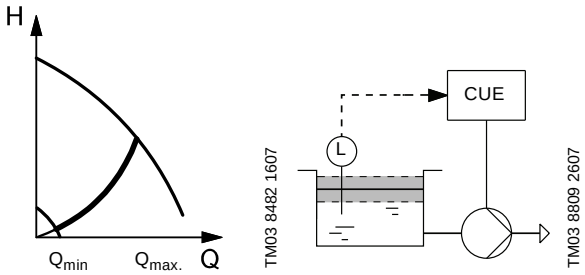

Fig. 10 Constant level with stop function

The pump is controlled according to a constant liquid level. This means that the pump offers a constant level in the Q-range of $Q_{min.}$ to $Q_{max.}$, represented by the parable line in the QH diagram.

The function is default an emptying function.

Constant flow rate

The flow rate is kept constant, independently of the head. See fig. 11.

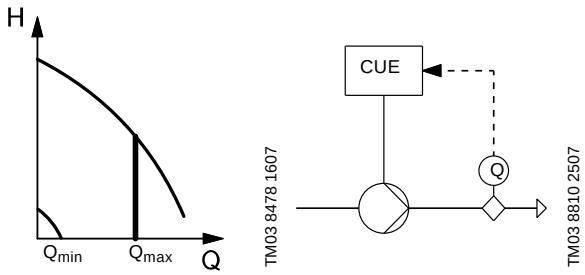

Fig. 11 Constant flow rate

The pump is controlled according to a constant flow rate, represented by the vertical line in the QH diagram.

Constant temperature

The liquid temperature is kept constant, independently of the flow rate. See fig. 12.

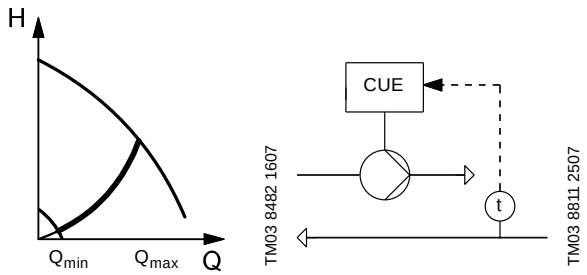

Fig. 12 Constant temperature

The pump is controlled according to a constant temperature. This means that the pump offers a variable flow rate in the Q-range of $Q_{min.}$ to $Q_{max.}$, represented by the parable line in the QH diagram.

Constant other value

Any other value is kept constant. See the CUE installation and operation instructions for further information.

Setpoints

The setpoint is normally set in the menu Operation via the CUE control panel. If needed, the setpoint can be influenced via the external setpoint input.

The CUE offers these setpoint possibilities:

- Setpoint, CUE menu (default)
- External setpoint (default)
- Predefined setpoints (setting via PC Tool)
- GENIbus setpoint (setting via GENIbus).

Setpoint, CUE menu

The setpoint can be set by the user via the CUE control panel when the CUE is in local operating mode and no digital inputs are used for predefined setpoints.

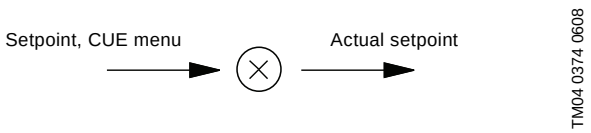

Fig. 13 Setpoint, CUE menu

The setpoint range depends on the selected control mode.

In control mode Open loop, the setpoint is set in% corresponding to the required speed. The setting range is between the min. and max. curves.

In control mode Proportional differential pressure, the setting range is equal to 25% to 90% of max. head.

In all other control modes, the setting range is equal to the sensor measuring range.

External setpoint

The setpoint set via the CUE menu can be influenced by connecting an analog signal to the external setpoint input.

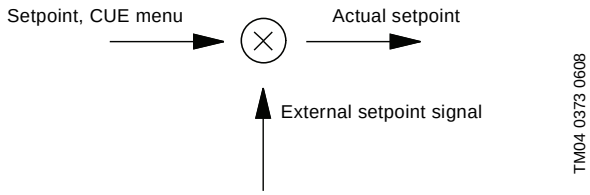

Fig. 14 Setpoint, CUE menu and external setpoint signal

This function offers these possibilities:

- External setpoint (default)
- Inverse external setpoint (setting via control panel)
- External setpoint with stop (setting via PC Tool)
- External setpoint based on a reference table (setting via PC Tool).

The external setpoint signal is used for calculating the actual setpoint. The minimum signal is the minimum setpoint, and the maximum signal is the setpoint set via the CUE menu. See fig. 15.

External setpoint influence (default)

The actual setpoint is a linear function of the external setpoint signal. See fig. 15.

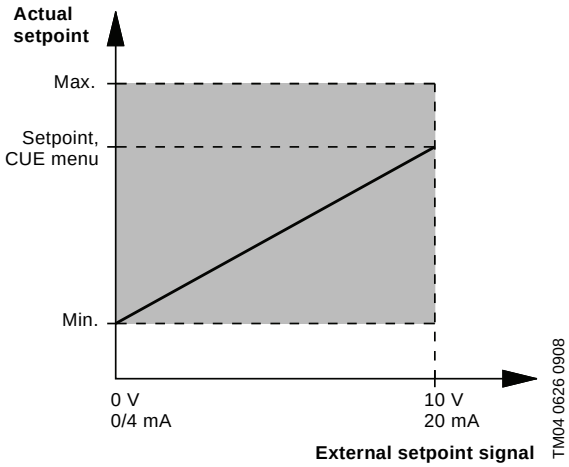

Fig. 15 External setpoint

The minimum and maximum values of the external setpoint signal can be set via the PC Tool. See fig. 16.

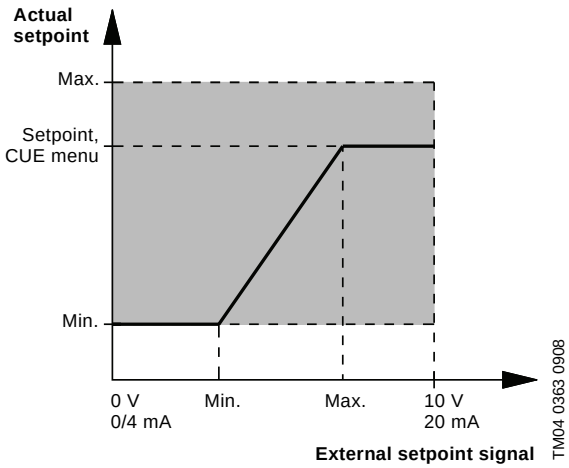

Fig. 16 Reduced external setpoint signal

Inverse external setpoint

The actual setpoint is an inverse linear function of the external setpoint signal. See fig. 17.

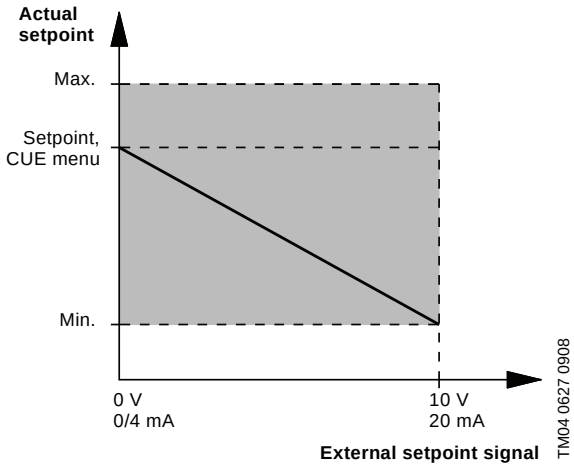

Fig. 17 Inverse external setpoint signal

The minimum and maximum values of the external setpoint signal can be set via the control panel. See fig. 18.

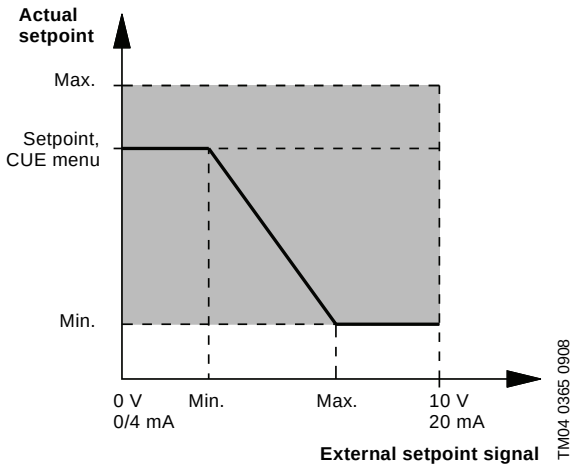

Fig. 18 Reduced inverse external setpoint signal

External setpoint with stop function

Setting via PC Tool.

The actual setpoint with stop is a linear function of the external setpoint signal above 20% signal and on/off operation below 20% signal. See fig. 19.

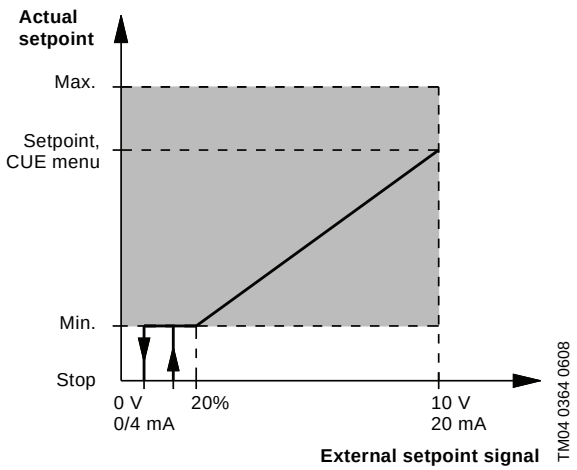

Fig. 19 External setpoint with stop function

When the external setpoint signal is below 10%, the operating mode is Stop.

When the external setpoint signal is above 15%, the operating mode is Normal.

External setpoint based on a reference table

Setting via PC Tool.

The actual setpoint is a piecewise linear function of the external setpoint signal. See fig. 20.

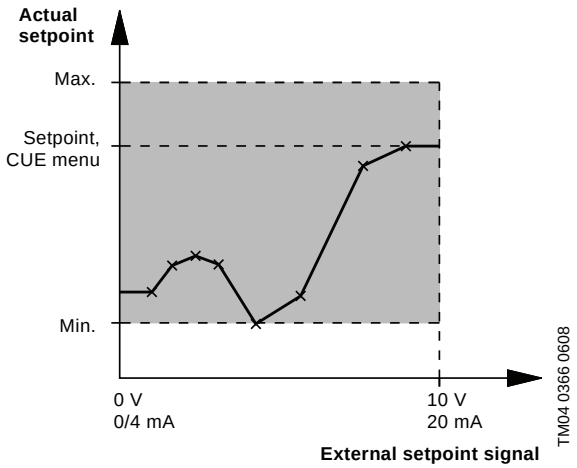

Fig. 20 External setpoint based on a reference table

The linear function is defined as an interpolation between the points in a table. The table has of up to 8 points.

Predefined setpoints

Setting via PC Tool.

This function makes it possible to select up to seven predefined setpoints using one to three digital inputs.

The setpoints are selected as a binary coding of the digital inputs as shown in the table below.

Predefined setpoint	DI 2	DI 3	DI 4
1	x		
2		x	
3	x	x	
4			x
5	x		x
6		x	x
7	x	x	x

x = Closed contact

If none of the digital inputs are activated, the operating mode can be configured to Stop or to being controlled according to a setpoint set via the control panel.

If Min., Max. or Stop is selected via the control panel, the predefined setpoints are overruled.

Note: Predefined setpoints cannot be influenced by the external setpoint input.

GENIbus setpoint

If the CUE is remote-controlled via the GENIbus input, the setpoint is set via the bus.

Note: The GENIbus setpoint cannot be influenced by the external setpoint signal.

Setting the direction of rotation

The start-up guide begins the first time the CUE is connected to supply voltage. While going through the start-up guide, the CUE tests and sets the correct direction of rotation without changing the cable connections to the motor.

The correct direction of rotation can be set in these ways:

- automatic setting
- manual setting when the direction of rotation is visible
- manual setting when the direction of rotation is not visible.

Automatic setting

The CUE automatically tests and sets the correct direction of rotation without changing the cable connections. This feature is activated only if a flow or pressure sensor is installed.

This test is not suitable for all pump types and will in certain cases not be able to determine for certainty the correct direction of rotation. In these cases, the CUE changes over to manual setting where the direction of rotation is determined on the basis of the installer's observations.

Manual setting when the direction of rotation is visible

The correct direction of rotation is set manually without changing the cable connections. This requires that it is possible to observe the motor fan or shaft.

Manual setting when the direction of rotation is not visible

The correct direction of rotation is set manually without changing the cable connections. This requires that it is possible to observe the head or flow rate.

Status functions

The CUE shows these data:

- power consumption
- operating hours
- accumulated flow
- energy per m^3 or gallon (requires flow meter).

The status information can be shown in the display.

Power consumption

The value of the power consumption is an accumulated value calculated from the pump's birth and cannot be reset. No additional sensor is required.

Operating hours

The value of operating hours is an accumulated value calculated from the pump's birth and cannot be reset. No additional sensor is required.

Accumulated flow

The value of accumulated flow is calculated by means of a flow measurement from either a digital pulse input or an analog input.

When using a digital input, the number of pulses is counted and multiplied by the litre/pulse parameter in order to get the accumulated flow.

When using an analog input, the accumulated flow value is updated every 10 seconds with the volume pumped in that period.

Energy per m^3 or gallon

The actual energy per m^3 (kWh/m^3) is calculated as actual power consumption divided by actual flow rate.

Logging functions

Alarm and warning log

The latest five alarms and five warnings are logged with a timestamp corresponding to the power on time after the fault has occurred. The alarm and warning log can be shown directly on the display.

See the warning and alarm list page 38.

Correlated histogram (setting via PC Tool)

The correlated histogram is a way to examine the joint distribution of two parameters. The logging for a correlated histogram are count of the number of samples that at the same time are within a given interval of variable 1 and variable 2.

PID controller

The CUE has a built-in PID controller for speed control of pumps. The factory setting of gain (K_p) and integral time (T_i) can easily be changed in the control panel.

The controller can operate in both normal and inverse mode.

Normal mode

Normal mode is used in systems in which an increase in pump performance will result in a **rise** in the value measured at the feedback sensor. This will typically be the case in most CUE applications.

Normal mode is selected by setting the gain (K_p) to a positive value in the control panel.

Inverse mode

Inverse mode is used in systems in which an increase in pump performance will result in a **drop** in the value measured at the feedback sensor. This mode will typically be used for constant level operation (emptying tank) and for constant temperature operation in cooling systems.

Inverse mode is selected by setting the gain (K_p) to a negative value in the control panel.

Description

The PID controller compares the required setpoint (p_{set}) with the actual value (p) measured by the transmitter (P). See fig. 21.

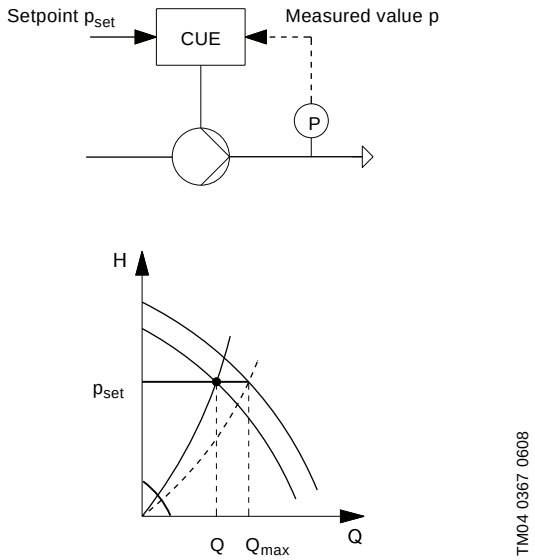

Fig. 21 Constant pressure control

If the measured value is higher than the required setpoint, the PID controller will reduce the speed and the performance of the pump until the measured value is equal to the required setpoint.

Suggested controller settings

System/application	K_p Heating system 1)	K_p Cooling system 2)	T_i
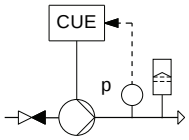	0.2		0.5
	SP, SP-G, SP-NE: 0.5		0.5
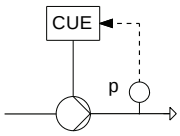	0.2		0.5
	SP, SP-G, SP-NE: 0.5		0.5
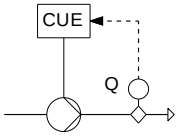	0.2		0.5
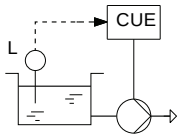	–2.5		100
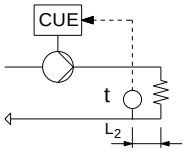	0.5	–0.5	$10 + 5L_2$
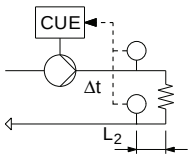	0.5		$10 + 5L_2$
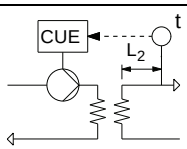	0.5	–0.5	$30 + 5L_2$*
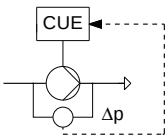	0.5		0.5*
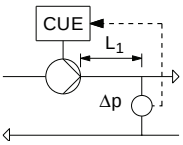	0.5		L_1 < 5 m: 0.5* L_1 > 5 m: 3* L_1 > 10 m: 5*

*Ti = 100 seconds (factory setting).
Heating systems are systems in which an increase in pump performance will result in a **rise** in temperature at the sensor.
Cooling systems are systems in which an increase in pump performance will result in a **drop** in temperature at the sensor.
L_1 =Distance in [m] between pump and sensor.
L_2 =Distance in [m] between heat exchanger and sensor.

Stop functions

Constant pressure with stop function

The purpose of the stop function is to stop the pump when low or no flow is detected.

When low flow is detected, the pump is in on/off operation. If there is flow, the pump will continue operating according to the setpoint. See fig. 22.

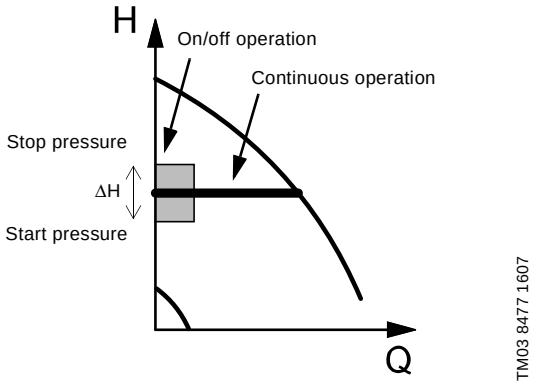

Fig. 22 Constant pressure with stop function. Difference between start and stop pressures (ΔH)

Low flow can be detected in two different ways:

- a built-in low-flow detection function
- a flow switch connected to a digital input.

Low-flow detection function

The low-flow detection function will check the flow regularly by reducing the speed for a short time. No or only a small change in pressure means that there is low flow.

Low-flow detection with flow switch

When a flow switch detects low flow, the digital input will be activated.

Operating conditions for the stop function

It is only possible to use the stop function if the system incorporates these components:

- a pressure sensor
- a non-return valve
- a diaphragm tank.

Note: The non-return valve must always be installed before the pressure sensor. See figs 23 and 24.

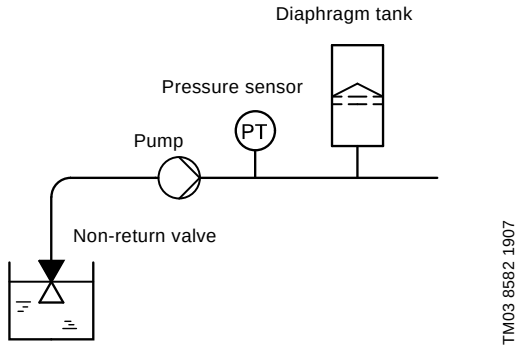

Fig. 23 Position of the non-return valve and pressure sensor in a system with suction lift operation

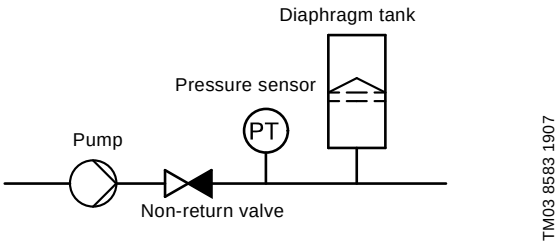

Fig. 24 Position of the non-return valve and pressure sensor in a system with positive inlet pressure

Diaphragm tank

The stop function requires a diaphragm tank of a certain minimum size. The tank must be installed as close as possible after the pump, and the precharge pressure must be 0.7 x actual setpoint.

Recommended diaphragm tank size:

Rated flow rate of pump gpm (m^3/h)	Typical diaphragm tank size gal (litres)
0-25 (0-6)	2 (8)
25-100 (7-24)	4 (18)
100-175 (25-40)	14 (50)
175-300 (41-70)	32 (120)
300-450 (71-100)	44 (180)

If a diaphragm tank of the above size is installed in the system, the factory setting of ΔH is the correct setting. If the tank installed is too small, the pump will start and stop too often.

Constant level with stop function

The purpose of the stop function is to stop the pump when low or no flow is detected.

Note: It is only possible to set constant level with stop function if the system incorporates a level sensor, and all valves can be closed.

When low flow is detected, the pump is in on/off operation. If there is flow, the pump will continue operating according to the setpoint. See fig. 25.

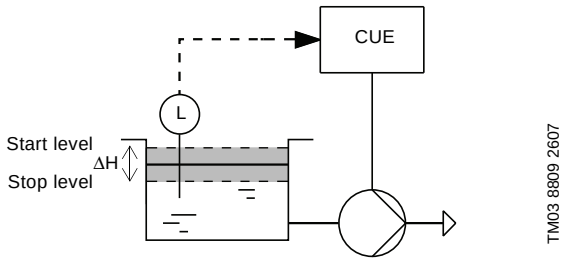

Fig. 25 Constant level with stop function. Difference between start and stop levels (ΔH)

Low flow can be detected in two different ways:

- with the built-in low-flow detection function
- with a flow switch connected to a digital input.

Low-flow detection function

The low-flow detection function will check the flow regularly by measurement of speed and power.

Low-flow detection with flow switch

When a flow switch detects low flow, the digital input will be activated.

Dry-running protection

This function protects the pump against dry running. When lack of inlet pressure or water shortage is detected, the pump will be stopped before being damaging.

Lack of inlet pressure or water shortage can be detected in two ways:

- With a switch connected to a digital input configured to dry-running protection.
- The CUE checks if the shaft power is below a dry-pump limit for a configurable time (setting via PC Tool).

The use of a digital input requires an accessory, such as:

- a Grundfos Liqtec® dry-running switch
- a pressure switch installed on the suction side of the pump
- a float switch installed on the suction side of the pump.

The pump cannot restart as long as the input is activated. Restart may be delayed by up to 30 minutes, depending of the pump family.

Duty/standby

The built-in duty/standby function applies to two pumps connected in parallel to ensure reliability of supply. See fig. 26.

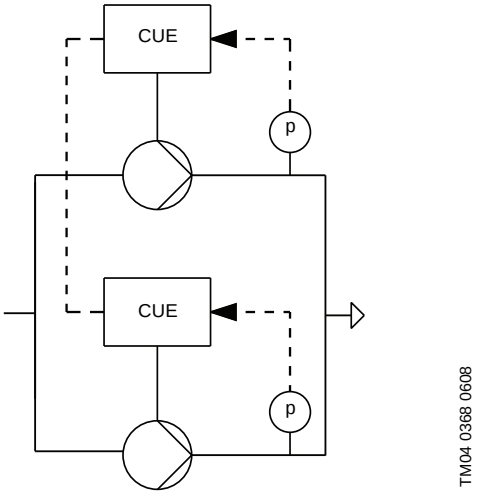

Fig. 26 Two pumps connected in parallel and controlled via GENIbus

These are the primary purposes of the function:

- To let one pump run at a time.
- To start the standby pump if the duty pump stops due to an alarm.
- To alternate the pumps at least every 24 hours.

Description

The two pumps are electrically connected by means of the GENIbus interface. Each pump must be connected to its own CUE and sensor.

Note: The two pumps running duty/standby in this way cannot use the GENIbus interface for remote communication.

The function is activated via the control panel.

Operating mode

The two pumps use their own local operating mode. For instance, pump 1 can operate in Normal mode, and pump 2 can operate in Max. mode.

Control mode

Both pumps must have the same control mode.

Operating range

The area between the min. and max. speed is the actual operating range of the pump.

The operating range can be changed by the user within the area defined by the pump-dependent speed range.

For some pump families over synchronous operation (max. speed above 100%) will be possible. This requires an over-size motor to deliver the shaft power required by the pump during over-synchronous operation.

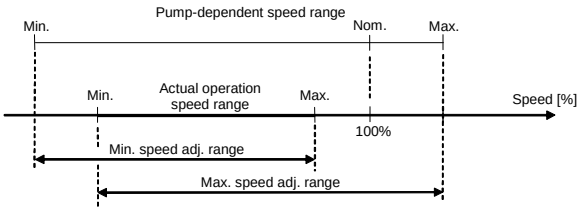

Fig. 27 Setting of the min. and max. speed in % of the nominal speed of the pump

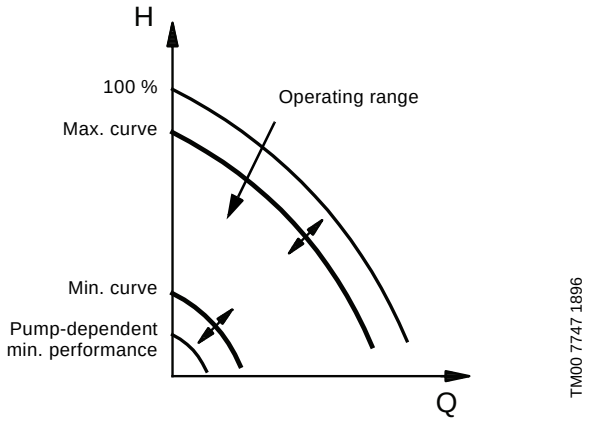

Fig. 28 Operating range of the CUE

Motor bearing monitoring

This function is used to give an indication when it is time to relubricate or change the motor bearings.

It shows these pieces of information:

- When to relubricate the motor bearings.
- How many times relubrication has been confirmed,
- When to replace the motor bearings.

Default function

The default function is based on the "mileage" of the pump and takes into account if the pump has been running with reduced speed.

Extended function

The bearing temperature is also included in the calculation.

The extended function requires an MCB 114 sensor input module and Pt100/Pt1000 sensors measuring the bearing temperature.

Monitoring of motor bearing temperatures

When temperature sensor 1 and 2 are used for measuring the motor bearing temperature, a warning or an alarm will be generated if the bearing temperature gets too high.

Warnings and alarms are generated and reset using hysteresis. See fig. 29.

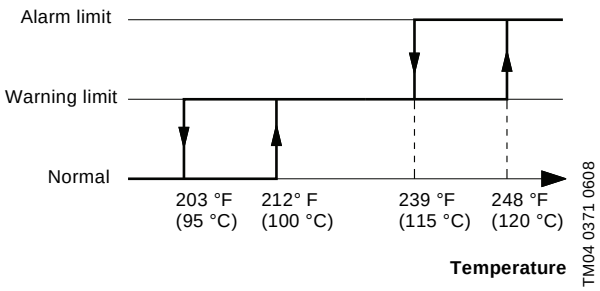

Fig. 29 Monitoring of bearing temperature with warning and alarm limits

Standstill heating

This function pre-heats the motor during standstill in order to avoid condensation within the motor.

When the pump is stopped by a stop command, a current will be applied to the motor windings in order to keep the temperature within the motor above the dew-point temperature. No external heater is needed.

The pre-heating of the motor is especially important when the motor is installed under these conditions:

- high humidity
- outdoor installation.

The consequences of condensed moisture within the motor are for example corrosion damage to electrical contacts and the bearings of the motor shaft.

Ramps

The controller incorporates two types of ramp:

- ramp-up and ramp-down (default)
- initial and final ramps (setting via PC-Tool).

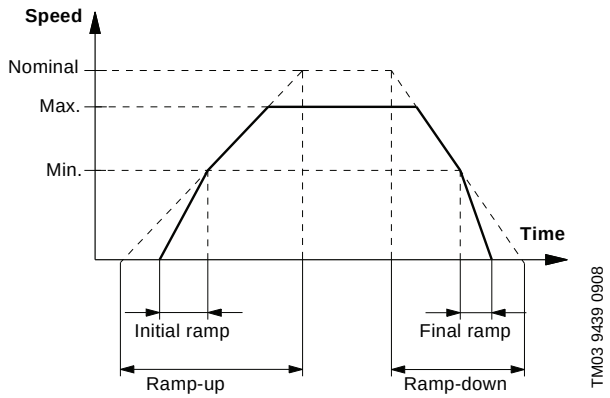

Fig. 30 Ramp-up and ramp-down of the CUE

Ramp-up and ramp-down

The ramp-up and ramp-down are used for protection against overload when starting and stopping the CUE. The setting is done by means of the control panel.

The ramp-up time is the acceleration time from 0 rpm to nominal motor speed.

The ramp-down time is the deceleration time from nominal motor speed to 0 rpm.

Additional set of ramp-up and ramp-down (setting via PC Tool)

An additional set of ramp-up and ramp-down can be remote-set to predefined ramps by means of a digital input.

Initial and final ramps

The initial and final ramps prevent operation for a longer time than necessary at speeds below minimum speed.

The setting is done automatically based on the pump family selected in the start-up guide.

Proportional differential pressure, parabolic

Setting via PC Tool.

The proportional differential pressure can be selected with one of these flow dependencies:

- linear (default), see page 15
- parabolic (setting via PC Tool).

When the flow dependency is selected as parabolic, the differential pressure of the pump will be reduced with a parabolic curve at falling flow rate and increased at rising flow rate. See fig. 31.

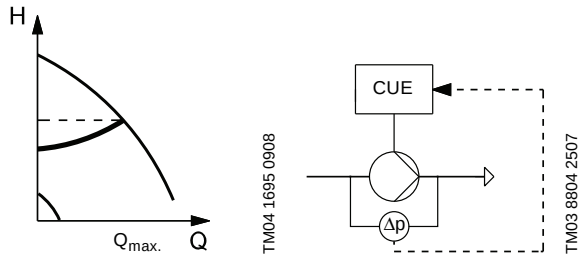

Fig. 31 Proportional differential pressure, parabolic curve

The pump is controlled according to a differential pressure measured across the pump. This means that the pump system offers a flow-compensated differential pressure in the Q-range of 0 to $Q_{max.}$, represented by the parabolic curve in the QH diagram.

Hmax update

Setting via PC Tool.

This function is used in connection with the control mode Proportional differential pressure. The purpose is to find the "true" value of the maximum head at no flow and nominal pump speed. See fig. 32.

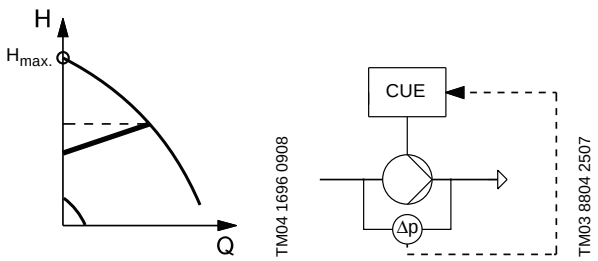

Fig. 32 Proportional differential pressure, H_{max} update

The function consists of two steps:

1. Ramping up the speed to nominal speed.
2. Measuring Hmax for 20 seconds at nominal speed.

Valves must be closed so that the pump is operating without flow.

Differential pressure from two sensors

Setting via PC Tool.

The purpose of this function is to make differential pressure control possible by using measurements from two separate pressure sensors.

It can be used in these control modes:

- Proportional differential pressure. See page 15
- Constant differential pressure. See page 15.

The function requires an MCB 114 sensor input module.

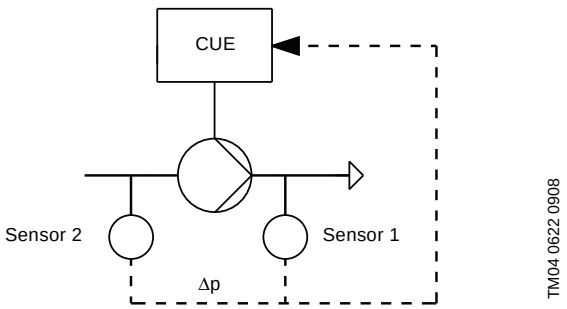

Fig. 33 Differential pressure from two sensors

Sensor 1 is connected to the sensor input 1.

Sensor 2 is connected to the sensor input 2 of an MCB 114 sensor input module.

Start delay after power-up

Setting via PC Tool.

The start delay after power-up is a delay between power being applied and the pump starting.

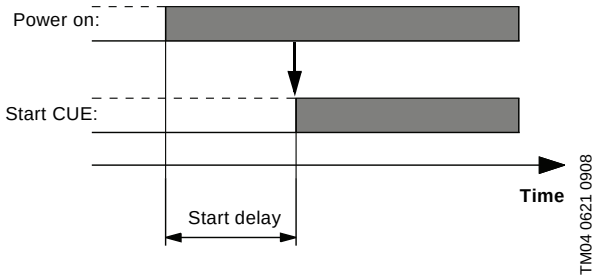

Fig. 34 Start delay after power-up

The purpose is to allow remote control equipment to start up before the pump.

The start delay is deactivated if a remote command is received via GENIbus.

Auto/manual restart after alarm

Setting via PC Tool.

In case of an alarm, the CUE will stop the pump or change the operating mode, depending on the alarm and pump type. See Warning and alarm list on page 38.

Pump operation will be resumed when the cause of the alarm has been remedied and the alarm has been reset automatically or manually.

The CUE can be configured to activate and deactivate automatic restart for all alarms or for groups of alarms.

Limit exceeded

Setting via PC Tool.

This is a monitoring function offering information, warning or alarm when a low or high limit is exceeded. See fig. 35.

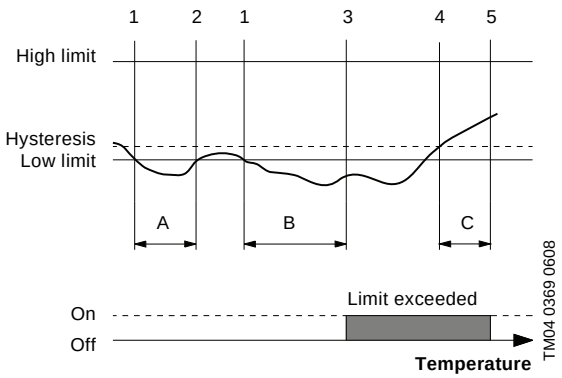

Fig. 35 Example of low limit exceeded

Description

The function has two timers: a detection delay timer and a reset delay timer.

The detection delay timer starts when a limit is exceeded (1). See fig. 35. The time is configurable.

A: If the limit is no longer exceeded (2) when the detection time expires, the timer will be reset.

B: If the limit is still exceeded (3) when the detection time expires, the output of the detector will change to “limit exceeded”.

The reset delay timer starts when the detector output is “limit exceeded” and the limit is no longer exceeded, using hysteresis (4).

C: When the delay time has expired (5), the detector output changes to “limit not exceeded”.

Input possibilities

It is possible to have two limit exceeded functions in parallel with these inputs:

- all analog inputs
- all Pt100/Pt1000 inputs.

The use of Pt100/Pt100 inputs requires an MCB 114 sensor input module.

Output possibilities

There are these output possibilities:

- signal relay 1 and 2
- analog output
- warning and alarm.

Digital inputs

As standard, the CUE offers these digital inputs:

- one digital input for external start/stop
- three programmable digital inputs.

The three digital inputs can be set to these functions:

- min. (min. curve)
- max. (max. curve)
- external fault
- flow switch
- alarm reset
- dry-running protection (via external switch)
- accumulated flow (pulse flow, only DI 4)
- predefined ramps (setting via PC Tool)
- predefined setpoints (setting via PC Tool).

Start/stop

The pump will start if the pump is ready to run (the state of the on/off button is on, and no alarms prevent the pump from running.

Min.

The pump will run according to the min. curve.

Max.

The pump will run according to the max. curve.

External fault

If the input is activated for more than 5 seconds, external fault will be indicated.

Flow switch

The flow switch indicates no flow in constant pressure with stop function and constant level with stop function. It requires an external signal from a flow switch or a controller.

Alarm reset

When the input has been activated, the alarm will be reset if the cause of the alarm no longer exists.

Dry running

Indicates lack of inlet pressure or water shortage, and the pump will be stopped. The pump cannot restart as long as the input is activated. Restart may be delayed by up to 30 minutes, depending of the pump family.

For further information, see page 23.

Accumulated flow (only DI 4)

The number of pulses is counted and multiplied by the litre/pulse parameter in order to get the accumulated flow. This requires the use of an accessory, such as a pulse sensor.

Predefined ramps (setting via PC Tool)
The ramp-up and ramp-down time can be remote-set from the default setting to a predefined setting by means of PC Tool.

For further information, see page 25.

Predefined setpoints (setting via PC Tool)
One to seven predefined setpoints can be selected via digital inputs configured for this purpose.

For further information, see Predefined setpoints on page 19.

Signal relays

The two relay outputs can be independently set to these indications:

- ready
- alarm
- operation
- pump running
- warning
- relubricate
- external control (setting via PC Tool)
- limit exceeded (setting via PC Tool).

Ready
The pump is ready to run or running.

Warning
There is a warning.

Alarm
There is an alarm.

Operation
The pump is running or has been stopped by a stop function.

Pump running
The pump is running.

Relubricate
Lubrication time is exceeded.

External relay control (setting via PC Tool)
This function offers information, warning or alarm when a signal is given via GENIbus.

Limit exceeded (setting via PC Tool)
This function offers information, warning or alarm when a low or high limit is exceeded.

Analog inputs

As standard, the CUE offers these analog inputs:
- one analog input for external setpoint
- one analog input for sensor 1.

External setpoint
The setpoint can be influenced by connecting an analog signal to the setpoint input.

For further information, see page 17.

Sensor 1
The sensor 1 is default used for control in closed loop.

In closed loop, the feedback signal is kept at a given setpoint by a PID controller.

In open loop, sensor 1 can be used for monitoring.

Analog output

The analog output (0-20 mA) can be set via the PC Tool to one of these indications:
- feedback value
- speed
- frequency
- motor current
- external setpoint input
- limit exceeded.

The analog output is default set to not active.

Feedback value
The output signal is a function of the actual feedback value.

Speed
The output signal is a function of the actual pump speed.

Frequency
The output signal is a function of the actual frequency.

Motor current
The output signal is a function of the actual motor current.

External setpoint input
The output signal is a function of the external setpoint input.

Limit exceeded
The output signal indicates whether the limit is exceeded:

- Minimum output = limit is not exceeded.
- Maximum output = limit is exceeded.

Default setting is NOT ACTIVE.

MCB 114 sensor input module

The MCB 114 sensor input module offers three additional analog inputs for the CUE:

- one analog 4-20 mA input for an additional sensor
- two analog Pt100/Pt1000 inputs for temperature sensors.

Sensor 2

The analog 4-20 mA input is used for these functions:

- Monitoring of measured value of sensor 2 (default setting).
- Measured value of sensor 2 used for control purpose. This makes differential pressure control possible by using measurements from sensor 1 and sensor 2 (setting by means of PC Tool).

Temperature sensors 1 and 2

The analog Pt100/Pt1000 inputs are used for monitoring of these temperatures:

- drive-end motor bearing
- non drive-end motor bearing
- other liquid 1
- other liquid 2
- motor windings
- pumped liquid
- ambient temperature.

Displays

MCB 114 input	Display Menu Number	
	Reading	Setting
Sensor 2	(2.5)	(3.16)
Temperature sensor 1	(2.12)	(3.21)
Temperature sensor 2	(2.13)	(3.22)

Further information

See MCB 114 sensor input module, page 53.

See also the CUE and MCB 114 installation and operating instructions.

GENIbus

The CUE supports serial communication via the RS-485 connection. The communication enables connection to a building management system or another external control system.

Operating parameters, such as setpoint and operating mode, can be remote-set via the bus signal. At the same time, the pump can provide status information about important parameters, such as actual value of control parameter, input power and fault indications.

Protocol

Using GENIbus interface, the protocol selection of the RS-485 port must be selected to GENIbus, and the communication must be set according to the Grundfos GENIbus standard.

Pump number

Using GENIbus interface, a pump number between 1 and 199 must be allocated to each pump via the control panel.

Local/remote operating mode

In local operating mode, the unit is controlled from local sources, i.e. control panel and digital input.

In remote operating mode, the unit is controlled via GENIbus. Change to remote operating mode is done via the GENIbus.

Priority of settings

The CUE can be controlled in various ways at the same time. If two or more operating modes are active at the same time, the operating mode with the highest priority will be in force.

Local operating mode

Priority	CUE menu	External signal
1	Stop	
2	Max.	
3		Stop
4		Max.
5	Min.	Min.
6	Normal	Normal

Example: If an external signal has activated the operating mode *Max.*, it will only be possible to stop the pump.

Remote operating mode

Priority	CUE menu	External signal	Bus signal
1	Stop		
2	Max.		
3		Stop	Stop
4			Max.
5			Min.
6			Normal

Example: If the bus signal has activated the operating mode *Max.*, it will only be possible to stop the pump.

Copy of Settings

The Grundfos Local Control Panel (GLCP) can be used to copy the settings made on one CUE to another CUE.

The function includes two different possibilities:

- Make a copy of the setup from the present CUE to the Grundfos Local Control Panel
- Make a copy of the setup stored in the Grundfos Local Control Panel to the CUE

Both functions must be used in the correct order to copy a setup from one CUE to another.

A setup can be used for more than once, when it is loaded into the Grundfos Local Control Panel.

The copy can only be performed between units of the same size and firmware version.

Pipe fill (PC Tool)

The pipe fill function is used for filling empty pipes with water in a controlled manner. With pipe fill disabled the speed will go to maximum speed when filling the pipes in pressure controlled systems where pipes are empty at start up, and when the pipes are filled the high speed will give pressure spikes in the system, before the speed is reduced properly to fit the actual need in the application.

The pipe filling function can be used to avoid these pressure spikes, by introducing a pipe filling sequence before the system is turned into normal operation.

The pipe filling function can limit the speed of the pump during fill mode operation; this will decrease the pressure spikes at full pipes. A time limit or a filled pipe pressure can be used to deactivate the pipe fill function and turn the CUE into normal operation.

The following parameters are used in fill mode:

Pipe fill

- Activate or deactivate the function

Pipe fill speed

- The maximum speed used during pipe filling (horizontal piping)

Pipe fill time

- The time it takes to fill the pipes, the CUE turns into normal operation when the pipe fill time has passed

Pipe fill rate

- If a vertical pipe system is being filled a pipe fill rate in scale of the used transmitter can be used to limit the pipe filling rate Example: [0.3bar/sec] (vertical piping)

Filled setpoint

- The setpoint where the pipe fill function is deactivated and the CUE turns into normal operation.

Mechanical installation

The CUE cabinet sizes are characterised by their enclosure. The CUE is available in three enclosure classes: IP21, IP54 and IP55. To see the relationship of enclosure class and enclosure type, see tables starting on page 41.

The general installation requirements necessitate special considerations as to these aspects:

- Enclosure class IP54/55 must be installed freely accessible, but must not be installed outdoors without additional protection against water and the sun.
- The CUE contains a large number of mechanical and electronic components and must therefore not be installed in an environment where the air contains liquids, particles or gasses which may affect and damage the electronic components.
- In applications requiring Ex approval, the CUE should be installed outside the hazardous area.

Space requirements and air circulation

CUE units can be mounted side by side, but as a sufficient air circulation is required for cooling, these requirements must be met:

- Sufficient free space above and below the CUE. See table below.
- Hang the CUE directly on the wall, or fit it with a back plate to secure sufficient air flow for cooling. See fig. 36.

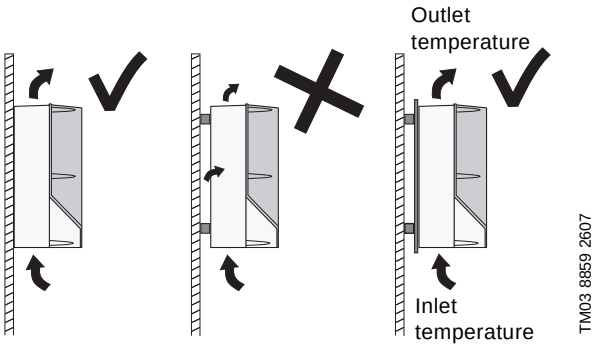

Fig. 36 CUE hung directly on the wall or fitted with a back plate

Required free space above and below the CUE

Enclosure	Space - in [mm]
A2, A3, A5	4 (100)
B1, B2, B3, B4, C1, C3	8 (200)
C2, C4, D1, D2	9 (225)

Required free space in front of the CUE

Furthermore, there must be sufficient space in front of the CUE for opening the door of the CUE. See fig. 37.

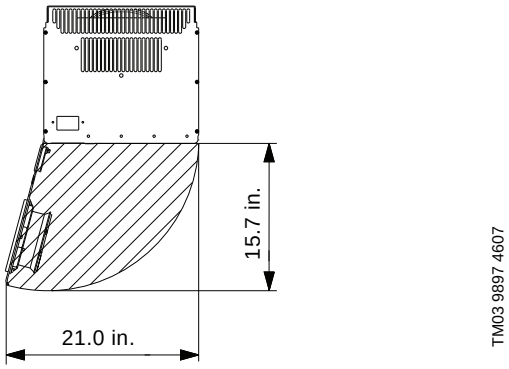

Fig. 37 Free space in front of CUE enclosures D1 and D2

Ventilation of built-in CUE

The CUE can be mounted in a control cabinet if sufficient air circulation is ensured. The quantity of air flow required for cooling the CUE can be calculated as follows:

$$q_v = \frac{\sum P \times 3.285}{\Delta T} \qquad [ft^3/min]$$

Insert P in Watt and ΔT in F (Fahrenheit.

P is the power loss of all equipment integrated in the same cabinet. Calculate the power loss P of the CUE by means of the typical shaft power P2 multiplied by the efficiency.

ΔT is the difference between the outlet temperature and the inlet temperature (ambient) of the cooling air. See fig. 36.

Note: The inlet and outlet temperatures must not be higher than the values in the table below.

Output current	Max. inlet temperature	Max. outlet temperature
Up to 177 amps	122 °F (50 °C)	131 °F (55 °C)
Over 177 amps	113°F (45 °C)	122 °F (50 °C)

The average inlet temperature over 24 hours must be 9 °F lower.

The outlet from the ventilation must be placed above the highest-mounted CUE. Allowance must be made for the pressure loss across the inlet filters of the control panel and for the fact that the pressure will drop as the filters get choked.

Example: Calculate the required air flow for cooling of a built-in CUE when the ambient temperature is 80° F (27 °C). The CUE has a typical shaft power of 11.0 kW (ISHP) and an efficiency of 0.98. See page 44.

Calculate the power loss of the CUE:

P = P2 x efficiency = 11.0 x (1-0.98) x 1000= 220 W.

Calculate the required air flow for cooling the CUE:

q_v = (P x 3.285) / (ΔT) = (220 x 3.285) / (131-80) = **14.2 ft^3/min**.

Electrical installation

Note: Always observe national and local regulations as to cable cross-section, short circuit protection and over-current when installing the CUE.

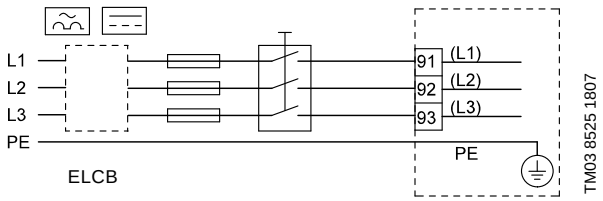

Fig. 38 Example of three-phase mains connection of the CUE with mains switch, back-up fuses and additional protection

Electrical protection

Protection against electric shock, indirect contact

Protective conductors must always have a yellow/green (PE) or yellow/green/blue (PEN) colour marking.

Instructions according to EN IEC 61800-5-1:

- The CUE must be stationary, installed permanently and connected permanently to the mains supply.
- The earth connection must be carried out with duplicate protective conductors or with a single reinforced protective conductor with a cross-section of minimum 8 AWG [10 mm^2].

Protection against short-circuit, fuses

The CUE and the supply system must be protected against short-circuit.

Grundfos demands that the fuses mentioned on 48 are used for protection against short-circuit.

The CUE offers complete short-circuit protection in case of a short-circuit on the motor output.

Additional protection

Note: The leakage current to earth exceeds 3.5 A.

If the CUE is connected to an electrical installation where an earth leakage circuit breaker (ELCB) is used as additional protection, the circuit breaker must be of a type marked with the following symbols:

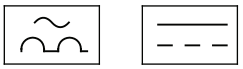

ELCB

The circuit breaker is **type B**.

The total leakage current of all the electrical equipment in the installation must be taken into account.

Leakage current of the CUE in normal operation, see page 51.

During start and in asymmetrical supply systems, the leakage current can be higher than normal and may cause the ELCB to trip.

Motor protection

The motor requires no external motor protection. The CUE protects the motor against thermal overloading and blocking.

Protection against overcurrent

The CUE has an internal overcurrent protection for overload protection on the motor output.

Protection against mains voltage transients

The CUE is protected against mains voltage transients according to EN 61800-3, second environment.

Mains and motor connection

The supply voltage and frequency are marked on the CUE nameplate. Make sure that the CUE is suitable for the electricity supply of the installation site.

Mains switch

A mains switch can be installed before the CUE according to local regulations. See fig. 38.

Wiring diagram

The wires in the terminal box must be as short as possible. Excepted from this is the protective conductor which must be so long that it is the last one to be disconnected in case the cable is inadvertently pulled out of the cable entry.

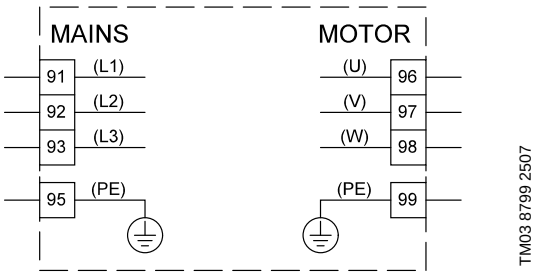

Fig. 39 Wiring diagram, three-phase mains connection

Terminal		Function
91	(L1)	Three-phase supply
92	(L2)	
93	(L3)	
95/99	(PE)	Earth connection
96	(U)	Three-phase motor connection, 0-100 % of mains voltage
97	(V)	
98	(W)	

Note: use terminals 91 and 92 for single phase CUE's.

Connecting the signal terminals

Note: As a precaution, signal cables must be separated from other groups by reinforced insulation in their entire lengths.

Note: If no external on/off switch is connected, short-circuit terminals 18 and 20 using a short wire.

Wiring diagram, signal terminals

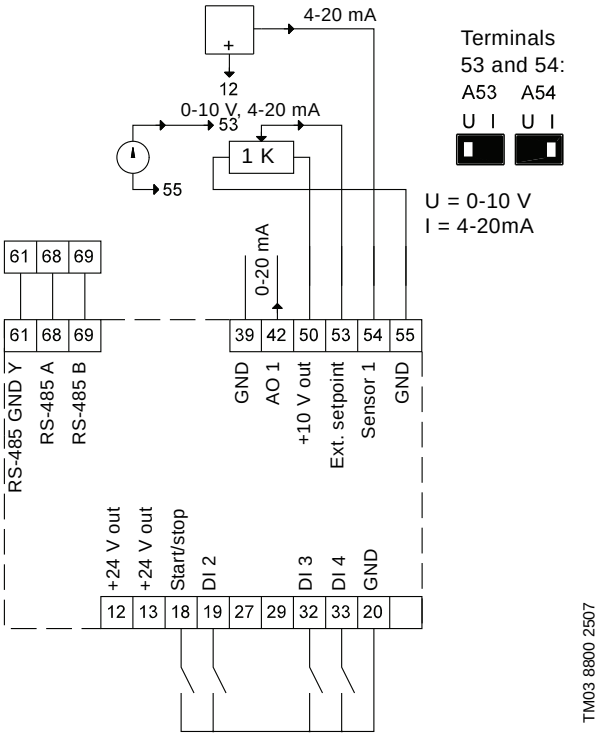

Fig. 40 Wiring diagram, signal terminals

Terminal	Type	Function
12	+24 V out	Supply to sensor
13	+24 V out	Additional supply
18	DI 1	Digital input, start/stop
19	DI 2	Digital input, programmable
20	GND	Common frame for digital inputs
32	DI 3	Digital input, programmable
33	DI 4	Digital input, programmable
39	GND	Frame for analog output
42	AO 1	Analog output, 0-20 mA
50	+10 V out	Supply to potentiometer
53	AI 1	External setpoint, 0-10 V, 0/4-20 mA
54	AI 2	Sensor input, sensor 1, 0/4-20 mA
55	GND	Common frame for analog inputs
61	RS-485 GND Y	GENIbus, screen (frame)
68	RS-485 A	GENIbus, signal A (+)
69	RS-485 B	GENIbus, signal B (-)

Terminals 27 and 29 are not used.

Connect the signal cables according to the guidelines for good practice to ensure EMC-correct installation. See section *EMC-correct installation*, 35.

- Use shielded signal cables.
- Use a 3-conductor shielded bus cable.

RFI filters

To meet the EMC requirements, the CUE comes with the following types of built-in radio frequency interference filter (RFI).

Voltage	Typical shaft power P2	RFI filter type
1 x 200-240 V	1.5-10 Hp (1.1-7.5 kW)	C1
3 x 200-240 V	1-60 Hp (0.75-45 kW)	C1
3 x 380-500 V	0.75-125 Hp (0.55-90 kW)	C1
	150-350 Hp (110-250 kW)	C2
3 x 525-600 V	1-10 Hp (0.75-7.5 kW)	C3
3 x 525-690 V	15-350 Hp (11-250 kW)	C3

RFI filter types are according to EN 61800-3.

C1 is a high-performance filter. C2 and C3 are typically RFI filter types for standard frequency converters.

Description of RFI filter types

C1: For use in domestic areas.

C2: For use in domestic and industrial areas, connected permanently to the mains supply. In domestic areas, special care should be taken regarding EMC-correct installation.

C3: For use in industrial areas with own low-voltage transformer.

Equipment of category C2

- In a domestic environment this product may cause radio interference in which case supplementary mitigation measures may be required.

Equipment of category C3

- This type of power drive system (PDS) is not intended to be used on a low-voltage public network which supplies domestic premises.
- Radio frequency interference is expected if used on such a network.

Output filters

Output filters are used for reducing the voltage stress on the motor windings and the stress on the motor insulation system as well as for decreasing acoustic noise from the frequency converter-driven motor.

Grundfos offers two types of output filter as accessories for the CUE:

- dU/dt filters
- sine-wave filters

The filters are IP20/NEMA1 enclosure.

dU/dt filters

Motor insulation stress is often caused by the combination of rapid voltage and current increase. The rapid energy changes can also be reflected back to the DC line in the inverter and cause shut down. The dU/dt filter is designed to reduce the voltage rise time/the rapid energy change in the motor, and by that intervention, it prevents premature aging and flashover in the motor insulation.

The dU/dt filters have a positive influence on the radiation of magnetic noise in the cable that connects the drive to the motor. The voltage wave form is still pulse-shaped but the du/dt ratio is reduced in comparison with the installation without filter.

Sine-wave filters

Sine-wave filters are designed to allow only low frequencies to pass. High frequencies are consequently shunted away, which results in a sinusoidal phase-to-phase voltage waveform and sinusoidal current waveforms.

With the sinusoidal waveforms, the use of special adjustable frequency drive motors with reinforced insulation is no longer needed. The acoustic noise from the motor is also damped as a consequence of the wave condition.

Besides the features of the dU/dt filter, the sine-wave filter also reduces insulation stress and bearing currents in the motor, thus leading to prolonged motor lifetime and longer periods between service. Sine-wave filters enable use of longer motor cables in applications where the motor is installed far from the drive. The length is unfortunately limited because the filter does not reduce leakage currents in the cables.

Use of output filters

The table below explains in which cases an output filter is required. From the table it can be seen if a filter is needed, and which type to use.

The selection depends of:

- pump type
- motor cable length
- the required reduction of the acoustic noise from the motor.

Pump type	Typical shaft power P2	dU/dt filter	Sine-wave filter
SP, BM, BMB with 380 V motor and up	Up to 10 Hp	–	0-1000 ft (0-300 m)
	15 Hp and up	0-500 ft (0-150 m)	500-1000 ft (150-300 m)
Other pumps, noise reduction	Up to 10 Hp	–	0-1000 ft (0-300 m)
	15 Hp and up	0-500 ft (0-150 m)	500-1000 ft (150-300 m)
Other pumps, higher noise reduction	Up to 10 Hp	–	0-1000 ft (0-300 m)
	15 Hp and up	–	0-1000 ft (0-300 m)
Pumps with 690 V motor	All	0-500 ft (0-150 m)	500-1000 ft (150-300 m)

The lengths stated apply to the motor cable.

Motor cable

Use a shielded/armored motor cable to comply with EMC emission specifications (or install the cable in a metal conduit). Keep the motor cable as short as possible to reduce the noise level and leakage currents. Connect the motor cable shield/armor to both the decoupling plate of the adjustable frequency drive and to the metal of the motor. (Same applies to both ends of the metal conduit if used instead of a shield.)

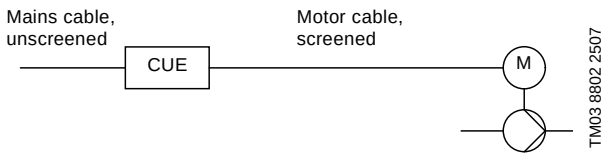

Fig. 41 Example of installation without filter

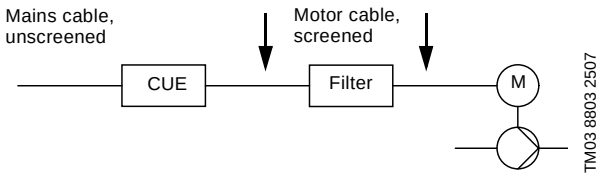

Fig. 42 Example of installation with filter. The cable between the CUE and filter must be short

EMC-correct installation

This section gives guidelines for good practice when installing the CUE. Follow these guidelines to meet EN 61800-3, first environment.

- Use only motor and signal cables with a braided metal screen in applications without output filter.
- There are no special requirements to supply cables, apart from local requirements.
- Leave the screen as close to the connecting terminals as possible. See fig. 43.
- Avoid terminating the screen by twisting the ends. See fig. 44. Use cable clamps or EMC screwed cable entries instead.
- Connect the screen to frame at both ends for both motor and signal cables. See fig. 45. If the controller has no cable clamps, connect only the screen to the CUE. See fig. 46.
- Avoid unscreened motor and signal cables in electrical cabinets with frequency converters.
- Make the motor cable as short as possible in applications without output filter to limit the noise level and minimize leakage currents.
- Screws for frame connections must always be tightened whether a cable is connected or not.
- Keep main cables, motor cables and signal cables separated in the installation, if possible.

Other installation methods may give similar EMC results if the above guidelines for good practice are followed.

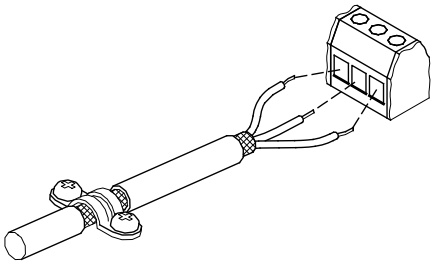

TM02 1325 0901

Fig. 43 Example of stripped cable with screen

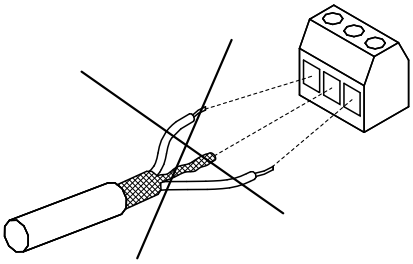

TM03 8812 2507

Fig. 44 Do not twist the screen ends

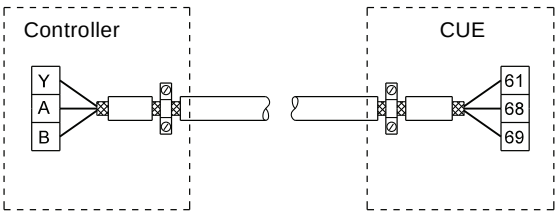

TM03 8732 2407

Fig. 45 Example of connection of a 3-conductor bus cable with screen connected at both ends

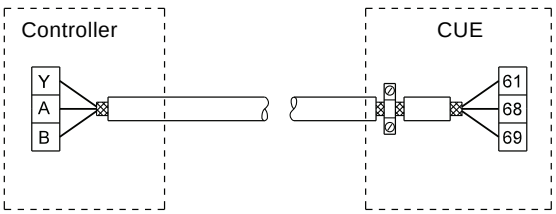

TM03 8731 2407

Fig. 46 Example of connection of a 3-conductor bus cable with screen connected at the CUE (controller with no cable clamps)

Control panel

The control panel is used for local setting of the CUE. The functions available depend on the pump family.

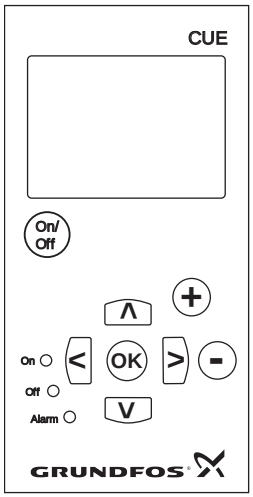

TM03 8719 2507

Fig. 47 Control panel of the CUE

Editing buttons

Button	Function
On/ Off	Makes the pump ready for operation/starts and stops the pump.
OK	Saves changed values, resets alarms and expands the value field.
+ -	Changes values in the value field.

Navigating buttons

Button	Function
< >	Navigates from one menu to another. When the menu is changed, the display shown will always be the top display of the new menu.
∧ ∨	Navigates up and down in the individual menu.

Indicator lights

The operating condition of the pump is indicated by the indicator lights on the front of the control panel. See fig. 47.

The table shows the function of the indicator lights.

Indicator light	Function
On (green)	The pump is running or has been stopped by a stop function.
	If flashing, the pump has been stopped by the user (CUE menu), external start/stop or bus.
Off (orange)	The pump has been stopped with the on/off button.
Alarm (red)	Indicates an alarm or a warning.

Start-up guide

Use the start-up guide for the general setting of the CUE including the setting of the correct direction of rotation.

The start-up guide is started the first time when the CUE is connected to supply voltage. It can be restarted in menu GENERAL. Please note that in this case all previous settings will be erased.

Warning and alarm list

Code and display text		Status: Warning	Status: Alarm	Status: Locked alarm	Operating mode	Resetting
1	Too high leakage current			●	Stop	Man.
2	Mains phase failure		●		Stop	Aut.
3	External fault		●		Stop	Man.
16	Other fault		●		Stop	Aut.
				●	Stop	Man.
30	Replace motor bearings	●			–	Man.[3]
32	Overvoltage	●			–	Aut.
			●		Stop	Aut.
40	Undervoltage	●			–	Aut.
			●		Stop	Aut.
48	Overload		●		Stop	Aut.
				●	Stop	Man.
49	Overload		●		Stop	Aut.
55	Overload	●			–	Aut.
			●		Stop	Aut.
57	Dry running		●		Stop	Aut.
64	Too high CUE temperature		●		Stop	Aut.
70	Too high motor temperature		●		Stop	Aut.
77	Communication fault, duty/standby	●			–	Aut.
89	Sensor 1 outside range		●		[1]	Aut.
91	Temperature sensor 1 outside range	●			–	Aut.
93	Sensor 2 outside range	●			–	Aut.
96	Setpoint signal outside range		●		[1]	Aut.
148	Too high bearing temperature	●			–	Aut.
			●		Stop	Aut.
149	Too high bearing temperature	●			–	Aut.
			●		Stop	Aut.
155	Inrush fault		●		Stop	Aut.
175	Temperature sensor 2 outside range	●			–	Aut.
240	Relubricate motor bearings	●			–	Man.[3]
241	Motor phase failure	●			–	Aut.
			●		Stop	Aut.
242	AMA[2] did not succeed	●			–	Man.

[1] In case of an alarm, the CUE will change the operating mode depending on the pump type. For example: In constant pressure mode, SP's will run at min. speed while CR's will run at 70% of max. speed.

[2] AMA, Automatic Motor Adaptation.

[3] Warning is reset in display 3.20.

In case of fault or malfunction of the CUE, the latest five warnings and latest five alarms can be found in the log menus.

Warning

The CUE will continue the operation as long as the warning is active. The warning remains active until the cause no longer exists. Some warnings may switch to alarm condition if the warning has been present for a period.

Alarm

In case of an alarm, the CUE will stop the pump or change the operating mode depending on the alarm type and pump type.

Pump operation will be resumed when the cause of the alarm has been remedied and the alarm has been reset.

Resetting an alarm manually

- Press OK in the alarm display.
- Press On/Off twice.
- Activate a digital input DI 2-DI 4 set to *Alarm reset* or the digital input DI 1 (S*tart/stop)*.

If it is not possible to reset an alarm, the reason may be that the fault has not been remedied, or that the alarm has been locked.

Locked alarm

In case of a locked alarm, the CUE will stop the pump and become locked. Pump operation cannot be resumed until the cause of the locked alarm has been remedied and the alarm has been reset.

Resetting a locked alarm

- Switch off the electricity supply to the CUE for approx. 30 seconds. Switch on the electricity supply, and press OK in the alarm display to reset the alarm.

CUE selection

How to select a CUE

The size of the CUE is determined quickly and precisely based on the max. motor current. See fig. 48.

The power size, which is the typical shaft power P2, is only an approximate value and cannot be used to select the nominal size of the CUE.

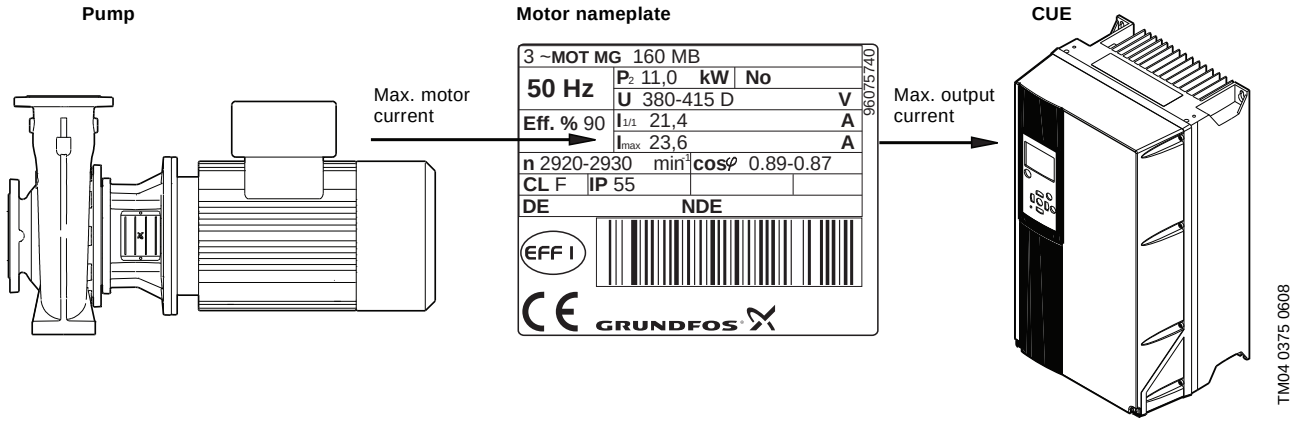

Fig. 48 Selection of CUE based on max. motor current

The main steps

When you have selected the pump, follow these steps to select a CUE:

1. Select the voltage range of the CUE. It should fit the motor voltage and the mains supply at the installation site.
2. Find the max. motor current*****on the motor nameplate or in the data sheet of the selected motor. Select the first CUE that is able to deliver the max. motor current. See selection tables starting on page 41.
3. Select the enclosure class. Choose IP21 or IP54/55. See selection tables starting on page 41.
4. Check if an output filter is required. Select the output filter according to the table on page 34.
5. Select the accessories required for the application. It could be sensors or additional input modules.

Selecting the different accessories may require additional steps.

*** Important note: If motor has service factor, use service factor amperes for max. motor current.**

The actual motor current should always be less than or equal to the output current of the CUE.

If not, the CUE will reduce the maximum speed when the maximum limit is reached during operation.

Example 1

These data are given:

- voltage range is 3 x 460 V
- max. motor current is 23.6 A.
- enclosure class of the CUE must be IP21.

Select the CUE according to the selection tables in section Mains supply 3 x 440 - 500V on 43.

Data of the CUE selected:

Max. output current:	27A
Product number (IP21):	91136772

Special conditions

Derating must be taken into account when using the CUE in these situations:

- low air pressure (heights)
- low speeds
- installations with long motor cables
- cables with a large cross-section
- high ambient temperature.

The required action is described in the next sections.

Low air pressure

At low air pressure, the cooling capability of air is reduced.

At altitudes above 3,280 ft (1,000 m), the max. output current should be derated in accordance with the diagram in fig. 49.

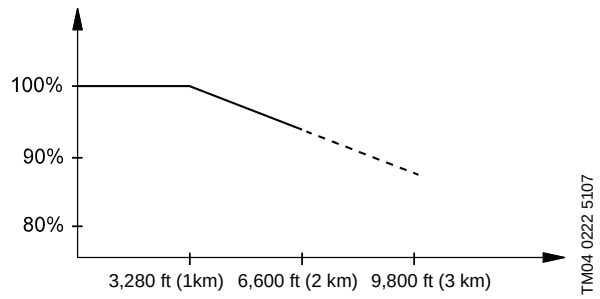

Fig. 49 Derating of output current at low air pressure

At altitudes above 6,600 ft (2,000 m), PELV cannot be met. PELV = Protective Extra Low Voltage.

An alternative is to lower the ambient temperature at high altitudes and thereby ensure 100% output current at high altitudes.

Example 2

At an altitude of 6,600 ft (2,000 m), the output current 27 A of the selected CUE in example 1 must be derated to 92% according to fig. 49. This is equal to 25 A.

High ambient temperature

If the output current is reduced to 80 % of the nominal output current of the CUE in questions, the ambient may be 5 °C higher.

The other possibility is to use a unit one size bigger. For higher temperature increases, bigger units are required. The efficiency of the CUE will, however, be reduced at higher temperatures.

If the CUE gets too hot, it will reduce the switching frequency.

Note that the nominal temperature rating depends on the enclosure type.

The maximum ambient temperature of the different enclosures can be found in section *Technical data* on p. 45.

CUE selection

Selection tables

Mains supply 1 x 200-240 V

Rated Input Voltage	CUE output amps	enclosure rating	CUE only part number	CUE constant pressure* part number	Enclosure	Max conductor (AWG)	Efficiency	output filter	
								dU/dt	Sine wave
1 x 200-240V	6.6	IP21	91136746	91136789	A3	10	0.96		96754973
	6.6	IP55	91136854	91136908	A5	10	0.96		96754973
	7.5	IP21	91136832	91136843	B1	8	0.96		96754973
	7.5	IP55	91136855	91136909	B1	8	0.96		96754973
	10.6	IP21	91136833	91136844	B1	8	0.96		96754976
	10.6	IP55	91136856	91136910	B1	8	0.96		96754976
	12.5	IP21	91136834	91136845	B1	8	0.96		96754976
	12.5	IP55	91136857	91136911	B1	8	0.96		96754976
	16.7	IP21	91136835	91136846	B1	8	0.96		96754976
	16.7	IP55	91136858	91136912	B1	8	0.96		96754976
	24.2	IP21	91136836	91136847	B1	8	0.98		96754977
	24.2	IP55	91136859	91136913	B1	8	0.98		96754977
	30.8	IP21	91136837	91136848	B2	2	0.98		96754978
	30.8	IP55	91136860	91136914	B2	2	0.98		96754978

* includes CUE and 0-120 psi 4-20mA sensor

CUE selection

Mains supply 3 x 200-240 V

Rated Input Voltage	CUE output amps	enclosure rating	CUE only part number	CUE constant pressure* part number	Enclosure	Max conductor (AWG)	Efficiency	output filter	
								dU/dt	Sine wave
3 x 200-240V	4.6	IP21	91136747	91136790	A2	10	0.95		96754973
	4.6	IP55	91136861	91136915	A5	10	0.95		96754973
	6.6	IP21	91136748	91136791	A2	10	0.96		96754973
	6.6	IP55	91136862	91136916	A5	10	0.96		96754973
	7.5	IP21	91136749	91136792	A2	10	0.96		96754973
	7.5	IP55	91136863	91136917	A5	10	0.96		96754973
	10.6	IP21	91136750	91136793	A2	10	0.96		96754976
	10.6	IP55	91136864	91136918	A5	10	0.96		96754976
	12.5	IP21	91136751	91136794	A3	10	0.96		96754976
	12.5	IP55	91136865	91136919	A5	10	0.96		96754976
	16.7	IP21	91136752	91136795	A3	10	0.96		96754976
	16.7	IP55	91136866	91136920	A5	10	0.96		96754976
	24.2	IP21	91136753	91136796	B3	8	0.96		96754977
	24.2	IP55	91136867	91136921	B1	8	0.96		96754977
	30.8	IP21	91136754	91136797	B3	8	0.96		96754978
	30.8	IP55	91136868	91136922	B1	8	0.96		96754978
	46.2	IP21	91136755	91136798	B3	8	0.96		96755019
	46.2	IP55	91136869	91136923	B1	8	0.96		96755019
	59.4	IP21	91136756	91136799	B4	2	0.96		96755021
	59.4	IP55	91136870	91136924	B2	2	0.96		96755021
	74.8	IP21	91136757	91136800	B4	1/0	0.96		96755032
	74.8	IP55	91136871	91136925	C1	1/0	0.96		96755032
	88	IP21	91136758	91136801	C3	1/0	0.97		96755033
	88	IP55	91136872	91136926	C1	1/0	0.97		96755033
	115	IP21	91136759	91136802	C3	1/0	0.97		96755033
	115	IP55	91136873	91136927	C1	1/0	0.97		96755033
	143	IP21	91136760	91136803	C4	4/0	0.97		96755034
	143	IP55	91136874	91136928	C2	4/0	0.97		96755034
	170	IP21	91136761	91136804	C4	250 MCM	0.97		96755034
	170	IP55	91136875	91136929	C2	250 MCM	0.97		96755034

* includes CUE and 0-120 psi 4-20mA sensor

CUE selection

Mains supply 3 x 440 - 500V

Rated Input Voltage	CUE output amps	enclosure rating	CUE only part number	CUE constant pressure* part number	Enclosure	Max conductor (AWG)	Efficiency	output filter	
								dU/dt	Sine wave
3 x 440 - 500V	1.6	IP21	91136762	91136805	A2	10	0.95		96754941
	1.6	IP55	91136876	91136930	A5	10	0.95		96754941
	2.1	IP21	91136763	91136806	A2	10	0.96		96754941
	2.1	IP55	91136877	91136931	A5	10	0.96		96754941
	2.7	IP21	91136764	91136807	A2	10	0.96		96754972
	2.7	IP55	91136878	91136932	A5	10	0.96		96754972
	3.4	IP21	91136765	91136808	A2	10	0.97		96754972
	3.4	IP55	91136879	91136933	A5	10	0.97		96754972
	4.8	IP21	91136766	91136809	A2	10	0.97		96754973
	4.8	IP55	91136880	91136934	A5	10	0.97		96754973
	6.3	IP21	91136767	91136810	A2	10	0.97		96754973
	6.3	IP55	91136881	91136935	A5	10	0.97		96754973
	8.2	IP21	91136768	91136811	A2	10	0.97		96754974
	8.2	IP55	91136882	91136936	A5	10	0.97		96754974
	11	IP21	91136769	91136812	A3	10	0.97		96754976
	11	IP55	91136883	91136937	A5	10	0.97		96754976
	14.5	IP21	91136770	91136813	A3	10	0.97		96754976
	14.5	IP55	91136884	91136938	A5	10	0.97		96754976
	21	IP21	91136771	91136814	B3	8	0.98	96755062	96754977
	21	IP55	91136885	91136939	B1	8	0.98	96755062	96754977
	27	IP21	91136772	91136815	B3	8	0.98	96755063	96754978
	27	IP55	91136886	91136940	B1	8	0.98	96755063	96754978
	34	IP21	91136773	91136816	B3	8	0.98	96755063	96754978
	34	IP55	91136887	91136941	B1	8	0.98	96755063	96754978
	40	IP21	91136774	91136817	B4	2	0.98	96755063	96755019
	40	IP55	91136888	91136942	B2	2	0.98	96755063	96755019
	52	IP21	91136775	91136818	B4	2	0.98	96755064	96755021
	52	IP55	91136889	91136943	B2	2	0.98	96755064	96755021
	65	IP21	91136776	91136819	B4	1/0	0.98	96755064	96755032
	65	IP55	91136890	91136944	C1	1/0	0.98	96755064	96755032
	80	IP21	91136777	91136820	C3	1/0	0.98	96755066	96755033
	80	IP55	91136891	91136945	C1	1/0	0.98	96755066	96755033
	105	IP21	91136778	91136821	C3	1/0	0.98	96755066	96755033
	105	IP55	91136892	91136946	C1	1/0	0.98	96755066	96755033
	130	IP21	91136779	91136822	C4	4/0	0.98	96755067	96755034
	130	IP55	91136893	91136947	C2	4/0	0.98	96755067	96755034
	160	IP21	91136780	91136823	C4	250 MCM	0.99	96755067	96755034
	160	IP55	91136894	91136948	C2	250 MCM	0.99	96755067	96755034
	190	IP21	96754649	-	D1	2 x 2/0	0.98	96755069	96755037
	190	IP54	96754666	-	D1	2 x 2/0	0.98	96755069	96755037
	240	IP21	96754651	-	D1	2 x 2/0	0.98	96755069	96755037
	240	IP54	96754669	-	D1	2 x 2/0	0.98	96755069	96755037

* includes CUE and 0-120 psi 4-20mA sensor

CUE selection

Mains supply 3 x 525-600 V

Rated Input Voltage	CUE output amps	enclosure rating	CUE only part number	CUE constant pressure* part number	Enclosure	Max conductor (AWG)	Efficiency	output filter	
								dU/dt	Sine wave
3 x 525 - 600V	1.7	IP21	91136781	91136824	A3	10	0.97		96755040
	1.7	IP55	91136900	91136954	A5	10	0.97		96755040
	2.4	IP21	91136782	91136825	A3	10	0.97		96755040
	2.4	IP55	91136901	91136955	A5	10	0.97		96755040
	2.7	IP21	91136783	91136826	A3	10	0.97		96755040
	2.7	IP55	91136902	91136956	A5	10	0.97		96755040
	3.9	IP21	91136784	91136827	A3	10	0.97		96755040
	3.9	IP55	91136903	91136957	A5	10	0.97		96755040
	4.9	IP21	91136785	91136828	A3	10	0.97		96755040
	4.9	IP55	91136904	91136958	A5	10	0.97		96755040
	6.1	IP21	91136786	91136829	A3	10	0.97		96755040
	6.1	IP55	91136905	91136959	A5	10	0.97		96755040
	9	IP21	91136787	91136830	A3	10	0.97		96755040
	9	IP55	91136906	91136960	A5	10	0.97		96755040
	11	IP21	91136788	91136831	A3	10	0.97		96755040
	11	IP55	91136907	91136961	A5	10	0.97		96755040

* includes CUE and 0-120 psi 4-20mA sensor

Main dimensions and weight

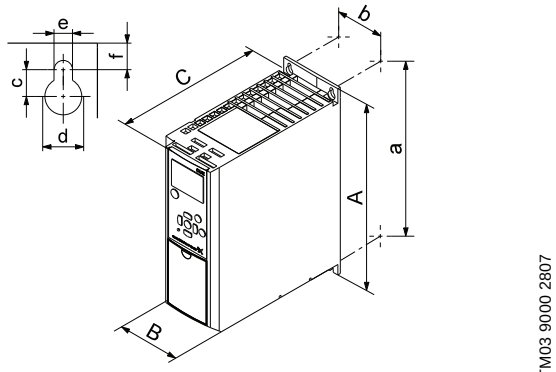

TM03 9000 2807

Fig. 50 Enclosures A2 and A3

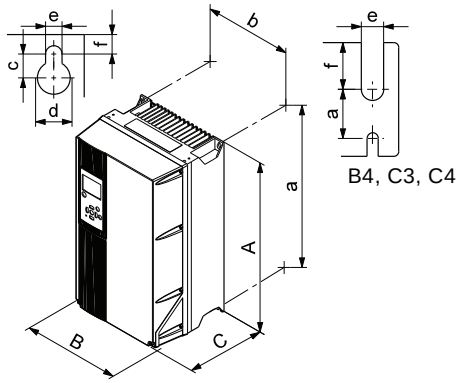

TM03 9002 2807

Fig. 51 Enclosures A5, B1, B2, B3, B4, C1, C2, C3 and C4

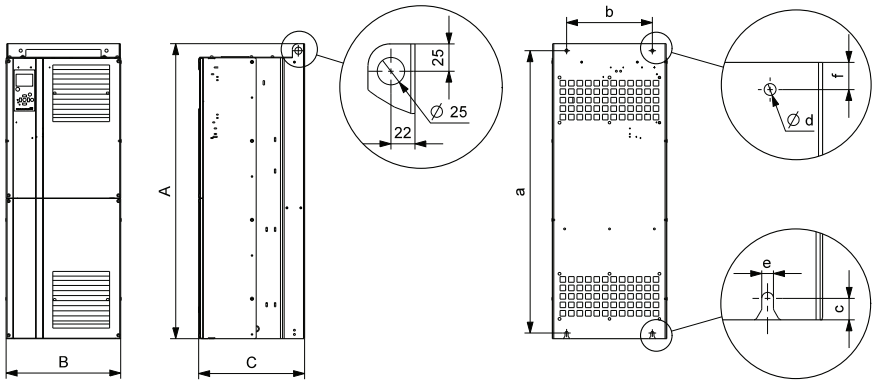

TM03 9922 4607

Fig. 52 Enclosures D1 and D2

Enclosure	Height [in (mm)] 1)		Width [in (mm)] 1)		Depth [in (mm)] 1)		Screw holes [in (mm)]				Weight [lb (kg)]
	A	a	B	b	C	C 2)	c	∅d	∅e	f	
A2	10.55 (268)	10.12 (257)	3.54 (90)	2.76 (70)	8.08 (205)	8.62 (219)	.315 (8.0)	.433 (11)	.217 (5.5)	.354 (9.0)	10.8 (4.9)
with IP21/NEMA1 kit	14.76 (375)	13.78 (350)	3.54 (90)	2.76 (70)	8.08 (205)	8.62 (219)	.315 (8.0)	.433 (11)	.217 (5.5)	.354 (9.0)	11.7 (5.3)
A3	10.55 (268)	10.12 (257)	5.12 (130)	4.34 (110)	8.08 (205)	8.62 (219)	.315 (8.0)	.433 (11)	.217 (5.5)	.354 (9.0)	14.6 (6.6)
with IP21/NEMA1 kit	14.76 (375)	13.78 (350)	5.12 (130)	4.34 (110)	8.08 (205)	8.62 (219)	.315 (8.0)	.433 (11)	.217 (5.5)	.354 (9.0)	15.4 (7.0)
A5	16.54 (420)	15.83 402)	9.53 (242)	8.47 (215)	7.87 (200)	7.87 (200)	.323 (8.2)	.472 (12)	.256 (6.5)	.354 (9.0)	30.9 (14)
B1	18.90 (480)	17.87 (454)	9.53 (242)	8.27 (210)	10.24 (260)	10.24 (260)	.472 (12 0)	.748 (19)	.354 (9.0)	.354 (9.0)	26.5 (23)
B2	25.59 (650)	24.57 (624)	9.53 (242)	8.27 (210)	10.24 (260)	10.24 (260)	.472 (12 0)	.748 (19)	.354 (9.0)	.354 (9.0)	59.5 (27)
B3	15.71 (399)	14.96 (380)	6.50 (165)	5.52 (140)	9.76 (248)	10.32 (262)	.315 (8 0)	.472 (12)	.268 (6.8)	.311 (7.9)	26.5 (12)
with IP21/NEMA1 kit	18.71 (475)	–	6.50 (165)	–	9.80 (249)	10.32 (262)	.315 (8 0)	.472 (12)	.268 (6.8)	.311 (7.9)	–
B4	20.47 (520)	19.49 (495)	9.09 in (231)	7.87 (200)	9.53 (242)	9.53 (242)	–	–	.335 (8.5)	.591 (15.0)	51.8 (23.5)
with IP21/NEMA1 kit	26.38 (670)	–	10.04 (255)	–	9.69 (246)	9.69 (246)	–	–	.335 (8.5)	.591 (15.0)	–
C1	26.77 (680)	25.52 (648)	12.13 in (308)	10.71 (272)	12.21 (310)	12.21 (310)	.472 (12 0)	.748 (19)	.354 (9.0)	.386 (9.8)	99.2 (45)

Technical data

Enclosure	Height [in (mm)] [1]		Width [in (mm)] [1]		Depth [in (mm)] [1]		Screw holes [in (mm)]				Weight [lb (kg)]
	A	a	B	b	C	C [2]	c	∅d	∅e	f	
C2	30.31 (770)	29.09 (739)	14.57 (370)	13.15 (334)	13.19 (335)	13.19 (335)	.472 (12 0)	.748 (19)	.354 (9.0)	.386 (9.8)	143.3 (65)
C3	21.65 (550)	20.51 (521)	12.13 (308)	10.63 (270)	13.11 (333)	13.11 (333)	–	–	.335 (8.5)	.669 (17.0)	77.2 (35)
with IP21/NEMA1 kit	21.65 (755)	–	12.95 (329)	–	13.27 (337)	13.27 (337)	–	–	.335 (8.5)	.669 (17.0)	–
C4	25.98 (660)	24.84 (631)	14.57 (370)	12.99 (330)	13.11 (333)	13.11 (333)	–	–	.335 (8.5)	.669 (17.0)	110 2 (50)
with IP21/NEMA1 kit	37.40 (950)	–	15.39 (391)	–	13.27 (337)	13.27 (337)	–	–	.335 (8.5)	.669 (17.0)	–
D1	47.60 (1209)	45.43 (1154)	16.54 (420)	11.97 (304)	14.96 (380)	–	.787 (20)	.433 (11)	.433 (11)	.984 (25)	229.3 (104)
D2	62.56 (1589)	60.43 (1535)	16.54 (420)	11.97 (304)	14.96 (380)	–	.787 (20)	.433 (11)	.433 (11)	.984 (25)	332.9 (151)

[1] The dimensions are maximum height, width and depth.

[2] Depth with MCB 114 option

Shipping dimensions of D1 and D2:
Height x width x length = 650 x 570 x 1730 mm.

Surroundings

Relative humidity	5-95 % RH
Minimum ambient temperature at full operation	32° F (0 °C)
Minimum ambient temperature at reduced operation	14° F (–10 °C)
Temperature during storage and transportation	–13° F to 149° F (–25 to 65 °C)
Storage duration	Max. 6 months
Maximum altitude above sea level with full performance	3,280 ft (1 km)
Maximum altitude above sea level with performance reduction	6,600 ft (2 km)
CUE, up to 160 amps	
Ambient temperature	Max. 122 °F (50 °C)
Average ambient temperature over 24 hours	Max. 113° F (45 °C)
CUE, 190 amps and above	
Ambient temperature	Max. 113° F (45 °C)
Average ambient temperature over 24 hours	Max. 104° F (40 °C)

Note: The CUE comes in a packaging which is not suitable for outdoor storage.

Sound pressure level

Maximum sound pressure level measured at a distance of 1 m from the unit:

Enclosure	Sound pressure level [dBA]
A2	60
A3	60
A5	63
B1	67
B2	70
B3	63 [1)]
B4	63
C1	62
C2	65
C3	67
C4	–
D1	76
D2	74

[1)] The sound pressure level for B3 in the 3 x 525-600 V range is 70 dBA.

The sound pressure level of a motor controlled by a frequency converter may be higher than that of a corresponding motor which is not controlled by a frequency converter.

Terminal tightening torques

Enclosure	Tightening torque [Nm]			
	Mains	Motor	Ground	Relay
A2	1.8	1.8	3	0.6
A3	1.8	1.8	3	0.6
A5	1.8	1.8	3	0.6
B1	1.8	1.8	3	0.6
B2	4.5	4.5	3	0.6
B3	1.8	1.8	3	0.6
B4	4.5	4.5	3	0.6
C1	10	10	3	0.6
C2	14[1)]/24[2)]	14[1)]/24[2)]	3	0.6
C3	10	10	3	0.6
C4	14[1)]/24[2)]	14[1)]/24[2)]	3	0.6
D1	19	19	19	0.6
D2	19	19	19	0.6

[1)] Conductor cross-section ≤ 95 mm^2.

[2)] Conductor cross-section ≥ 95 mm^2.

Cables

Cable length

Maximum length, screened motor cable	500 ft (150 m)
Maximum length, unscreened motor cable	1000 ft (300 m)
Maximum length, signal cable	1000 ft (300 m)

Cable cross-section to signal terminals

Maximum cable cross-section to signal terminals, rigid conductor	16 AWG (1.5 mm^2)
Maximum cable cross-section to signal terminals, flexible conductor	18 AWG (1.0 mm^2)
Minimum cable cross-section to signal terminals	22 AWG (0.5 mm^2)

Note: For cable cross-section to mains and motor, see next section Fuses on page 48.

Fuses

Non-UL fuses and conductor cross-section to mains and motor

Typical shaft power P2	Maximum fuse size	Fuse type	Maximum conductor cross-section
[kW]	[A]		[AWG] (mm^2)
1 x 200-240 V			
1.1	20	–	12 (4)
1.5	30	–	8 (10)
2.2	40	–	8 (10)
3	40	–	8 (10)
3.7	60	–	8 (10)
5.5	80	–	8 (10)
7.5	100	–	2 (35)
3 x 200-240 V			
0.75	10	gG	12 (4)
1.1	20	gG	12 (4)
1.5	20	gG	12 (4)
2.2	20	gG	12 (4)
3	32	gG	12 (4)
3.7	32	gG	12 (4)
5.5	63	gG	8 (10)
7.5	63	gG	8 (10)
11	63	gG	8 (10)
15	80	gG	2 (35)
18.5	125	gG	1 (50)
22	125	gG	1 (50)
30	160	gG	1 (50)
37	200	aR	3/0 (95)
45	250	aR	4/0 (120)
3 x 380-500 V			
0.55	10	gG	12 (4)
0.75	10	gG	12 (4)
1.1	10	gG	12 (4)
1.5	10	gG	12 (4)
2.2	20	gG	12 (4)
3	20	gG	12 (4)
4	20	gG	12 (4)
5.5	32	gG	12 (4)
7.5	32	gG	12 (4)
11	63	gG	8 (10)
15	63	gG	8 (10)
18.5	63	gG	8 (10)
22	63	gG	2 (35)
30	80	gG	2 (35)
37	100	gG	1 (50)
45	125	gG	1 (50)
55	160	gG	1 (50)
75	250	aR	3/0 (95)
90	250	aR	4/0 (120)
110	300	gG	2 x 70
132	350	gG	2 x 70
160	400	gG	2 x 185
200	500	gG	2 x 185
250	600	gR	2 x 185
3 x 525-600 V			
0.75	10	gG	12 (4)
1.1	10	gG	12 (4)
1.5	10	gG	12 (4)
2.2	20	gG	12 (4)
3	20	gG	12 (4)
4	20	gG	12 (4)
5.5	32	gG	12 (4)
7.5	32	gG	12 (4)
3 x 525-690 V			
11	–	–	–
15	–	–	–
18.5	–	–	–
22	–	–	–
30	–	–	–
37	–	–	–
45	–	–	–
55	–	–	–
75	–	–	–
90	–	–	–
110	225	–	2 x 70
132	250	–	2 x 70
160	350	–	2 x 185
200	400	–	2 x 185
250	500	–	2 x 185

UL fuses and conductor cross-section to mains and motor

CUE Output Amps	Fuse type							Maximum conductor cross-section
[Amp (kW)]	Bussmann RK1	Bussmann J	Bussmann T	SIBA RK1	Littel Fuse RK1	Ferraz-Shawmut CC	Ferraz-Shawmut RK1	[AWG]
1 x 200-240 V								
6.6 (1.1)	KTN-R20	–	–	–	–	–	–	10
7.5 (1.5)	KTN-R30	–	–	–	–	–	–	7
10.6 (2.2)	KTN-R40	–	–	–	–	–	–	7
12.5 (3)	KTN-R40	–	–	–	–	–	–	7
16.7 (3.7)	KTN-R60	–	–	–	–	–	–	7
24.2 (5.5)	–	–	–	–	–	–	–	7
30.8 (7.5)	–	–	–	–	–	–	–	2
3 x 200-240 V								
4.6 (0.75)	KTN-R10	JKS-10	JJN-10	5017906-010	KTN-R10	ATM-R10	A2K-10R	10
6.6 (1.1)	KTN-R20	JKS-20	JJN-20	5017906-020	KTN-R20	ATM-R20	A2K-20R	10
7.5 (1.5)	KTN-R20	JKS-20	JJN-20	5017906-020	KTN-R20	ATM-R20	A2K-20R	10
10.6 (2.2)	KTN-R20	JKS-20	JJN-20	5017906-020	KTN-R20	ATM-R20	A2K-20R	10
12.5 (3)	KTN-R30	JKS-30	JJN-30	5012406-032	KTN-R30	ATM-R30	A2K-30R	10
16.7 (3.7)	KTN-R30	JKS-30	JJN-30	5012406-032	KTN-R30	ATM-R30	A2K-30R	10
24.2 (5.5)	KTN-R50	JKS-50	JJN-50	5012406-050	KLN-R50	–	A2K-50R	7
30.8 (7.5)	KTN-R50	JKS-60	JJN-60	5012406-050	KLN-R60	–	A2K-50R	7
46.2 (11)	KTN-R60	JKS-60	JJN-60	5014006-063	KLN-R60	A2K-60R	A2K-60R	7
59.4 (15)	KTN-R80	JKS-80	JJN-80	5014006-080	KLN-R80	A2K-80R	A2K-80R	2
74.8 (18.5)	KTN-R125	JKS-150	JJN-125	2028220-125	KLN-R125	A2K-125R	A2K-125R	1/0
88 (22)	KTN-R125	JKS-150	JJN-125	2028220-125	KLN-R125	A2K-125R	A2K-125R	1/0
115 (30)	FWX-150	–	–	2028220-150	L25S-150	A25X-150	A25X-150	1/0
143 (37)	FWX-200	–	–	2028220-200	L25S-200	A25X-200	A25X-200	4/0
170 (45)	FWX-250	–	–	2028220-250	L25S-250	A25X-250	A25X-250	250 MCM
3 x 380-500 V								
1.6 (0.55)	KTS-R10	JKS-10	JJS-10	5017906-010	KTN-R10	ATM-R10	A2K-10R	10
2.1 (0.75)	KTS-R10	JKS-10	JJS-10	5017906-010	KTN-R10	ATM-R10	A2K-10R	10
2.7 (1.1)	KTS-R10	JKS-10	JJS-10	5017906-010	KTN-R10	ATM-R10	A2K-10R	10
3.4 (1.5)	KTS-R10	JKS-10	JJS-10	5017906-010	KTN-R10	ATM-R10	A2K-10R	10
4.3 (2.2)	KTS-R20	JKS-20	JJS-20	5017906-020	KTN-R20	ATM-R20	A2K-20R	10
6.3 (3)	KTS-R20	JKS-20	JJS-20	5017906-020	KTN-R20	ATM-R20	A2K-20R	10
8.2 (4)	KTS-R20	JKS-20	JJS-20	5017906-020	KTN-R20	ATM-R20	A2K-20R	10
11 (5.5)	KTS-R30	JKS-30	JJS-30	5012406-032	KTN-R30	ATM-R30	A2K-30R	10
14.5 (7.5)	KTS-R30	JKS-30	JJS-30	5012406-032	KTN-R30	ATM-R30	A2K-30R	10
21 (11)	KTS-R40	JKS-40	JJS-40	5014006-040	KLS-R40	–	A6K-40R	7
27 (15)	KTS-R40	JKS-40	JJS-40	5014006-040	KLS-R40	–	A6K-40R	7
34 (18.5)	KTS-R50	JKS-50	JJS-50	5014006-050	KLS-R50	–	A6K-50R	7
40 (22)	KTS-R60	JKS-60	JJS-60	5014006-063	KLS-R60	–	A6K-60R	2
52 (30)	KTS-R80	JKS-80	JJS-80	2028220-100	KLS-R80	–	A6K-80R	2
65 (37)	KTS-R100	JKS-100	JJS-100	2028220-125	KLS-R100	–	A6K-100R	1/0
80 (45)	KTS-R125	JKS-150	JJS-150	2028220-125	KLS-R125	–	A6K-125R	1/0
105 (55)	KTS-R150	JKS-150	JJS-150	2028220-160	KLS-R150	–	A6K-150R	1/0
130 (75)	FWH-220	–	–	2028220-200	L50S-225	–	A50-P225	4/0
160 (90)	FWH-250	–	–	2028220-250	L50S-250	–	A50-P250	250 MCM
3 x 525-600 V								
1.7 (0.75)	KTS-R10	JKS-10	JJS-10	5017906-010	KTN-R10	ATM-R10	A2K-10R	10
2.4 (1.1)	KTS-R10	JKS-10	JJS-10	5017906-010	KTN-R10	ATM-R10	A2K-10R	10
2.7 (1.5)	KTS-R10	JKS-10	JJS-10	5017906-010	KTN-R10	ATM-R10	A2K-10R	10
3.9 (2.2)	KTS-R20	JKS-20	JJS-20	5017906-020	KTN-R20	ATM-R20	A2K-20R	10
4.9 (3)	KTS-R20	JKS-20	JJS-20	5017906-020	KTN-R20	ATM-R20	A2K-20R	10
6.1 (4)	KTS-R20	JKS-20	JJS-20	5017906-020	KTN-R20	ATM-R20	A2K-20R	10
9 (5.5)	KTS-R30	JKS-30	JJS-30	5012406-032	KTN-R30	ATM-R30	A2K-30R	10

Technical data

CUE Output Amps	Fuse type							Maximum conductor cross-section
[Amp (kW)]	Bussmann RK1	Bussmann J	Bussmann T	SIBA RK1	Littel Fuse RK1	Ferraz-Shawmut CC	Ferraz-Shawmut RK1	[AWG]
11 (7.5)	KTS-R30	JKS-30	JJS-30	5012406-032	KTN-R30	ATM-R30	A2K-30R	10
3 x 525-690 V								
–	–	–	–	–	–	–	–	–
–	–	–	–	–	–	–	–	–
–	–	–	–	–	–	–	–	–
–	–	–	–	–	–	–	–	–
–	–	–	–	–	–	–	–	–
–	–	–	–	–	–	–	–	–
–	–	–	–	–	–	–	–	–
–	–	–	–	–	–	–	–	–
–	–	–	–	–	–	–	–	–
–	–	–	–	–	–	–	–	–

CUE Output Amps	Fuse type							Maximum conductor cross-section
[Amps (kW)]	Bussmann E1958 JFHR2	Bussmann E4273 T/JDDZ	Bussmann E4274 H/JDDZ	Bussmann E125085 JFHR2	SIBA E180276 RKI/JDDZ	Littel Fuse E71611 JFHR2	Ferraz-Shawmut E60314 JFHR2	[AWG]
3 x 380-500 V								
190 (110)	FWH-300	JJS-300	NOS-300	170M3017	2028220-315	L50S-300	A50-P300	2 x 2/0
240 (132)	FWH-350	JJS-350	NOS-350	170M3018	2028220-315	L50S-350	A50-P350	2 x 2/0
302 (160)	FWH-400	JJS-400	NOS-400	170M4012	206xx32-400	L50S-400	A50-P400	2 x 350 MCM
361 (200)	FWH-500	JJS-500	NOS-500	170M4014	206xx32-500	L50S-500	A50-P500	2 x 350 MCM
443 (250)	FWH-600	JJS-600	NOS-600	170M4016	206xx32-600	L50S-600	A50-P600	2 x 350 MCM
–	–	–	–	Bussmann E125085 JFHR2	SIBA E180276 JFHR2	–	Ferraz-Shawmut E76491 JFHR2	–
3 x 525-690 V								
155 (110)	–	–	–	170M3017	2061032.315	–	6.6URD30D08A0315	2 x 2/0
192 (132)	–	–	–	170M3018	2061032.350	–	6.6URD30D08A0350	2 x 2/0
242 (160)	–	–	–	170M4011	2061032.350	–	6.6URD30D08A0350	2 x 350 MCM
290 (200)	–	–	–	170M4012	2061032.400	–	6.6URD30D08A0400	2 x 350 MCM
344 (250)	–	–	–	170M4014	2061032.500	–	6.6URD30D08A0500	2 x 350 MCM

Inputs and outputs

Mains supply (L1, L2, L3)

Supply voltage	200-240 V ± 10 %
Supply voltage	380-500 V ± 10 %
Supply voltage	525-600 V ± 10 %
Supply voltage	525-690 V ± 10 %
Supply frequency	50/60 Hz
Maximum temporary imbalance between phases	3 % of rated value
Leakage current to earth	>3.5 mA
Number of cut-ins, enclosure A	max. 2 times/min.
Number of cut-ins, enclosures B and C	max. 1 time/min.
Number of cut-ins, enclosures D	max. 1 time/2 min.

Note: Do not use the supply voltage for switching the CUE on and off.

Motor output (U, V, W)

Output voltage	0-100% [1]
Output frequency	0-100 Hz [2]
Switching on output	not recommended

[1] Output voltage in% of supply voltage.
[2] Depending on the pump family selected.

RS-485 GENIbus connection

Terminal number	68 (A), 69 (B), 61 GND (Y)

The RS-485 circuit is functionally separated from other central circuits and galvanically separated from the supply voltage (PELV).

Digital inputs

Terminal number	18, 19, 32, 33
Voltage level	0-24 VDC
Voltage level, open contact	> 19 VDC
Voltage level, closed contact	< 14 VDC
Maximum voltage on input	28 VDC
Input resistance, R_i	Approx. 4 kΩ

All digital inputs are galvanically separated from the supply voltage (PELV) and other high-voltage terminals.

Signal relays

Relay 01, terminal number	1 (C), 2 (NO), 3 (NC)
Relay 02, terminal number	4 (C), 5 (NO), 6 (NC)
Maximum terminal load (AC-1) [1]	240 VAC, 2 A
Maximum terminal load (AC-15) [1]	240 VAC, 0.2 A
Maximum terminal load (DC-1) [1]	50 VDC, 1 A
Minimum terminal load	24 V DC 10 mA 24 V AC 20 mA

[1] IEC 60947, parts 4 and 5.

C	Common
NO	Normally open
NC	Normally closed

The relay contacts are galvanically separated from other circuits by reinforced insulation (PELV).

Analog inputs

Analog input 1, terminal number	53
Voltage signal	A53 = "U" [1]
Voltage range	0-10 V
Input resistance, R_i	Approx. 10 kΩ
Maximum voltage	± 20 V
Analog input 2, terminal number	54
Current signal	A54 = "I" [1]
Current range	0-20, 4-20 mA
Input resistance, R_i	Approx. 200 Ω
Maximum current	30 mA
Maximum fault, terminals 53, 54	0.5 % of full scale

The factory setting is voltage signal “U”.

All analog inputs are galvanically separated from the supply voltage (PELV) and other high-voltage terminals.

Analog output

Analog output 1, terminal number	42
Current range	0-20 mA
Maximum load to frame	500 Ω
Maximum fault	0.8 % of full scale

The analog output is galvanically separated from the supply voltage (PELV) and other high-voltage terminals.

MCB 114 sensor input module

Analog input 3, terminal number	2
Current range	0/4-20 mA
Input resistance	< 200 Ω
Analog inputs 4, terminal number	4, 5
Analog inputs 5, terminal number	7, 8
Signal type, 2- or 3-wire	Pt100/Pt1000

Note: When using Pt100 with 3-wire cable, the resistance must not exceed 30 Ω.

Accessories

Product numbers

CUE accessories

Add-on module, see page 53	Type	Product number
Sensor input module	MCB 114	96760901
Control panel, see page 54		
Grundfos Local Control Panel	GLCP	96809398
Remote-mounting option for GLCP, with 9.8 ft (3 m) cable	GLCP remote mounting	96801229
Floor-mounting option, see page 55		
Enclosure D1 and D2, option including pedestal parts and instructions	Floor mounting	96801230
Output filters, see page 56		
Sine-wave filters		1)
dU/dt filters		1)

1) Product numbers for sine-wave filters and dU/dt filters, see pages 41 to 44.

Communication modules

Gateways	Type	Product number
LonWorks gateway	CIU 100	96753736
Profibus gateway	CIU 150	96753081
Modbus gateway	CIU 200	96753082
GSM modem	CIU 250	96787106

Sensors

Danfoss pressure sensor	Type	Measuring range [psi] (bar)	Product number
Pressure connection: NPT 1/2”	Kit*	0-120 psi (0-8 bar)	96437852
	6 ft potted cable	0-200 psi (0-14 bar)	91120777
	Kit*	0-87 psi (0-6 bar)	91136169
	Kit*	0-145 psi (0-10 bar)	91136170
	Kit*	0-232 psi (0-16 bar)	91136171
	Kit*	0-362 psi (0-25 bar)	91136172
	Kit*	0-580 psi (0-40 bar)	91136173
	Kit*	0-870 psi (0-60 bar)	91136174
Grundfos differential pressure sensor option, 0.9 m screened cable			
Pressure connection: 7/16” Including fittings for pressure connection (1/4" - 7/16"), brackets for wall and motor mounting, 3 capillary tubes (short/long) and 5 cable clips (black), installation and operating instructions, service kit instructions		0-8.7 psi (0-0.6 bar)	96611522
		0-14.5 psi (0-1.0 bar)	96611523
		0-23 psi (0-1.6 bar)	96611524
		0-36 psi (0-2.5 bar)	96611525
		0-58 psi (0-4.0 bar)	96611526
		0-87 psi (0-6.0 bar)	96611527
		0-145 psi (0-10 bar)	96611550

*** Note:** Kits include a 6 ft cable with removable potted plug in addition to a standard plug for remote mounting. All sensors have a 4-20 mA output.

Other accessories

Dry-running protection 1)	Type	Product number
LiqTec dry-run protector 1 x 115V	LiqTec	96556430
LiqTec dry-run protector 1 x 220V	LiqTec	96556429
LiqTec Extension Cable Kit	LiqTec Ext. Cable	96443676

1) Main pump types CR, CRI, CRN, MTR, SPK, CRK, CHI.
2) Sensor connection: 1/2”.

MCB 114 sensor input module

TM04 0293 0308

Fig. 53 MCB 114 sensor input module

The MCB 114 offers three additional analog inputs for the CUE:

- one analog 0/4-20 mA input for an additional sensor
- two analog Pt100/Pt1000 inputs for temperature sensors.

The three analog inputs are default used for monitoring. For further information, see section MCB 114 sensor input module on page 29.

Scope of delivery

The MCB 114 comes with a terminal cover, an extended frame and an identification label to put onto the CUE.

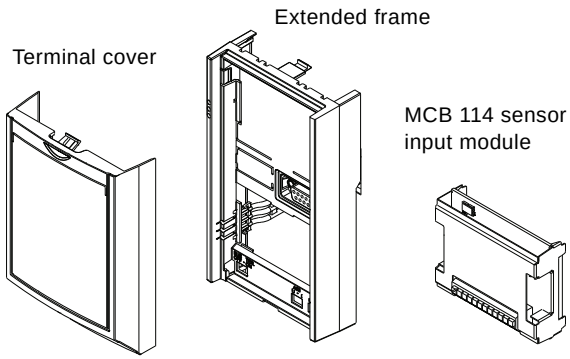

TM04 0026 4807

Fig. 54 Scope of delivery

Technical data

Relative humidity	5-95% RH
Ambient temperature during operation	14 to 131° F (–10 to 55° C)
Temperature during storage and transportation	–13 to 158° F (–25 to 70° C)
Maximum length, signal cable	984 ft (300 m)
Analog input 3	
Terminal number	2
Current range	0/4-20 mA
Input resistance	< 200 Ω
Analog inputs 4 and 5	
Terminal number	4, 5 and 7, 8
Signal type, 2- or 3-wire	Pt100/Pt1000

All analog inputs are galvanically separated from the supply voltage (PELV) and other high-voltage terminals.

Wiring diagram

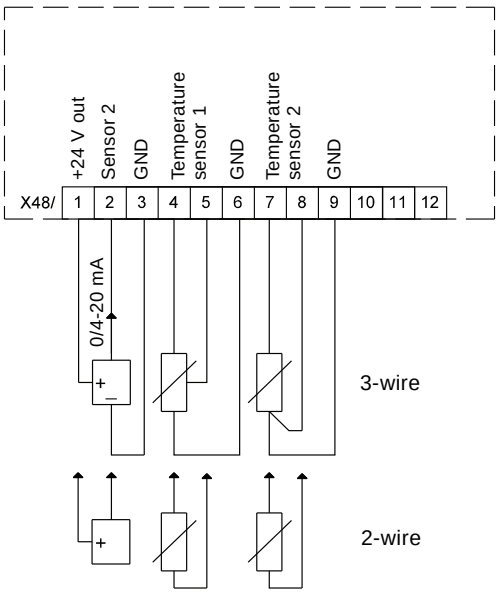

TM03 9483 4007

Fig. 55 Wiring diagram, MCB 114

Terminal	Type	Function
1	+24 V out	Supply to sensor
2	AI 3	Sensor 2, 0/4-20 mA
3	GND	Common frame for analog input
4, 5	AI 4	Temperature sensor 1, Pt100/Pt1000
6	GND	Common frame for temperature sensor 1
7, 8	AI 5	Temperature sensor 2, Pt100/Pt1000
9	GND	Common frame for temperature sensor 2

Terminals 10, 11 and 12 are not used

Grundfos Local Control Panel, GLCP

GLCP is used for local setting of the CUE.

The CUE unit comes default with a GLCP fitted, but the control panel is also available as an option.

Cable is not included in the option.

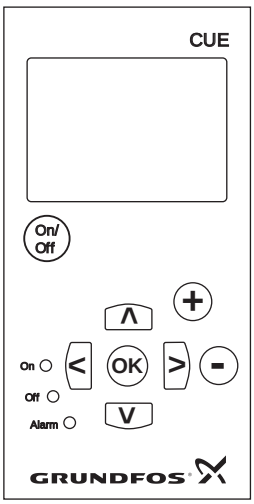

TM03 8719 2507

Fig. 56 Control panel of the CUE

For further information, see the installation and operating instructions of the CUE.

Remote-mounting option for GLCP

By means of a remote-mounting option, the GLCP can also be moved to the front of a cabinet. The enclosure is IP65. The fastening screws must be tightened to a torque of maximum 1 Nm.

The remote-mounting option includes fasteners, 3 m cable and gasket.

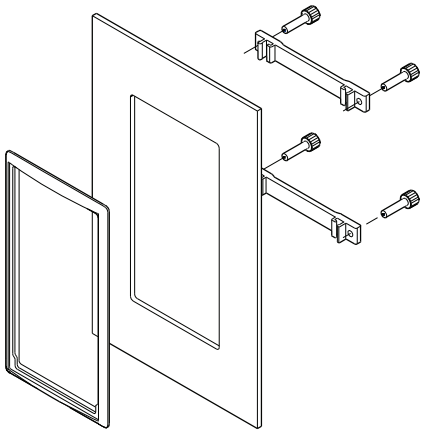

TM04 0376 0608

Fig. 57 Remote-mounting option for GLCP

Dimensions

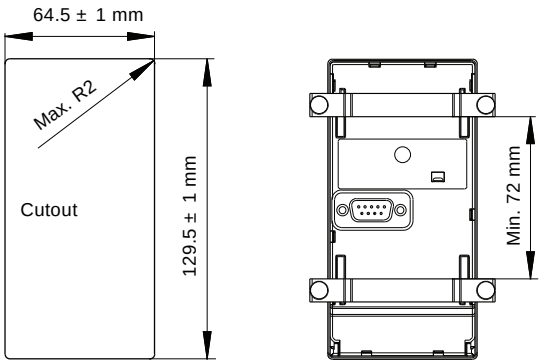

TM04 0377 0608

Fig. 58 Cabinet mounting, dimensions of cutout

For further information, see the installation and operating instructions of the remote-mounting option.

Floor-mounting option

By means of a pedestal, the CUE can also be mounted on the floor. A pedestal has been designed for that purpose.

One pedestal fits both enclosure D1 and D2.

Scope of delivery

- Primary pedestal frame
- Vented front cover
- Two side covers
- Two front brackets
- Hardware for assembly
- Instructions.

Drilling dimensions

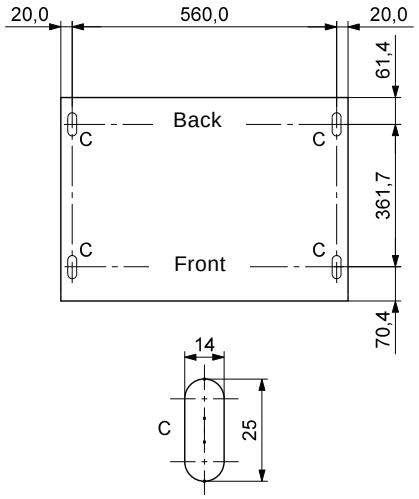

TM03 9923 4607

Fig. 59 Drilling template for pedestal [mm]

TM03 9895 4607

Fig. 60 CUE enclosure D1 or D2 on a pedestal

Please see the instructions of the pedestal option for further information.

IP21/NEMA1 kit

An IP20 enclosure can be upgraded to IP21/NEMA1 with the IP20/NEMA1 kit. The power terminals (mains and motor) will be covered. See fig. 61.

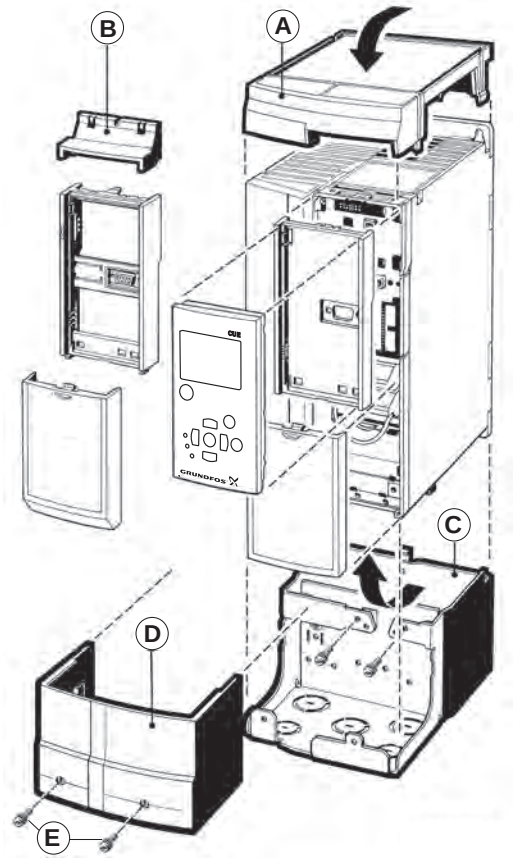

TM04 0372 0608

Fig. 61 Example of IP21/NEMA1 kit for enclosure A3

- A: Top cover
- B: Brim
- C: Base part
- D: Base cover
- E: Screw(s).

If the MCB 114 sensor input module is fitted, the brim (B) must be fitted on the top cover (A).

Output filters

Grundfos offers two types of output filter as accessories for the CUE:

- dU/dt filters
- sine-wave filters.

The filters are in IP20/NEMA1 enclosure.

Fig. 62 Wall-mounted sine-wave filters

Use of output filters

The table below explains in which cases an output filter is required. From the table, it can be seen if a filter is needed and which type to use.

Pump type	Typical shaft power P2	dU/dt filter	Sine-wave filter
SP, BM, BMB with 380 V motor and up	Up to 7.5 kW	–	0-984 ft (0-300 m)
	11 kW and up	0-492 ft (0-150 m)	492-984 ft (150-300 m)
Other pumps, noise reduction	Up to 7.5 kW	–	0-984 ft (0-300 m)
	11 kW and up	0-492 ft (0-150 m)	492-984 ft (150-300 m)
Other pumps, higher noise reduction	Up to 7.5 kW	–	0-984 ft (0-300 m)
	11 kW and up	–	0-984 ft (0-300 m)
Pumps with 690 V motor	All	0-492 ft (0-150 m)	492-984 ft (150-300 m)

The lengths stated apply to the motor cable.

For information about installation, see page 34.

Dimensions and weight of output filters

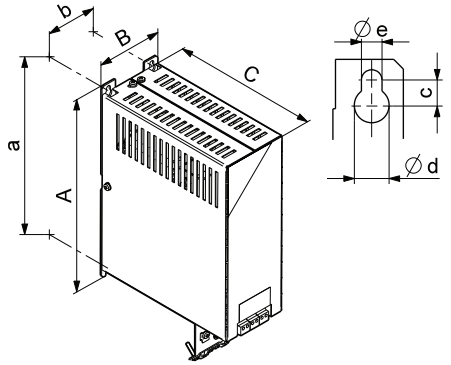

TM04 0625 0908

Fig. 63 Wall mounting

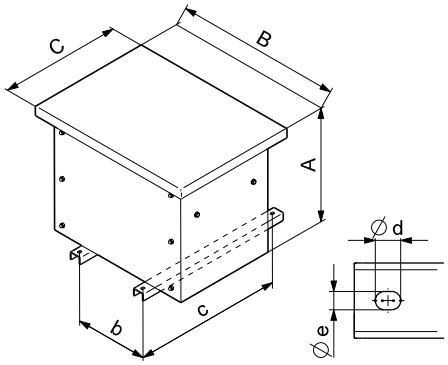

TM04 0624 0908

Fig. 64 Floor mounting

Product number	Mounting	Height [in (mm)]		Width [in (mm)]		Depth [in (mm)]		Screw holes [in (mm)]			Weight [lbs (kg)]
		A	a	B	b	C	c	∅d	∅e	f	
Sine-wave filters											
96754941	Wall	7.87 (200)	7.48 (190)	2.95 (75)	2 36 (60)	8 07 (205)	–	.315 (8)	.177 (4.5)	276 (7)	7 3 (3 3)
96754972	Wall	7.87 (200)	7.48 (190)	2.95 (75)	2 36 (60)	8 07 (205)	–	.315 (8)	.177 (4.5)	276 (7)	9 3 (4 2)
96754973	Wall	10 55 (268)	10.12 (257)	3.54 (90)	2.76 (70)	8.11 (206)	–	.433 (11)	.256 (6 5)	.315 (8)	101.0 (5.8)
96754974	Wall	10 55 (268)	10.12 (257)	3.54 (90)	2.76 (70)	8 07 (205)	–	.433 (11)	.256 (6 5)	.315 (8)	103.9 (7.1)
96754976	Wall	10 55 (268)	10.12 (257)	5.12 (130)	3 54 (90)	8 07 (205)	–	.433 (11)	256 (6 5)	315 (8)	20.1 (9.1)
96754977	Wall	12 99 (330)	12.28 (312)	5.90 (150)	4.72 (120)	10.24 (260)	–	.748 (19)	.354 (9)	.472 (12)	37 3 (16.9)
96754978	Wall	16 93 (430)	16.22 (412)	5.90 (150)	4.72 (120)	10.24 (260)	–	.748 (19)	.354 (9)	.472 (12)	43 9 (19.9)
96755019	Wall	20 87 (530)	19.69 (500)	6.69 (170)	4.92 (125)	10.24 (260)	–	.748 (19)	.354 (9)	.472 (12)	86.0 (39)
96755021	Wall	24 02 (610)	22.83 (580)	6.69 (170)	4.92 (125)	10.24 (260)	–	.748 (19)	.354 (9)	.472 (12)	90.4 (41)
96755032	Wall	24 02 (610)	22.83 (580)	6.69 (170)	5.32 (135)	10.24 (260)	–	.748 (19)	.354 (9)	.472 (12)	119 0 (54)
96755033	Floor	20 55 (522)	–	26.38 (670)	11.42 (290)	19.69 (500)	18.11 (460)	.591 (15)	.433 (11)	–	191 8 (87)
96755034	Floor	30.79 (782)	–	37.01 (940)	15.74 (400)	25.60 (650)	24 02 (610)	.591 (15)	.433 (11)	–	249.1 (113)
96755037	Floor	30.79 (782)	–	37.01 (940)	15.74 (400)	25.60 (650)	24 02 (610)	.591 (15)	.433 (11)	–	418.9 (190)
96755038	Floor	30.79 (782)	–	37.01 (940)	16 93 (430)	25.60 (650)	24 02 (610)	.591 (15)	.433 (11)	–	540.1 (245)
96755039	Floor	29 21 (742)	–	4 39 (1050)	16 93 (430)	29.92 (760)	28 32 (720)	.591 (15)	.433 (11)	–	683.4 (310)
96755040	Wall	16 93 (430)	16.22 (412)	5.90 (150)	4.72 (120)	10.24 (260)	–	.748 (19)	.354 (9)	.472 (12)	36 8 (16.7)
96755041	Floor	20 55 (522)	–	26.38 (670)	8.66 (220)	19.69 (500)	18.11 (460)	.591 (15)	.433 (11)	–	121 3 (55)
96755042	Floor	20 55 (522)	–	26.38 (670)	10 24 (260)	19.69 (500)	18.11 (460)	.591 (15)	.433 (11)	–	154 3 (70)
96755043	Floor	20 55 (522)	–	26.38 (670)	12 20 (310)	19.69 (500)	18.11 (460)	.591 (15)	.433 (11)	–	231.5 (105)
96755044	Floor	20 55 (522)	–	25.20 (640)	14 96 (380)	19.69 (500)	18.11 (460)	.591 (15)	.433 (11)	–	330.7 (150)
96755045	Floor	30.79 (782)	–	35.83 (910)	16 93 (430)	25.60 (650)	24 02 (610)	.591 (15)	.433 (11)	–	485.0 (220)
96755047	Floor	30.79 (782)	–	37.01 (940)	19 69 (500)	25.60 (650)	24 02 (610)	.591 (15)	.433 (11)	–	628.3 (285)
96755049	Floor	43.35 (1152)	–	50.79 (1290)	19 29 (490)	31.50 (800)	29 92 (760)	.591 (15)	.433 (11)	–	815.7 (370)
96755050	Floor	43.35 (1152)	–	50.79 (1290)	21 26 (540)	31.50 (800)	29 92 (760)	–	–	–	1212 5 (550)
dU/dt filters											
96755062	Wall	10 55 (268)	10.12 (257)	4.72 (120)	3 54 (90)	8 07 (205)	–	.433 (11)	256 (6 5)	315 (8)	11.5 (5.2)
96755063	Wall	12 99 (330)	12.28 (312)	6.69 (170)	4.92 (125)	10.24 (260)	–	.748 (19)	.354 (9)	.472 (12)	20.5 (9.3)
96755064	Wall	12 99 (330)	12.28 (312)	6.69 (170)	4.92 (125)	10.24 (260)	–	.748 (19)	.354 (9)	.472 (12)	23 6 (10.7)
96755066	Wall	12 99 (330)	12.28 (312)	6.69 (170)	4.92 (125)	10.24 (260)	–	.748 (19)	.354 (9)	.472 (12)	28 2 (12.8)
96755067	Floor	18.19 (462)	–	24.02 (610)	6.89 (175)	17.32 (440)	15.74 (400)	.591 (15)	.433 (11)	–	72.8 (33)
96755069	Floor	18 23 (463)	–	24.02 (610)	7.48 (190)	17.32 (440)	15.74 (400)	.591 (15)	.433 (11)	–	110 2 (50)
96755070	Floor	22.48 (571)	–	30.31 (770)	7.48 (190)	21.56 (550)	20 08 (510)	.591 (15)	.433 (11)	–	132.3 (60)
96755071	Floor	20 55 (522)	–	26.38 (670)	8.47 (215)	19.69 (500)	18.11 (460)	.591 (15)	.433 (11)	–	127.9 (58)
96755078	Wall	–	11.81 (300)	5.91 (150)	4.72 (120)	10.24 (260)	–	.748 (19)	.354 (9)	.472 (12)	18.3 (8.3)
96755079	Wall	–	12.28 (312)	6.69 (170)	4.92 (125)	10.24 (260)	–	.748 (19)	.354 (9)	.472 (12)	20.7 (9.4)
96755080	Wall	12 99 (330)	12.28 (312)	6.69 (170)	4.92 (125)	10.24 (260)	–	.748 (19)	.354 (9)	.472 (12)	26.01 (11 8)
96755081	Wall	12 99 (330)	12.28 (312)	6.69 (170)	4.92 (125)	10.24 (260)	–	.748 (19)	.354 (9)	.472 (12)	26 9 (12.2)
96755082	Floor	20 55 (522)	–	26.38 (670)	8.47 (215)	19.69 (500)	18.11 (460)	.591 (15	.433 (11)	–	99.2 (45)
96755083	Floor	20 55 (522)	–	25.20 (640)	8.47 (215)	19.69 (500)	18.11 (460)	.591 (15	.433 (11)	–	103.6 (47)
96755084	Floor	20 55 (522)	–	26.38 (670)	8.47 (215)	19.69 (500)	18.11 (460)	.591 (15	.433 (11)	–	103.6 (47)
96755085	Floor	20 55 (522)	–	26.38 (670)	8.47 (215)	19.69 (500)	18.11 (460)	.591 (15	.433 (11)	–	114 6 (52)

Grundfos differential pressure sensor, DPI

Product description

A cable (pos. 1) goes through an M12 x 1.5 pg connection. See fig. 65.

The sensor housing and parts in contact with the medium are made of Inox DIN W.-Nr. 1.4305 (pos. 3) with composite PA top (pos. 2). The pressure connections (pos. 4) are DIN W.-Nr. 1.4305, 7/16” UNF, and gaskets are FKM.

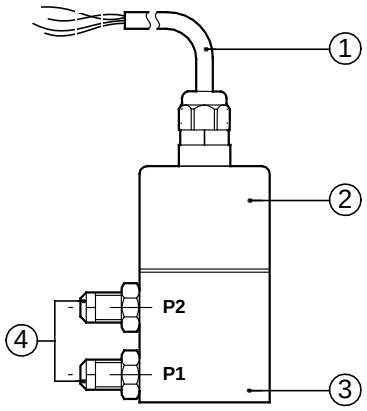

Fig. 65 DPI position numbers

The sensor is supplied with angular bracket for mounting on motor or bracket for wall mounting. See fig. 67.

Options with other cable lengths and various fitting connectors are available.

Dimensions

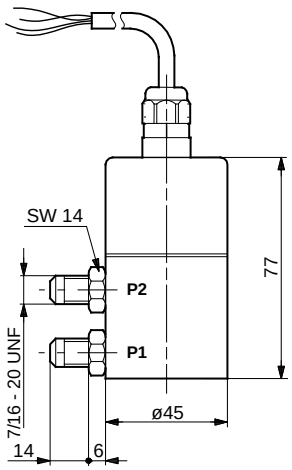

Fig. 66 Dimensions, DPI

Wiring diagram

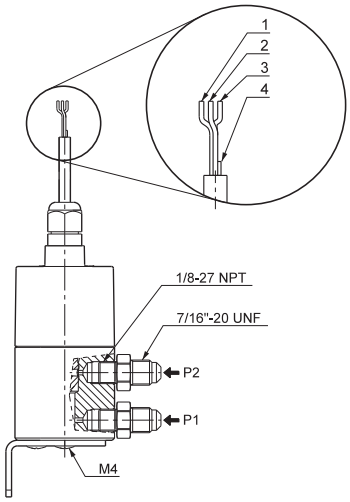

Fig. 67 Wiring diagram, DPI

No	Colour	Function
1	Brown	Supply voltage, 12-30 V
2	Yellow	GND
3	Green	Control signal
4	White	Test signal. Must not be connected to supply voltage (conductor can be cut off)

Technical data

Supply voltage	12-30 VDC
Output signal	4-20 mA
Load [Ω]	24 V: max. 500 [Ω] 16 V: max. 200 [Ω] 12 V: max. 100 [Ω]
Max. system pressure, P1 and P2 simultaneously	232 psi (16 bar)
Rupture pressure [bar]	1.5 x system pressure
Measuring accuracy	2 5% BFSL
Response time	< 0.5 sec
Media temperature range	+14 °F to +158 °F (–10 °C to +70 °C)
Storage temperature range	–40 °F to 176 °F (–40 °C to +80 °C)
Electrical connection	3-wire 0.13 mm^2 2.9 ft (0.9 m) cable M12 x 1.5 in sensor top
Short-circuit proof	Yes
Protected against reverse polarity	Yes
Over supply voltage	Yes
Materials in contact with medium	DIN W.-Nr. 1.4305 FKM and PPS
Enclosure class	IP55
Weight	550 g
EMC (electromagnetic compatibility)	According to EN 61326-1
Emission/immunity	According to EN 61326-1
Connections	7/16”-UNF
Sealing material	FKM

Further product documentation

WebCAPS

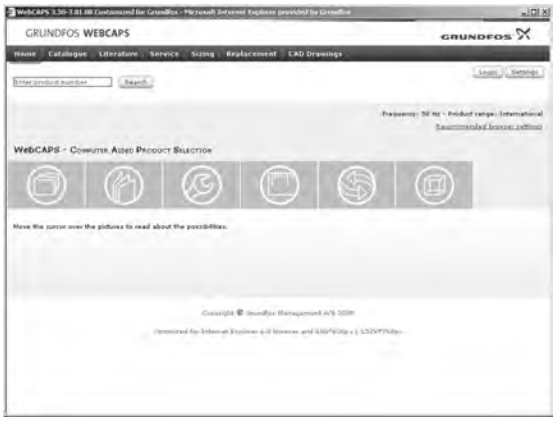

WebCAPS is a **Web**-based **C**omputer **A**ided **P**roduct **S**election program available on www.grundfos.com.

WebCAPS contains detailed information on more than 185,000 Grundfos products in more than 20 languages.

In WebCAPS, all information is divided into 6 sections:

- Catalogue
- Literature
- Service
- Sizing
- Replacement
- CAD drawings.

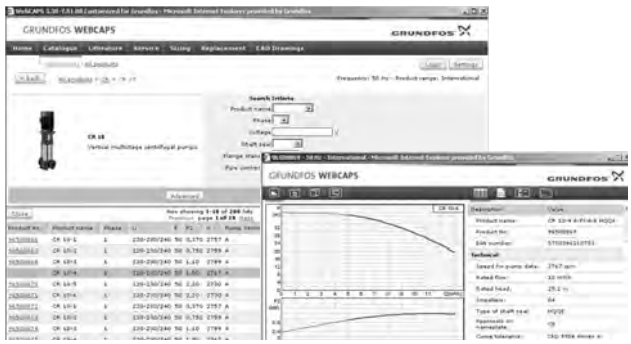

Catalogue

This section is based on fields of applica ion and pump types, and contains
- technical data
- curves (QH, Eta, P1, P2, etc) which can be adapted to the density and viscosity of the pumped liquid and show the number of pumps in operation
- product photos
- dimensional drawings
- wiring diagrams
- quotation texts, etc.

Literature

In this section you can access all the latest documents of a given pump, such as
- data booklets
- installation and operating instructions
- service documentation, such as Service kit catalogue and Service kit instructions
- quick guides
- product brochures, etc.

Service

This section contains an easy-to-use interactive service catalogue. Here you can find and identify service parts of bo h existing and discontinued Grundfos pumps.
Furthermore, this section contains service videos showing you how to replace service parts.

Further product documentation

Sizing

This section is based on different fields of applica ion and installation examples, and gives easy step-by-step instructions in how to
- select the most suitable and efficient pump for your installation
- carry out advanced calculations based on energy consumption, payback periods, load profiles, life cycle costs, etc.
- analyse your selected pump via the built-in life cycle cost tool
- determine the flow velocity in wastewater applications, etc.

Replacement

In this section you find a guide to selecting and comparing replacement data of an installed pump in order to replace the pump with a more efficient Grundfos pump.
The section contains replacement data of a wide range of pumps produced by other manufacturers than Grundfos.

Based on an easy step-by-step guide, you can compare Grundfos pumps with the one you have installed on your site. When you have specified the installed pump, the guide will suggest a number of Grundfos pumps which can improve both comfort and efficiency.

CAD drawings

In this section it is possible to download 2-dimensional (2D) and 3-dimensional (3D) CAD drawings of most Grundfos pumps.

These formats are available in WebCAPS:

2-dimensional drawings:
- .dxf, wireframe drawings
- .dwg, wireframe drawings.

3-dimensional drawings:
- .dwg, wireframe drawings (without surfaces)
- .stp, solid drawings (with surfaces)
- .eprt, E-drawings.

WinCAPS

Fig. 1 WinCAPS CD-ROM

WinCAPS is a **Win**dows-based **C**omputer **A**ided **P**roduct **S**election program containing detailed information on more than 185,000 Grundfos products in more than 20 languages.

The program contains the same features and functions as WebCAPS, but is an ideal solution if no Internet connection is available.

WinCAPS is available on CD-ROM and updated once a year.

BE > THINK > INNOVATE >

Being responsible is our foundation
Thinking ahead makes it possible
Innovation is the essence

L-CUE-PG-01 1009 **US**
Rep. 1108

© 2008, 2009 Grundfos Pumps Corp.

Subject to alterations.

The name Grundfos, the Grundfos logo, and the payoff Be–Think–Innovate are registered trademarks owned by Grundfos Management A/S or Grundfos A/S, Denmark. All rights reserved worldwide.

GRUNDFOS Pumps Corporation
17100 West 118th Terrace
Olathe, Kansas 66061
Phone: +1-913-227-3400
Telefax: +1-913-227-3500

GRUNDFOS Canada Inc.
2941 Brighton Road
Oakville, Ontario L6H 6C9 Canada
Phone: +1-905 829 9533
Telefax: +1-905 829 9512

Bombas GRUNDFOS de Mexico S.A. de C.V.
Boulevard TLC No. 15
Parque Industrial Stiva Aeropuerto
Apodaca, N.L. Mexico 66600
Phone: +52-81-8144 4000
Telefax: +52-81-8144 4010

www.grundfos.com

GRUNDFOS®

MODEL #: 2088G1S22A1B4

Product Data Sheet
November 2016
00813-0100-4690, Rev PD

Rosemount™ 2088 Absolute and Gage Pressure Transmitter

- Performance of 0.065% with high accuracy option
- Lightweight, compact design for cost-effective installation
- Protocols available include 4–20 mA HART® and 1–5 Vdc HART Low Power
- Absolute and gage pressure ranges up to 4,000 psi (276 bar)
- Rangeability of 50:1

Rosemount 2088 Pressure Transmitter product offering

Proven reliability for gage and absolute applications

- Available protocols include 4–20 mA HART and 1–5 Vdc HART Low Power
- Fully configurable LCD display to display process variable, percent of range, and diagnostic messages
- Lightweight, compact design enables easy installation
- Choice of stainless steel or Alloy C-276 wetted materials

Unlock the value of devices with the Emerson™ Smart Wireless THUM™ Adapter

- Gain access to field intelligence and improve quality, safety, availability, operations, and maintenance costs
- Remotely manage devices and monitor health
- Enable new wireless measurement points
- Utilize existing loop power

Proven, reliable, and innovative DP Level technologies

- Connect to virtually any process with a comprehensive offering of process connections, fill fluids, direct mount or capillary connections and materials
- Quantify and optimize total system performance with QZ option

Instrument manifolds – quality, convenient, and easy

- Designed and engineered for optimal performance with Rosemount transmitters
- Save installation time and money with factory assembly
- Offers a variety of styles, materials, and configurations

Contents

Ordering information 3
Specifications 7
Product Certifications 10
Dimensional drawings 15
Options 17

Ordering information

Rosemount 2088 In-line Pressure Transmitter

Configuration	Transmitter output code
4–20 mA HART Rosemount 2088 with Selectable HART	S
1–5 Vdc Low Power Rosemount 2088 with Selectable HART	N

Additional information

Specifications: page 7
Product Certifications: page 10
Dimensional drawings: page 15

Specification and selection of product materials, options, or components must be made by the purchaser of the equipment. See page 9 for more information on material selection.

Table 1. Rosemount 2088 Pressure Transmitter Ordering Information

★ The Standard offering represents the most common options. The starred options (★) should be selected for best delivery. The Expanded offering is manufactured after receipt of order and is subject to additional delivery lead time.

Model	Product description			
2088	Pressure Transmitter			★
Measurement type				
A	Absolute			★
G	Gage			★
Pressure ranges				
	Rosemount 2088G		**Rosemount2088A**	
1	-14.7 to 30 psi (-1,01 to 2,1 bar)		0 to 30 psi (0 to 2,1 bar)	★
2	-14.7 to 150 psi (-1,01 to 10,3 bar)		0 to 150 psi (0 to 10,3 bar)	★
3	-14.7 to 800 psi (-1,01 to 55,2 bar)		0 to 800 psi (0 to 55,2 bar)	★
4	-14.7 to 4,000 psi (-1,01 to 275,8 bar)		0 to 4,000 psi (0 to 275,8 bar)	★
Transmitter output[(1)]				
S	4–20 mA dc/Digital HART Protocol			★
N	1–5 Vdc Low Power/Digital HART Protocol			★
Materials of construction[(2)]				
	Process connection	**Isolating diaphragm**	**Fill fluid**	
22	316L SST	316L SST	Silicone	★
33	Alloy C-276	Alloy C-276	Silicone	★
2B	316L SST	316L SST	Inert	

Table 1. Rosemount 2088 Pressure Transmitter Ordering Information

★ The Standard offering represents the most common options. The starred options (★) should be selected for best delivery.
The Expanded offering is manufactured after receipt of order and is subject to additional delivery lead time.

Process connection		
A	1/2–14 NPT female	★
B[3]	DIN 16288 G 1/2 male	★
D[3][4]	M20 × 1.5 male	★
C[3][4]	RC 1/2 female	
Conduit entry		
1	1/2–14 NPT	★
2[3]	M20 × 1.5	★
4[3][5]	G 1/2	

Options (Include with selected model number)

Extended product warranty		
WR3	3-year limited warranty	★
WR5	5-year limited warranty	★
Diaphragm seal assemblies[6][7]		
S1	Assemble to one Rosemount 1199 Diaphragm Seal	★
Display and interface		
M4	LCD display with local operator interface	★
M5	LCD display, configured for engineering units	★
Configuration buttons		
D4	Analog zero and span	★
DZ	digital zero trim	★
Mounting brackets		
B4	SST mounting bracket with SST bolts	★
Product certifications		
C6	Canada Explosionproof, Intrinsic Safety, Division 2, and Dust-Ignitionproof	★
E2	INMETRO Flameproof	★
E3	China Flameproof	★
E4[3][8]	Japan Flameproof	★
E5	USA Explosionproof (XP) and Dust-Ignitionproof (DIP)	★
E7	IECEx Flameproof	★
ED	ATEX Flameproof	★
EM	Technical Regulations Customs Union (EAC) Flameproof	★
I1[3]	ATEX Intrinsic Safety	★
I2	INMETRO Intrinsic Safety	★

Table 1. Rosemount 2088 Pressure Transmitter Ordering Information

★ The Standard offering represents the most common options. The starred options (★) should be selected for best delivery. The Expanded offering is manufactured after receipt of order and is subject to additional delivery lead time.

I3	China Intrinsic Safety	★
I5	USA Intrinsic Safety (IS) and Nonincendive (NI)	★
I7	IECEx Intrinsic Safety	★
IM	Technical Regulation Customs Union (EAC) Intrinsic Safety	★
K1	ATEX Flameproof, Intrinsic Safety, Type n, Dust	★
K2	INMETRO Flameproof, Intrinsic Safety	★
K5	USA Explosionproof, Dust-Ignitionproof, Intrinsic Safety, and Nonincendive	★
K6[(3)]	Canada Explosion-Proof, Intrinsic Safety, Division 2, Dust-ignitionproof, and ATEX Flameproof, Intrinsic Safety	★
K7	IECEx Flameproof, Intrinsic Safety, Type n, Dust	★
KB	USA Explosionproof, Dust-Ignitionproof, Intrinsic Safety, Nonincendive, and Canada Explosionproof, Dust-Ignitionproof, Intrinsic Safety, Division 2	★
KM	Technical Regulation Customs Union (EAC) Flameproof and Intrinsic Safety	★
KH[(3)]	ATEX Flameproof, Intrinsic Safety, and USA Explosion-Proof, Dust Ignitionproof, Intrinsic Safety, and Nonincendive	★
N1[(3)]	ATEX Type n	★
N3	China Type n	★
N7	IECEx Type n	★
ND[(3)]	ATEX Dust	★
NK	IECEx Dust	★
Shipboard approvals		
SBS	American Bureau of Shipping (ABS) Type Approval	★
SBV	Bureau Veritas (BV) Type Approval	★
SDN	Det Norske Veritas (DNV) Type Approval	★
SLL	Lloyd's Register (LR) Type Approval	★
Pressure testing		
P1	Hydrostatic testing	
Terminal blocks		
T1	Transient protection	★
Special cleaning		
P2	Cleaning for special service	
Calibration certificate		
Q4	Calibration certificate	★
Quality calibration certificate traceability certification		
Q8	Material traceability certification per EN 10204 3.1	★
Q15	Certificate of compliance to NACE® MR0175/ISO 15156 for wetted materials	★
Q25	Certificate of compliance to NACE MR0103 for wetted materials	★

Table 1. Rosemount 2088 Pressure Transmitter Ordering Information

★ The Standard offering represents the most common options. The starred options (★) should be selected for best delivery. The Expanded offering is manufactured after receipt of order and is subject to additional delivery lead time.

Digital signal		
C4[3]	NAMUR alarm and saturation levels, high alarm	★
CN[3]	NAMUR alarm and saturation levels, low alarm	★
C5 [9][10]	Custom alarm and saturation levels, high alarm (requires C9 and Configuration Data Sheet)	★
C7[9][10]	Custom alarm and saturation levels, low alarm (requires C9 and Configuration Data Sheet)	★
C8[10]	Low alarm (Standard Rosemount alarm and saturation levels)	★
Conduit plug[11]		
DO	316 SST conduit plug	★
Configuration		
C9	Software configuration	★
Manifold assemblies[6][7]		
S5	Assemble to Rosemount 306 Integral Manifold	★
Calibration accuracy[12]		
P8	0.065% accuracy to 10:1 turndown	★
Water approval[13]		
DW	NSF drinking water approval	★
Surface finish		
Q16	Surface finish certification for sanitary remote seals	★
Toolkit total system performance reports		
QZ	Remote seal system performance calculation report	★
HART Revision configuration[10]		
HR 5[14]	Configured for HART Revision 5	★
HR7[15]	Configured for HART Revision 7	★
Typical model number: 2088 G 2 S 22 A 1 B4 M5		

1. HART Revision 5 is the default HART output. The Rosemount2088 with selectable HART can be factory or field configured to HART Revision 7. To order HART Revision 7 factory configured, add option code HR7.
2. Materials of construction comply with recommendations per NACE MR0175/ISO 15156 for sour oil field production environments. Environmental limits apply to certain materials. Consult latest standard for details. Selected materials also conform to NACE MR0103 for sour refining environments.
3. Not available with Low Power transmitter output code N.
4. Not available with Alloy C-276, materials of construction code 33.
5. Consists of a $^1/_2$–14 NPT housing with a G$^1/_2$ adapter.
6. Use $^1/_2$–14 NPT female process connection code A.
7. “Assemble-to” items are specified separately and require a completed model number.
8. Only available with conduit thread code 4.
9. Only available with 4–20 mA HART output (output code A).
10. Select configuration buttons (option code D4 or DZ) or local operator interface (option code M4) if local configuration buttons are required.
11. Transmitter shipped with 316SST conduit plug (uninstalled) in place of standard carbon steel conduit plug.
12. Requires transmitter output code S with either materials of construction code 22 or 23.
13. Requires materials of construction code 22 with process connection code A.
14. Configures the HART output to HART Revision 5. The device can be field configured to HART Revision 7 if needed.
15. Configures the HART output to HART Revision 7. The device can be field configured to HART Revision 5 if needed.

Specifications

Performance specifications

For zero-based spans, reference conditions, silicone oil fill, 316L SST isolating diaphragm

Reference accuracy

±0.075% of calibrated span. Includes combined effects of linearity, hysteresis, and repeatability

±0.065% of calibrated span (high accuracy option – P8)

For spans less than 10:1, accuracy = $\pm\left(0.009\left[\frac{URL}{Span}\right]\right)$ % of span

Ambient temperature effect

Expressed as a total effect per 50 °F (28 °C)

Total effect includes zero and span effects

± (0.15% URL + 0.15% of span)

Stability

Ranges 2–4: ±0.10% of URL for 3 years
Range 1: ±0.10% of URL for 1 year

Warranty[1]

All Rosemount 2088 models:

- One-year limited warranty is standard[2]
- Extended three-year and five-year limited warranties available if ordered.[3] (Select option WR3 or WR5 in model string respectively.)

1. Warranty details can be found in Emerson Process Management Terms & Conditions of Sale, document 63445, Rev G (10/6).
2. Goods are warranted for 12 months from the date of initial installation or 18 months from the date of shipment by seller, whichever period expires first.
3. Three-year and five-year warranty period begins on date of shipment by seller.

Vibration effect

Less than ±0.1% of URL when tested per the requirements of IEC60770-1 field or pipeline with high vibration level (10–60 Hz 0.21 mm displacement peak amplitude/60–2000 Hz 3g)

Power supply effect

Less than ±0.005% of calibrated span per volt change in voltage at the transmitter terminals

Electromagnetic compatibility (EMC)

Meets all industrial environment requirements of EN61326 and NAMUR NE-21[1]. Maximum deviation < 1% span during EMC disturbance[2].

1. NAMUR NE-21 does not apply to Low Power (transmitter output option code N).
2. During surge event device may exceed maximum EMC deviation limit or reset; however, device will self-recover and return to normal operation within specified start-up time.

Mounting position effect

Zero shifts to ±2.5 inH_2O (6,22 mbar), which can be zeroed
Span: no effect

Transient protection

Tested in accordance with IEEE C62.41.2-2002, Location Category B

6 kV crest (0.5 µs – 100 kHz)
3 kA crest (8 × 20 microseconds)
6 kV crest (1.2 × 50 microseconds)

General specifications

Tested to IEC 801-3

Functional specifications

Table 2. Rosemount 2088 Range Values

Range	Minimum span	Upper (URL)	Lower (LRL)	Lower[1] (LRL)(gage)
1	0.60 psi (41,37 mbar)	30.00 psi (2,07 bar)	0 psia (0 bar)	–14.70 psig (–1,01 bar)
2	3.00 psi (206,85 mbar)	150.00 psi (10,34 bar)	0 psia (0 bar)	–14.70 psig (–1,01 bar)
3	16.00 psi (1,11 bar)	800.00 psi (55,16 bar)	0 psia (0 bar)	–14.70 psig (–1,01 bar)
4	80.00 psi (5,52 bar)	4000.00 psi (275,79 bar)	0 psia (0 bar)	–14.70 psig (–1,01 bar)

1. Assumes atmospheric pressure of 14.70 psia (1,01 bar-a).

Output

Code S: 4–20 mA
Code N: 1–5 Vdc, Low Power
Outputs are directly proportional to the input pressure

Selectable HART

Digital communications based on HART Revision 5 (default) or Revision 7 (option code HR7) protocol can be selected. The HART revision can be switched in the field using any HART based configuration tool or the optional local operator interface (LOI).

Service

Liquid, gas, and vapor applications

Power supply

External power supply required. Transmitter operates on 10.5–42.4 Vdc with no load (5.8-28 V for Low Power). Reverse polarity protection is standard.

Load limitations

Reverse polarity protection is standard. Maximum loop resistance is determined by the power supply voltage as described by the following equations:

Figure 1. Maximum Loop Resistance

Maximum loop resistance = 43.5 (Power supply voltage – 10.5)

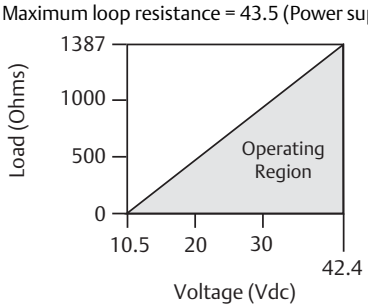

The Field Communicator requires a minimum loop resistance of 250 Ω for communication.

Indication

Optional two-line LOI/LCD display

Zero and span adjustment requirements

Zero and span values can be set anywhere within the range limits stated in Table 2. Span must be greater than or equal to the minimum span stated in Table 2.

LOI

The LOI utilizes a two-button menu with internal and external configuration buttons. Internal buttons are always configured for LOI. External buttons can be configured for either LOI, (option code M4), analog zero and span (option code D4) or digital zero trim (option code DZ) for LOI configuration menu.

Current draw

Output code N: ≤ 3 mA

Overpressure limits

Range 1: 120 psig max
All other ranges: two times the URL

Burst pressure

11,000 psi for all ranges

Zero elevation and suppression

Zero can be suppressed between atmosphere for gage transmitters or 0 psia for absolute transmitters and upper range limit, provided the calibrated span is equal to or greater than the minimum span, and the upper range value does not exceed the upper range limit.

Dynamic performance

Total response time: 145 milliseconds
Update rate: 22 times per second minimum

Temperature limits

Ambient

–40 to 185 °F (–40 to 85 °C)
With LCD display[1]: –40 to 176 °F (–40 to 80 °C)

Storage[2]

–50 to 230 °F (–46 to 110 °C)
With LCD display: –40 to 185 °F (–40 to 85 °C)

1. For the output code N, LCD display may not be readable and LCD display updates will be slower at temperatures below –22 °F (–30 °C).
2. If storage temperature is above 85 °C, perform a sensor trim prior to installation.

Process[1][2]

Silicone fill sensor: –40 to 250 °F (–40 to 121 °C)
Inert fill sensor: –22 to 250 °F (–30 to 121 °C)

1. 220 °F (104 °C) limit in vacuum service; 130 °F (54 °C) for pressures below 0.5 psia.
2. Process temperatures above 185 °F (85 °C) require derating the ambient limits by a 1.5:1 ratio. For example, for process temperature of 195 °F (91 °C), new ambient temperature limit is equal to 170 °F (77 °C). This can be determined as follows: (195 °F – 185 °F) × 1.5 = 15 °F,
185 °F – 15 °F = 170 °F

Humidity limits

0–100% relative humidity

Volumetric displacement

Less than 0.0005 in^3 (0,008 cm^3)

Damping

Analog output response time to a step change is user-selectable from 0 to 60 seconds for one time constant. Software damping is in addition to sensor module response time.

Turn-on time

2.0 seconds, no warm-up required

Transmitter security

Activating the transmitter security function prevents changes to the transmitter configuration, including local zero and span adjustments. Security is activated by an internal switch.

Failure mode alarm

If self-diagnostics detect a sensor or microprocessor failure, the analog signal will be driven either high or low to alert the user. High or low failure mode is user-selectable with a jumper on the transmitter. The values to which the transmitter drives its output in failure mode depend on whether it is factory-configured to standard or NAMUR-compliant operation. The values for each are as follows:

Table 3. Standard Operation

Output code	Linear output	Fail high	Fail low
S	3.9 ≤ I ≤ 20.8	I ≥ 21.75 mA	I ≤ 3.75 mA
N	0.97 ≤ V ≤ 5.2	V ≥ 5.4 V	V ≤ 0.95 V

Table 4. NAMUR-Compliant Operation

Output code	Linear output	Fail high	Fail low
S	3.8 ≤ I ≤ 20.5	I ≥ 22.5 mA	I ≤ 3.6 mA

Physical specifications

Material selection

Emerson Process Management provides a variety of Rosemount product with various product options and configurations including materials of construction that can be expected to perform well in a wide range of applications. The Rosemount product information presented is intended as a guide for the purchaser to make an appropriate selection for the application. It is the purchaser's sole responsibility to make a careful analysis of all process parameters (such as all chemical components, temperature, pressure, flow rate, abrasives, contaminants, etc.), when specifying product, materials, options and components for the particular application. Emerson is not in a position to evaluate or guarantee the compatibility of the process fluid or other process parameters with the product, options, configuration or materials of construction selected.

Electrical connections

1/2–14 NPT, M20 × 1.5 (CM20), or G 1/2 female (PF 1/2 female) conduit entry

Process connections

1/2–14 NPT female, DIN 16288 G 1/2 male, RC 1/2 female (PT 1/2 female), M20 × 1.5 (CM20) male

Process-wetted parts

Isolating diaphragm

316L SST (UNS S31603), Alloy C-276 (UNS N10276)

Process connector

316L stainless steel CF-3M (Cast version of 316L SST, material per ASTM_A743) or Alloy C-276

Non-wetted parts

Electronics housing

Low-copper aluminum
Enclosures meet NEMA® Type 4X, IP66, and IP68 when properly installed

Paint for aluminum housing

Polyurethane

Cover O-rings

Buna-N

Fill fluid

Silicone or inert fill

Weight

Output code S and N: approximately 2.44 lb (1, 11 kg)

Product Certifications

Rev 1.9

European Directive Information

A copy of the EU Declaration of Conformity can be found at the end of the Quick Start Guide. The most recent revision of the EU Declaration of Conformity can be found at Emerson.com/Rosemount.

Ordinary Location Certification

As standard, the transmitter has been examined and tested to determine that the design meets the basic electrical, mechanical, and fire protection requirements by a nationally recognized test laboratory (NRTL) as accredited by the Federal Occupational Safety and Health Administration (OSHA).

North America

E5 USA Explosionproof (XP) and Dust-Ignitionproof (DIP)
Certificate: 1V2A8.AE
Standards: FM Class 3600 – 2011, FM, Class 3615 – 2006, FM class 3616 – 2011, FM Class 3810 – 2005, ANSI/NEMA 250 – 1991
Markings: XP CL I, DIV 1, GP B, C, D; DIP CL II, DIV 1, GP E, F, G; CL III; T5(–40 °C ≤ T_a ≤ +85 °C); Factory Sealed; Type 4X

I5 USA Safety (IS) and Nonincendive (NI)
Certificate: 0V9A7.AX
Standards: FM Class 3600 – 1998, FM Class 3610 – 2010, FM Class 3611 – 2004, FM Class 3810 – 1989
Markings: IS CL I, DIV 1, GP A, B, C, D; CL II, DIV 1, GP E, F, G; Class III; DIV 1 when connected per Rosemount drawing 02088-1018; NI CL 1, DIV 2, GP A, B, C, D; T4(–40 °C ≤ T_a ≤ +70 °C); Type 4x

Special Condition for Safe Use (X):

1. The Rosemount 2088 Transmitter with the transient terminal block (Option code T1) will not pass the 500 Vrms dielectric strength test and this must be taken into account during installation.

C6 Canada Explosionproof, Intrinsic Safety and Division 2, Dust-Ignitionproof
Certificate: 1015441
Standards: CAN/CSA C22.2 No. 0-M91 (R2001), CSA Std C22.2 No. 25-1966, CSA Std C22.2 No. 30-M1986, CAN/CSA-C22.2 No. 94-M91, CSA Std C22.2 No. 142-M1987, CAN/CSA-C22.2 No. 157-92, CSA Std C22.2 No. 213-M1987, ANSI-ISA-12.27.01-2003
Markings: Explosionproof for Class I, Division 1, Groups B,C and D; Dust-Ignitionproof Class II, Division 1, Groups E, F, G; Class III Division 1; Intrinsically Safe Class I, Division 1 Groups A, B, C, D when connected in accordance with Rosemount drawing 02088-1024, Temperature Code T3C; Class I Division 2 Groups A, B, C and D; Type 4X; Factory Sealed; Single Seal

Europe

ED ATEX Flameproof
Certificate: KEMA97ATEX2378X
Standards: EN60079-0:2012 + A11:2013, EN60079-1:2014, EN60079-26:2015
Markings: Ex II 1/2 G Ex db IIC T6....T4, Ga/Gb, T6(–60 °C ≤ T_a ≤ +70 °C), T4/T5(–60 °C ≤ T_a ≤ +80 °C)

Special Conditions for Safe Use (X):

1. This device contains a thin wall diaphragm. Installation, maintenance and use shall take into account the environmental conditions to which the diaphragm will be subjected. The manufacturer's instructions for installation and maintenance shall be followed in detail to assure safety during its expected lifetime.
2. Flameproof joints are not intended for repair.
3. Non-standard paint options may cause risk from electrostatic discharge. Avoid installations that could cause electrostatic build-up on painted surfaces, and only clean the painted surfaces with a damp cloth. If paint is ordered through a special option code, contact the manufacturer for more information.

I1 ATEX Intrinsic Safety
Certificate: BAS00ATEX1166X
Standards: EN60079-0:2012, EN60079-11:2012
Markings: Ex II 1 G Ex ia IIC T4 Ga (–55 °C ≤ T_a ≤ +70 °C)

Table 5. Input Parameters

Parameter	HART
Voltage U_i	30 V
Current I_i	200 mA
Power P_i	0.9 W
Capacitance C_i	0.012 µF

Special Condition for Safe Use (X):

1. The apparatus is not capable of withstanding the 500 V insulation test required by EN60079-11. This must be taken into account when installing the apparatus.

N1 ATEX Type n
Certificate: BAS00ATEX3167X
Standards: EN60079-0:2012, EN60079-15:2010
Markings: Ex II 3 G Ex nA IIC T5 Gc (–40 °C ≤ T_a ≤ +70 °C)

Special Condition for Safe Use (X):

1. The apparatus is not capable of withstanding the 500 V insulation test required by EN60079-15. This must be taken into account when installing the apparatus.

ND ATEX Dust
Certificate: BAS01ATEX1427X
Standards: EN60079-0:2012, EN60079-31:2009
Markings: Ⓔx II 1 D Ex t IIIC T50 °C T_{500} 60 °C Da

Special Conditions for Safe Use (X):

1. The user must ensure the maximum rated voltage and current (36 volts, 24 milliamps, d.c.) are not exceeded. All connection to other apparatus or associated apparatus shall have control over this voltage and current to a category 'ib' circuit.
2. Cable entries must be used which maintain the ingress protection of the enclosure to at least IP66.
3. Unused cable entries must be filled with suitable blanking plugs which maintain the ingress protection of the enclosure to at least IP66.
4. Cable entries and blanking plugs must be suitable for the ambient range of the apparatus and capable of withstanding a 7 J impact test.
5. The Rosemount 2088/2090 sensor module must be securely screwed in place to maintain the ingress protection of the enclosure.

International

E7 IECEx Flameproof
Certificate: IECEx KEM 06.0021X
Standards: IEC 60079-0:2011, IEC60079-1:2014, IEC60079-26:2014
Markings: Ex d IIC T6...T4 Ga/Gb, T6(–60 °C ≤ T_a ≤ +70 °C), T4/T5 (–60 °C ≤ T_a ≤ +80 °C)

Special Condition for Safe Use (x):

1. This device contains a thin wall diaphragm. Installation, maintenance and use shall take into account the environmental conditions to which the diaphragm will be subjected. The manufacturer's instructions for installation and maintenance shall be followed in detail to assure safety during its expected lifetime.
2. Flameproof joints are not intended for repair.
3. Non-standard paint options may cause risk from electrostatic discharge. Avoid installations that could cause electrostatic build-up on painted surfaces, and only clean the painted surfaces with a damp cloth. If paint is ordered through a special option code, contact the manufacturer for more information.

I7 IECEx Intrinsic Safety
Certificate: IECEx BAS 12.0071X
Standards: IEC60079-0:2011, IEC60079-11:2011
Markings: Ex ia IIC T4 Ga (–55 °C ≤ T_a ≤ +70 °C)

Table 6. Entity Parameters

Parameter	HART
Voltage U_i	30 V
Current I_i	200 mA
Power P_i	0.9 W
Capacitance C_i	0.012 µF

Special Conditions for Safe Use (X):

1. When fitted with a transient suppression terminal block, the Rosemount 2088 is incapable of passing the 500 V isolation test. This must be taken into account during installation.
2. The enclosure may be made of aluminum alloy and given a protective polyurethane paint finish; however, care should be taken to protect it from impact or abrasion if located in a Zone 0 environment.

N7 IECEx Type n
Certificate: IECEx BAS 12.0072X
Standards: IEC60079-0:2011, IEC60079-15:2010
Markings: Ex nA IIC T5 Gc (–40 °C ≤ T_a ≤ +70 °C)

Special Condition for Safe Use (X):

1. When fitted with a transient suppression terminal block, the Rosemount 2088 is incapable of passing the 500 V isolation test. This must be taking into account during installation.

NK IECEx Dust
Certificate: IECEx BAS12.0073X
Standards: IEC60079-0:2011, IEC60079-31:2008
Markings: Ex t IIIC T50 °C T_{500} 60 °C Da

Table 7. Input Parameters

Parameter	HART
Voltage U_i	36 V
Current I_i	24 mA

Special Conditions For Safe Use (x):

1. Cable entries must be used which maintain the ingress protection of the enclosure to at least IP66.
2. Unused cable entries must be filled with suitable blanking plugs which maintain the ingress protection of the enclosure to at least IP66.
3. Cable entries and blanking plugs must be suitable for the ambient range of the apparatus and capable of withstanding a 7 J impact.

Brazil

E2 INMETRO Flameproof
Certificate: UL-BR 15.0728X
Standards: ABNT NBR IEC60079-0:2008 + Errata 1:2011, ABNT NBR IEC 60079-1:2009 + Errata 1:2011
Markings: Ex d IIC T* Gb, *T4(–20 °C ≤ T_a ≤ +80 °C), *T6(–20 °C ≤ T_a ≤ +40 °C)

Special Conditions For Safe Use (x):

1. The material of the diaphragm shall not be subject to environmental conditions that might adversely affect the partition wall.
2. The pressure transducers are not intended to be physically connected to a separate external source of heating or cooling that could influence on its ambient temperature rating.
3. For ambient temperature above +60 °C, use field wiring rated to at least +90 °C.
4. The cable glands, thread adapters or plugs to be used on the equipment shall be INMETRO certified.

I2 INMETRO Intrinsic Safety
Certificate: UL-BR 13.0246X
Standards: ABNT NBR IEC60079-0:2008 + Errata 1:2011, ABNT NBR IEC60079-11:2009
Markings: Ex ia IIC T4 Ga (–55 °C ≤ T_a ≤ +70 °C)

Table 8. Input Parameters

Parameter	HART
Voltage U_i	30 V
Current I_i	200 mA
Power P_i	0.9 W
Capacitance C_i	0.012 µF

Special Conditions for Safe Use (X):

1. When fitted with a transient suppression terminal block, the Rosemount 2088 is incapable of passing the 500 V isolation test. This must be taken into account when installing the equipment.
2. The enclosure may be made of aluminum alloy and given a protective polyurethane paint finish; however, care should be taken to protect it from impact or abrasion if located in Zone 0.

China

E3 China Flameproof
Certificate: GYJ15.1505
Standards: GB3836.1-2010, GB3836.2-2010
Markings: Ex d IIC T4/T6 Gb, T6(–20 °C ≤ T_a ≤ +40 °C), T4(–20 °C ≤ T_a ≤ +80 °C)

Special Conditions For Safe Use (X):

1. The ambient temperature is as follows:

T_a	Temperature class
–20 °C ≤ T_a ≤ 80 °C	T4
–20 °C≤ T_a ≤ 40 °C	T6

2. The earth connection facility in the enclosure should be connected reliably.
3. During installation in hazardous location, cable glands, conduits, and blanking plugs, certified by state-appointed inspection bodies with Ex d IIC type of protection, should be used.
4. During installation, use and maintenance in explosive gas atmospheres, observe the warning “Do not open when energized.”
5. During installation, there should be no mixture harm to flameproof housing.
6. End user is not permitted to change any components insides, but to settle the problem in conjunction with manufacturer to avoid damage to the product.
7. Maintenance should be done in non-hazardous location.
8. During installation, use and maintenance of this product, observe the following standards: GB3836.13-2013, GB3836.15-2000, GB3836.16-2006, GB50257-2014.

I3 China Intrinsic Safety
Certificate: GYJ15.1507
Standards: GB3836.1-2010, GB3836.4-2010, GB3836.20-2010
Markings: Ex ia IIC T4/T5 Ga

Special Conditions for Safe Use (X):

1. The enclosure may be made of aluminum alloy and given a protective polyurethane paint finish; however, care should be taken to protect it from impact or abrasion if located in a zone 0 environment.
2. This apparatus is not capable of withstanding the 500 V r.m.s. insulation test required by Clause 6.3.12 of GB3836.4-2010.
3. The ambient temperature is:

T_a	Temperature class
–55 °C≤ T_a ≤ 70 °C	T4

4. Intrinsically safe parameters:

Parameter	HART
Voltage U_i	30 V
Current I_i	200 mA
Power P_i	0.9 W
Capacitance C_i	0.012 µF
Inductance L_i	0 mH

5. The product should be used with Ex-certified linear associated apparatus to establish explosion protection system that can be used in explosive gas atmospheres. Wiring and terminals should comply with the instruction manual of the product and associated apparatus.
6. The cables between this product and associated apparatus should be shielded cables (the cables must have insulated shields). The shield has to be grounded reliably in a non-hazardous area.
7. End users are not permitted to change any internal components, but to settle the problem in conjunction with the manufacturer to avoid damage to the product.
8. During installation, use and maintenance of this product, observe the following standards: GB3836.13-2013, GB3836.15-2000, GB3836.16-2006, GB3836.18-2010, GB50257-2014

N3 China Type n
Certificate: GYJ15.1108X
Standards: GB3836.1-2000, GB3836. 8-2003
Markings: Ex nA nL IIC T5 Gc (–40 °C ≤ T_a ≤ +70 °C)

Special Conditions For Safe Use (X):

1. The apparatus is not capable of withstanding the 500 V r.m.s. insulation test required by GB3836.8-2003.
2. The ambient temperature range is –40 °C ≤ T_a ≤ +70 °C.
3. Maximum input voltage: 50 V.
4. Cable glands, conduit or blanking plugs, certified by NEPSI with Ex e or Ex n protection types should be used on external connections and redundant cable entries.
5. Maintenance should be done in non-hazardous location.
6. End users are not permitted to change any internal components, but to settle the problem in conjunction with manufacturer to avoid damage to the product.
7. During installation, use and maintenance of this product, observe the following standards: GB3836.13-2013, GB3836.15-2000, GB3836.16-2006, GB50257-1996.

Japan

E4 Japan Flameproof
Certificate: TC20869, TC20870
Markings: Ex d IIC T5

Technical Regulations Customs Union (EAC)

EM EAC Flameproof
Certificate: RU C-US.GB05.B.01197
Markings: Ga/Gb Ex d IIC T4/T6 X, T4(–40 °C ≤ T_a ≤ +80 °C), T6(–40 °C ≤ T_a ≤ +40 °C)

Special Condition for Safe Use (X):

1. See certificate for special conditions.

IM EAC Intrinsically Safe
Certificate: RU C-US.GB05.B.01197
Markings: 0Ex ia IIC T4 Ga X (–55 °C ≤ T_a ≤ +70 °C)

Special Condition for Safe Use (X):

1. See certificate for special conditions.

Combinations

K1 Combination of ED, I1, ND and N1
K2 Combination of E2 and I2
K5 Combination of E5 and I5
K6 Combination of C6, ED and I1
K7 Combination of E7, I7, NK and N7
KB Combination of K5 and C6
KM Combination of EM and IM
KH Combination of ED, I1, K5

Conduit Plugs and Adapters

IECEx Flameproof and Increased Safety
Certificate: IECEx FMG 13.0032X
Standards: IEC60079-0:2011, IEC60079-1:2007-04, IEC60079-7:2006-07
Markings: Ex de IIC Gb

ATEX Flameproof and Increased Safety
Certificate: FM13ATEX0076X
Standards: EN60079-0:2012, EN60079-1:2007, IEC60079-7:2007
Markings: Ex II 2 G Ex de IIC Gb

Table 9. Conduit Plug Thread Sizes

Thread	Identification mark
M20 × 1.5 – 6g	M20
1/2–14 NPT	1/2 NPT
G1/2A	G1/2

Table 10. Thread Adapter Thread Sizes

Male thread	Identification mark
M20 × 1.5 – 6H	M20
1/2–14 NPT	1/2–14 NPT
3/4–14 NPT	3/4–14 NPT
Female thread	**Identification mark**
M20 × 1.5 – 6H	M20
1/2–14 NPT	1/2–14 NPT
PG 13.5	PG 13.5
G1/2	G1/2

Special Conditions For Safe Use (X):

1. When the thread adapter or blanking plug is used with an enclosure in type of protection increased safety “e” the entry thread shall be suitably sealed in order to maintain the ingress protection rating (IP) of the enclosure.
2. The blanking plug shall not be used with an adapter.
3. Blanking Plug and Threaded Adapter shall be either NPT or Metric thread forms. G1/2 thread forms are only acceptable for existing (legacy) equipment installations.

Additional Certifications

SBS American Bureau of Shipping (ABS) Type Approval
Certificate: 09-HS446883D-3-PDA
Intended Use: Measure gauge or absolute pressure of liquid, gas or vapor applications on ABS classed vessels, marine, and offshore installations.
ABS Rules: 2014 Steel Vessels Rules 1-1-4/7.7, 1-1-Appendix 3, 4-8-3/1.7, 4-8-3/13.1, 4-8-3/13.3.1 & 13.3.2, 4-8-4/27.5.1

SBV Bureau Veritas (BV) Type Approval
Certificate: 23156/B0 BV
Requirements: Bureau Veritas Rules for the Classification of Steel Ships
Application: Class notations: AUT-UMS, AUT-CCS, AUT-PORT and AUT-IMS; Pressure transmitter type 2088 cannot be installed on diesel engines

SDN Det Norske Veritas (DNV) Type Approval
Certificate: TAA000004F
Intended Use: DNV GL Rules for Classification - Ships and offshore units
Application:

Location classes	
Temperature	D
Humidity	B
Vibration	A
EMC	B
Enclosure	D

SLL Lloyds Register (LR) Type Approval
Certificate: 11/60002
Application: Environmental categories ENV1, ENV2, ENV3 and ENV5

Dimensional drawings

Figure 2. Rosemount 2088 with Optional Digital Display

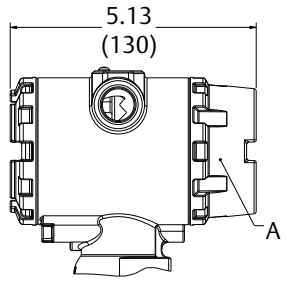

A. Digital display cover
B. 2 1/2–14 NPT conduit connection

Figure 3. Rosemount 2088 Process Connection

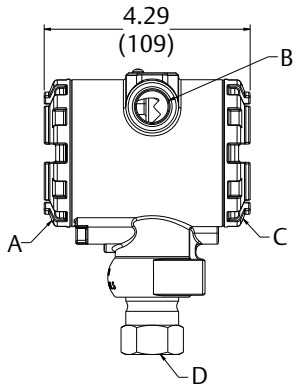

A. Field terminals
B. Conduit connection
C. Transmitter electronics
D. 1/2–14 NPT female connection[1]

1. RC 1/2 female (PT 1/2 female), and M20 female also available as options.

Figure 4. Rosemount 2088 Nameplate and Labels

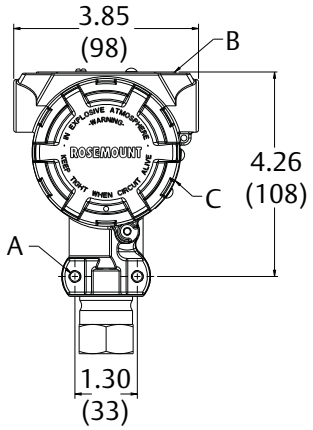

A. Bracket mounting holes (1/4–20 UNC)
B. Nameplate
C. Certification label (located on side)

Figure 5. Rosemount 2088 with Optional Pipe Mounting Bracket

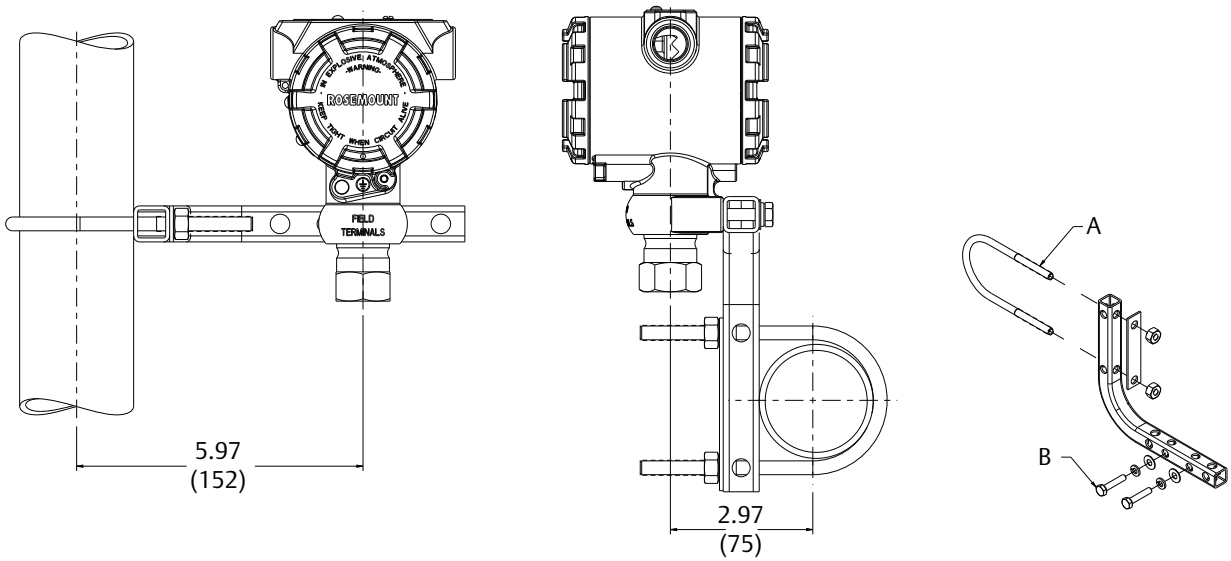

A. 2-in. U-bolt for pipe mounting (clamp shown)
B. $^1/_4 \times 1^1/_4$ bolts for transmitter mounting
Dimensions are in inches (millimeters).

Figure 6. Rosemount 2088 with Optional Panel Mounting Bracket

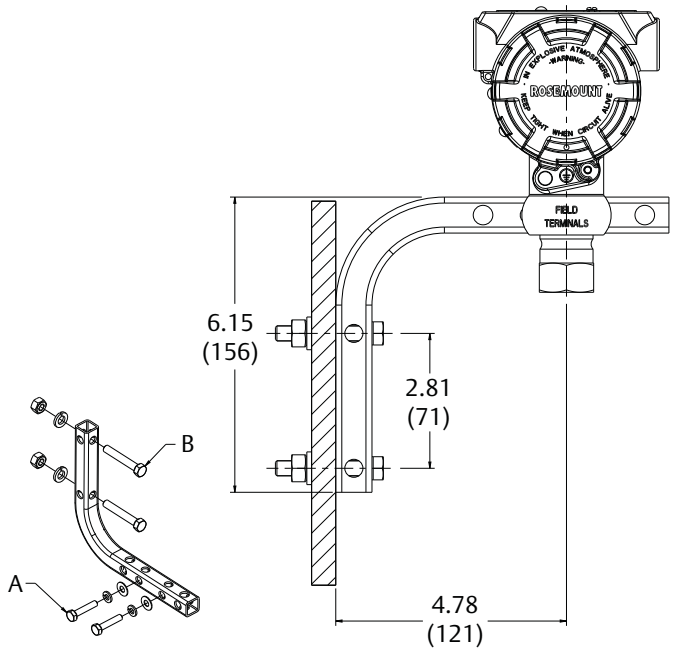

A. $^1/_4 \times 1^1/_4$ bolts for transmitter mounting
B. $^5/_{16} \times 1^1/_2$ bolts for panel mounting (not supplied)
Dimensions are in inches (millimeters).

Options

Standard configuration

Unless otherwise specified, transmitter is shipped as follows:

Engineering units	psi (all ranges)
4 mA (1 Vdc)	0 (engineering units)
20 mA (5 Vdc)	Upper range limit
Output	Linear
Flange type	Specified model code option
Flange material	Specified model code option
O-ring material	Specified model code option
Drain/vent	Specified model code option
LCD display	Installed or none
Alarm	High
Software tag	Blank

Custom configuration

If option code C9 is ordered, the customer may specify the following data in addition to the standard configuration parameters.

- Output information
- Transmitter information
- LCD display configuration
- Hardware selectable information
- Signal selection

Refer to the Rosemount 2088 Configuration Data Sheet.

Tagging (3 options available)

- Standard SST hardware tag is permanently affixed on transmitter.
- Tag character height is 0.125-in. (3,18 mm), 84 characters maximum.
- Tag may be wired to the transmitter nameplate upon request, 85 characters maximum.
- For HART protocols, the tag may be stored in transmitter memory (eight characters maximum).
- Software tag is left blank unless specified.
- HART Revision 5: 8 characters
- HART Revision 7: 32 characters

Optional Rosemount 306 Integral Manifold

Factory-assembled to Rosemount 2088 Transmitters. Refer to Rosemount Manifolds Product Data Sheet for additional information.

Other seals

Refer to Rosemount DP Level Transmitters and 1199 Diaphragm Seal System Product Data Sheet for additional information.

Output information

Output range points must be the same unit of measure. Available units of measure include:

Pressure units[1]		
torr	psf[1]	cmH_2O @ 4 °C[1]
atm	inH_2O	mH_2O @ 4 °C[1]
Pa	inH_2O @ 4 °C[1]	inHg
kPa	inH_2O @ 60 °F[1]	mmHg
MPa[1]	ftH_2O	cmHg @ 0 °C[1]
hPa[1]	ftH_2O @ 4 °C[1]	mHg @ 0 °C[1]
mbar	ftH_2O @ 60 °F[1]	g/cm^2
bar	mmH_2O	kg/m^2[1]
psi	mmH_2O @ 4 °C[1]	kg/cm^2

1. Field configurable only, not available for factory calibration or custom configuration (option code C9 “Software configuration”).

Display and interface options

M4 Digital display with local operator interface (LOI)

- Available for 4–20 mA HART, 4–20 mA HART Low Power

M5 Digital meter

- Two-line, five-digit LCD display for 4–20 mA HART
- Two-line, five-digit LCD display for 1–5 Vdc HART Low Power
- Direct reading of digital data for higher accuracy
- Displays user-defined flow, level, volume, or pressure units
- Displays diagnostic messages for local troubleshooting
- 90-degree rotation capability for easy viewing

Configuration buttons

Rosemount 2088 now offers optional internal and external configuration buttons.

- Selecting option D4 will add external analog zero and span configuration buttons
- Selecting option DZ will add an external digital zero trim configuration button
- Selecting option M4 (LOI) adds both internal and external local configuration buttons.

Certain button options can also be combined as shown below:

Table 11. Button Configuration

Option codes	Internal	External
DZ	N/A	Digital zero trim
D4	N/A	Analog zero and trim
M4	LOI	LOI
M4 + DZ	LOI	Digital zero trim
M4 + D4	LOI	Analog zero and trim

Rosemount 2088 bracket option

B4 Bracket for 2-in. pipe or panel mounting

- Bracket for mounting of transmitter on 2-in. pipe or panel
- Stainless steel construction with stainless steel bolts

Global Headquarters
Emerson Process Management
6021 Innovation Blvd.
Shakopee, MN 55379, USA
+1 800 999 9307 or +1 952 906 8888
+1 952 949 7001
RFQ.RMD-RCC@EmersonProcess.com

North America Regional Office
Emerson Process Management
8200 Market Blvd.
Chanhassen, MN 55317, USA
+1 800 999 9307 or +1 952 906 8888
+1 952 949 7001
RMT-NA.RCCRFQ@Emerson.com

Latin America Regional Office
Emerson Process Management
1300 Concord Terrace, Suite 400
Sunrise, FL 33323, USA
+1 954 846 5030
+1 954 846 5121
RFQ.RMD-RCC@EmersonProcess.com

Europe Regional Office
Emerson Process Management Europe GmbH
Neuhofstrasse 19a P.O. Box 1046
CH 6340 Baar
Switzerland
+41 (0) 41 768 6111
+41 (0) 41 768 6300
RFQ.RMD-RCC@EmersonProcess.com

Asia Pacific Regional Office
Emerson Process Management Asia Pacific Pte Ltd
1 Pandan Crescent
Singapore 128461
+65 6777 8211
+65 6777 0947
Enquiries@AP.EmersonProcess.com

Middle East and Africa Regional Office
Emerson Process Management
Emerson FZE P.O. Box 17033,
Jebel Ali Free Zone - South 2
Dubai, United Arab Emirates
+971 4 8118100
+971 4 8865465
RFQ.RMTMEA@Emerson.com

Linkedin.com/company/Emerson-Automated-Solutions

Twitter.com/Rosemount_News

Facebook.com/Rosemount

Youtube.com/user/RosemountMeasurement

Google.com/+RosemountMeasurement

Standard Terms and Conditions of Sale can be found at:
www.Emerson.com/en-us/pages/Terms-of-Use
The Emerson logo is a trademark and service mark of Emerson Electric Co.
PlantWeb, THUM Adapter, Rosemount, and Rosemount logotype are trademarks of Emerson Process Management.
HART is a registered trademark of the FieldComm Group.
NEMA is a registered trademark and service mark of the National Electrical Manufacturers Association.
NACE is a registered trademark of NACE International.
All other marks are the property of their respective owners.
© 2016 Emerson Process Management. All rights reserved.

ROSEMOUNT™

EMERSON™

MODEL #: SPT25-20-0030A, SPT25-20-0060A

Prices as of April 27, 2016. Check Web site for most current prices.

ProSense® SPT25 Series Pressure Transmitters

The ProSense SPT25 pressure transmitter series is engineered to meet many industrial, commercial, and OEM pressure measurement applications. The all stainless steel welded thin film sensing element provides very fast response time and is compatible with many different media sensing applications. With a robust design resistant to vibration, shock, and EMI/RFI, the SPT25 series provides high accuracy over a wide compensated temperature range. Pressure sensing ranges from vacuum to 5000 psig are available along with a ¼ inch NPT male threaded process connection. Choose from linear outputs of 4-20 mA or 0-10VDC with electrical connections of either a DIN 175301-803C L-connector or 6.6 foot (2 m) integral shielded cable.

Applications

- Process control & automation
- Pump & compressor control
- Hydraulic systems
- Pneumatic systems
- Engine monitoring
- Refrigeration equipment
- Presses
- Machine tools

Features

- All stainless steel welded sensing element
- Fast response time
- Pressure sensing ranges from vacuum to 5000 psig
- 1/4 inch NPT male threaded process connection
- Output options: 4-20 mA or 0-10 VDC
- Integral 6.6 foot shielded cable or DIN form C electrical connections
- Made in the USA
- CE marked
- 3-year warranty

CE

ProSense SPT25 Series Pressure Transmitters (Shielded Cable)

Part Number	Description	Electrical Connection	Input Voltage	Wt(lb)	Price
SPT25-20-V30A	Pressure transmitter, 4 to 20 mA output, -14.7 vacuum to 30 psig range, 1/4" NPT male port	Integral 6.6 ft (2m) shielded cable	9 - 36 VDC	0.38	$115.00
SPT25-20-0030A	Pressure transmitter, 4 to 20 mA output, 0 to 30 psig range, 1/4" NPT male port				$115.00
SPT25-20-0060A	Pressure transmitter, 4 to 20 mA output, 0 to 60 psig range, 1/4" NPT male port				$115.00
SPT25-20-0100A	Pressure transmitter, 4 to 20 mA output, 0 to 100 psig range, 1/4" NPT male port				$115.00
SPT25-20-0150A	Pressure transmitter, 4 to 20 mA output, 0 to 150 psig range, 1/4" NPT male port				$115.00
SPT25-20-0200A	Pressure transmitter, 4 to 20 mA output, 0 to 200 psig range, 1/4" NPT male port				$115.00
SPT25-20-0300A	Pressure transmitter, 4 to 20 mA output, 0 to 300 psig range, 1/4" NPT male port				$115.00
SPT25-20-0500A	Pressure transmitter, 4 to 20 mA output, 0 to 500 psig range, 1/4" NPT male port				$115.00
SPT25-20-1000A	Pressure transmitter, 4 to 20 mA output, 0 to 1000 psig range, 1/4" NPT male port				$115.00
SPT25-20-1500A	Pressure transmitter, 4 to 20 mA output, 0 to 1500 psig range, 1/4" NPT male port				$115.00
SPT25-20-2000A	Pressure transmitter, 4 to 20 mA output, 0 to 2000 psig range, 1/4" NPT male port				$115.00
SPT25-20-3000A	Pressure transmitter, 4 to 20 mA output, 0 to 3000 psig range, 1/4" NPT male port				$115.00
SPT25-20-5000A	Pressure transmitter, 4 to 20 mA output, 0 to 5000 psig range, 1/4" NPT male port				$115.00
SPT25-10-V30A	Pressure transmitter, 0 to 10 V output, -14.7 vacuum to 30 psig range, 1/4" NPT male port		14 - 36 VDC		$115.00
SPT25-10-0030A	Pressure transmitter, 0 to 10 V output, 0 to 30 psig range, 1/4" NPT male port				$115.00
SPT25-10-0060A	Pressure transmitter, 0 to 10 V output, 0 to 60 psig range, 1/4" NPT male port				$115.00
SPT25-10-0100A	Pressure transmitter, 0 to 10 V output, 0 to 100 psig range, 1/4" NPT male port				$115.00
SPT25-10-0150A	Pressure transmitter, 0 to 10 V output, 0 to 150 psig range, 1/4" NPT male port				$115.00
SPT25-10-0200A	Pressure transmitter, 0 to 10 V output, 0 to 200 psig range, 1/4" NPT male port				$115.00
SPT25-10-0300A	Pressure transmitter, 0 to 10 V output, 0 to 300 psig range, 1/4" NPT male port				$115.00
SPT25-10-0500A	Pressure transmitter, 0 to 10 V output, 0 to 500 psig range, 1/4" NPT male port				$115.00
SPT25-10-1000A	Pressure transmitter, 0 to 10 V output, 0 to 1000 psig range, 1/4" NPT male port				$115.00
SPT25-10-1500A	Pressure transmitter, 0 to 10 V output, 0 to 1500 psig range, 1/4" NPT male port				$115.00
SPT25-10-2000A	Pressure transmitter, 0 to 10 V output, 0 to 2000 psig range, 1/4" NPT male port				$115.00
SPT25-10-3000A	Pressure transmitter, 0 to 10 V output, 0 to 3000 psig range, 1/4" NPT male port				$115.00
SPT25-10-5000A	Pressure transmitter, 0 to 10 V output, 0 to 5000 psig range, 1/4" NPT male port				$115.00

ProSense® SPT25 Series Pressure Transmitters

ProSense SPT25 Series Pressure Transmitters (DIN Connector)					
Part Number	**Description**	**Electrical Connection**	**Input Voltage**	**Wt(lb)**	**Price**
SPT25-20-V30D	Pressure transmitter, 4 to 20 mA output, -14.7 vacuum to 30 psig range, 1/4" NPT male port	DIN 175301-803C L-connector	9 - 36 VDC	0.30	$109.00
SPT25-20-0030D	Pressure transmitter, 4 to 20 mA output, 0 to 30 psig range, 1/4" NPT male port				$109.00
SPT25-20-0060D	Pressure transmitter, 4 to 20 mA output, 0 to 60 psig range, 1/4" NPT male port				$109.00
SPT25-20-0100D	Pressure transmitter, 4 to 20 mA output, 0 to 100 psig range, 1/4" NPT male port				$109.00
SPT25-20-0150D	Pressure transmitter, 4 to 20 mA output, 0 to 150 psig range, 1/4" NPT male port				$109.00
SPT25-20-0200D	Pressure transmitter, 4 to 20 mA output, 0 to 200 psig range, 1/4" NPT male port				$109.00
SPT25-20-0300D	Pressure transmitter, 4 to 20 mA output, 0 to 300 psig range, 1/4" NPT male port				$109.00
SPT25-20-0500D	Pressure transmitter, 4 to 20 mA output, 0 to 500 psig range, 1/4" NPT male port				$109.00
SPT25-20-1000D	Pressure transmitter, 4 to 20 mA output, 0 to 1000 psig range, 1/4" NPT male port				$109.00
SPT25-20-1500D	Pressure transmitter, 4 to 20 mA output, 0 to 1500 psig range, 1/4" NPT male port				$109.00
SPT25-20-2000D	Pressure transmitter, 4 to 20 mA output, 0 to 2000 psig range, 1/4" NPT male port				$109.00
SPT25-20-3000D	Pressure transmitter, 4 to 20 mA output, 0 to 3000 psig range, 1/4" NPT male port				$109.00
SPT25-20-5000D	Pressure transmitter, 4 to 20 mA output, 0 to 5000 psig range, 1/4" NPT male port				$109.00
SPT25-10-V30D	Pressure transmitter, 0 to 10 V output, -14.7 vacuum to 30 psig range, 1/4" NPT male port		14 - 36 VDC		$109.00
SPT25-10-0030D	Pressure transmitter, 0 to 10 V output, 0 to 30 psig range, 1/4" NPT male port				$109.00
SPT25-10-0060D	Pressure transmitter, 0 to 10 V output, 0 to 60 psig range, 1/4" NPT male port				$109.00
SPT25-10-0100D	Pressure transmitter, 0 to 10 V output, 0 to 100 psig range, 1/4" NPT male port				$109.00
SPT25-10-0150D	Pressure transmitter, 0 to 10 V output, 0 to 150 psig range, 1/4" NPT male port				$109.00
SPT25-10-0200D	Pressure transmitter, 0 to 10 V output, 0 to 200 psig range, 1/4" NPT male port				$109.00
SPT25-10-0300D	Pressure transmitter, 0 to 10 V output, 0 to 300 psig range, 1/4" NPT male port				$109.00
SPT25-10-0500D	Pressure transmitter, 0 to 10 V output, 0 to 500 psig range, 1/4" NPT male port				$109.00
SPT25-10-1000D	Pressure transmitter, 0 to 10 V output, 0 to 1000 psig range, 1/4" NPT male port				$109.00
SPT25-10-1500D	Pressure transmitter, 0 to 10 V output, 0 to 1500 psig range, 1/4" NPT male port				$109.00
SPT25-10-2000D	Pressure transmitter, 0 to 10 V output, 0 to 2000 psig range, 1/4" NPT male port				$109.00
SPT25-10-3000D	Pressure transmitter, 0 to 10 V output, 0 to 3000 psig range, 1/4" NPT male port				$109.00
SPT25-10-5000D	Pressure transmitter, 0 to 10 V output, 0 to 5000 psig range, 1/4" NPT male port				$109.00

0 to 10 VDC Output Wiring Diagram

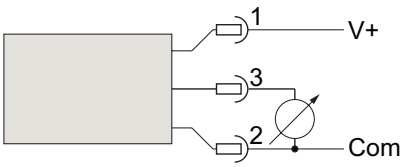

With DIN Connector

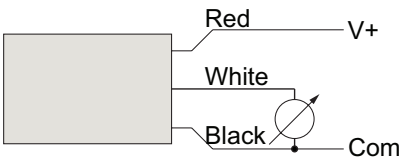

With Integral Cable

Shielded Cable Models Wire Designation		
Wire Color	**0 - 10 VDC Output**	**4 - 20 mA Output**
Red	V +	V +
Black	Com	Output
White	Output	None
Bare*	Shield Drain Wire	Shield Drain Wire

** Where shielded wiring is being used; Connect the drain wire to the guard terminal on the read out device or measuring instrument if available. In all other cases connect to the power supply negative terminal.*

4 to 20 mA Output Wiring Diagrams

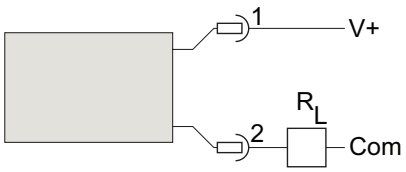

With DIN Connector

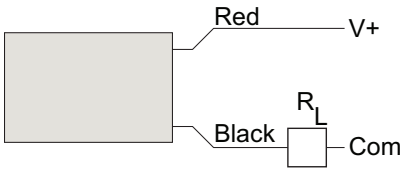

With Integral Cable

DIN Form C Models Pin Designation		
Pin No.	**0 - 10 VDC Output**	**4 - 20 mA Output**
1	V+	V+
2	Com	Output
3	Output	None
4	Case Ground	Case Ground

ProSense® SPT25 Series Pressure Transmitters

ProSense SPT25 Series General Specifications	
Housing Material	20% Glass Reinforced Nylon, Fire retardant to UL94 V1 / 304 Series Stainless steel
Materials (wetted parts)**	304 Series Stainless steel / 17-4PH Stainless Steel
Operating Temperature	–40 to 257°F (–40 to 125°C)
Medium Temperature	–40 to 257°F (–40 to 125°C)
Storage Temperature	–40 to 257°F (–40 to 125°C)
Protection	IP 67 for cabled models IP 65 For DIN connector models
Accuracy*	± 0.50% of full range
Temperature Coefficient	0.15% of full range / 10°F (0.25% of full range / 10°C)
Reference Temperature	70°F ± 1°F (21°C ± 1°C)
Compensated Temperature	–4 to 185°F (–20 to 85°C)
Insulation Resistance	Greater than 100 megohms at 100 VDC
Shock Resistance	100 gs, 6 ms
Vibration Resistance	Random vibration (20 g) over temperature range (-40° to 125°C). Exceeds typical MIL. STD. requirements
Drop Test	Withstands 1 meter on concrete 3 axis
Response Time	Less than 1 msec
Warm-up time	Less than 500 msec
Position Effect	Less than ±0.01% span, typical
Insulation Breakdown Voltage	100 VAC
Reverse Polarity & Miswired Protected	Yes
Durability	Tested to 50 million cycles
Humidity	0 to 100% R.H., no effect
Stability	Less than ±0.25% full range / year
Agency Approvals	CE
****Note - Includes non-linearity, hysteresis & non-repeatability.***	
***** Not cleaned for oxygen service***	

ProSense SPT25 Series Technical Specifications	
Technical Specifications SPT25-20-xxxx	
Operating Voltage	9 – 36 VDC
Analog Output	4 – 20 mA
Maximum Load	Determine Maximum Loop Resistances $\frac{V_L - 9\ \text{VDC}}{0.022\ \text{amps}} = R_L$ For example [(24 VDC – 9 VDC) / 0.022 amps] = 681Ω
Technical Specifications SPT25-10-xxxx	
Operating Voltage	14 – 36 VDC
Current Consumption	4 mA
Minimum Load	10 kΩ

Power Supply Voltage vs Loop Resistance

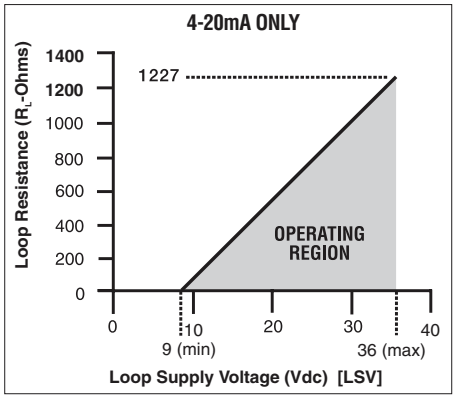

DIN Connector Specifications	
Number of contacts	3 + PE
Cable glands	PG 7
Conductor size max.	0.75 mm² / 18AWG
Type of termination	Screw
Suitable cables	4.5 mm to 6mm
Standard DIN	EN 175 301-803-C

ProSense SPT25 Proof & Burst Pressures		
	Proof	***Burst***
500 psig & below	200% full scale	1000% full scale
1000 – 2000 psig	200% full scale	500% full scale
3000 psig	200% full scale	500% full scale
5000 psig	150% full scale	500% full scale

See our website www.AutomationDirect.com for complete Engineering drawings.

Dimensions

inches [mm]

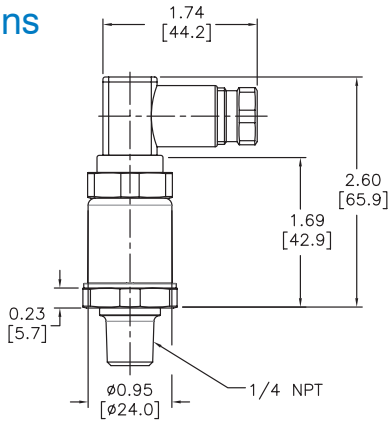

DIN Connector Models

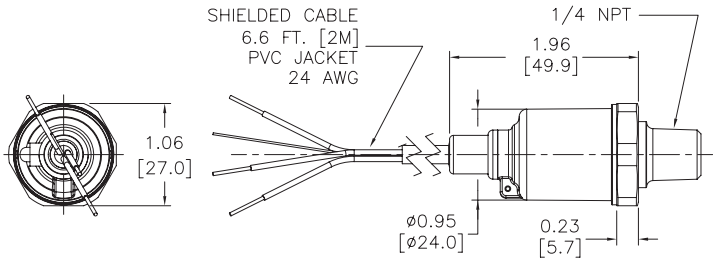

Shielded Cable Models

MODEL #: 9767053

Bourdon Tube Pressure Gauge Stainless Steel Construction Model 21X.53

Applications

- Intended for adverse service conditions where pulsating or vibration exists (with liquid filling)
- Hydraulics & compressors
- Suitable for gaseous or liquid media that will not obstruct the pressure system

Special Features

- Vibration and shock resistant (with liquid filling)
- Stainless steel case
- Pressure ranges up to 15,000 psi

Bourdon Tube Pressure Gauge Model 21X.53

Standard Features

Design
ASME B40.100 & EN 837-1

Sizes
2”, 2½” & 4” (50, 63 & 100 mm)

Accuracy class
2” & 2½”: ± 2/1/2% of span (ASME B40.100 Grade A)
4”: ± 1% of span (ASME B40.100 Grade 1A)

Ranges
Vacuum / Compound to 200 psi
Pressure from 15 psi to 15,000 psi
Pressure from 15 psi to 10,000 psi - 2” size
or other equivalent units of pressure or vacuum

Working pressure

2 & 2½”:	Steady:	¾ full-scale value
	Fluctuating:	⅔ full-scale value
	Short time:	full-scale value
4”:	Steady:	full-scale value
	Fluctuating:	0.9 x full-scale value
	Short time:	1.3 x full-scale value

Operating temperature
Ambient: -40°F to +140°F (-40°C to +60°C) - dry
-4°F to +140°F (-20°C to +60°C) - glycerine filled
-40°F to +140°F (-40°C to +60°C) - silicone filled
Medium: +140°F (+60°C) maximum

Temperature error
Additional error when temperature changes from reference temperature of 68°F (20°C) ±0.4% for every 18°F (10°C) rising or falling. Percentage of span.

Weather protection
Weather tight (NEMA 4X / IP 65)

Pressure connection
Material: copper alloy
Lower mount (LM) or center back mount (CBM) - 2” & 2½”
Lower mount (LM) or lower back mount (LBM) - 4”
⅛” NPT, ¼” NPT or ½” NPT limited to wrench flat areaABS (2” & 2½”) and white aluminum (4”)

Bourdon tube
2½" Size- Material: Copper alloy
30" Hg (VAC) to 800 psi - C-type (soldered)
1000 psi to 15,000 psi - helical type (soldered)
Changes to stainless steel at 7,500 psi brazed
4" Size- Material: Copper alloy ≤ 1,000 psi
316 stainless steel ≥ 1,500 psi
30" Hg (Vac) to 1,000 psi- C-type (soldered)
1,500 psi to 15,000 psi- helical type (brazed)
Changes to stainless steel at 1,500 psi

Movement
Copper alloy

Dial
White ABS (2" & 2½") and white aluminum (4")

Pointer
Black aluminum

Case
304 stainless steel with vent plug and stainless steel crimp ring. Suitable for liquid filling.

Case connection sealed with O-ring, (O-ring material dependent on the case fill):
- 2½": EPDM O-ring for Glycerine case fill; Viton O-ring for Silicone fill
- 4": EPDM O-ring for Glycerine or Silicone case fill; Viton O-ring for Halocarbon or Fluorolube fill

Window
Polycarbonate with Buna-N gasket

Case fill
Glycerine 99.7% - Type 213.53

Optional extras
- Brass restrictor
- Stainless steel front or rear flange - 2½" & 4"
- Zinc-plated steel or SS U-clamp bracket (field installable)
- External zero adjustment (2½" only)
- Red drag pointer or mark pointer
- Silicone or Fluorolube case filling
- Special connections limited to wrench flat area
- Custom dial layout
- Other pressure scales available
  bar, kPa, MPa, kg/cm^2 and dual scales

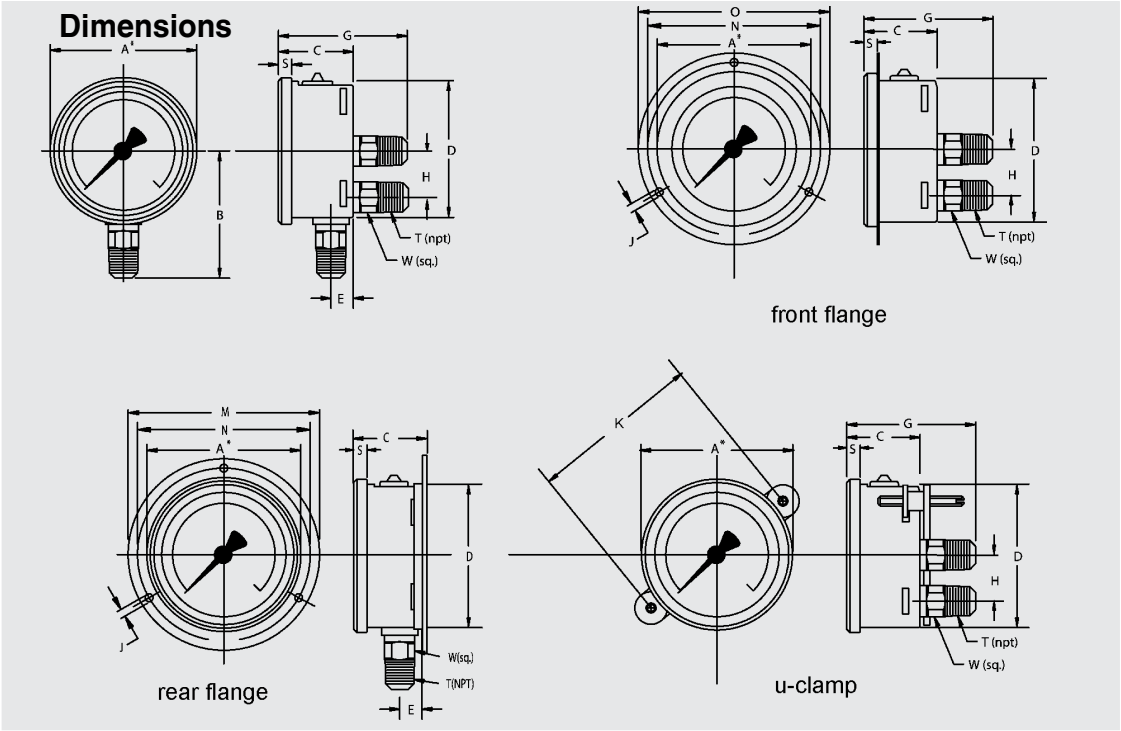

Size		A	B	C	D	E	G	H	J	K	M	N	O	S	T	W	Weight	
2”	mm	55	48	30	50	12	53	-	3.6	72	71	60	17	5.5		14	0.27 lb.	dry
	in	2.17	1.89	1.18	1.97	0.47	2.09	-	0.14	2.83	2.80	2.36	2.80	0.22	¼”	0.55	0.33 lb.	filled
2½”	mm	69	54	32	62	13	54	-	3.6	72	88.1	75	85	6.5		14	0.36 lb.	dry
	in	2.69	2.13	1.26	2.45	0.51	2.13	-	0.14	2.83	3.47	2.95	3.35	0.26	¼”	0.55	0.44 lb.	filled
4”	mm	107	87	48	100	15.5	79.5	30	4.8	109	132	116	132	8		22	1.10 lb.	dry
	in	4.21	3.43	1.89	3.91	0.61	3.13	1.18	0.19	4.29	5.20	4.57	5.20	0.31	½”	0.87	1.76 lb.	filled

Note: For ¼” NPT connections on 4” gauges, reduce B dimension by 5mm/0.2”

Recommended panel cut-out:

2”- U-clamp: 51mm
front flange: n/a

2½”- U-clamp: 63mm
front flange: 65mm

4”- U-clamp: 101mm
front flange: 104mm

4½”- panel mount adapter 104mm minimum
(not shown)

WIKA Instrument Corporation
1000 Wiegand Boulevard
Lawrenceville, GA 30043-5868
Tel: 888-WIKA-USA • 770-513-8200
Fax: 770-338-5118
E-Mail: info@wika.com
www.wika.com

MODEL #: V100

HPTANK2

ITT

Goulds Pumps

HydroPro®
Water System Tank

Engineered for life

1. Rugged, impact resistant exterior coatings.
Holds up under severe conditions.

2. Tamper proof mechanical-fit air valve.
No heat distortion from brazing. Recessed to prevent damage during shipping.

3. Deep drawn steel shell.
For added structural strength. Maximum working pressure 125 psi. (Except: V45MP & V60MP.)

4. Steel inner shell and insert.
Prevents over expansion of diaphragm for longer life.

5. Heavy-duty butyl diaphragm.
High quality FDA approved material for long, dependable service.

6. Rigid polypropylene liner.
Meets FDA and NSF requirements, providing maximum corrosion protection. Water never touches metal.

7.Patented positive retention system.
Securely fastens diaphragm and liner for years of reliable service.

8. Stainless steel system connection.
For optimal corrosion resistance.

9. Corrosion-proof base.
High density polyethylene is structurally reinforced for added strength. High profile design provides easy access for water hookup.

Base extension.
Optional (not shown).
Increases the height of the inlet/outlet a full 4" for easier installation. Fits any 15" diameter tank, from models V-45 to V-100. Standard on model V-80EX.

How the HydroPro tank works:

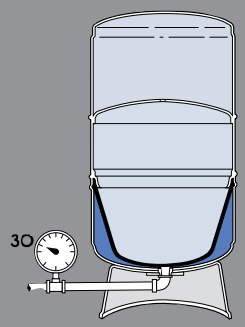

1. Tank is pre-pressurized with air at the factory.

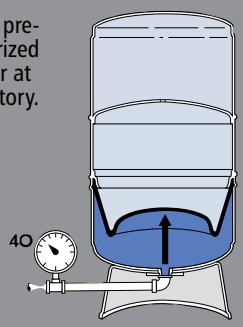

2. As water enters, air above the diaphragm is compressed and the volume is reduced by the same volume that enters.

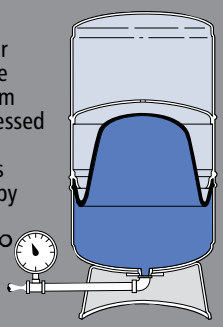

3. Water enters and pressure rises until the pump cut-out pressure is reached. Pump shuts off on full tank.

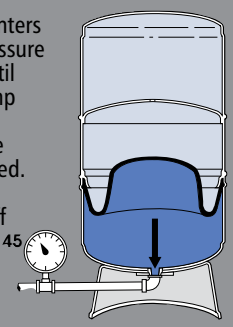

4. Pressure in the air chamber forces water into the system on demand, without the pump operating. When pressure drops to the cut-in point, the pump starts.

Consistent Supply... on Demand!

26 Models - 2 to 116 Gallon Capacity

HydroPro tanks provide years of dependable water system storage and delivery service! The efficient design reduces pump on/off cycles, resulting in longer motor and switch life, and reduced power costs. Each tank is factory tested and 100% air and water tight.

They Are Better Together

The most respected name in the water systems business brings you the toughest, most dependable tanks. Tanks with features that give you the best buy in quality water systems. HydroPro tanks qualify for both the Goulds ProSurance® Program and the Goulds Dealer Incentive Plan.

	Std. Model No.	Union Model No.	Total Volume (Gals.)	Drawdown in Gals. at System Operating Pressure Range of			Maximum Drawdown Vol. (Gals.)	Pre-Charge PSI	System Connection	Dimensions		Shipping Weight
				20/40 PSIG	30/50 PSIG	40/60 PSIG				Diameter	Height	
Stand Models	V45	V45U	13.9	5.1	4.3	3.7	8.4	38	1" NPTF	15 3/8	24 15/16	23
	V60	V60U	19.9	7.3	6.1	5.3	12.1	38	1" NPTF	15 3/8	32 3/8	34
	V80	V80U	25.9	8.9	7.7	6.7	13.9	38	1" NPTF	15 3/8	39 9/16	43
	V80EX	V80EXU	25.9	8.9	7.7	6.7	13.9	38	1" NPTF	15 3/8	42 5/8	43
	V100	V100U	31.8	11.8	9.9	8.6	13.8	38	1" NPTF	15 3/8	47 1/4	52
	V100S	V100SU	31.8	11.8	9.9	8.6	13.8	38	1" NPTF	22	28	56
	V140	V140U	45.2	16.5	13.9	12.1	27.3	38	1 1/4" NPTF	22	36 9/16	64
	V200	V200U	65.1	23.9	20.0	17.4	39.3	38	1 1/4" NPTF	22	48 5/8	89
	V250	V250U	83.5	30.9	25.9	22.5	50.8	38	1 1/4" NPTF	26	46	116
	V260	V260U	84.9	31.2	26.2	22.8	44.7	38	1 1/4" NPTF	22	60 11/16	113
	V350	V350U	115.9	42.9	35.9	31.3	70.5	38	1 1/4" NPTF	26	61 5/16	161
Mounted Pump Models*		V45MP	13.9	5.1	4.3	3.7	8.4	38	3/4" Pipe	15 3/8	25 11/16	28
		V60MP	19.9	7.3	6.1	5.3	12.1	38	3/4" Pipe	15 3/8	33 1/8	40
		V45PST	13.9	5.1	4.3	3.7	8.4	38	3/4" Pipe	15 3/8	25 11/16	28
		V60PST	19.9	7.3	6.1	5.3	12.1	38	3/4" Pipe	15 3/8	33 1/8	40
Buried Models		V45B	13.9	5.1	4.3	3.7	8.4	38	1" NPTM	15 3/8	21 1/16	23
		V60B	19.9	7.3	6.1	5.3	12.1	38	1" NPTM	15 3/8	28 1/2	33
		V140B	45.2	16.5	13.9	12.1	27.3	38	1 1/4" NPTM	22	32 3/16	63
		V200B	65.1	23.9	20.0	17.4	39.3	38	1 1/4" NPTM	22	44 1/4	87
In-Line Models		V6P	2.0	0.7	0.6	0.5	1.2	38	3/4" NPTM	8	11 15/16	8
		V15P	4.5	1.7	1.4	1.2	2.7	38	3/4" NPTM	11	13 15/16	12
		V25P	8.2	3.1	2.6	2.2	4.5	38	3/4" NPTM	11	23 1/16	21
		V45P	13.9	5.1	4.3	3.7	8.4	38	1" NPTM	15 3/8	21 1/16	24
Horizontal Models w/ Bracket		V25H	8.2	3.1	2.6	2.2	4.5	38	3/4" NPTM	11	24 9/16	23
		V45H	13.9	5.1	4.3	3.7	8.4	38	1" NPTM	15 3/8	22 9/16	26
		V60H	19.9	7.3	6.1	5.3	12.1	38	1" NPTF	15 3/8	33 7/8	36

NOTES:
* Compatible with only certain Goulds pumps.

P = Pipe mounted
MP = Mounted pump
EX = With base extension
PST = Pump system tank
B = Buried
H = Horizontal with bracket
U = Union Connection

(All dimensions are in inches and weight in lbs. Do not use for construction purposes.)

Shelter tank from corrosive spray, chlorine or groundwater with high salinity. Do Not install tank where it will be subjected to spray from irrigation or landscape sprinkler systems.

GOULDS PUMPS

ITT
2881 East Bayard Street
Seneca Falls, NY 13148
Phone: (315) 568-7123
Fax: (315) 568-7973
www.goulds.com

Copyright © 2010 ITT Corporation HPTANK2 April, 2010 Printed in U.S.A.
SPECIFICATIONS ARE SUBJECT TO CHANGE WITHOUT NOTICE.

ITT
Engineered for life

EchoSonic® II LU23/27/28/29 Ultrasonic Level Transmitter

Application

MODEL #: LU27-01

LU23/28/29

LU27

The general purpose ultrasonic level transmitter provides continuous level measurement up to 32.8' (10m) with a 4-20 mA signal output, and is configured via our free Webcal software. This non-contact liquid level sensor is ideally suited for corrosive, ultrapure, sticky or dirty liquids, and is broadly selected for bulk storage, day tank, lift station and process tank level applications.

RoHS Compliant CE

Features

- Offered in 4 measurement ranges from 9.8' (3m) to 32.8' (10m)
- DSP auto adaptive filters enable plug and play operation optimizing signal output filtering and obstacle recognition
- Configuration is fast and easy via WebCal software and USB adapter
- Narrow 2" or 3" beam width for applications with limited measurement space
- Short 4" or 8" dead band maximizes the measureable filling capacity of the tank
- PVDF transducer and NEMA 4X polycarbonate enclosure for corrosive liquids
- Automatic temperature compensation for accurate measurement

Success

Ultrasonic level sensors are often used to measure open channel water flow thats discharged from rivers, streams, creeks, lakes or ponds. Here an EchoSonic II level sensor is installed on the upstream side of a weir. The non-contact sensor measures the gravity-fed, liquid surface height as it passes through the V-notch, and provides a continuous 4-20 mA signal output. The PLC converts level height into flow volume with rate, totalization and data-logging functions for wastewater treatment and environmental reporting.

Compatible Products

DataLoop™
Level Indicator

LI25

DataView™
Level Controller

LI55

Commander™
Multi-Tank Level Controller

LI90

DataPoint™
Level Controller

LC52

Specifications

Range:	LU27: 4” to 9.8’ (10cm to 3m)
	LU23: 8” to 18.0’ (20cm to 5.5m)
	LU28: 8” to 24.6’ (20cm to 8m)
	LU29: 8” to 32.8’ (20cm to 10m)
Accuracy:	± 0.2% of range
Resolution:	LU27: 0.019” (0.5mm)
	LU23: 0.039” (1mm)
	LU28/29: 0.079” (2mm)
Dead band:	LU27: 4” (10cm)
	LU23/28/29: 8” (20cm)
Beam width:	LU27: 2” (5cm)
	LU23/28/29: 3” (7.6cm)
Configuration:	WebCal® PC
	Windows® USB 2.0
Memory:	Non-volatile
Supply voltage:	24 VDC (loop)
Consumption:	0.5W
Loop resistance:	500 ohms @ 24 VDC
Signal output:	4-20 mA, two-wire
Signal invert:	4-20 mA or 20-4 mA
Signal fail-safe:	4 mA, 20 mA, 21 mA,
	22 mA or hold last
Process temp.:	F: -4º to 140º
	C: -20º to 60º
Temp. comp.:	Automatic
Ambient temp.:	F: -31º to 140º
	C: -35º to 60º
Pressure:	MWP = 30 PSI (2 bar)
Enclosure rating:	NEMA 4X (IP65)
Encl. material:	Polycarbonate
Trans. material:	PVDF
Cable jacket mat:	Polyurethane
Cable type:	4-conductor, shielded
Process mount:	LU27: 1” NPT (1” G)
	LU23/28/29: 2” NPT (2” G)
Mount gasket:	Viton®
Classification:	General purpose
Compliance:	CE, RoHS
Approvals:	cFMus

Dimensions

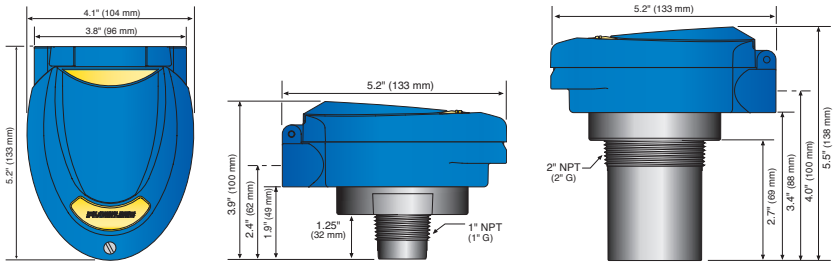

Configuration

The level sensor is configurable via our free WebCal PC software and Fob USB adapter. The sensors are offered with and without Fobs. Fobs are universal and can be used to configure any WebCal compatible product. Download your free copy of WebCal in English or Chinese at www.flowline.com/webcal.php.

LI99-1001

Fittings

For optimum performance, install the level sensor using the below recommended or direct equivalent fittings.

P/N	Description
LM52-1400	2” NPT x 1” NPT (Sch. 40)
LM52-2400	3” NPT x 2” NPT (Sch. 40)
LM52-2800	3” NPT x 2” NPT (Sch. 80)
LM52-3800	4” NPT x 2” NPT (Sch. 80)
LM52-1410	2” Socket x 1” NPT (Sch. 40)
LM52-2410	3” Socket x 2” NPT (Sch. 40)
LM52-3410	4” Socket x 2” NPT (Sch. 40)
LM52-2810	3” Socket x 2” NPT (Sch. 80)
LM52-3810	4” Socket x 2” NPT (Sch. 80)
LM52-2890	2” NPT Bulkhead Fitting, PVC
LM50-1001-1	1” NPT Bracket, PP
LM50-1001	2” NPT Bracket, PP

Ordering

LU2□-□□

Sensor range

7	*3m (9.8')*
3	*5.5m (18.0')*
8	*8m (26.2')*
9	*10m (32.8')*

Process mount (1)

4	*NPT (US)*
5	*G (Metric)*

Fob USB adapter (2)

0	*Without Fob*
1	*With Fob*

Notes

1) Install the level sensor using Flowline installation fittings or equivalents.
2) The level sensor is configured via our WebCal software and one LI99-1001 Fob USB adapter. The level sensor is offered with and without a Fob. Fobs are universal and can be Used to configure any WebCal compatible product. WebCal is a free download from our website at www.flowline.com/webcal.php.

MODEL #: 700S14A0A043.341000.000C10525B

KPSI 700

- Submersible level transducer
- ±1.00% FS static accuracy
- Custom built in two days
- Two year warranty

The KPSI 700 is a submersible hydrostatic level transducer specifically designed to meet the rigorous environments encountered in liquid level measurement and control. It can be configured to perform to specifications under most adverse, reactive conditions.

Every KPSI Transducer utilizes a highly accurate pressure sensor assembly specifically designed for hostile fluids and gases. The assembly is integrated with supporting electronics in a durable waterproof housing constructed of 316 stainless steel or titanium. The attached electrical cable is custom manufactured and includes para-aramid synthetic fiber members to prevent errors due to cable elongation, and a unique water block feature that self-seals in the event of accidental cuts to the cable. Each vented reference transducer is shipped with a SuperDry Vent Filter that prevents moisture from entering the vent tube for at least one year without maintenance, even in the most humid environments.

Features

- Custom polyurethane or ETFE cable lengths
- Welded 316SS or titanium body
- Custom level ranges up to 700 ft. (210 m) H_2O
- Multiple analog output
- Multiple nose piece styles
- Optional lifetime lightning protection
- Long life vent filter or aneroid bellows
- Available molded cable seal

Applications

- Lift stations
- Pump control
- Level control
- Surface water monitoring
- Landfill leachate
- Well monitoring
- Groundwater monitoring

Specifications

PARAMETER		COMMENT
LEVEL RANGES		
Full Scale Level Ranges (Intermediate level ranges are available)	2.3 thru 700 ft. H_2O (0.70 thru 210 m H_2O)	Vented Gage Reference
	10 thru 700 ft. H_2O (3 thru 210 m H_2O)	Sealed Gage Reference
	35 thru 700 ft. H_2O (10 thru 210 m H_2O)	Absolute Gage Reference
Proof Pressure	1.5 x FS	
Burst Pressure	2.0 x FS	

STATIC PERFORMANCE		
Static Accuracy (combined effects of non-linearity, hysteresis and repeatability, best fit straight line method)	±1.00% FSO	BFSL method
Resolution	+0.0001% FS	
ENVIRONMENTAL		
Wetted Materials	316 SS or Titanium; POM; FKM; Polyurethane or ETFE	
Compensated Temp Range	0 to 50ºC	
Thermal Error (maximum allowable deviation from the Best Fit Straight Line due to a change in temperature)	±0.05% FSO/ºC ±0.1% FSO/ºC	Worse case over compensated temperature range for ranges < 12 ft. (4 m) H_2O
Operating Temp Range	-20 to 60 ºC	When attached to polyurethane cable
Protection Rating	IP 68, NEMA 6P	
ELECTRICAL		
Excitation	9-28V – VDC output 9-28V – mA output 15-28V – VDC output 10-28V – VDC output	0-5 V, 0-2.5 V, 0-4 V 4-20 0-10 V 1.5-7.5 V
Input Current	20 mA max., 3.5 mA max.	For mA output, for VDC output
Output	4-20 mA, 0-5 VDC, 0-2.5 VDC, 0-4 VDC, 0-10 VDC, 1.5-7.5 VDC	For ranges < 5 ft. (1.5m) H_2O, only 4-20mA output is available
Zero Offset	±0.25 mA for mA output < 0.25 VDC for VDC output	
Output Impedance	See loop diagram for mA output 20 ohm for VDC output	
Insulation Resistance	100 mega ohm at 50 VDC	
Circuit Protection	Polarity, surge/shorted output	
CERTIFICATIONS		
	CE compliant	EN 61326-1:2013 and 61326-2-3:2013
	UL, CUL and FM	Class I, II, III, Div. 1, Groups A,B,C,D,E,F&G
	WEEE/RoHS	Waste from Electrical and Electronic Equipment (WEEE) and Restrictions on the use of Hazardous Substances (RoHS)
PHYSICAL		
Approximate Weight	0.44 lbs. (198 g) transducer 0.05 lbs./ft. (79 g/m) cable	
Cable Jacket Material	Polyurethane (Standard), ETFE (Optional)	
Cable Pull Strength	200 lbs (90 kg)	Polyurethane
Cable Number of Conductors	4 max.	
Cable Conductor Size	22 AWG	
Cable Seal	Molded Polyurethane FKM Gland	For polyurethane cable For ETFE cable
TEMPERATURE OUTPUT OPTION (Not Intrinsically safety approved)		
Temperature Range	-20 to 60ºC	Available for 4-20 mA output versions only
Output Signal	4-20 mA	
Temperature Measurement Accuracy	±4ºC	±1ºC with single point calibration
LIGHTNING PROTECTION (Power supply needs to be limited to 150mA to avoid lock up of the gas tube after a suppression event)		
Life Expectancy	>1,000 Operations	
Peak Clamping Voltage	36 Volts	
Response Time	<10 nsecs	
Shunts	20,000 Amperes	

Dimensions

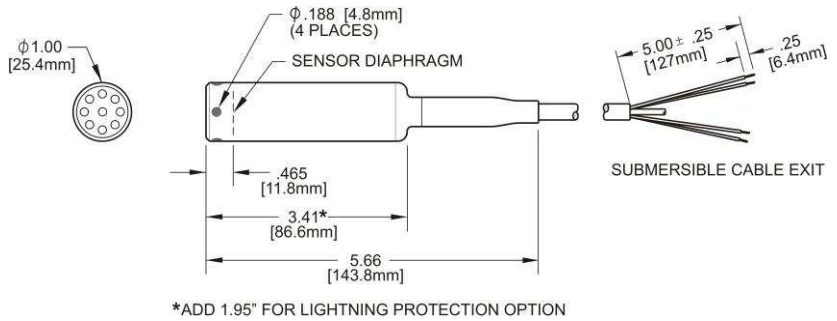

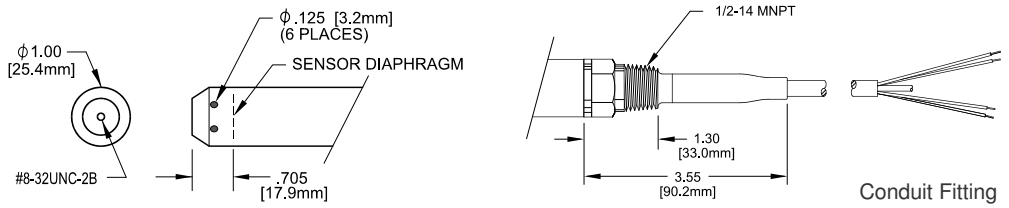

Molded Cable Seal Configuration for Polyurethane Cable

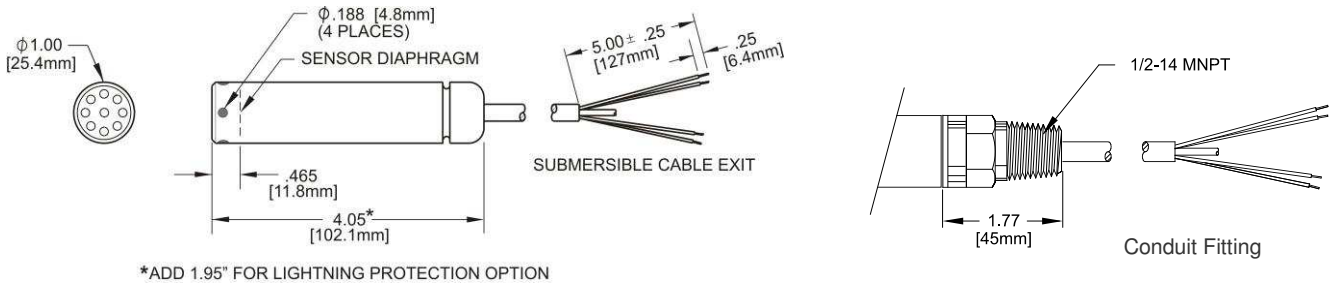

Gland Cable Seal Configuration for ETFE Cable

Electrical Termination / Loop Resistance

ELECTRICAL TERMINATION		
22AWG CONDUCTORS IN A SHIELDED CABLE WITH VENT TUBE		
4-20 mA	RED BLACK	+ EXCITATION - EXCITATION
0-5 VDC	RED BLACK WHITE	+ EXCITATION - EXCITATION + SIGNAL
ALL	DRAIN WIRE	SHIELD

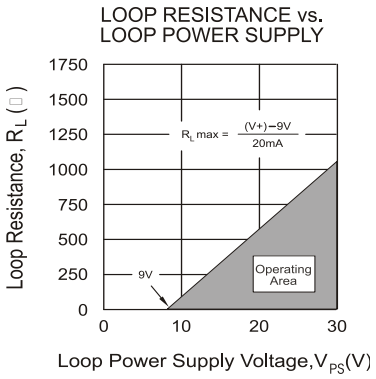

MODEL #: 700S14A0A043.341000.000C10525B

Ordering Information

MODEL — **SUBMERSIBLE LEVEL TRANSDUCER**

- 7 0 0 — ±1.00% FSO Static Accuracy

MATERIAL

- S — Stainless Steel
- T — Titanium

REFERENCE FORMAT

- 1 — Vented gage
- 3 — Sealed gage
- 4 — Absolute

OUTPUT

- 3 — 0-5 VDC
- F — 0-2.5 V
- G — 0-4 V
- H — 0-10 V
- J — 1.5-7.5V
- 4 — 4-20mA
- 6 — 4-20mA temperature measurement option

PRESSURE CONNECTION

- A — Open-face nose cap
- B — Ported nose cap
- E — Piezometer nose cap
- 2 — 1/4" - 18 NPT male fitting
- 7 — 1/2" - 14 NPT male fitting

ELECTRICAL CONNECTION

- 0 — Molded cable seal
- 4 — 1/2" - 14 NPT male conduit fitting with molded cable seal
- A — Gland cable seal
- B — 1/2" - 14 NPT male conduit fitting with gland cable seal

LIGHTNING PROTECTION

- A — None
- B — Full Lightning Protection

LEVEL RANGE (at MAX output)[1]

. # #

LEVEL RANGE (at MIN output)[1]

. # #

MOISTURE PROTECTION

- A — None (sealed/absolute only)
- B — Vent Filter
- C — Aneroid Bellows
- D — Stainless Steel Vent Filter

CABLE TYPE

- 1 — Polyurethane
- 2 — ETFE (Electrical Connection "A" or "B" Only)

CABLE LENGTH

(in feet)

LABEL[2]

- A — psi
- B — ft H_2O
- C — m H_2O

7 0 0 043.341 000.000 0525

Notes:

1. The part number requires two level range limits, corresponding to the maximum and minimum analog outputs of the transducer, to be specified in **pounds per square inch (psi)** to three decimal places. The lower level range is typically 000.000 unless otherwise required. For reverse output requirements, enter the lower level range for the maximum output signal and the upper range for the minimum output. Use the following conversion factors: **Ft. H_2O / 2.3073 = psi** // **m H_2O / 0.703265 = psi**
   Examples: 10 ft. H_2O / 2.3073 = 4.334 psi (Enter 004.334 in the part number), 10 m H_2O / 0.703265 = 14.219 psi (Enter 014.219 in the part number)
   For sealed gage reference add local atmosphere when converting to psi. Contact PSI for assistance.
   Example: 10 ft. H_2O / 2.3073 +14.7 = 19.034 psi (Enter 019.034 in the part number)
2. Units of measure on standard MEAS label. Contact Measurement Specialties if private labeling is required.

NORTH AMERICA

Measurement Specialties, Inc.,
a TE Connectivity company
1000 Lucas Way
Hampton, VA 23666
Tel : 1-757-766-1500
Fax : 1-757-766-4297
Toll Free: 1-800-745-8008
Email: WL.Sales@te.com

EUROPE

Measurement Specialties (Europe), Ltd.,
a TE Connectivity company
26 Rue des Dames
78340 Les Clayes-sous-Bois, France
Tel : +33 (0) 130 79 33 00
Fax : +33 (0) 134 81 03 59
Email: customercare.lcsb@te.com

ASIA

Measurement Specialties (China), Ltd.,
a TE Connectivity company
No. 26 Langshan Road
Shenzhen High-Tech Park (North)
Nanshan District, Shenzhen 518057 China
Tel : +86 755 3330 5088
Fax : +86 755 3330 5099
Email: customercare.shzn@te.com

te.com/sensorsolutions

Measurement Specialties Inc., a TE Connectivity company.

Measurement Specialties (MEAS), American Sensor Technologies (AST), TE Connectivity, TE Connectivity (logo) and EVERY CONNECTION COUNTS are trademarks. All other logos, products and/or company names referred to herein might be trademarks of their respective owners.

The information given herein, including drawings, illustrations and schematics which are intended for illustration purposes only, is believed to be reliable. However, TE Connectivity makes no warranties as to its accuracy or completeness and disclaims any liability in connection with its use. TE Connectivity's obligations shall only be as set forth in TE Connectivity's Standard Terms and Conditions of Sale for this product and in no case will TE Connectivity be liable for any incidental, indirect or consequential damages arising out of the sale, resale, use or misuse of the product. Users of TE Connectivity products should make their own evaluation to determine the suitability of each such product for the specific application.

© 2016 TE Connectivity Ltd. family of companies All Rights Reserved.

MODEL #: FLS-VM-200

Prices as of April 27, 2016. Check Web site for most current prices.

ProSense® Float Level Switches, Vertical Top-Mount

Float Level Switch Specifications											
Part No.	**Price**	**Float Material**	**Stem Material**	**Temperature Range**	**Pressure**	**Float Specific Gravity**	**Electrical Rating***	**Lead Wires**	**Mounting Thread**	**Approvals**	**Weight (lbs)**
FLS-VM-100	$10.50	Polypropylene (PP)	Polypropylene (PP)	-40°F to 221°F [-40°C to 105°C]	100 psig [6.9 bar]	0.8	SPST-NC, 30W max 240VAC, 0.14 A 120VAC, 0.28 A 120VDC, 0.07 A 24VDC, 0.28 A	22AWG, MTW 24in	1/8 in MNPT (Install ± 30° max from vertical)	cURus, CSA, CE (See Approvals table for details)	0.1

** Normally closed switch. Can be converted in the field to function as normally open as described under "Operation". Electrical ratings are for resistive loads ONLY. For inductive loads, maximum life will be obtained with the use of appropriate transient suppression such as an MOV or TVS.*

Caution: Not recommended for use with PLC AC inputs or other digital AC input devices due to damage that may occur to the switch or input device.

Dimensions

inches [mm]

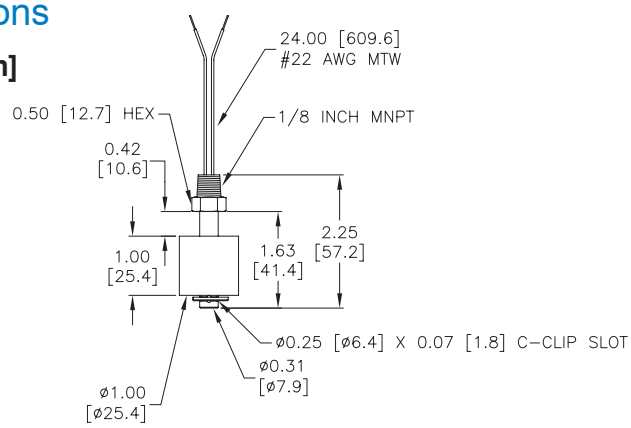

Float Level Switch Specifications											
Part No.	**Price**	**Float Material**	**Stem Material**	**Temperature Range***	**Pressure**	**Float Specific Gravity**	**Electrical Rating[1]**	**Lead Wires**	**Mounting Thread**	**Approvals**	**Weight (lbs)**
FLS-VM-200	$12.00	Buna-N	Polybutylene Terephthalate (PBT)	-40°F to 221°F [-40°C to 105°C]	150 psig [10.4 bar]	0.45	SPST-NC, 30W max 240VAC, 0.14 A 120VAC, 0.28 A 120VDC, 0.07 A 24VDC, 0.28 A	22AWG, Teflon 24in	1/8 in MNPT (Install ± 30° max from vertical)	cURus, CSA, CE (See Approvals table for details)	0.1

** Not for use in hot water at temperatures above 149ºF [65ºC]*

[1] Normally closed switch. Can be converted in the field to function as normally open as described under "Operation". Electrical ratings are for resistive loads ONLY. For inductive loads, maximum life will be obtained with the use of appropriate transient suppression such as an MOV or TVS.

Caution: Not recommended for use with PLC AC inputs or other digital AC input devices due to damage that may occur to the switch or input device.

Dimensions

inches [mm]

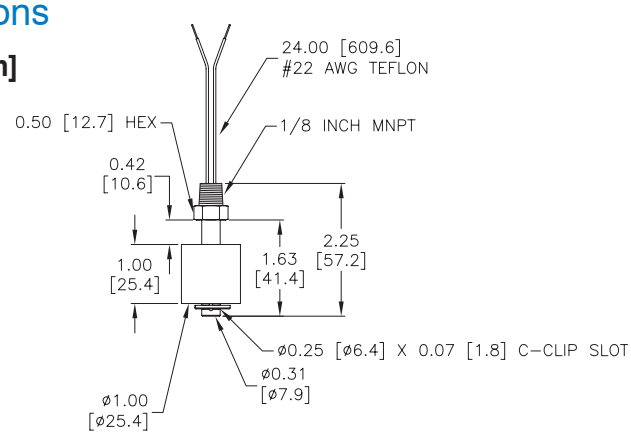

prosense® Float Level Switches

Agency Approvals					
Part Number	cURus (E320431)	UR Class I, Group A,B,C,D / Class II, Group E, F, G / Class III (E366154)	CSA (2679134)	CSA Class I, Group A,B,C,D / Class II, Group E, F, G / Class III (2685021)	CE
FLS-VS-100	✔				✔
FLS-VS-200					✔
FLS-VM-100	✔		✔		✔
FLS-VM-200	✔		✔		✔
FLS-VM-300	✔		✔		✔
FLS-VM-400	✔		✔		✔
FLS-VM-500	✔				✔
FLS-VM-600					✔
FLS-VL-010	✔		✔		✔
FLS-VL-020	✔		✔		✔
FLS-VL-030	✔		✔		✔
FLS-VL-040			✔		✔
FLS-VL-100	✔		✔		✔
FLS-VL-200	✔		✔		✔
FLS-VL-300	✔		✔		✔
FLS-VL-400		✔		✔	✔
FLS-VL-500					✔
FLS-VL-600					✔
FLS-VL-900					✔
FLS-HS-100	✔		✔		✔
FLS-HS-200	✔		✔		✔
FLS-HS-300					✔
FLS-HM-100	✔		✔		✔
FLS-HM-200	✔	✔		✔	✔
FLS-HM-300	✔				✔
FLS-HL-010					✔
FLS-HL-200	✔				✔
FLS-BM-100					✔
FLS-BM-200					✔
FLS-BM-300	✔		✔		✔
FLS-BL-100					✔
FLS-VK-100	✔				✔
FLS-VK-200	✔				✔
FLS-VK-300	✔				✔
FLS-HT-100					✔
FLS-HT-200					✔

ProSense Float Level Switches

ProSense float level switches provide a low-cost general purpose solution for single point monitoring of liquid level in a variety of applications. Powerful permanent magnets within the float actuate a highly reliable and repeatable hermetically sealed reed switch as the float rises and lowers with liquid level. These switches are available in several different material constructions for compatibility with many types of liquids, a wide temperature range, and system pressure requirements. Vertical and horizontal mounting styles with several mounting thread variations are offered for ease of installation. Reed switches carry electrical ratings for both AC and DC voltage for adaptability to many control interface applications. Although these switches come configured for normally closed operation, most models can be easily converted to normally open operation in the field. Designed to be shock and vibration resistant, ProSense float level switches ensure long and trouble-free service.

Features

- Low-cost solution for general purpose single point liquid level monitoring
- Magnetically operated, highly reliable and repeatable hermetically sealed reed switch
- Vertical and horizontal mounting styles with a variety of mounting threads
- Several material constructions for compatibility with different liquids
- Electrical ratings for AC and DC voltage
- Most switches easily converted in the field from normally closed to normally open operation
- Made in the USA

Operation

ProSense float level switches are shipped configured for normally closed switch operation. Except where noted, most models can be easily converted to normally open operation in the field.

Vertical Mount Switches

For Vertical Mount switches, normally closed is defined as the switch mounted in a vertical position with the mounting threads above the float (top mount) and the float in the "dry" position at the bottom of the stem (Figure 1). When the liquid raises the float, the switch will open.

To change the operation of the switch to normally open, remove the C-clip, remove the float from the stem, flip the float 180 degrees, re-install the float on the stem and replace the C-clip. Now the switch will be normally open in the "dry" position and will close when the liquid raises the float.

Vertical Mount switches can also be mounted with the mounting threads below the float (bottom mount) as in the bottom of a tank. If bottom mounted, switch operation will be the opposite of top mounted installation described above.

Horizontal Mount Switches

For Horizontal Mount switches installed in the side of a tank (side-mounted), normally closed is defined as when the float arm is below and parallel with the stem in the "dry" position (Figure 2). When the liquid raises the float, the switch will open.

To change the operation of the switch, rotate the installed position of the switch 180 degrees so the float arm is above and hanging at an angle with the stem. Now the switch will be normally open in the "dry" position and will close when the liquid raises the float.

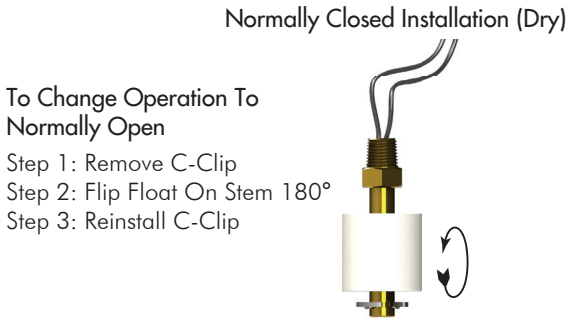

Figure 1: Vertical (Top) Mount Switch Operation

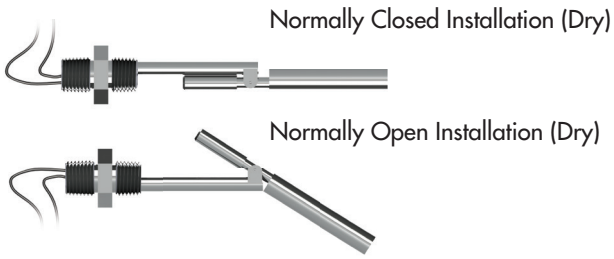

Figure 2: Horizontal Mount Switch Operation

MODEL #: E711-368SI

Data Sheet

Series E

Electronic Metering Pumps

Configuration Data

Model E7 1 1 - 368SI

Control & Output Code
Instrument Responsive/Manual Control
Explosion proof electromagnetic metering pumps. UL and CUL Listed, meets or exceeds all standards for Division 1 and 2, Class I, Groups C and D; Class II, Groups E, F, and G. Manual adjustment or switch conversion to external control for automatic systems.
E70* --- 1.3 GPH (4.9 l/h) .... 300 psi (20.7 Bar)
E71* --- 2.5 GPH (9.5 l/h) .... 150 psi (10.3 Bar)
E72* --- 4.0 GPH (15.1 l/h) .... 100 psi (6.9 Bar)
E73* --- 8.0 GPH (30 l/h) ..... 60 psi (4.1 Bar)
E74* ---20.0 GPH (76 l/h) ..... 25 psi (1.7 Bar)

Voltage Code
1 --------- 120 VAC Hardwired
2 --------- 240 VAC Hardwired

Liquid End
See next page for complete liquid end specifications & selection.

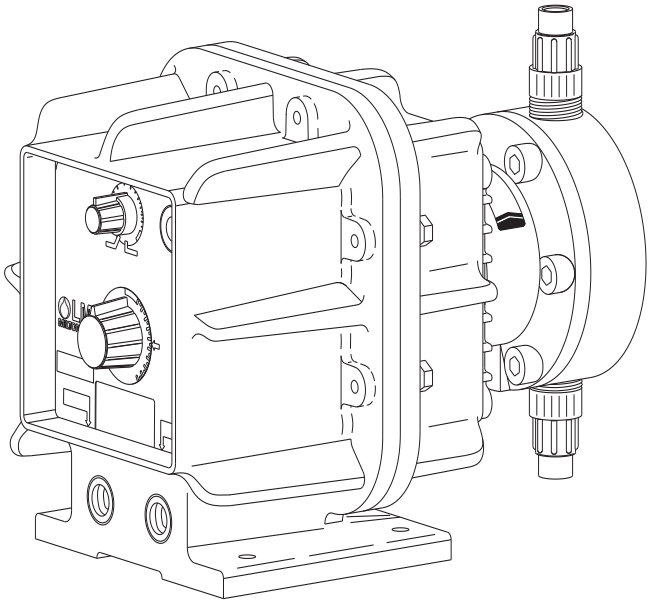

Dimensions

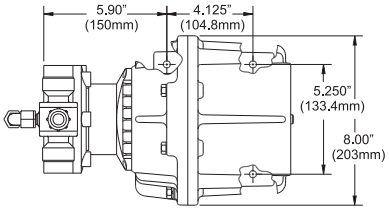

* Dimensions shown are maximums for largest available Liquid End. Dimensions will vary depending on Liquid End selected.

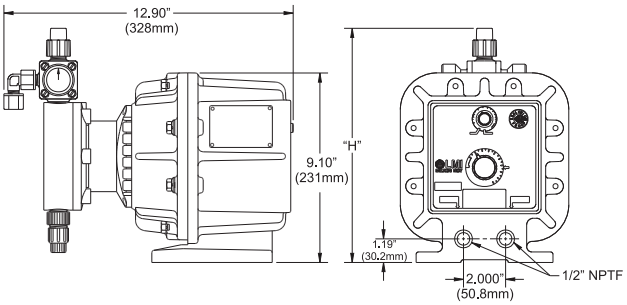

Specifications

Series	Strokes per Minute (Adjustable) Min	Max	Stroke Length (Adjustable) Recommended Minimum	Average Input Power @ Max Speed	Shipping Weight
E70* E71* E72* E73* E74*	5	100	10%	44 watts	(41 lbs) 18.6 kg

LMI MILTON ROY

201 Ivyland Road
Ivyland, PA 18974 USA
TEL: (215) 293-0401
FAX: (215) 293-0445
http://www.lmipumps.com

Replaces same of Rev. D 8/01
1586.E 6/09

MODEL #: E711-368SI

Standard Liquid End Configuration Data & Materials of Construction

Drive Assembly	Liquid End No.	Size Code	Materials of Construction: Head & Fittings	Balls	Liquifram™	Check Valve	Accessory	Tubing & Connections: Discharge Suction
E70 ■ -	498SP	0.9	PVC	Ceramic	Fluorofilm™	PVDF / Polyprel®	4FV	Pipe 1/2" NPT M
	297	0.9	316 S.S.	316 S.S.	Fluorofilm™	316 S.S.		Pipe 1/4" NPT M
E71 ■ -	368SI	1.8	PVC	Ceramic	Fluorofilm™	PVDF / Polyprel®	4FV	PE .375" O.D.
	362SI	1.8	PVDF / PVDF	Ceramic	Fluorofilm™	PVDF / Polyprel®	4FV	PE .375" O.D.
E72 ■ -	363SI	1.8	PVDF / PVDF	Ceramic	Fluorofilm™	PVDF / PTFE	4FV	PE .375" O.D.
	460SI	1.8	Acrylic / PVC	Ceramic	Fluorofilm™	PVDF / Polyprel®	4FV	PE .375" O.D.
	465SI	1.8	Polypropylene	Ceramic	Fluorofilm™	PVDF / PTFE	4FV	PE .5" O.D.
	468SI	1.8	PVC/PVC	Ceramic	Fluorofilm™	PVDF / Polyprel®	4FV	PE .375" O.D.
	469SI	1.8	Acrylic/PVDF	PTFE	Fluorofilm™	PVDF / Polyprel®	4FV	PE .375" O.D.
	277	1.8	316 S.S.	316 S.S.	Fluorofilm™	316 S.S.		Pipe 1/4" NPT M
	75HV	1.8	Polypropylene	316 S.S.	Fluorofilm™	PTFE		PE .5" O.D.Vinyl .938" O.D.
	76HV	1.8	Acrylic / PP	316 S.S.	Fluorofilm™	Hypalon®		PE .5" O.D.Vinyl .938" O.D.
E73 ■ -	312SI#	3.0	PVDF / PVDF	Ceramic	Fluorofilm™	PVDF / Polyprel®	4FV	PE .5" O.D.
	313SI#	3.0	PVDF / PVDF	Ceramic	Fluorofilm™	PVDF / PTFE	4FV	PE .5" O.D.
	318SI#	3.0	PVC / PVC	Ceramic	Fluorofilm™	PVDF / Polyprel®	4FV	PE .5" O.D.
	410SI#	3.0	Acrylic / PVC	Ceramic	Fluorofilm™	PVDF / Polyprel®	4FV	PE .5" O.D.
	418SI#	3.0	PVC / PVC	Ceramic	Fluorofilm™	PVDF / Polyprel®	4FV	PE .5" O.D.
	419SI#	3.0	Acrylic/ PVDF	PTFE	Fluorofilm™	PVDF / Polyprel®	4FV	PE .5" O.D.
	20	3.0	Acrylic / PVC	Ceramic	Fluorofilm™	Hypalon®		PE .5" O.D. Vinyl .5" O.D.
	20HV	3.0	Acrylic / PP	316 S.S.	Fluorofilm™	Hypalon®		PE .5" O.D.Vinyl .938" O.D.
	20S	3.0	Acrylic / PVC	Ceramic	Fluorofilm™	Hypalon®	4FV	PE .5" O.D. Vinyl .5" O.D.
	24	3.0	PVC	Ceramic	Fluorofilm™	PTFE		Pipe 1/2" NPT M
	25HV	3.0	Polypropylene	316 S.S.	Fluorofilm™	PTFE		PE .5" O.D.Vinyl .938" O.D.
	25P	3.0	Polypropylene	Ceramic	Fluorofilm™	PTFE		Pipe 1/2" NPT M
	25T	3.0	Polypropylene	Ceramic	Fluorofilm™	PTFE		PE .5" O.D.
	26	3.0	PVC	Ceramic	Fluorofilm™	Viton®		PE .5" O.D.
	26S	3.0	PVC	Ceramic	Fluorofilm™	Viton®	4FV	PE .5" O.D.
	27	3.0	316 S.S.	316 S.S.	Fluorofilm™	PTFE		Pipe 1/2" NPT M
	29	3.0	UHMW PE	Ceramic	Fluorofilm™	Hypalon®		PE .5" O.D.
E74 ■ -	30	6.0	Acrylic / PVC	Ceramic	Fluorofilm™	PTFE		PE .5" O.D. Vinyl .5" O.D.
	34	6.0	PVC	Ceramic	Fluorofilm™	PTFE		Pipe 1/2" NPT M
	35P	6.0	Polypropylene	Ceramic	Fluorofilm™	PTFE		Pipe 1/2" NPT M
	35T	6.0	Polypropylene	Ceramic	Fluorofilm™	PTFE		PE .5" O.D.
	36	6.0	PVC	Ceramic	Fluorofilm™	PTFE		PE .5" O.D.
	37	6.0	316 S.S.	316 S.S.	Fluorofilm™	PTFE		Pipe 1/2" NPT M

- These liquid ends use 3/8" diameter valve balls. Pump output may be reduced in some applications.

NOTE: 1. Pumps are rated for: Class I, Division I, Groups C & D; Class II, Division I, Groups E, F, and G

■ See front page for voltage code specifications.

3FV indicates that the pump is equipped with an LMI Three Function Valve (pressure relief, priming aid, line drain). To specify 3FV, change "S" to "T".

4FV indicates that the pump is equipped with an LMI Four Function Valve. This diaphragm type anti-syphon/pressure relief valve is installed on the pump head. It provides anti-syphon protection and aids in priming, even under pressure.

Output Information

Series	Gallons per Hour Min	Gallons per Hour Max	Liters per Hour Min	Liters per Hour Max	mL/cc per Minute Min	mL/cc per Minute Max	mL/cc per Stroke Min	mL/cc per Stroke Max	Maximum Injection Pressure	
E70*	0.007	1.3	0.025	4.9	0.41	82	0.08	0.82	300 psi	(20.7 Bar)
E71*	0.013	2.5	0.048	9.5	0.79	158	0.16	1.58	150 psi	(10.3 Bar)
E72*	0.020	4.0	0.076	15.1	1.26	252	0.25	2.52	100 psi	(6.9 Bar)
E73*	0.040	8.0	0.151	30.0	2.52	505	0.50	5.05	60 psi	(4.1 Bar)
E74*	0.100	20.0	0.380	76.0	6.33	1267	1.27	12.67	25 psi	(1.7 Bar)

* Minimum output can be reduced to zero (0) when in external mode.

© 2009 Milton Roy Company - All Rights Reserved
Printed in USA - Specifications subject to change without notice.

Fluorofilm™ is a copolymer of PTFE and PFA.
Polyprel® is an elastomeric PTFE copolymer.

Polyprel is a registered trademark of Milton Roy Company. Fluorofilm and Liquifram are trademarks of Milton Roy Company. Hypalon, Viton are registered trademarks of E.I. du Pont de Nemours & Co., Inc.

Calibration Columns with Fixed Caps

MODEL #: 4000 ML

Drawing

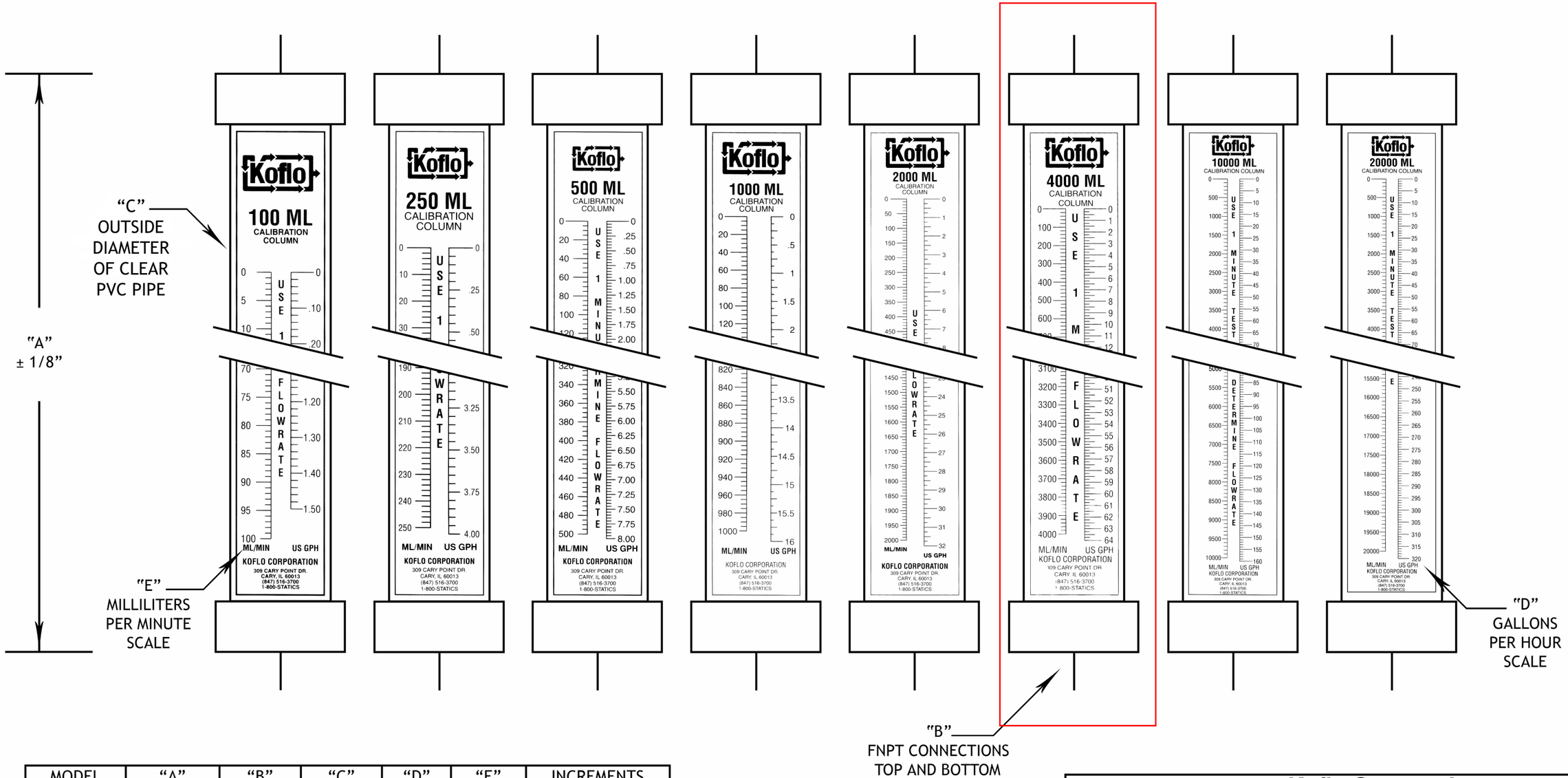

MODEL	"A"	"B"	"C"	"D"	"E"	INCREMENTS
100 ML	12-1/2"	1/2"	1.315"	1.5	100	1 ML /.02 GPH
250 ML	16-1/4"	1/2"	1.650"	4.0	250	2 ML / .05 GPH
500 ML	16"	3/4"	2.375"	8.0	500	5 ML / .05 GPH
1000 ML	25"	3/4"	2.375"	16.0	1000	5 ML / .125 GPH
2000 ML	24"	1"	3.500"	32.0	2000	10 ML / .25 GPH
4000 ML	34"	1"	4.000"	64.0	4000	20 ML / .25 GPH
10000 ML	27"	2"	6.625"	160.0	10,000	100 ML / 1 GPH
20000 ML	46"	2"	6.625"	320.0	20,000	100 ML / 1 GPH

NOTE: USE ONE (1) MINUTE TEST TO DETERMINE FLOWRATE

Koflo Corporation
309 CARY POINT DR.
CARY, IL 60013

SCALE: NONE	APPROVED BY	DRAWN BY N.J.F.
DATE: 2/6/07		REVISED 8/8/07
CUSTOMER:		REVISED 11/24/10
		REVISED
MODEL NO: PVC CALIBRATION COLUMNS WITH FIXED CAPS		DRAWING NUMBER KD-1032

PROPRIETARY DATA

PROPERTY OF ACE ROTO-MOLD MFG., INC. INFORMATION FURNISHED HEREIN IS THE PROPERTY OF ACE ROTO-MOLD MFG., INC.AND SHALL NOT BE USED, DISCLOSED TO OTHERS, OR COPIED WITHOUT THE EXPRESSED WRITTEN CONSENT OF ACE ROTO-MOLD MFG., INC. ALL RIGHTS RESERVED.

VT0550-52

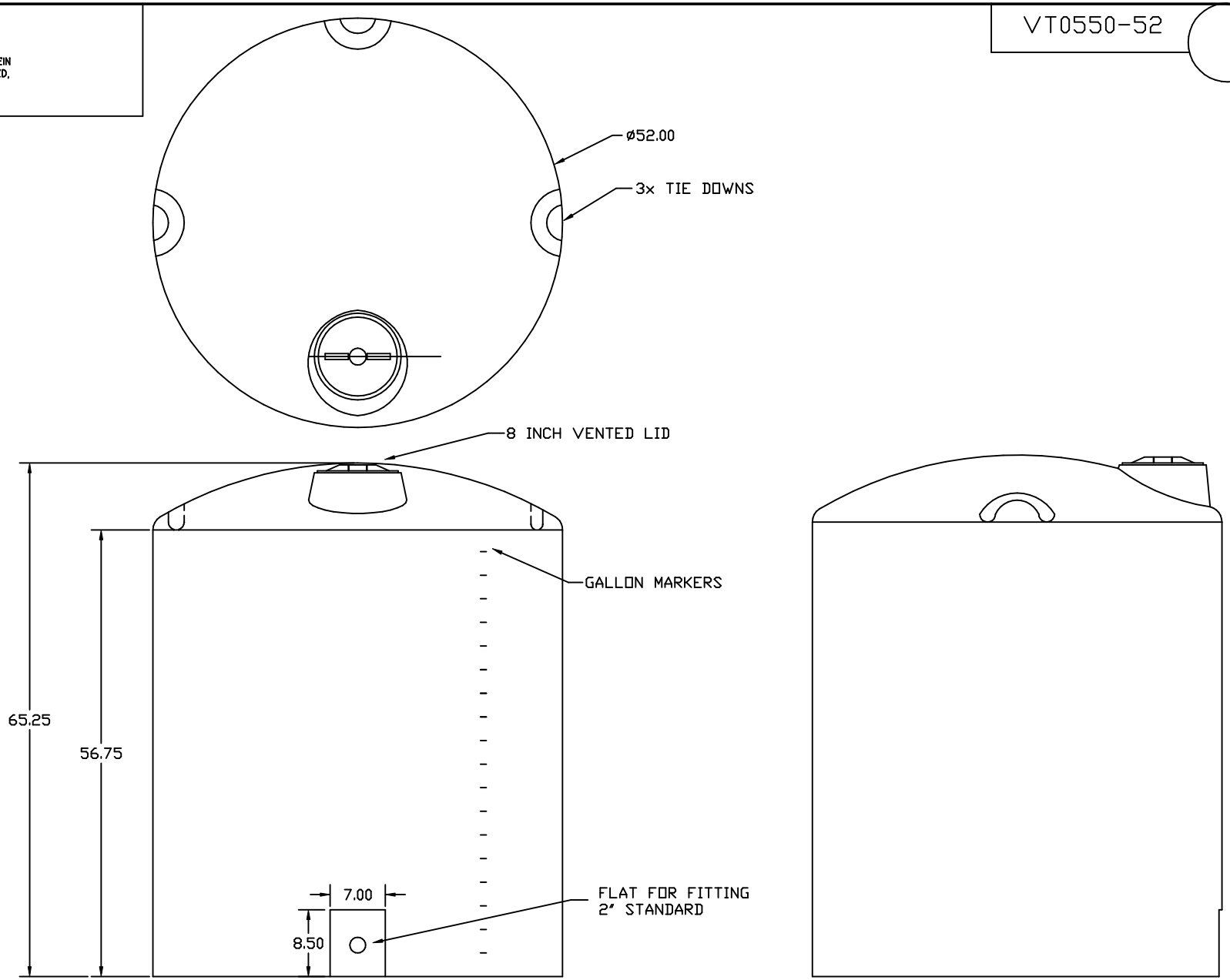

REV	DESCRIPTION	DATE APPRD.

ALL DIMENSIONS ARE IN DECIMAL INCHES
TOLERANCES UNLESS OTHERWISE SPECIFIED
±1% @ 68° F

DRAWN /DATE: DHJ 5/1/03

APPRD. /DATE: ADH 11/19/07

THIRD ANGLE PROJECTION
ANSI 14.5M

MATERIAL / SHOT WEIGHT: POLYETHYLINE 116 LBS.

NOTES: .25 NOM. WALL

Ace Roto-Mold
A DIVISION OF DEN HARTOG INDUSTRIES, INC.

CLIENT / DESCRIPTION: 550 GALLON VERTICAL

SCALE: NONE

PART NO.: VT0550-52

MODEL #: 2-40C-4-6-2

Clear PVC Static Mixers, Series 308

In response to a growing need for high quality PVC static mixers at a lower price, Koflo developed the Series 308 PVC Static Mixer. This unit is a clear PVC static mixer, which unlike other static mixers, allows for a visual inspection of the mixing process. All Series 308 static mixers are made in standard 6 element and 12 element configurations. Additionally, all PVC static mixers are edge sealed to the inside of the housing. The advantages of edge sealing are twofold. Not only does edge sealing increase mixing efficiency, but this bonding method also increases the structural integrity of the entire mixer. All mixers come standard with male NPT threads. Sizes 3/8"- 2" are in stock for immediate delivery.

One of the primary uses of the Series 308 static mixers is in the dilution of polymers and flocculants. With proper blending, it is quite common to recover the cost of a mixer in a relatively short period of time, due to the lower chemical costs associated with better mixing.

Other static mixer applications include

- Admixing of water treatment chemicals
- pH control
- Chlorination and ozonation
- Process control sampling

Technical Specifications

Model Number	Pipe Dia. MNPT Ends	Number of Elements	Length	Weight	Max. Working Pressure (PSI @ 75°F)	Typical Flow (GPM)	Pressure Loss (PSI)
3/8-40C-4-6-2	3/8"	6	6-1/2"	1.3 oz	310	.4 - 3	.25 - 11.25
3/8-40C-4-12-2	3/8"	12	11"	2.1 oz	310	.4 - 3	.50 - 22.5
1/2-40C-4-6-2	1/2"	6	7"	2.1 oz	300	.65 - 5	.25 - 10
1/2-40C-4-12-2	1/2"	12	12"	3.3 oz	300	.65 - 5	.50 - 20
3/4-40C-4-6-2	3/4"	6	9"	3.7 oz	240	1.5 - 12	.25 - 11
3/4-40C-4-12-2	3/4"	12	15"	5.8 oz	240	1.5 - 12	.50 - 22
1-40C-4-6-2	1"	6	11"	6.5 oz	220	2.5 - 16	.30 - 11.75
1-40C-4-12-2	1"	12	18"	9.9 oz	220	2.5 - 16	.60 - 23.5
1.25-40C-4-6-2	1-1/4"	6	14"	12.2 oz	180	4 - 32	.25 - 13.5
1.25-40C-4-12-2	1-1/4"	12	25"	18.3 oz	180	4 - 32	.50 - 27
1.5-40C-4-6-2	1-1/2"	6	15"	14.8 oz	170	6 - 40	.25 - 12.25
1.5-40C-4-12-2	1-1/2"	12	28"	25.4 oz	170	6 - 40	.50 - 24.5
2-40C-4-6-2	2"	6	19"	25 oz	140	9 - 60	.25 - 9.25
2-40C-4-12-2	2"	12	35"	43 oz	140	9 - 60	.50 - 18.5

© 2008 *Koflo Corporation 309 Cary Point Drive Cary, IL, 60013*
Phone 847-516-3700 | Fax 847-516-3724 | Toll Free 1-800-782-8427

MODEL #: 2-40C-4-6-2

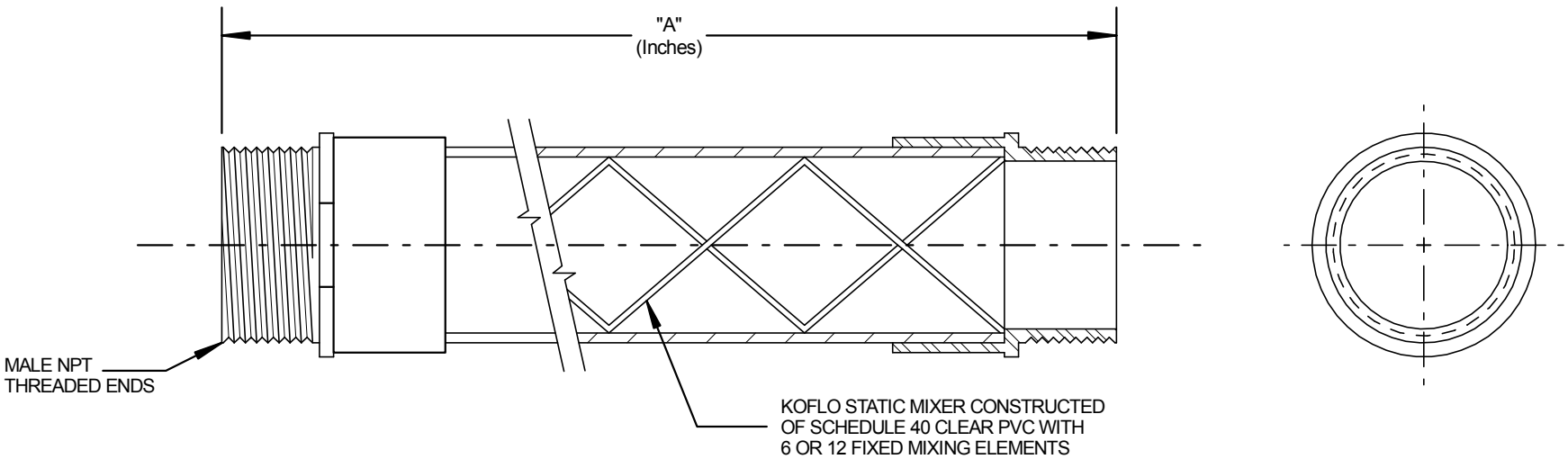

Size	6 Element Model Number	"A" 6 Element	12 Element Model Number	"A" 12 Element
3/8"	3/8-40C-4-6-2	6-1/2	3/8-40C-4-12-2	11
1/2"	1/2-40C-4-6-2	7	1/2-40C-4-12-2	12
3/4"	3/4-40C-4-6-2	9	3/4-40C-4-12-2	15
1"	1-40C-4-6-2	11	1-40C-4-12-2	18
1-1/4"	1.25-40C-4-6-2	14	1.25-40C-4-12-2	25
1-1/2"	1.5-40C-4-6-2	15	1.5-40C-4-12-2	28
2"	2-40C-4-6-2	19	2-40C-4-12-2	35

Koflo Corporation
309 CARY POINT DR.
CARY, IL 60013

SCALE: NONE	APPROVED BY JLF	DRAWN BY NJF	
DATE: 1/18/94		REVISED 10/15/01	
CUSTOMER:		REVISED 5/22/08	
		REVISED 6/12/09	
MODEL NO: CLEAR PVC SCHEDULE 40 MIXER		DRAWING NUMBER: KD-993	

Company name:
Created by:
Phone:

Date: 1/19/2017

Position	Count	Description
	1	**25S50-26** MODEL #: 05010026

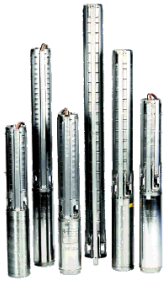

Product photo could vary from the actual product

Product No.: 05010026
Multi-stage submersible pump for raw water supply, groundwater lowering and pressure boosting. The pump is suitable for pumping clean, thin, non-agressive liquids without solid particles or fibers.

The pump is made entirely of Stainless steel DIN W.-Nr. DIN W.-Nr. 1.4301 and suitable for horizontal and vertical installation.
The pump is fitted with a built-in non-return valve.

Liquid:

Pumped liquid:	Water
Maximum liquid temperature:	104 °F
Liquid temp:	68 °F
Density:	62.29 lb/ft³

Technical:

Speed for pump data:	3450 rpm
Curve tolerance:	ISO9906:2012 3B

Materials:

Pump:	Stainless steel DIN W.-Nr. 1.4301 AISI 304
Impeller:	Stainless steel DIN W.-Nr. 1.4301 AISI 304

Installation:

Pump outlet:	1 1/2"NPT
Motor diameter:	4 inch

Electrical data:

Power (P2) required by pump:	5.498 HP

Others:

Net weight:	16.1 lb
Gross weight:	18.1 lb

MODEL #: 5SQE10-410

Company name: PexUniverse.com
Created by: PexUniverse.com
Phone: 800-818-3201
Fax: 800-818-3211
Date: 01/01/2011

Description	Value
Product name:	5 SQE10-410
Product Number:	96160180
EAN number:	5700398712794
Technical:	
Speed for pump data	10700 rpm
Rated flow:	4.4 US gpm
Rated head:	469 ft
Approvals on nameplate:	UL, cUL
Approvals on motor nameplate:	CE,UL,CUL
Pump Number:	96397408
Stages:	9
Model:	B
Valve:	pump with built-in non-return valve
Materials:	
Pump:	Polyethylene / Stainless steel DIN W.-Nr. 1.4301
Motor:	Stainless steel DIN W.-Nr. 1.4301 AISI 304
Installation:	
Pump outlet:	NPT 1
Minimum borehole diameter:	2.99 in
Liquid:	
Maximum liquid temperature:	95 °F
Max liquid temperature at 0.15 m/sec	95 °F
Electrical data:	
Motor type:	MSE3
Power input - P1:	2.32 kW
Rated power - P2:	2.25 HP
Main frequency:	60 Hz
Rated voltage:	1 x 200-240 V
Start. method:	direct-on-line
Service factor:	2,25
Rated current:	11.2 A
Power factor:	1,00
Rated speed:	10700 rpm
Enclosure class (IEC 34-5):	58
Insulation class (IEC 85):	F
Motor protection:	Y
Thermal protec:	internal
Length of cable:	4.92 ft
Motor Number:	96160541
Controls:	
CU 300/CU 301:	communication with CU 300/CU 301 possible
Others:	
Sales region:	Namreg

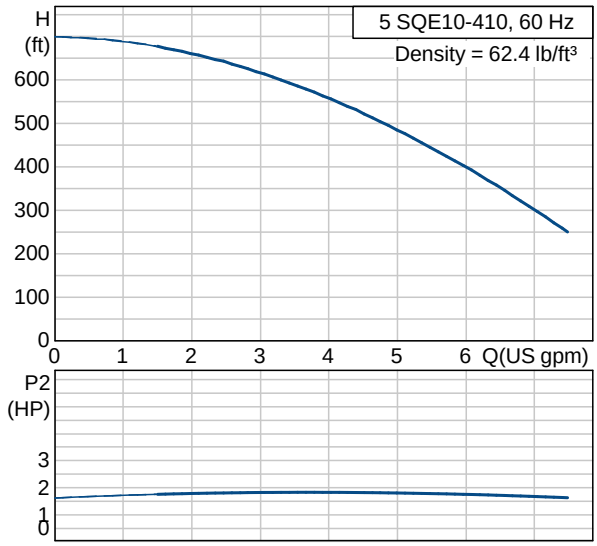

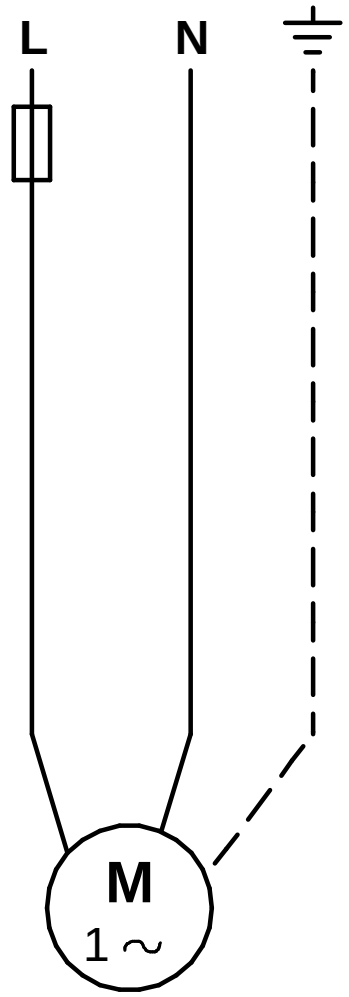

MODEL #: 20' DRY CONTAINER

(800) 506 - 7368

SPECIFICATIONS

Typical ISO (International Standards Organization) shipping containers are manufactured with identical size specification in terms of exterior height, exterior width, and exterior length. The standardization of containers and the adoption of the ISO specification is to insure that all equipment handlers, chassis, rail cars, and slot spaces on vessels will accommodate ALL containers. This makes our job much easier, because we can confidently give you exact exterior specifications. Interior specifications can be slightly different, less then 1″ variation. These ISO containers are now available in all major metropolitan areas throughout the nation. Shipping containers as storage units have changed the storage industry, most people prefer the convenience of mobile storage vs. standard mini storage. Container Solutions has formed a network of small businesses that are familiar with your needs. This guide is designed to help you become informed about container uses, common questions and problems.

Typical Dimensions

	Exterior			Interior			Door Opening	
	Length	Width	Height	Length	Width	Height	Width	Height
10′ Standard Dry Container	10′	8′	8′6″	9′3″	7′8″	7′ 9 7/8″	7′8″	7′5″
20′ Standard Dry Container	20′	8′	8′6″	19′3″	7′8″	7′ 9 7/8″	7′8″	7′5″
40′ Standard Dry Container	40′	8′	8′6″	39′ 5″	7′8″	7′ 9 7/8″	7′8″	7′5″
40′ High Cube Dry Container	40′	8′	9′6″	39′ 5″	7′8″	8′ 10″	7′8″	8′ 5 1/2″
45′ High Cube Dry Container	45′	8′	9′6″	44′ 5″	7′8″	8′ 10″	7′8″	8′ 5 1/2″
20′ Refrigerated Container	19′ 10.5″	8′	8′6″	17′ 11″	7′6″	7′6″*	7”5″	7′3″
40′ Refrigerated Container	40′	8′	8′6″	37′ 11″	7′6″	7′6″*	7”6″	7′6″
40′ High Cube Refrigerated Container	40′	8′	9′6″	37′ 11″	7′6″	8′4″*	7”6″	8′4″

Typical Weights / Capacity

	Cubic Capacity	Tare Weight	Max Gross	Max Payload
20′ Standard Dry Container	1,165 cu. ft.	5,050	67,200	62,150
40′ Standard Dry Container	2,350 cu. ft.	8,000	67,200	59,200
40′ High Cube Dry Container	2694 cu. ft.	8,775	67,200	58,425
45′ High Cube Dry Container	3043 cu. ft.	9,810	72,800	62,990
20′ Refrigerated Container	1,010 cu. ft. (967)**	6,503	52,800	46,407
40′ Refrigerated Container	2,051 cu. ft. (1959)**	9,700	67,200	57,450

Search

RECENT POSTS

The Best Pop-Up Shipping Container Shops

Utilizing Shipping Containers to Expand Your Business

What Size Shipping Container Do I Need?

Shipping Container Sustainability

How to Choose a Container

CATEGORIES

About Containers

Blog

Creative Uses

Product: Custom FRP Insulated Equipment Vault
Project Name: Hartzell Construction
Project Number: 42128
Manufactured By: Virtual Polymer Compounds, LLC
Date: 7/5/2016
Revision: original

PRODUCT SPECIFICATION 01 33 00
CUSTOM FRP VAULT

PART ONE -GENERAL INFORMATION

1.01 Furnish one fiberglass composite enclosure that measures 48” height x 72” in width x 48” in depth with hinged lid.

1.02 Typical Product Performance Design:
A. The structure will be designed for 130 mph wind load when correctly installed.
B. The unit is designed to handle live roof loads of 50 pounds per square foot.

1.03 Submittals:
A. Comply with General Conditions of Project Documents (see attached)
B. Product data to include:
1. Type, Product Name and Resin Manufacturer
2. Test results of fiberglass laminate used.
C. Shop Drawing showing all critical dimensions of Enclosure
D. Shop Drawing showing location and plan of all Enclosure options
E. Complete off loading, storage and installation instructions

PART TWO: PRODUCT

2.01 Products:
A. Provide CUSTOM Shelter as manufactured by Virtual Polymer Compounds, LLC of 10478 Ridge Road, Medina NY 14103; Tel. (585) 735-9668.

2.02 Material of Construction:
A. Gel Coat: All exposed surfaces will be smooth with a 20 mil polyester based gel coat. Color of the gel coat is FIR GREEN.
B. Structural laminate will be nominal 3/8 inch thick. The laminate will include 3/8 inch glass fiber reinforced laminate under 20 mils of gel coat.
C. The material will meet the following standards:

1. Tensile Strength	ASTM D 638	14,000 psi
2. Flexural Strength	ASTM D 790	25,000 psi
3. Flexural Modulus	ASTM D 790	1,000,000 psi
4. Impact, Notched	ASTM D 256	10 ft-lbs/1
5. Barcol Hardness	ASTM D 2583	40
6. High Temperature Limit		150 F

7. Chemical Resistance ANSI/AWWA F10 Type II

2.03 Method of Construction: Single piece contact molded fiberglass reinforced plastic.

2.04 Metallic mounting and door hardware is to be 18-8 stainless steel.

2.05 The Enclosure is to include the following standard options:
A. Provide unit with hinged lid.
B. Stainless Steel hinges and eye bolt for hasp.
C. Stainless steel pull handle.
D. 1 3/4 inch interior base mounting flange.

PART THREE: EXECUTION

3.01 Carefully remove structure from original crating only at the time of installation. Examine the unit completely and report any damage to the unit prior to installation.

3.02 Verify that the dimensions of the concrete slab (foundation) designated for installation are correct and suitable for installation. Report any anticipated problems at once.

3.03 Installation:
A. Ensure the structure is set plum, true and level.
B. Fasten to foundation using specified fasteners at specified spacing.
C. Connect to power from protected circuit.

<<<< End of Section >>>>

PVC & CPVC DOUBLE CONTAINMENT SYSTEMS

DC-2-1206

Double Containment Made Simple!

Simplified Design, Easier Installation, Lower Overall Cost

Spears® Double Containment (DC) Fittings are constructed from standard fittings that are to be assembled on the jobsite. Spears® DC fittings work with standard pipe for both Carrier and Containment lines. Standard DC fitting configurations include Tees, Access Tees, Elbows, Couplings, Dog-Bone Couplers, Termination & Closure Fittings, and Pipe Centralizers. Plus supplemental equipment such as Clamp-on Saddles for Sensors, Expansion Joints, and In-line Valve Boxes assembled with Spears® quality Industrial Ball Valve, Ball Check or Diaphragm Valves. See Catalog publication DC-1, Double Containment, for pricing and installation information.

• Spears® Floating Carrier System Design

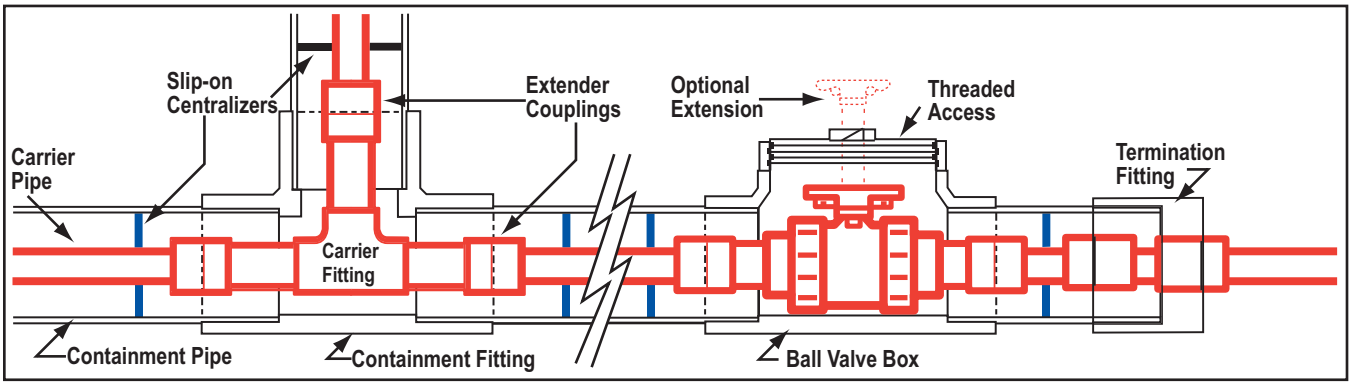

Carrier fittings are equipped with special extender couplings for connection to carrier pipe. Simple, slip-on centralizer brackets used on the carrier pipe support this assembly inside the containment pipe. This design allows the carrier fitting to "float" within the containment fitting, allowing ease of movement for installation while reducing problems associated with thermal expansion and contraction during operation.

• Full Size Range for Virtually Any Application

Carrier x Containment Sizes 1/2x2, 3/4x3, 1x3, 1-1/2x4, 2x4, 3x6, 4x8, 6x10, 8x12, plus additional sizes on request.

• PVC & CPVC Carrier/Containment Combination Configured to Order

Select any combination of carrier and containment pipe/fittings from PVC Sch 40, PVC Clear Sch 40, PVC Sch 80, CPVC Sch 80.

• Full Service Pressure Rating

Spears® Double Containment carrier pipe and fittings are suitable for full Sch 40 or Sch 80 pressure applications, except where limited by addition of valves, saddles and other system components with lower pressure ratings. Secondary containment rated at 10 psi unless otherwise specified.

MADE IN THE U.S.A. WITH PRIDE

PROGRESSIVE PRODUCTS FROM SPEARS® INNOVATION & TECHNOLOGY

Visit our web site: www.spearsmfg.com

LOSS PREVENTION CERTIFICATION BOARD LPCB

UKAS QUALITY MANAGEMENT 007

Quality Systems Certificate No. 293
Corporate Facilities, Sylmar, CA
Assessed to ISO 9001: 2000

Spears® Double Containment . . .Designed for Simplicity!

• Easy, Slip-on Centralizer Brackets

Simple, slip-on design centralizes carrier pipe and fittings in containment pipe. Allows free movement of components and provides necessary space for routing of leak detection cables.

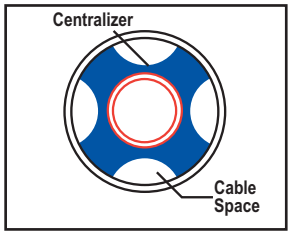

• Quick Glue-and-Connect Closure Fittings

Special fittings designed for final closure of containment pipe features glue-wiping seal to improve distribution of solvent cement during assembly. After assembly of carrier connection, simply solvent cement pipe and closure fitting and slide assembly together. Wiping seals assures spread of cement for proper bond.

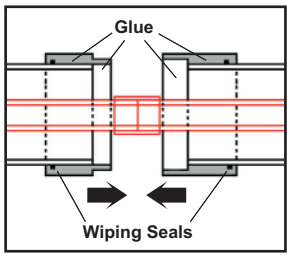

• Carrier & Containment Expansion Joints

Temperature differentials can produce significant expansion and contraction changes between carrier pipe and containment pipe. These forces can severely damage system integrity. In addition to Spears® floating carrier design, Spears® in-line expansion joints can be used on either carrier or containment runs to compensate for expansion and contraction changes.

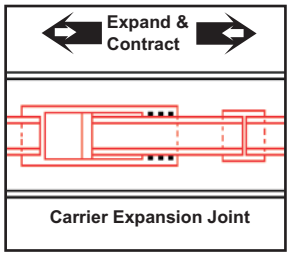

• In-Line Valve Boxes

Spears® unique containment enclosure of Valves provides easy access while allowing for addition of valve operation extensions or mechanical actuation. Special "Tee-style" configuration easily connects to containment system, minimizes space requirements and strengthens overall system integrity.

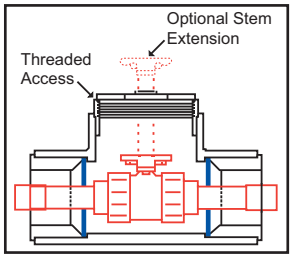

• Sensor Saddles

Easy-to-install threaded saddle tees can be easily located anywhere along containment pipe for mounting user-supplied leak detection sensors. Saddle tee forms low-point reservior for detection of any fluid in the containment system. Select either Clamp-on style (for up to 6" pipe) or Glue-on style (for up to 8" and larger pipe).

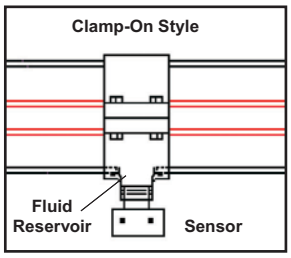

Contact Spears® for Complete Double Containment Custom Quotation

Not For Use With Compressed Air Or Gases

SPEARS® MANUFACTURING COMPANY
CORPORATE OFFICE
15853 Olden St., Sylmar, CA 91342 • PO Box 9203, Sylmar, CA 91392
(818) 364-1611 • www.spearsmfg.com

MADE IN THE U.S.A. WITH PRIDE

© Copyright 2008 Spears® Manufacturing Company. All Rights Reserved. Printed in the United States of America 03/08.

Kirtland Air Force Base

Sold to: CB&I Federal Services

Operation & Maintenance Manual
For Downhole Flow Control Valve

By Baski, Inc.

Invoice# 11968

Serial Number 28861

December 20, 2016

Baski, Inc. Flow Control Valve (FCV™) 11968

Kirtland Air Force Base

(Sold to CB&I Federal Services)
Baski, Inc. Flow Control Valve (FCV™) 11968
InFlex™ USA Pat. 5,316,081; 6,273,195

Stretch pressure for this valve, Serial # 28861 is 130 psi.
Valve drawing injection_11968.dwg

Driving head H is the sum of the injection pipeline pressure, plus the distance down to the injection water level in the well (feet of water converted to a pressure), minus the head loss in the column pipe. For injection flow the relationship between the flow rate "Q" in gpm, and the driving head "H" through the valve is expressed by the equation $Q = C_v \times \sqrt{H}$. When the valve is all the way open, the value C_v is 8 gpm /$\sqrt{foot\ water}$ or 12 gpm /$\sqrt{psi}$.

The Baski Flow Control Valve (FCV™) regulates recharge injection flow into wells. This FCV™ is a unique application of an inflatable rubber element, special passageways, and a downhole gas-over-liquid reservoir for inflation. Full inflation of the element seals off recharge flow into the well; and will allow water to be pumped to the surface if there is a well pump below the FCV™. In most cases, a downhole check valve is recommended for use with the well pump. Partial inflation of the element creates an annular area between the outside diameter of the internal orifice column and the inside diameter of the element for flow of water back into the well. This annular area can be adjusted to provide varying amounts of head loss across the valve to control the injection rate, which prevents injected water from cavitating through the column pipe. For applications involving only the injection of water, and no pumping, the threaded bottom of the FCV™ must be capped off.

The liquid inflation reservoir within the FCV™ prevents gas from contacting the rubber element, and, therefore, the risk of decompression blistering of the element is eliminated. To operate properly, this FCV™ has been filled with a nontoxic antifreeze with silicone oil on top to prevent evaporation. The fill level is 2.0" from the face of the top head when the valve is in the vertical position.

THIS VALVE IS FILLED WITH LIQUID. DO NOT ATTACH THE ACTUATION LINE TO THE FCV™ UNLESS THE FCV™ IS IN THE VERTICAL POSITION WITH THE INFLATION ACCESS PORTS ON TOP, OR FLUID MAY LEAK OUT OF THE FCV™. SAVE THE CAPS WHICH PREVENT LEAKAGE DURING SHIPMENT.
Failure to use caps during shipping may result in leakage.

INSTALLATION
Read all instructions before installation.

There are no user serviceable parts in the FCV™. No attempt should be made to disassemble the valve. Only the factory is capable of repairing the valve. Because there is fluid in the FCV™, care should be taken not to introduce contaminants into the FCV™. For storage the ends and injection exit ports should be closed off with black plastic sheeting or equivalent. This eliminates sunlight, and the exchange of air, significantly reducing the three enemies of natural rubber: ozone, oxygen and ultraviolet radiation. Remove any such sheeting before assembly into the column piping.

The Baski Flow Control Valve typically has threaded connections and requires no specialized equipment for attaching in-line with the column piping. The Flow Control Valve (FCV™) is made with threads to match the column pipe being used. For vertical turbine installations, the length of the valve is made the same as the length of column pipe, which is normally 10 feet. The joint strength of the FCV™ exceeds that of the column pipe.

Further installation involves the control lines. Normally, 1/4" OD Duplex 2205 stainless steel tubing is used. The stainless tubing requires a tubing cutter for stainless steel tubing and standard open end (English) wrenches. The inside diameter of the tubing, where cut, should be opened up to its full diameter. Banding, if provided, requires a C-001 Junior Band-It banding Tool. Hydraulic hose may also be used in place of the stainless tubing, and may require special tools for installation.

All fittings at the FCV™ should be tested with nitrogen gas for leaks before going into the hole. The FCV™ should be in the vertical position. Remove the caps from the control line tubing fittings on the FCV™. The caps should be saved. If the FCV™ is taken out of the well, the caps should be reattached so the liquid in the FCV™ doesn't spill onto the ground or equipment. Fluid level may be checked by putting a wire or wooden skewer through the tubing fitting and noting insertion depth, and level indicated on dip stick. **Do not use a wire smaller in diameter than 1/8".** The fill level of the FCV™ is stamped on the top head, and appears as (for instance) "F5", indicating the level is 5" down from the surface of the top head when the FCV™ is in the vertical position. The stainless lines are attached at the FCV™. Stainless control tubing supplied by Baski for the control lines of the FCV™ already have the Swagelok nut and ferrule set assembled and pre-tightened. To remake, use a wrench, and when the nut starts to tighten up, go an additional 1/16th turn. Installation of new ferrules requires tightening of 1-3/4 turns.

The other end of the stainless line is accessible at the wooden spool upon which the stainless line is wound. Attach a Swagelok body with a coupling on the NPT thread or connect directly to a control panel. This end is used for pressurizing with nitrogen to check for leaks at the top of the FCV™. All fittings should be saved, along with the caps that hold the fluid in the FCV™ for shipping, or for future use.

Pressurize the FCV™ to 400 psi. Snoop, a Swagelok product, or a soapy water solution can be sprayed onto the connections at the FCV™ to make bubbles visible, which would indicate leakage. Simulate vibration of the stainless line by jiggling the line. Hold at this pressure for 30 minutes and continue looking for any bubbles using Snoop. Any fitting that leaks, as indicated by bubbles, should be tightened another 1/16th turn. If the leak continues (this would be a rare occurrence), the fitting should be replaced. The fitting should be removed; thread sealant and any oils must be removed from the female NPT thread; and a new fitting installed with thread sealant. Repeat the above procedure for leak testing. After connection of the control lines to the FCV™ control panel, those fittings should also be checked for leaks.

During the pressure test, it is important to remember that temperature affects pressure. If you start the pressure test and the weather changes, the pressure in the FCV and tubing will change as well. If the temperature drops or the sun goes behind clouds, the pressure in the tubing will drop even though there are not any leaks. On the other hand, if the temperature rises, the pressure will also rise. When pressure testing at 400 psi, the pressure in the tubing and FCV will change roughly 0.75 psi per one degree (F) change in temperature up or down.

When the pressure test is complete, the pressure should be released, and the back side of the tubing disconnected from the nitrogen regulator. Put either the original fittings or tubing caps back onto the back end of the tubing to prevent dirt or debris from getting into the tubing during installation. Continue with installation of the column pipe, using stainless steel banding to secure the tubing to the column pipe. It is recommended that the tubing be secured in the middle of each column pipe section, or more if needed. Vertical turbine or injection-only installations may include over-the-coupling protectors to cover the tubing over each coupling. In applications with submersible pumps, no over-the coupling protectors are needed, as the pump cable will protect the stainless tubing.

Note: For installations with two control lines, both lines access the same chamber inside of the FCV, so you do not need to keep track of which line came from which port during installation, as both lines function identically.

Excessive chlorine injection may corrode stainless tubing. In such cases, a suitable hose product should be substituted. After installation, any chlorine solution used to sanitize equipment going into the well should be less than 200 ppm chlorine. Following sanitizing, the equipment should be rinsed off. This can be done by adding water to the annulus between the casing ID and the column piping OD; and by pumping water out of the well, until chlorine levels are less than about 1 ppm.

VALVE ADJUSTMENT FOR PUMPING

Stretch pressure for this valve, Serial # 28861 is 130 psi.

Pumping is defined as water being pumped by a well pump from below ground to surface piping. This process is also referred to as production. For pumping, the FCV™ must be closed. The pressure to close the valve is the shutoff pressure, and is equal to the sum of the set depth (converted to psi), plus the column pipe friction loss, plus the uphole pumping pressure, plus the stretch pressure of the valve. The pumping pressure may not always be known in advance, but may be estimated. **For example**, if the Flow Control Valve is set at 400 feet, and the pumping pressure at the surface is estimated to be 40 psi, and the column pipe friction loss is ignored, the minimum inflation pressure would be 400 ÷ 2.31 + 40 + 30 = 243 psi. (2.31 feet of water equals 1 psi). If the inflation pressure is increased to 255 psi, and there is an increase in flow (as seen by observation of the flow meter), then there must have been some leakage past the valve, going back into the well, at 243 psi. When an increase in inflation pressure no longer gives an increase in flow rate, there is no leakage past the valve.

If there is no pressure in the FCV and the pump is turned on, the water will only be circulated in the casing around the pump and motor. If left for very long, the temperature of the water will rise, and can become hot enough to destroy seals in the pump and the FCV.

VALVE ADJUSTMENT FOR INJECTION

Stretch pressure for this valve, Serial 28861 is 130 psi.

For recharge injection into the well, the pump is turned off and the element is partially deflated to control the injection rate as monitored by the injection water meter. The shut off inflation pressure of the valve is slightly less than the sum of the surface injection pressure, plus the FCV™ set depth converted to psi, plus the stretch pressure of the valve, minus the column pipe friction loss. **For example**, if the injection pressure is 25 psi, and the set depth is 400 feet, and we ignore the head loss in the column pipe, a pressure of 25 + 400 ÷ 2.31 + 30 (228 psi) would shut off injection flow: hence, to inject, the pressure must be less than this. The range of pressures for injection would be between 0 (zero) and 228 psi. For operation of the control valve after the pump has been turned off, the nitrogen gas is bled off, reducing the pressure in the valve so that the water flows through the valve and into the well. The flow rate is adjusted through the control valve by varying the inflation pressure to the valve, while monitoring the flow rate with the flow meter. It may take several hours for the flow rate to stabilize due to the stabilization of the injection water level. There is a slight hysteresis effect due to the reinforced rubber element, but it is normally a much shorter time variable than the water level stabilization variable. For increasing the flow rate, the valve inflation pressure would be reduced, but after several hours the flow rates may be slightly higher or lower, and the valve inflation pressure would have to be adjusted to compensate for this. When decreasing flow, the valve inflation would be increased; but after several hours the valve inflation may have to be slightly adjusted up or down to obtain the desired flow.

COLUMN PIPE FRICTION LOSS

There are a variety of methods for estimating friction loss in piping. The following formula is given as the Hazen and Williams empirical formula[1]. The column pipe friction loss (in feet of water) for a given length L of pipe (in feet) is:

$$10.44 * L * \left(\frac{Q}{c * ID^{2.63}}\right)^{1.85}$$

Where L is in feet of pipe, Q is in gpm, and ID is the inside diameter (ID) of the pipe in inches. The constant "c" is used to estimate the pipe conditions: 140 is used for very smooth pipe ID's; 100 for average pipe ID smoothness; and 40 for very corroded, rough pipe ID's.

For friction loss in psi, replace the constant 10.44 with 4.5195.

The formula is good for 65 °F water. Water temperature extremes (freezing - boiling) can vary the results ±40%.

[1]Cameron Hydraulic Data, by Ingersoll-Dresser Pumps, 1996, Liberty Corner, NJ, p3-7
Hydraulic Tables, William and Hazen, Wiley and Sons, Inc., 1965

Preventative Maintenance, overhaul, parts
There are no user serviceable parts in this FCV™. No attempt should be made to disassemble the valve. Only the factory is capable of repairing the valve. Because there is liquid in the FCV™, care should be taken not to introduce contaminants into the FCV™. The metal parts of the valve are 316 stainless steel. The liquid is a nontoxic antifreeze (propylene glycol) with a silicone oil layer on top to prevent evaporation.

The Flow Control Valve requires no maintenance. Care must be taken, however, to avoid leakage of the fluid out of the valve during handling. The valve is shipped with a cap over the inflation tubing fitting on the valve. This should be saved. When the valve is pulled out of the well, this cap should be reattached to prevent valve fluid from leaking out when the valve is laid in the horizontal position. Care should also be taken so as not to damage the inflation fittings installed in the ports at the top of the valve. There are no spare parts available for the valve. The inflation fittings are Swagelok, part number SS-400-1-4. However, the ports in the valve are 1/4" NPT and any suitable fitting for the control lines used may be installed in the ports.

For storage the ends and injection exit ports should be closed off with black plastic sheeting or equivalent. This eliminates sunlight, and the exchange of air, significantly reducing the three enemies of natural rubber: ozone, oxygen and ultraviolet radiation.

Original makeup of Swagelok tubing nuts (silver) are tightened to 1-1/4 turns past finger tight. Stainless control tubing supplied by Baski for the control lines of the FCV™ already have the Swagelok nut and ferrule set assembled. To remake, use a wrench, and when the nut starts to tighten up, go an additional 1/16th turn.

The fill level of the FCV™ is stamped on the top head, and appears as (for instance) "F5", indicating the level is 5" down from the surface of the top head when the FCV™ is in the vertical position.

NOTES

Pressure gauges should be operated in the first 2/3 of their range. The proper accuracy should be chosen for expected inflation pressures. For example, a 0 to 800 psi pressure gauge can be used to 600 psi inflation pressure. If the gauge is 1/2% accurate to full range, that means it is ±(800 x 0.005 =) 4 psi. **For example**, when the pressure gauge reads 330 psi, the actual pressure would be somewhere between 326 and 334 psi. If the gauge were a 5% gauge, the pressure might be between 290 and 370 psi. This is too great a range, and a more accurate gauge, such as the 1/2% should be chosen.

Nitrogen gas is recommended for pressurizing the FCV™.

Baski, Inc. Flow Control Valve[1] (FCV™) Panel

The Flow Control Valve (FCV™) Panel allows for pressurizing or bleeding the nitrogen from the FCV™ control lines, as well as adding or removing the liquid from the FCV™ inflation chamber. Pressurization or bleeding may be manual or automatic. The manual pressurization and bleeding of the FCV™ utilizes standard needle valves. The automatic pressurization and bleeding makes use of solenoid valves actuated by a programmable logic controller (PLC) (not supplied by Baski). To obtain the desired injection flow rate, the PLC/SCADA systems typically monitor: 1) the injection rate; 2) the FCV™ pressure; 3) injection pipeline pressure (a vacuum or negative pressure must be avoided to prevent possible contamination); 4) well water level; and 5) tank storage or reservoir levels. The FCV™ pressure may be monitored via the transducer pressure port on the upper right manifold block of the panel. The rate of pressurization or bleeding is regulated by metering valves downstream of the (normally closed) solenoid valves. Note: These metering valves cannot shut off flow. A pressure transmitter may be used at the inlet port of the panel, and another one on the cylinder side of the pressure regulator, to trigger a warning signal at low cylinder pressure.

DO NOT OVER TIGHTEN THE METERING VALVES,
THEY CANNOT SHUT OFF FLOW.

Attachment of the panel
The control panel may be mounted to a wall, or placed in a standard NEMA enclosure that takes the same back panel size.

Hookup
Electrical leads of solenoid valves should be terminated by the electrical contractor adjacent to the valve panel, per national electric codes.

A nitrogen regulator is attached to a cylinder and a line run to the panel. The regulator should not be set to deliver more than 600 psi (except Deep Set™ valves). The manual pressurization valve should be closed, and the (normally closed) solenoid valves should not be powered up. The delivery pressure may now be set on the regulator. A pressure relief valve on the lower block may be set to prevent over-pressurization of the FCV™ should the regulator malfunction.

A tube, with a discharge muffler, should be attached to the bleed discharge and routed to a point out of the way of personnel. High pressure nitrogen gas can come out of this port, and care must be taken to prevent injury to personnel and prevent nitrogen concentration from building up in an enclosed or confined space.

The FCV™ is installed with two control lines (1/4" OD stainless steel tubing). The lines may be attached to the FCV™ ports, and to the Control Line ports of the panel.

The FCV™ comes with inflation liquid already installed. Normal pressurization and bleeding of the valve requires that shutoff valve 1 and shutoff valve 2 be open, and the fill/drain valve be closed. When pressurizing the valve, the manual bleed valve should be closed; and when bleeding off pressure from the valve, the manual pressurization valve should be closed. Long inflation lines may require longer times for pressure changes to reach the valve. If the pressurization valve is opened, and then closed, the pressure gauge will slowly rise and then fall to a value which represents the pressure in the valve.

Shutoff valve 1 and shutoff valve 2, and the fill/drain valve, may all be closed to change the pressure gauge without depressurizing the FCV™. The C_v for a Baski Flow Control Valve (FCV™) can be decreased by adding liquid to the control lines. The C_v can later be restored by removing the added liquid. To add liquid, pump liquid in the fill/drain valve (open), with shutoff valves 1 and 2 closed, and the line to the FCV™ at shutoff valve 1 disconnected. To gas lift liquid out of the valve, add gas through shutoff valve 1, with shutoff valve 2 closed and the fill/drain valve open. **Consult the factory before adding or removing any liquid to/from the FCV™.**

Original makeup of Swagelok tubing nuts (silver colored) are tightened to 1-1/4 turns past finger tight. Stainless control tubing supplied by Baski for the control line of the FCV™ typically already has the Swagelok nut and ferrule set assembled. To remake, use a wrench, and when the nut starts to tighten up, go an additional 1/16th turn. Hose and tubing supplied by Baski have fittings at both ends. The stainless steel tubing control line fittings are Swagelok, part number SS-400-1-6. However, the ports in the valve are 3/8" NPT and any suitable fitting for the control lines used may be installed in the ports. Hose fittings are a standard size 4 by 37 degree flare.

Preventative Maintenance, Overhaul, Parts

1	2	[ea]	metering valve	SS-4MG2-MH
2	2	[ea]	solenoid valve	71215SN2ENOONO-C111P3 (120VAC)
3	5	[ea]	shutoff valves	B-1KF-4
4	11	[ea]	tubing connectors	SS-400-1-4 (Swagelok straight male connector)
5	2	[ea]	tubing connectors	SS-400-7-4 (Swagelok straight female connector)
6	2	[ea]	tubing connectors	SS-400-1-6 (Swagelok straight male connector)
7	1	[ea]	filter	1A483
8	1	[ea]	relief valve & cap	B-4CPA2-350 -P-4CP4-K12-RD
9	1	[ea]	gauge	1279-400

The manual-only panel does not have items 1 & 2 from the above table.

Ports for control line are 1/4" female NPT. Stainless tubing requires stainless steel straight male connectors. Item 6 above is for stainless control line. This item would be changed for control line utilizing hose. Hose requires a 1/4" male NPT by #4-37° flare adapter. Other adapters may be substituted for different control lines.

The Flow Control Valve panel requires no regular maintenance. All connections must be clean before assembly. If the filter must be replaced, care must be taken so that dirt does not enter the system while the filter is being replaced. If a leak occurs at one of the connections between the aluminum blocks (except for the pressure gauge and relief valve), the block that has the connection must be removed. We do not recommend that this be done in the field, but, rather, that the panel be returned to the factory. If such a leak occurs, call Baski, Inc. Technical Services at 1.800.55.BASKI. The shutoff valves have packing around the stems. If there is a leak through the stem of the knob of the valve, the packing may be retightened. There are two nuts on the valve. Loosen the lower nut closest to the body of the valve, and tighten the upper nut until the leak stops, then retighten the lower nut. The metering valve must never be over tightened: it cannot shut off flow. Leakage through the solenoid valve may be field repairable: call Baski, Inc. Technical Services at 1.800.55.BASKI. The filter and pressure gauge are the most common spare parts required by the panel. Replacement of the pressure gauge may require removal of the backpanel from the wall. Call Baski, Inc. Technical Services at 1.800.55.BASKI before attempting to replace the gauge.

Leak Check
Before the valve is lowered into the well, the connections on top of the valve should be checked for leaks. Refer to the section on installation of the FCV™.

Only personnel familiar with high pressure cylinder gases should be allowed to make connections to the panel or nitrogen cylinder.

After connection of the valve to the panel and the regulator to the panel, the panel should be tested for leaks.

1. The lower four shutoff valves should be closed, and the shutoff valve to the left of the gauge should be opened. Pressurize the panel to 200 psi. All connections to the aluminum blocks, and between the blocks should be inspected for leaks. This includes the packing at the stem of the shutoff valves. Also, remove the red protective diffusion cap off the pressure relief valve and check to make sure the relief valve is not leaking. Soapy water, or other suitable leak detection fluids or methods may be employed to assure there are no leaks at the NPT connection or the tube connection.

   A slight leak at an NPT fitting may be able to be fixed by loosening the tubing nut and tightening the body of the tubing connector into the aluminum block, and retightening the tubing nut. A slight leak at the nut may be able to be fixed by tightening the nut slightly. Do not over tighten connections.

   If there are no leaks, the regulator pressure may be backed off and the panel depressurized by opening the shutoff valve for high pressure gas bleed (lower left of the panel). After the pressure in the panel has returned to zero, close the shutoff valve.

2. Open the two shutoff valves for the two control lines of the Flow Control Valve. Pressurize the panel (and Flow Control Valve) to 200 psi. Check for leaks at the two fittings where the stainless control lines enter the panel. Check for leaks at the fittings for the lower center shutoff valve on the bottom aluminum block. The high pressure gas bleed port at the bottom of the panel should have a vent tube attached, to direct bleed gases to a safe area. Check the end of this tube for gas leaking by the solenoid valves. If this is not possible, disconnect the tube, attach another short tube, then put the end of the tube in water and look for bubbles.

3. Now close the shutoff valve just to the left of the pressure gauge and turn the regulator handle counterclockwise to relieve pressure. The panel and Flow Control Valve are now pressurized, and may be left that way for 1 to 2 hours to check for leaks. If there is a leak now, it may be due to a damaged control line <u>in</u> the well. The damage probably occurred during installation. The hose may be detached at the regulator and put in water to see if the back pressure on the PRESSURIZE solenoid is leaking back through the solenoid valve. If there appear to be no leaks at the surface, the valve probably has a damaged control line in the well.

Trouble shooting Flow Control Valve (FCV™) and Panel Operation
The FCV™ is a simple operational valve. Depressurized, the FCV™ is in the open position and pumped water will flow back into the well. Pumping requires the proper shutoff pressure. This shutoff pressure is calculated by the methods stated in the operational instructions. If there is no flow to the surface during pumping, and there is sufficient pressure in the system, then the control line may be smashed closed: i.e., the valve was installed with zero pressure, and the line damaged during installation. There is also the unlikely event that pumping is possible even though the pressure in the FCV™ has been released: the valve sent down pressurized and the lines smashed closed.

A pressure lower than the shutoff pressure will allow injection of water into the well. Zero pressure at the wellhead may indicate cavitation of the water in the well. An increase in pressure in the FCV™ should raise the surface pressure above zero.

A clogged filter can create problems. To check for a clogged filter close the lower four shutoff valves. An increase in pressure at the regulator should be immediately recorded at the gauge on the panel. If the panel gauge is sluggish in response to the regulator, the filter is probably clogged. The regulator may be backed off and the panel may be depressurized (opening the bleed valve) and the sensitivity checked several times.

Other problems are uncommon and the factory should be consulted call Baski, Inc. Technical Services at 1.800.55.BASKI.

Mechanical Safety, Pump Shutdown
A snap action pressure switch (SPDT) may be hooked in series with the (emergency) stop switch of the pump's magnetic starter, so that loss of pressure in the FCV™ turns the pump off, bypassing any computer system. If the FCV™ is open for recharge, and the pump is on, the water will recirculate between the well and the FCV™. As a result of this, the well temperature will increase, possibly high enough to destroy pump and FCV™ seals. Without endorsing the brand, Dwyer Industries' Mercoid Series A1 or A1PS pressure switch is a possible candidate for this application. Dwyer is located in Michigan City, Indiana. A licensed electrical contractor can complete the wiring. This unit may be installed external the panel with a mounting bracket.

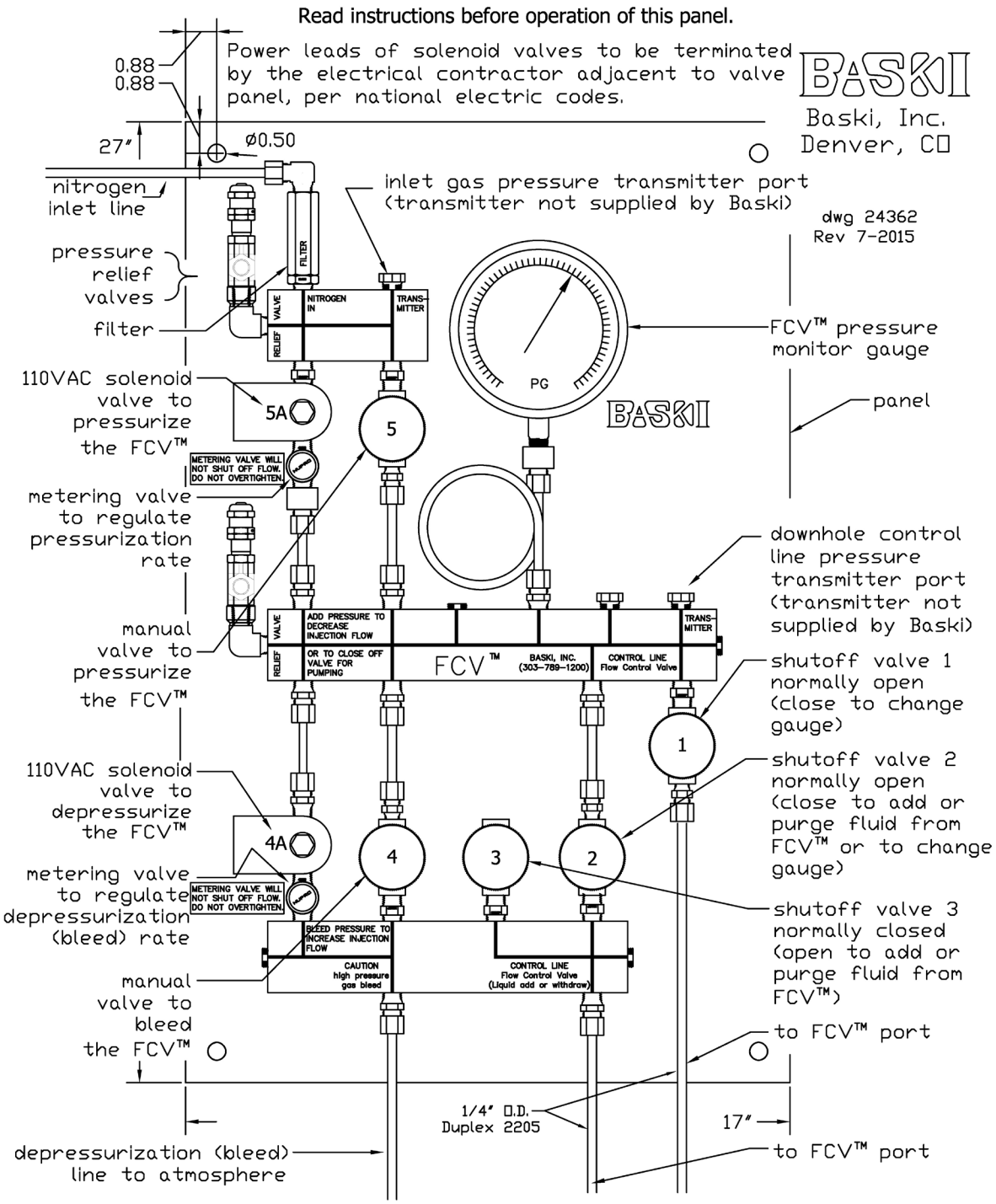
Read instructions before operation of this panel.
Power leads of solenoid valves to be terminated by the electrical contractor adjacent to valve panel, per national electric codes.
BASKI
Baski, Inc.
Denver, CO
0.88
0.88
27"
ø0.50
nitrogen inlet line
inlet gas pressure transmitter port (transmitter not supplied by Baski)
dwg 24362
Rev 7-2015
pressure relief valves
filter
FILTER
VALVE
RELIEF
NITROGEN IN
TRANS-MITTER
FCV™ pressure monitor gauge
PG
panel
110VAC solenoid valve to pressurize the FCV™
5A
5
METERING VALVE WILL NOT SHUT OFF FLOW. DO NOT OVERTIGHTEN.
metering valve to regulate pressurization rate
downhole control line pressure transmitter port (transmitter not supplied by Baski)
manual valve to pressurize the FCV™
ADD PRESSURE TO DECREASE INJECTION FLOW
OR TO CLOSE OFF VALVE FOR PUMPING
FCV™
BASKI, INC. (303-789-1200)
CONTROL LINE Flow Control Valve
shutoff valve 1 normally open (close to change gauge)
1
110VAC solenoid valve to depressurize the FCV™
4A
4
3
2
shutoff valve 2 normally open (close to add or purge fluid from FCV™ or to change gauge)
metering valve to regulate depressurization (bleed) rate
shutoff valve 3 normally closed (open to add or purge fluid from FCV™)
BLEED PRESSURE TO INCREASE INJECTION FLOW
CAUTION high pressure gas bleed
CONTROL LINE Flow Control Valve (Liquid add or withdraw)
manual valve to bleed the FCV™
to FCV™ port
1/4" O.D. Duplex 2205
17"
depressurization (bleed) line to atmosphere
to FCV™ port

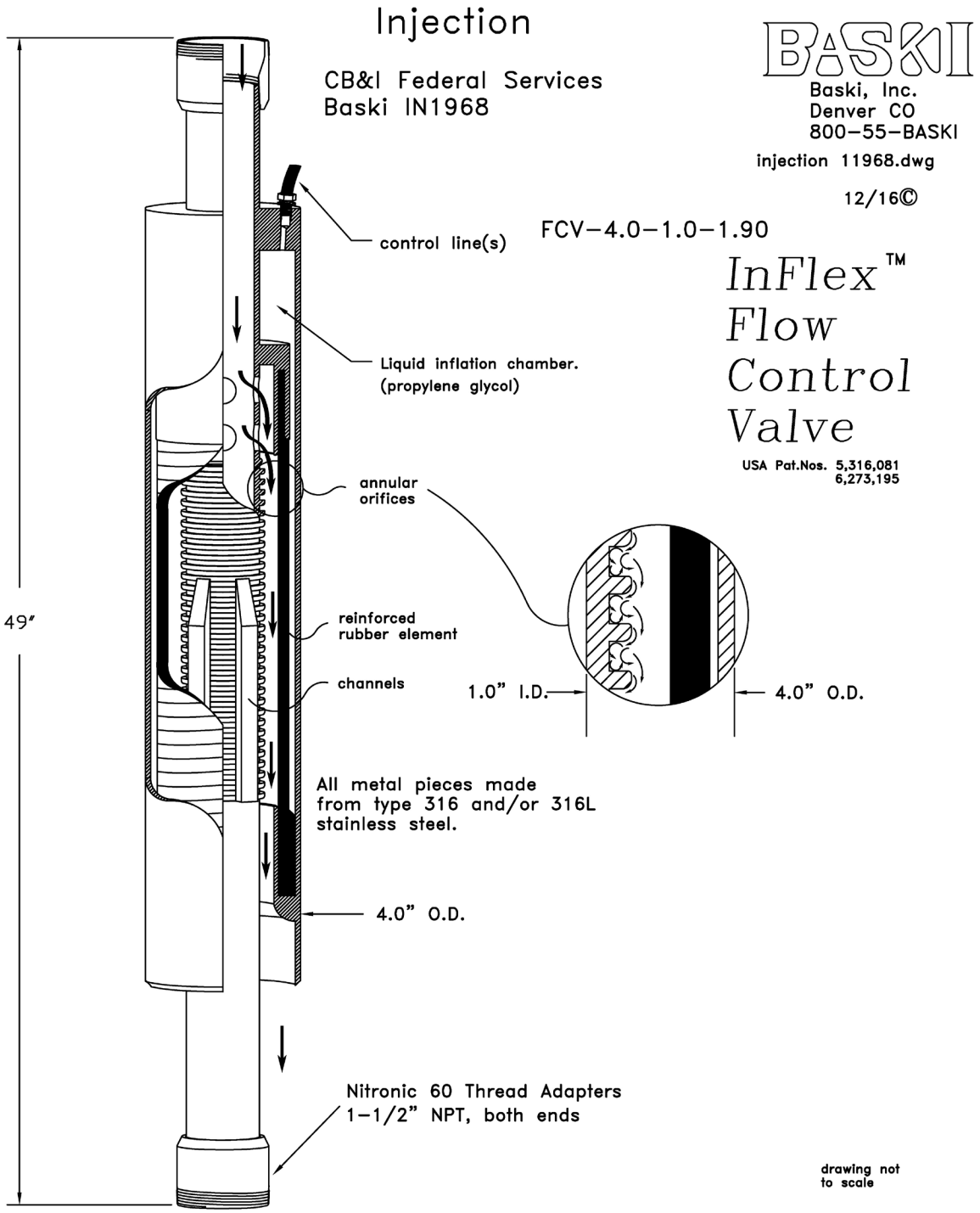
Injection
CB&I Federal Services
Baski IN1968
BASKI
Baski, Inc.
Denver CO
800-55-BASKI
injection 11968.dwg
12/16©
FCV-4.0-1.0-1.90
InFlex™
Flow
Control
Valve
USA Pat.Nos. 5,316,081
6,273,195
control line(s)
Liquid inflation chamber.
(propylene glycol)
annular
orifices
reinforced
rubber element
channels
1.0" I.D.
4.0" O.D.
49"
All metal pieces made
from type 316 and/or 316L
stainless steel.
4.0" O.D.
Nitronic 60 Thread Adapters
1-1/2" NPT, both ends
drawing not
to scale

Sample Collection Log

500433 KAFB Rapid Response ESTCP – Groundwater, Baseline

Location Code KAFB-106MWII

RFA/COC Number 500433EDBPT-GW006

Sample Number 106MWII-BL-091817

Collection Date 9/18/17

Sampling Method Low Flow

Collection Time 1140

Sample Type Grab

Start Depth 513

QC Code Normal

End Depth 523

Sampling Equipment Bladder Pump

Sample Matrix GW

QC Partners None

Sample Team A, TK

Containers:

Analytical Suite	Filtered	Qty	Size	Container Type	Preservative	Lab
EDB by 8011	NA	2	40 mL	VOA Vials	None	Empirical
VOCs by 8260	NA	3	40 mL	VOA Vials	HCl	Empirical
hosphate by SM4500 PE	NA	1	250 mL	Poly Bottle	H2SO4	Empirical
solved Fe and Mn by 6010	Yes	1	250 mL	Poly Bottle	HNO3	Empirical
alinity by SM2320B	NA	1	250 mL	Poly Bottle	None	Empirical
ns (Chloride, Sulfate, ide, and nitrate/nitrite s N) by EPA 9056						
odide by EPA 300	NA	1	100 mL	Poly Bottle	None	Test America
educed Gases by SOP-175/EPA 3810	NA	2	40 mL	VOA Vials	HCl	CB&I
FA by EPA 300m	NA	2	40 mL	VOA Vials	None	CB&I
~~uantArray-Chlor~~	~~NA~~	~~1~~	~~1 L~~	~~Poly Bottle~~	~~None~~	~~Microbial Insights~~
Fluorescein	NA	1	20 mL	VOA Vials	None	Crawford
rogen/H2O Isotope Ratio	NA	1	60 mL	VOA Vials	None	USGS
~~EDB CSIA~~	~~NA~~	~~2~~	~~1 L~~	~~Amber Bottle~~	~~HCl~~	~~University of Oklahom~~

Comments/Descriptions:

Cannot measure DTW at 3" intermediate well. Recollection of Baseline

Logged By/Date: [signature] 9/18/17

Reviewed By/Date:

Sample Collection Log

500433 KAFB Rapid Response ESTCP – Groundwater, Baseline

Location Code KAFB-106MW1S

RFA/COC Number S00433EDBPT-GW007

Sample Number 106MW1S-BL-091917

Collection Date 9/19/17

Sampling Method low flow

Collection Time 1512

Sample Type Grab

Start Depth 463

QC Code normal

End Depth 498

Sampling Equipment bladder pump

Sample Matrix GW

QC Partners N/A

Sample Team TK, CL

Containers:

Analytical Suite	Filtered	Qty	Size	Container Type	Preservative	Lab
EDB by 8011	NA	2	40 mL	VOA Vials	None	Empirical
VOCs by 8260	NA	3	40 mL	VOA Vials	HCl	Empirical
Nitrate by EPA 353.2	NA	1	250 mL	Poly Bottle	H2SO4	Empirical
O-Phosphate by SM4500 PE	Yes	1	250 mL	Poly Bottle	None	Empirical
Dissolved Fe and Mn by 6010	Yes	1	250 mL	Poly Bottle	HNO3	Empirical
Alkalinity by SM2320B Anions (Chloride, Sulfate, Bromide) by EPA 300	NA	1	250 mL	Poly Bottle	None	Empirical
Iodide by EPA 300	NA	1	100 mL	Poly Bottle	None	Test America
Reduced Gases by RSKSOP-175/EPA 3810	NA	2	40 mL	VOA Vials	HCl	CB&I
VFA by EPA 300m	NA	2	40 mL	VOA Vials	None	CB&I
QuantArray-Chlor	NA	1	1 L	Poly Bottle	None	Microbial Insights
Fluorescein	NA	1	20 mL	VOA Vial	None	Crawford
Hydrogen/H2O Isotope Ratio	NA	1	60 mL	Glass Bottle	None	USGS
EDB CSIA	NA	2	1 L	Amber Bottle	HCl	University of Oklahom

Comments/Descriptions.

Recollection of baseline event.
product ~ 0.24 ft.

Logged By/Date: 9/19/17

Reviewed By/Date: 9/19/17

Sample Collection Log

500433 KAFB Rapid Response ESTCP – Groundwater, Baseline

Location Code KAFB-106MW2-I

RFA/COC Number 500433EDBPT-GW007

Sample Number 106MW2I-BL-091917

Collection Date 9/19/17

Sampling Method Low Flow

Collection Time 1337

Sample Type Grab

Start Depth 513

QC Code Normal

End Depth 523

Sampling Equipment bladder pump

Sample Matrix GW

QC Partners 106MW2I-BL-FD-~~10~~ 091917

Sample Team CL, TK

Containers:

Analytical Suite	Filtered	Qty	Size	Container Type	Preservative	Lab
EDB by 8011	NA	2	40 mL	VOA Vials	None	Empirical
VOCs by 8260	NA	3	40 mL	VOA Vials	HCl	Empirical
O-Phosphate by SM4500 PE	NA	1	250 mL	Poly Bottle	H2SO4	Empirical
Dissolved Fe and Mn by 6010	Yes	1	250 mL	Poly Bottle	HNO3	Empirical
Alkalinity by SM2320B Anions (Chloride, Sulfate, Bromide, and nitrate/nitrite as N) by EPA 9056	NA	1	250 mL	Poly Bottle	None	Empirical
Iodide by EPA 300	NA	1	100 mL	Poly Bottle	None	Test America
Reduced Gases by RSKSOP-175/EPA 3810	NA	2	40 mL	VOA Vials	HCl	CB&I
VFA by EPA 300m	NA	2	40 mL	VOA Vials	None	CB&I
~~TSK QuantArray-Chlor~~	~~NA~~	~~1~~	~~1 L~~	~~Poly Bottle~~	~~None~~	~~Microbial Insights~~
Fluorescein	NA	1	20 mL	VOA Vials	None	Crawford
Hydrogen/H2O Isotope Ratio	NA	1	60 mL	VOA Vials	None	USGS
~~TSK EDB GSIA~~	~~NA~~	~~2~~	~~1 L~~	~~Amber Bottle~~	~~HCl~~	~~University of Oklahom~~

Comments/Descriptions.

Recollection of baseline. Can't direct measure water level, 3-inch well too small with dedicated pump.

Logged By/Date: [signature] 9/19/17

Reviewed By/Date: [signature] 9/19/17

Sample Collection Log

500433 KAFB Rapid Response ESTCP – Groundwater, Baseline

Location Code KAFB-106MW2-S

RFA/CCC Number 500433EDBPT-GW007

Sample Number 106MW2S-BL-091917

Collection Date 9/19/17

Sampling Method Low Flow

Collection Time 1225

Sample Type Grab

Start Depth 463

QC Code Normal

End Depth 498

Sampling Equipment Bladder Pump

Sample Matrix GW

QC Partners N/A

Sample Team CL, TK

Containers:

Analytical Suite	Filtered	Qty	Size	Container Type	Preservative	Lab
EDB by 8011	NA	2	40 mL	VOA Vials	None	Empirical
VOCs by 8260	NA	3	40 mL	VOA Vials	HCl	Empirical
O-Phosphate by SM4500 PE	NA	1	250 mL	Poly Bottle	H2SO4	Empirical
Dissolved Fe and Mn by 6010	Yes	1	250 mL	Poly Bottle	HNO3	Empirical
Alkalinity by SM2320B Anions (Chloride, Sulfate, Bromide, and nitrate/nitrite as N) by EPA 9056	NA	1	250 mL	Poly Bottle	None	Empirical
Iodide by EPA 300	NA	1	100 mL	Poly Bottle	None	Test America
Reduced Gases by RSKSOP-175/EPA 3810	NA	2	40 mL	VOA Vials	HCl	CB&I
VFA by EPA 300m	NA	2	40 mL	VOA Vials	None	CB&I
~~QuantArray-Chlor~~	~~NA~~	~~1~~	~~1 L~~	~~Poly Bottle~~	~~None~~	~~Microbial Insights~~
Fluorescein	NA	1	20 mL	VOA Vials	None	Crawford
Hydrogen/H2O Isotope Ratio	NA	1	60 mL	VOA Vials	None	USGS
EDB CSIA	NA	2	1 L	Amber Bottle	HCl	University of Oklahom

Comments/Descriptions.

Unable to measure water level. Probe gets hung up @ about 180ft.
Purge water is yellowish w/ rust flakes; fuel odor.
Recollection of Baseline.

Logged By/Date: [signature] 9/19/17

Reviewed By/Date: [signature] 9/19/17

Sample Collection Log

500433 KAFB Rapid Response ESTCP – Groundwater, Baseline

Location Code KAFB-1060163

RFA/COC Number 500433EDBPT-GW0006

Sample Number 060163-BL-091817

Collection Date 9/18/17

Sampling Method Low Flow

Collection Time 1309

Sample Type Grab

Start Depth 508

QC Code Normal

End Depth 523

Sampling Equipment Bladder Pump

Sample Matrix GW

QC Partners NA

Sample Team a, JK

Containers:

Analytical Suite	Filtered	Qty	Size	Container Type	Preservative	Lab
EDB by 8011	NA	2	40 mL	VOA Vials	None	Empirical
VOCs by 8260	NA	3	40 mL	VOA Vials	HCl	Empirical
O-Phosphate by SM4500 PE	NA	1	250 mL	Poly Bottle	H2SO4	Empirical
Dissolved Fe and Mn by 6010	Yes	1	250 mL	Poly Bottle	HNO3	Empirical
Alkalinity by SM2320B Anions (Chloride, Sulfate, Bromide, and nitrate/nitrite as N) by EPA 9056	NA	1	250 mL	Poly Bottle	None	Empirical
Iodide by EPA 300	NA	1	100 mL	Poly Bottle	None	Test America
Reduced Gases by RSKSOP-175/EPA 3810	NA	2	40 mL	VOA Vials	HCl	CB&I
VFA by EPA 300m	NA	2	40 mL	VOA Vials	None	CB&I
CL ~~QuantArray-Chlor~~	~~NA~~	~~1~~	~~1 L~~	~~Poly Bottle~~	~~None~~	~~Microbial Insights~~
Fluorescein	NA	1	20 mL	VOA Vials	None	Crawford
Hydrogen/H2O Isotope Ratio	NA	1	60 mL	Jar ~~VOA Vials~~	None	USGS
a ~~EDB CSIA~~	~~NA~~	~~2~~	~~1 L~~	~~Amber Bottle~~	~~HCl~~	~~University of Oklahom~~

Comments/Descriptions:

DTW = 480.24 ft btoc. Recollect Baseline

Small bubbles in tubing and YSI.

Logged By/Date: [signature] 9/18/17

Reviewed By/Date: _____

Sample Collection Log

500433 KAFB Rapid Response ESTCP – Groundwater, Baseline

Location Code KAFB-106EX2

RFA/COC Number 500433-EDBPT-GW00

Sample Number 106EX2-BL-092617

Collection Date 9/26/17

Sampling Method dedicated pump

Collection Time 1257

Sample Type grab

Start Depth 487

QC Code normal

End Depth 502

Sampling Equipment Grundfos pump, disposable sample equipment

Sample Matrix GW

QC Partners normal

Sample Team TK, CC

Containers:

Analytical Suite	Filtered	Qty	Size	Container Type	Preservative	Lab
EDB by 8011	NA	2	40 mL	VOA Vials	None	Empirical
VOCs by 8260	NA	3	40 mL	VOA Vials	HCl	Empirical
Nitrate by EPA 353.2	NA	1	250 mL	Poly Bottle	H2SO4	Empirical
O-Phosphate by SM4500 PE	Yes	1	250 mL	Poly Bottle	None	Empirical
Dissolved Fe and Mn by 6010	Yes	1	250 mL	Poly Bottle	HNO3	Empirical
Alkalinity by SM2320B Anions (Chloride, Sulfate, Bromide) by EPA 300	NA	1	250 mL	Poly Bottle	None	Empirical
Iodide by EPA 300	NA	1	100 mL	Poly Bottle	None	Test America
Reduced Gases by RSKSOP-175/EPA 3810	NA	2	40 mL	VOA Vials	HCl	CB&I
VFA by EPA 300m	NA	2	40 mL	VOA Vials	None	CB&I
TSK ~~QuantArray-Chlor~~	~~NA~~	~~1~~	~~1 L~~	~~Poly Bottle~~	~~None~~	~~Microbial Insights~~
Fluorescein	NA	1	20 mL	VOA Vial	None	Crawford
Hydrogen/H2O Isotope Ratio	NA	1	60 mL	Glass Bottle	None	USGS
EDB CSIA	NA	2	1 L	Amber Bottle	HCl	University of Oklahom

Comments/Descriptions:

2nd baseline event, a few small bubbles in VOAs

Logged By/Date: [signature] 9/26/17

Reviewed By/Date: _____

Sample Collection Log

500433 KAFB Rapid Response ESTCP – Groundwater, Baseline

Location Code KAFB-106EX1

RFA/COC Number 500433EDBPT-GW00

Sample Number 106EX1-BL-092617

Collection Date 09/26/17

Sampling Method dedicated pump

Collection Time 1218

Sample Type grab

Start Depth 487

QC Code normal

End Depth 502

Sampling Equipment Grundfos pump, disposable sample equipment

Sample Matrix GW

QC Partners N/A

Sample Team TK, CL

Containers:

Analytical Suite	Filtered	Qty	Size	Container Type	Preservative	Lab
EDB by 8011	NA	2	40 mL	VOA Vials	None	Empirical
VOCs by 8260	NA	3	40 mL	VOA Vials	HCl	Empirical
Nitrate by EPA 353.2	NA	1	250 mL	Poly Bottle	H2SO4	Empirical
O-Phosphate by SM4500 PE	Yes	1	250 mL	Poly Bottle	None	Empirical
Dissolved Fe and Mn by 6010	Yes	1	250 mL	Poly Bottle	HNO3	Empirical
Alkalinity by SM2320B Anions (Chloride, Sulfate, Bromide) by EPA 300	NA	1	250 mL	Poly Bottle	None	Empirical
Iodide by EPA 300	NA	1	100 mL	Poly Bottle	None	Test America
Reduced Gases by RSKSOP-175/EPA 3810	NA	2	40 mL	VOA Vials	HCl	CB&I
VFA by EPA 300m	NA	2	40 mL	VOA Vials	None	CB&I
~~TSK QuantArray-Chlor~~	~~NA~~	~~1~~	~~1 L~~	~~Poly Bottle~~	~~None~~	~~Microbial Insights~~
Fluorescein	NA	1	20 mL	VOA Vial	None	Crawford
Hydrogen/H2O Isotope Ratio	NA	1	60 mL	Glass Bottle	None	USGS
EDB CSIA	NA	2	1 L	Amber Bottle	HCl	University of Oklahom

Comments/Descriptions: 2nd baseline event, small bubbles in sample line and VOAs

Logged By/Date: [signature] 9/26/17

Reviewed By/Date: _____

Sample Collection Log

500433 KAFB Rapid Response ESTCP – Groundwater, Baseline

Location Code KAFB-106IN1

RFA/COC Number 500433EDBPT-GW00

Sample Number 106IN1-BL-092617

Collection Date 09/26/17

Sampling Method dedicated pump

Collection Time 1105

Sample Type grab

Start Depth 477

QC Code normal

End Depth 497

Sampling Equipment Grundfos pump, disposable sample equipment

Sample Matrix GW

QC Partners N/A

Sample Team TK, CL

Containers:

Analytical Suite	Filtered	Qty	Size	Container Type	Preservative	Lab
EDB by 8011	NA	2	40 mL	VOA Vials	None	Empirical
VOCs by 8260	NA	3	40 mL	VOA Vials	HCl	Empirical
Nitrate by EPA 353.2	NA	1	250 mL	Poly Bottle	H2SO4	Empirical
O-Phosphate by SM4500 PE	Yes	1	250 mL	Poly Bottle	None	Empirical
Dissolved Fe and Mn by 6010	Yes	1	250 mL	Poly Bottle	HNO3	Empirical
Alkalinity by SM2320B Anions (Chloride, Sulfate, Bromide) by EPA 300	NA	1	250 mL	Poly Bottle	None	Empirical
Iodide by EPA 300	NA	1	100 mL	Poly Bottle	None	Test America
Reduced Gases by RSKSOP-175/EPA 3810	NA	2	40 mL	VOA Vials	HCl	CB&I
VFA by EPA 300m	NA	2	40 mL	VOA Vials	None	CB&I
~~+5K QuantArray-Chlor~~	~~NA~~	~~1~~	~~1 L~~	~~Poly Bottle~~	~~None~~	~~Microbial Insights~~
Fluorescein	NA	1	20 mL	VOA Vial	None	Crawford
Hydrogen/H2O Isotope Ratio	NA	1	60 mL	Glass Bottle	None	USGS
EDB CSIA	NA	2	1 L	Amber Bottle	HCl	University of Oklahom

Comments/Descriptions:

2nd baseline event

Logged By/Date: [signature] 9/26/17

Reviewed By/Date:

Sample Collection Log

500433 KAFB Rapid Response ESTCP – Groundwater, Phase I, Recirculation, Day-0

Location Code KAFB-106IN1

RFA/COC Number S00453EDBPT-GW 009

Sample Number 106IN1-PIR-100217-2

Collection Date 10/2/17

Sampling Method Sample port

Collection Time 1642

Sample Type Grab

Start Depth NA

QC Code Normal

End Depth NA

Sampling Equipment Tubing, Port

Sample Matrix GW

QC Partners N/A

Sample Team CL, TK

Containers:

Analytical Suite	Filtered	Qty	Size	Container Type	Preservative	Lab
Fluorescein	NA	1	20 mL	VOA Vial	None	Crawford
Hydrogen/H2O Isotope Ratio	NA	1	60 mL	Glass Jar	None	USGS

Comments/Descriptions:

Second sample collected from IN1 after introduction of dye and deuterated water. Dye test started @ 1211. This sample is not part of the pilot test sample regimine.

Logged By/Date: 10/2/17

Reviewed By/Date: _____

Sample Collection Log

500433 KAFB Rapid Response ESTCP – Groundwater, Phase I, Recirculation, Day 0

Location Code KAFB-1061N1

Sample Number 1061N1-P1R-100217-1

Sampling Method Sample port

Sample Type Grab

QC Code Normal

Sampling Equipment Tubing, Port

QC Partners N/A

RFA/COC Number 500433EDBPT-GW009

Collection Date 10/2/17

Collection Time 1342

Start Depth NA

End Depth NA

Sample Matrix GW

Sample Team A, TK

Containers:

Analytical Suite	Filtered	Qty	Size	Container Type	Preservative	Lab
Fluorescein	NA	1	20 mL	VOA Vial	None	Crawford
Hydrogen/H2O Isotope Ratio	NA	1	60 mL	Glass Jar	None	USGS

Comments/Descriptions: Sample collected after dye and deuterium introduced to injection well. Dye test started at 1211
Not part of pilot test sample regimine.

Logged By/Date: 10/2/17

Reviewed By/Date:

Sample Collection Log

500433 KAFB Rapid Response ESTCP – Groundwater, Phase I, Recirculation

Location Code KAFB-106IN1

Sample Number 106IN1-P1R-100317-3

Sampling Method Sample Port

Sample Type Grab

QC Code Normal

Sampling Equipment Tubing, Port

QC Partners N/A

RFA/COC Number 500433EDBPT-GW009

Collection Date 10/3/17

Collection Time 0820

Start Depth —

End Depth —

Sample Matrix GW

Sample Team CL, TK

Containers:

Analytical Suite	Filtered	Qty	Size	Container Type	Preservative	Lab
Fluorescein	NA	1	20 mL	VOA Vials	None	Crawford
Hydrogen/H2O Isotope Ratio	NA	1	60 mL	VOA Vials	None	USGS

Comments/Descriptions:

3rd Sample collected from 106IN1 after start of dye/deuterium test on 10/2/17 @ 1211. This sample is not part of the pilot study sample regime. Fluorometer field reading: 107.0 relative fluorescence units compared to calibration standard.

Logged By/Date: [signature] 10/3/17

Reviewed By/Date: _____

Sample Collection Log

500433 KAFB Rapid Response ESTCP – Groundwater, Phase I, Recirculation

Location Code KAFB-106EX1

Sample Number 106EX1-P1R-100417

Sampling Method Sample

Sample Type Grab

QC Code Normal

Sampling Equipment Sample port, tubing

QC Partners None

RFA/COC Number 500433EDBPT-GW009

Collection Date 10/4/17

Collection Time 1553

Start Depth 487

End Depth 502

Sample Matrix GW

Sample Team CV, TK

Containers:

Analytical Suite	Filtered	Qty	Size	Container Type	Preservative	Lab
Fluorescein	NA	1	20 mL	VOA Vial	None	Crawford
Hydrogen/H2O Isotope Ratio	NA	1	60 mL	Glass Jar	None	USGS

Comments/Descriptions. Collected from sample port in connex.
DTW= 482.65 ft bgs. Day 2 Sample. Pump was turned on @ 10/2/17.
1.428 RFU @ 16/2

Logged By/Date: 10/4/17

Reviewed By/Date: _____

Sample Collection Log

500433 KAFB Rapid Response ESTCP – Groundwater, Phase I, Recirculation

Location Code KAFB-106EX2

Sample Number 106EX2-P1R-100417

Sampling Method Sample Port

Sample Type Grab

QC Code Normal

Sampling Equipment Port, Tubing

QC Partners None

RFA/COC Number 500433EDBPT-GW009

Collection Date 10/4/17

Collection Time 1616

Start Depth 487

End Depth 502

Sample Matrix GW

Sample Team CJ, TK

Containers:

Analytical Suite	Filtered	Qty	Size	Container Type	Preservative	Lab
Fluorescein	NA	1	20 mL	VOA Vial	None	Crawford
Hydrogen/H2O Isotope Ratio	NA	1	60 mL	Glass Jar	None	USGS

Comments/Descriptions. Collected from sample port in connex. Day 2 sample. Pump was turned on 10/2/17. DTW = 480.19 ft bgs 0.0841 RFUs @ 1615.

Logged By/Date: [signature] 10/4/17

Reviewed By/Date: _____

Sample Collection Log

500433 KAFB Rapid Response ESTCP – Groundwater, Phase I, Recirculation

Location Code KAFB-106MW1-I

Sample Number 106MW1I-P1R-100417

Sampling Method Low Flow

Sample Type Grab

QC Code Normal

Sampling Equipment Bladder Pump

QC Partners None

RFA/COC Number 500433EDBPT-GW009

Collection Date 10/4/17

Collection Time 0920

Start Depth 513

End Depth 528

Sample Matrix GW

Sample Team a

Containers:

Analytical Suite	Filtered	Qty	Size	Container Type	Preservative	Lab
Fluorescein	NA	1	20 mL	VOA Vial	None	Crawford
Hydrogen/H2O Isotope Ratio	NA	1	60 mL	Glass Jar	None	USGS

Comments/Descriptions.

Water level meter won't fit down casing. DTW = 476. ft btoc as measured at 106MW1-S.

Some bubbles in YSI and Tubing.

Logged By/Date: 10/4/17

Reviewed By/Date:

Sample Collection Log

500433 KAFB Rapid Response ESTCP – Groundwater, Phase I, Recirculation

Location Code KAFB-106MW1-S

Sample Number 106MW1S-P1R-100417

Sampling Method Low flow

Sample Type Grab

QC Code Normal

Sampling Equipment Bladder Pump

QC Partners None

RFA/COC Number 500433EDBPT-GW009

Collection Date 10/4/17

Collection Time 1200

Start Depth 463

End Depth 498

Sample Matrix GW

Sample Team a

Containers:

Analytical Suite	Filtered	Qty	Size	Container Type	Preservative	Lab
Fluorescein	NA	1	20 mL	VOA Vial	None	Crawford
Hydrogen/H2O Isotope Ratio	NA	1	60 mL	Glass Jar	None	USGS

Comments/Descriptions. Water has strong fuel odor.

DTW = 476.56 ft btoc.

0.331 RFU measured @ 1125

Logged By/Date: 10/4/17

Reviewed By/Date: _____

Sample Collection Log

500433 KAFB Rapid Response ESTCP – Groundwater, Phase I, Recirculation

Location Code KAFB-106MW2I

Sample Number 106MW2I-P1R-100417

Sampling Method low-flow

Sample Type grab

QC Code normal

Sampling Equipment bladder pump

QC Partners N/A

RFA/COC Number 500433EDBPT-GW009

Collection Date 10/4/17

Collection Time 1142

Start Depth 513

End Depth 523

Sample Matrix groundwater

Sample Team TK

Containers:

Analytical Suite	Filtered	Qty	Size	Container Type	Preservative	Lab
Fluorescein	NA	1	20 mL	VOA Vial	None	Crawford
Hydrogen/H2O Isotope Ratio	NA	1	60 mL	Glass Jar	None	USGS

Comments/Descriptions.

Fluorometer reading 0.863 RFU, no dye here yet
"day 2" phase 1 recirc sample

Logged By/Date: [signature] 10/4/17

Reviewed By/Date: _____

Sample Collection Log

500433 KAFB Rapid Response ESTCP – Groundwater, Phase I, Recirculation

Location Code KAFB-106MW25

RFA/COC Number 500433EDBPT-GW009

Sample Number 106MW25-P1R-100417

Collection Date 10/4/17

Sampling Method Grab, low-flow

Collection Time 0948

Sample Type normal

Start Depth 463

QC Code normal

End Depth 498

Sampling Equipment bladder pump, disposable equipment

Sample Matrix Groundwater

QC Partners N/A

Sample Team TK

Containers:

Analytical Suite	Filtered	Qty	Size	Container Type	Preservative	Lab
Fluorescein	NA	1	20 mL	VOA Vial	None	Crawford
Hydrogen/H2O Isotope Ratio	NA	1	60 mL	Glass Jar	None	USGS

Comments/Descriptions.

fluorometer reading 0.216 RFU, no dye here yet.
"day 2" phase 1 sample

Logged By/Date: [signature] 10/4/17

Reviewed By/Date: _____

Sample Collection Log

500433 KAFB Rapid Response ESTCP – Groundwater, Phase I, Recirculation

Location Code KAFB-106063

Sample Number 106063-P2R-100417

Sampling Method low-flow

Sample Type grab

QC Code normal

Sampling Equipment bladderpump

QC Partners None

RFA/COC Number S00433EDBPT-GW009

Collection Date 10/4/17

Collection Time 1510

Start Depth 508

End Depth 523

Sample Matrix GW

Sample Team TK

Containers:

Analytical Suite	Filtered	Qty	Size	Container Type	Preservative	Lab
Fluorescein	NA	1	20 mL	VOA Vial	None	Crawford
Hydrogen/H2O Isotope Ratio	NA	1	60 mL	Glass Jar	None	USGS

Comments/Descriptions.

fluorometer reading 0.154 RFU, no dye
"day 2" phase 2 recirc sample

Logged By/Date: [signature] 10/4/17

Reviewed By/Date: _____

Sample Collection Log

500433 KAFB Rapid Response ESTCP – Groundwater, Phase I, Recirculation

Location Code KAFB-106064

Sample Number 106064-P1R-100417

Sampling Method Low Flow

Sample Type Grab

QC Code Normal

Sampling Equipment Bladder Pump

QC Partners 106064-P1R-100417

RFA/COC Number 500433EDBPT-GW009

Collection Date 10/4/17

Collection Time 1510

Start Depth 488

End Depth 508

Sample Matrix GW

Sample Team CL

Containers:

Analytical Suite	Filtered	Qty	Size	Container Type	Preservative	Lab
Fluorescein	NA	1	20 mL	VOA Vial	None	Crawford
Hydrogen/H2O Isotope Ratio	NA	1	60 mL	Glass Jar	None	USGS

Comments/Descriptions: DTW = 480.58 ft btoc measured @ 106063.

0.013 RFU @ 1436

Bubbles in YSI and tubing.

Logged By/Date: 10/4/17

Reviewed By/Date:

Sample Collection Log

500433 KAFB Rapid Response ESTCP – Groundwater, Phase I, Recirculation

Location Code KAFB-106EX2

RFA/COC Number 500433EDBPT-GW009

Sample Number 106EX2-P1R-100617

Collection Date 10/6/17

Sampling Method dedicated Grundfos pump

Collection Time 1551

Sample Type grab

Start Depth 487

QC Code normal

End Depth 502

Sampling Equipment Sample port in conex

Sample Matrix GW

QC Partners none

Sample Team TK, CL

Containers:

Analytical Suite	Filtered	Qty	Size	Container Type	Preservative	Lab
Fluorescein	NA	1	20 mL	VOA Vial	None	Crawford
Hydrogen/H2O Isotope Ratio	NA	1	60 mL	Glass Jar	None	USGS

Comments/Descriptions.

"day 4" phase I recirc

flouro: 0.04 RFU

Logged By/Date: [signature] 10/6/17

Reviewed By/Date: _____

Sample Collection Log

500433 KAFB Rapid Response ESTCP – Groundwater, Phase I, Recirculation

Location Code KAFB-106EX1

RFA/COC Number 500433EDBPT-GW009

Sample Number 106EX1-P1R-100617

Collection Date 10/6/17

Sampling Method dedicated Grundfos pump

Collection Time 1526

Sample Type grab

Start Depth 487

QC Code normal

End Depth 502

Sampling Equipment sample port in conex

Sample Matrix GW

QC Partners none

Sample Team TK, CL

Containers:

Analytical Suite	Filtered	Qty	Size	Container Type	Preservative	Lab
Fluorescein	NA	1	20 mL	VOA Vial	None	Crawford
Hydrogen/H2O Isotope Ratio	NA	1	60 mL	Glass Jar	None	USGS

Comments/Descriptions.

"day 4" phase 1 recirc

flouro: 0.01 RFU

Logged By/Date: [signature] 10/6/17

Reviewed By/Date: _____

Sample Collection Log

500433 KAFB Rapid Response ESTCP – Groundwater, Phase I, Recirculation

Location Code KAFB-106063

Sample Number 106063-PZR-100617

Sampling Method low-flow

Sample Type grab

QC Code normal

Sampling Equipment bladder pump

QC Partners none

RFA/COC Number 500433EDBPT-GW009

Collection Date 10/6/17

Collection Time 0952

Start Depth 508

End Depth 523

Sample Matrix GW

Sample Team TK

Containers:

Analytical Suite	Filtered	Qty	Size	Container Type	Preservative	Lab
Fluorescein	NA	1	20 mL	VOA Vial	None	Crawford
Hydrogen/H2O Isotope Ratio	NA	1	60 mL	Glass Jar	None	USGS

Comments/Descriptions.

"Day 4", phase I recirc.

fluro: 0.295 RFU, no dye here that can be detected c̄ instrument

Logged By/Date: [signature] 10/6/17

Reviewed By/Date:

Sample Collection Log

500433 KAFB Rapid Response ESTCP – Groundwater, Phase I, Recirculation

Location Code KAFB-106MW25

Sample Number 106MW25-P1R-100617

Sampling Method low-flow

Sample Type grab

QC Code normal

Sampling Equipment bladder pump

QC Partners None

RFA/COC Number 500433EDBPT-GW009

Collection Date 10/6/17

Collection Time 1142

Start Depth 463 ▽476

End Depth 498

Sample Matrix GW

Sample Team TK

Containers:

Analytical Suite	Filtered	Qty	Size	Container Type	Preservative	Lab
Fluorescein	NA	1	20 mL	VOA Vial	None	Crawford
Hydrogen/H2O Isotope Ratio	NA	1	60 mL	Glass Jar	None	USGS

Comments/Descriptions.

"day 4" phase 1 recirc

fluoro: 42.39 RFU, dye is here!

Logged By/Date: [signature] 10/6/17

Reviewed By/Date: _____

Sample Collection Log

500433 KAFB Rapid Response ESTCP – Groundwater, Phase I, Recirculation

Location Code KAFB-106MW2I

RFA/COC Number S00433EDBPT-GW009

Sample Number 106MW2I-P1R-100617

Collection Date 10/6/17

Sampling Method low-flow

Collection Time 1412

Sample Type ~~Routine~~ TSK grab

Start Depth 513

QC Code normal

End Depth 523

Sampling Equipment bladder pump

Sample Matrix GW

QC Partners None

Sample Team TK

Containers:

Analytical Suite	Filtered	Qty	Size	Container Type	Preservative	Lab
Fluorescein	NA	1	20 mL	VOA Vial	None	Crawford
Hydrogen/H2O Isotope Ratio	NA	1	60 mL	Glass Jar	None	USGS

Comments/Descriptions.

"day 4" phase 1 recirc

fluoro: 1.232 RFU

Logged By/Date: [illegible] 10/6/17

Reviewed By/Date:

Sample Collection Log

500433 KAFB Rapid Response ESTCP – Groundwater, Phase I, Recirculation, Day 4

Location Code KAFB-106MW1-I

Sample Number 106MW1I-P1R-100617

Sampling Method Low Flow

Sample Type Grab

QC Code Normal

Sampling Equipment Bladder Pump

QC Partners N/A

RFA/COC Number 500433EDBPT-GW009

Collection Date 10/6/17

Collection Time 1055

Start Depth 513

End Depth 523

Sample Matrix GW

Sample Team CL

Containers:

Analytical Suite	Filtered	Qty	Size	Container Type	Preservative	Lab
Fluorescein	NA	1	20 mL	VOA Vial	None	Crawford
Hydrogen/H2O Isotope Ratio	NA	1	60 mL	Glass Jar	None	USGS

Comments/Descriptions. Day 4 sampling event.
1.631 RFUs @ 1048.

Logged By/Date: 10/6/17

Reviewed By/Date:

Sample Collection Log

500433 KAFB Rapid Response ESTCP – Groundwater, Phase I, Recirculation, Day 4

Location Code KAFB-~~106MW~~ 106064

Sample Number 106064-P1R-100617

Sampling Method Low Flow

Sample Type Grab

QC Code Normal

Sampling Equipment Bladder Pump

QC Partners None

RFA/COC Number 500433EDBPT-GW009

Collection Date 10/6/17

Collection Time 0925

Start Depth 488

End Depth 508

Sample Matrix GW

Sample Team CL

Containers:

Analytical Suite	Filtered	Qty	Size	Container Type	Preservative	Lab
Fluorescein	NA	1	20 mL	VOA Vial	None	Crawford
Hydrogen/H2O Isotope Ratio	NA	1	60 mL	Glass Jar	None	USGS

Comments/Descriptions. DTW = 480.58 ft btoc, as measured @ 106063.
Day 4 sampling event. 41.63 RFUs @ 0901. No tint of color observed.

Logged By/Date: [signature] 10/6/17

Reviewed By/Date: _____

Sample Collection Log

500433 KAFB Rapid Response ESTCP – Groundwater, Phase I, Recirculation, Day 4

Location Code KAFB-106MW1-S

Sample Number 106MW1S-P1R-100617

Sampling Method Low Flow

Sample Type Grab

QC Code Normal

Sampling Equipment Bladder Pump

QC Partners 106MW1S-P1R-100617-FD

RFA/COC Number 500433EDBPT-GW009

Collection Date 10/6/17

Collection Time 1453

Start Depth 463

End Depth 498

Sample Matrix GW

Sample Team CL

Containers:

Analytical Suite	Filtered	Qty	Size	Container Type	Preservative	Lab
Fluorescein	NA	1	20 mL	VOA Vial	None	Crawford
Hydrogen/H2O Isotope Ratio	NA	1	60 mL	Glass Jar	None	USGS

Comments/Descriptions. Day 4 sampling event. DTW=476.31ft btoc
0.03 RFU @ 1343

Logged By/Date: [signature] 10/6/17

Reviewed By/Date: _____

Sample Collection Log

500433 KAFB Rapid Response ESTCP – Groundwater, Phase I, Recirculation Day 7

Location Code KAFB-106064

Sample Number 106064-P1R-100917

Sampling Method Low Flow

Sample Type Grab

QC Code Normal

Sampling Equipment Bladder Pump

QC Partners N/A

RFA/COC Number 500433EDBPT-GW009

Collection Date 10/9/17

Collection Time 1450

Start Depth 488

End Depth 508

Sample Matrix GW

Sample Team CL

Containers:

Analytical Suite	Filtered	Qty	Size	Container Type	Preservative	Lab
Fluorescein	NA	1	20 mL	VOA Vial	None	Crawford
Hydrogen/H2O Isotope Ratio	NA	1	60 mL	Glass Jar	None	USGS

Comments/Descriptions. Water has green tint - from fluorescein dye.
5.229 RFUs @ 1419.

Logged By/Date: 10/9/17

Reviewed By/Date: _____

Sample Collection Log

500433 KAFB Rapid Response ESTCP – Groundwater, Phase I, Recirculation Day 7

Location Code KAFB-106MW1-I

Sample Number 106MW1I-P1R-100917

Sampling Method Low Flow

Sample Type Grab

QC Code Normal

Sampling Equipment Bladder Pump

QC Partners 106MW1I-P1R-100917-FD

RFA/COC Number 500433EDBPT-GW009

Collection Date 10/9/17

Collection Time 0955

Start Depth 513

End Depth 523

Sample Matrix GW

Sample Team CL

Containers:

Analytical Suite	Filtered	Qty	Size	Container Type	Preservative	Lab
Fluorescein	NA	1	20 mL	VOA Vial	None	Crawford
Hydrogen/H2O Isotope Ratio	NA	1	60 mL	Glass Jar	None	USGS

Comments/Descriptions.

no DTW measurement. Cannot get probe down casing.
1.605 RFUs @ 0935

Logged By/Date: 10/9/17

Reviewed By/Date:

Sample Collection Log Day 7

500433 KAFB Rapid Response ESTCP – Groundwater, Phase I, Recirculation

Location Code KAFB-106MW1-S

Sample Number 106MW1S-P1R-100917

Sampling Method Low Flow

Sample Type Grab

QC Code Normal

Sampling Equipment Bladder Pump

QC Partners N/A

RFA/COC Number 500433EDBPT-GW009

Collection Date 10/9/17

Collection Time 1218

Start Depth 463

End Depth 498

Sample Matrix GW

Sample Team CL

Containers:

Analytical Suite	Filtered	Qty	Size	Container Type	Preservative	Lab
Fluorescein	NA	1	20 mL	VOA Vial	None	Crawford
Hydrogen/H2O Isotope Ratio	NA	1	60 mL	Glass Jar	None	USGS

Comments/Descriptions.

Depth to Product = 476.01, DTW = 476.19 ft btoc

0.139 RFU @ 1136. Strong Fuel Odor.

Logged By/Date: 10/9/17

Reviewed By/Date: _____

Sample Collection Log

500433 KAFB Rapid Response ESTCP – Groundwater, Phase I, Recirculation

Location Code KAFB-106063

Sample Number 106063-P1R-100917

Sampling Method low-flow

Sample Type grab

QC Code normal

Sampling Equipment bladder pump

QC Partners none

RFA/COC Number 500433EDBPT-GW009

Collection Date 10/9/17

Collection Time 1052

Start Depth 508

End Depth 523

Sample Matrix GW

Sample Team TK

Containers:

Analytical Suite	Filtered	Qty	Size	Container Type	Preservative	Lab
Fluorescein	NA	1	20 mL	VOA Vial	None	Crawford
Hydrogen/H2O Isotope Ratio	NA	1	60 mL	Glass Jar	None	USGS

Comments/Descriptions.

"Day 7" Phase 1 recirc

fluoro: 0.879 RFUs

Logged By/Date: [signature] 10/9/17

Reviewed By/Date: _____

Sample Collection Log

500433 KAFB Rapid Response ESTCP – Groundwater, Phase I, Recirculation

Location Code KAFB-106MW2I

Sample Number 106MW2I-P1R-100917

Sampling Method low-flow

Sample Type grab

QC Code normal

Sampling Equipment bladder pump

QC Partners none

RFA/COC Number S00433EDBPT-GW009

Collection Date 10/9/17

Collection Time 1216

Start Depth 513

End Depth 523

Sample Matrix GW

Sample Team TK

Containers:

Analytical Suite	Filtered	Qty	Size	Container Type	Preservative	Lab
Fluorescein	NA	1	20 mL	VOA Vial	None	Crawford
Hydrogen/H2O Isotope Ratio	NA	1	60 mL	Glass Jar	None	USGS

Comments/Descriptions.

"day 7" phase I recirc

fluoro: 17.48 RFU, dye is here!

Logged By/Date: 10/9/17

Reviewed By/Date:

Sample Collection Log

500433 KAFB Rapid Response ESTCP – Groundwater, Phase I, Recirculation

Location Code KAFB-106MW25

Sample Number 106MW25-P1R-100917

Sampling Method low-flow

Sample Type grab

QC Code normal

Sampling Equipment bladder pump

QC Partners none

RFA/COC Number 500433EDBPT-GW009

Collection Date 10/9/17

Collection Time 1446

Start Depth 463

End Depth 498

Sample Matrix GW

Sample Team TK

Containers:

Analytical Suite	Filtered	Qty	Size	Container Type	Preservative	Lab
Fluorescein	NA	1	20 mL	VOA Vial	None	Crawford
Hydrogen/H2O Isotope Ratio	NA	1	60 mL	Glass Jar	None	USGS

Comments/Descriptions.

"day 7" phase 1 recirc

fluoro: 2.416 RFU

Logged By/Date: [signature] 10/9/17

Reviewed By/Date: _____

Sample Collection Log

500433 KAFB Rapid Response ESTCP – Groundwater, Phase I, Recirculation

Location Code KAFB-106EX1

Sample Number 106EX1-P1R-100917

Sampling Method Sample port

Sample Type grab

QC Code Normal

Sampling Equipment Sample port/conveyance pipe

QC Partners none

RFA/COC Number S00433EDBPT-GW009

Collection Date 10/9/17

Collection Time ~~1554~~ 1524

Start Depth 487

End Depth 502

Sample Matrix GW

Sample Team ~~GW~~ TSK TK CL

Containers:

Analytical Suite	Filtered	Qty	Size	Container Type	Preservative	Lab
Fluorescein	NA	1	20 mL	VOA Vial	None	Crawford
Hydrogen/H2O Isotope Ratio	NA	1	60 mL	Glass Jar	None	USGS

Comments/Descriptions.

"day 7" phase 1 recirc

fluoro: 0.214 RFU

Logged By/Date: 10/9/17

Reviewed By/Date:

Sample Collection Log

500433 KAFB Rapid Response ESTCP – Groundwater, Phase I, Recirculation

Location Code KAFB-106EX2

Sample Number 106EX2-P2R-100917

Sampling Method sample port

Sample Type grab

QC Code normal

Sampling Equipment sample port / conveyance piping

QC Partners none

RFA/COC Number S00433EDBPT-GW009

Collection Date 10/9/17

Collection Time "~~1524~~ 1554

Start Depth 487

End Depth 502

Sample Matrix GW

Sample Team TK, CL

Containers:

Analytical Suite	Filtered	Qty	Size	Container Type	Preservative	Lab
Fluorescein	NA	1	20 mL	VOA Vial	None	Crawford
Hydrogen/H2O Isotope Ratio	NA	1	60 mL	Glass Jar	None	USGS

Comments/Descriptions.

"day 7" phase I recirc

fluoro: 0.248 RFU

Logged By/Date: [signature] 10/9/17

Reviewed By/Date: _____

Sample Collection Log

500433 KAFB Rapid Response ESTCP – Groundwater, Phase I, Recirculation

Location Code KAFB-106EX2

Sample Number 106EX2-P1R-101217

Sampling Method SHP pump in well

Sample Type grab

QC Code normal

Sampling Equipment Sample port in Conex

QC Partners none

RFA/COC Number 500433EDBPT-GW010

Collection Date 10/12/17

Collection Time 1531

Start Depth 487

End Depth 502

Sample Matrix GW

Sample Team TK, CL

Containers:

Analytical Suite	Filtered	Qty	Size	Container Type	Preservative	Lab
Fluorescein	NA	1	20 mL	VOA Vial	None	Crawford
Hydrogen/H2O Isotope Ratio	NA	1	60 mL	Glass Jar	None	USGS

Comments/Descriptions.

"Day 10" phase 1 recirc

fluoro: 0.127 RFU

Logged By/Date: [illegible] 10/12/17 ***Reviewed By/Date:***

Sample Collection Log

500433 KAFB Rapid Response ESTCP – Groundwater, Phase I, Recirculation

Location Code KAFB-106063

Sample Number 106063-P1R-101217

Sampling Method low flow

Sample Type grab

QC Code normal

Sampling Equipment bladder pump

QC Partners none

RFA/COC Number 500433EDBPT-GW010

Collection Date 10/12/17

Collection Time 0959

Start Depth 508

End Depth 523

Sample Matrix GW

Sample Team TK

Containers:

Analytical Suite	Filtered	Qty	Size	Container Type	Preservative	Lab
Fluorescein	NA	1	20 mL	VOA Vial	None	Crawford
Hydrogen/H2O Isotope Ratio	NA	1	60 mL	Glass Jar	None	USGS

Comments/Descriptions.

"day 10", Phase 1 recirc

fluoro: 0.716 RFU

Logged By/Date: [illegible] 10/12/17 ***Reviewed By/Date:***

Sample Collection Log

500433 KAFB Rapid Response ESTCP – Groundwater, Phase I, Recirculation

Location Code KAFB-106MW2I

Sample Number 106MW2I-P1R-101217

Sampling Method low-flow

Sample Type grab

QC Code normal

Sampling Equipment bladder pump

QC Partners none

RFA/COC Number 500433EDBPT-GW010

Collection Date 10/12/17

Collection Time 1130

Start Depth ~~463~~ TSK 513

End Depth ~~498~~ TSK 523

Sample Matrix GW

Sample Team TK

Containers:

Analytical Suite	Filtered	Qty	Size	Container Type	Preservative	Lab
Fluorescein	NA	1	20 mL	VOA Vial	None	Crawford
Hydrogen/H2O Isotope Ratio	NA	1	60 mL	Glass Jar	None	USGS

Comments/Descriptions:

"day 10", phase I recirc

fluoro: 3.596 RFU

Logged By/Date: [signature] 10/12/17

Reviewed By/Date: _____

Sample Collection Log

500433 KAFB Rapid Response ESTCP – Groundwater, Phase I, Recirculation

Location Code KAFB-106MW2S

RFA/COC Number S00433EDBPT-GW010

Sample Number 106MW2S-P1R-101217

Collection Date 10/12/17

Sampling Method low-flow

Collection Time 1412

Sample Type grab

Start Depth 463

QC Code FD

End Depth 498

Sampling Equipment bladder pump

Sample Matrix GW

QC Partners 106MW2S-P1R-101217-FD

Sample Team TK

Containers:

Analytical Suite	Filtered	Qty	Size	Container Type	Preservative	Lab
Fluorescein	NA	1	20 mL	VOA Vial	None	Crawford
Hydrogen/H2O Isotope Ratio	NA	1	60 mL	Glass Jar	None	USGS

Comments/Descriptions.

"day 10", phase 1 recirc

fluoro: 0.019 RFU

Logged By/Date: [illegible] 10/12/17

Reviewed By/Date: _____

Sample Collection Log

500433 KAFB Rapid Response ESTCP – Groundwater, Phase I, Recirculation

Location Code KAFB-106EX1

Sample Number 106EX1-P1R-101217

Sampling Method 5-HP pump in well

Sample Type grab

QC Code normal

Sampling Equipment Sample port in conex

QC Partners none

RFA/COC Number S00433EDBPT-GW010

Collection Date 10/12/17

Collection Time 1503

Start Depth 487

End Depth 502

Sample Matrix GW

Sample Team TK, CL

Containers:

Analytical Suite	Filtered	Qty	Size	Container Type	Preservative	Lab
Fluorescein	NA	1	20 mL	VOA Vial	None	Crawford
Hydrogen/H2O Isotope Ratio	NA	1	60 mL	Glass Jar	None	USGS

Comments/Descriptions.

"Day 10", phase I recirc

fluoro: 0.335 RFU

Logged By/Date: [signature] 10/12/17 **Reviewed By/Date:** _____

Sample Collection Log

500433 KAFB Rapid Response ESTCP – Groundwater, Phase I, Recirculation

Location Code KAFB-1060164

Sample Number 1060164-PYR-101217

Sampling Method Low Flow

Sample Type Grab

QC Code Normal

Sampling Equipment Bladder Pump

QC Partners None

RFA/COC Number 500433EDBPT-GW010

Collection Date 10/12/17

Collection Time 1348

Start Depth 488

End Depth 508

Sample Matrix GW

Sample Team CL

Containers:

Analytical Suite	Filtered	Qty	Size	Container Type	Preservative	Lab
Fluorescein	NA	1	20 mL	VOA Vial	None	Crawford
Hydrogen/H2O Isotope Ratio	NA	1	60 mL	Glass Jar	None	USGS

Comments/Descriptions. DTW= 479.43ft btoc

Slight green tint to water. 0.837 RFUs @ 1338

Logged By/Date: 10/12/17

Reviewed By/Date:

Sample Collection Log

500433 KAFB Rapid Response ESTCP – Groundwater, Phase I, Recirculation, Day 10

Location Code KAFB-106MW1-S

Sample Number 106MW1S-P1R-101217

Sampling Method Low Flow

Sample Type Grab

QC Code Normal

Sampling Equipment Bladder Pump

QC Partners None

RFA/COC Number 500433EDBPT-GW010

Collection Date 10/12/17

Collection Time 1120

Start Depth 463

End Depth 498

Sample Matrix GW

Sample Team CL

Containers:

Analytical Suite	Filtered	Qty	Size	Container Type	Preservative	Lab
Fluorescein	NA	1	20 mL	VOA Vial	None	Crawford
Hydrogen/H2O Isotope Ratio	NA	1	60 mL	Glass Jar	None	USGS

Comments/Descriptions. DTW=476.31 ft btoc, Depth to Product=476.10 ft btoc
7.920 RF/ls @ 1039. No observable green tint to water.

Logged By/Date: 10/12/17

Reviewed By/Date:

Sample Collection Log

500433 KAFB Rapid Response ESTCP – Groundwater, Phase I, Recirculation, Day 10

Location Code KAFB-106MW1-I

Sample Number 106MW1I-P1R-101217

Sampling Method Low Flow

Sample Type Grab

QC Code Normal

Sampling Equipment Bladder Pump

QC Partners None

RFA/COC Number 500433EDBPT-GW010

Collection Date 10/12/17

Collection Time 0915

Start Depth 513

End Depth 523

Sample Matrix GW

Sample Team CL

Containers:

Analytical Suite	Filtered	Qty	Size	Container Type	Preservative	Lab
Fluorescein	NA	1	20 mL	VOA Vial	None	Crawford
Hydrogen/H2O Isotope Ratio	NA	1	60 mL	Glass Jar	None	USGS

Comments/Descriptions: DTW = 476.12 ft btoc, as measured after pump installation. Cannot fit probe down well to obtain measurement.
1.166 RFUs @ 0825

Bubbles in tubing and YSI.

Logged By/Date: 10/12/17

Reviewed By/Date:

Sample Collection Log

500433 KAFB Rapid Response ESTCP – Groundwater, Phase I, Recirculation, Day 14

Location Code KAFB-106064

Sample Number 106064-P1R-101617

Sampling Method Low Flow

Sample Type Grab

QC Code Normal

Sampling Equipment Bladder Pump

QC Partners N/A

RFA/COC Number 500433EDBPT-GW010

Collection Date 10/16/17

Collection Time 1423

Start Depth 488

End Depth 4508

Sample Matrix GW

Sample Team CL

Containers:

Analytical Suite	Filtered	Qty	Size	Container Type	Preservative	Lab
Fluorescein	NA	1	20 mL	VOA Vial	None	Crawford
Hydrogen/H2O Isotope Ratio	NA	1	60 mL	Glass Jar	None	USGS

Comments/Descriptions: DTW=479.43 ftbtoc – unable to measure water level during sampling. This is post-pump installation DTW.
Slight fuel odor. No green tint to water.

Logged By/Date: 10/16/17

Reviewed By/Date:

Sample Collection Log

500433 KAFB Rapid Response ESTCP – Groundwater, Phase I, Recirculation, Day 14

Location Code KAFB-106MW1-S

Sample Number 106MW1S-P1R-101617

Sampling Method Low Flow

Sample Type Grab

QC Code Normal

Sampling Equipment Bladder Pump

QC Partners N/A

RFA/COC Number 500433EDBPT-GW010

Collection Date 10/16/17

Collection Time 1213

Start Depth 463

End Depth 498

Sample Matrix GW

Sample Team CL

Containers:

Analytical Suite	Filtered	Qty	Size	Container Type	Preservative	Lab
Fluorescein	NA	1	20 mL	VOA Vial	None	Crawford
Hydrogen/H2O Isotope Ratio	NA	1	60 mL	Glass Jar	None	USGS

Comments/Descriptions: Depth to Product = 476.29 ft btoc. DTW = 476.55 ft btoc
Green tint to water from fluoroscene dye.
Strong fuel odor.

Logged By/Date: 10/16/17

Reviewed By/Date:

Sample Collection Log

500433 KAFB Rapid Response ESTCP – Groundwater, Phase I, Recirculation, Day 14

Location Code KAFB-106MW1-I

Sample Number 106MW1I-P1R-101617

Sampling Method Low Flow

Sample Type Grab

QC Code Normal

Sampling Equipment Bladder Pump

QC Partners N/A

RFA/COC Number 500433EDBPT-GW010

Collection Date 10/16/17

Collection Time 1018

Start Depth 513

End Depth 523

Sample Matrix GW

Sample Team CL

Containers:

Analytical Suite	Filtered	Qty	Size	Container Type	Preservative	Lab
Fluorescein	NA	1	20 mL	VOA Vial	None	Crawford
Hydrogen/H2O Isotope Ratio	NA	1	60 mL	Glass Jar	None	USGS

Comments/Descriptions. DTW = 476.12 ft btoc as measured after pump installation. Cannot fit probe down 3" well.

Logged By/Date: 10/16/17

Reviewed By/Date: _____

Sample Collection Log

500433 KAFB Rapid Response ESTCP – Groundwater, Phase I, Recirculation

Location Code KAFB-106EX2

Sample Number 106EX2-P1R-101617

Sampling Method Conveyance pipe

Sample Type grab

QC Code normal

Sampling Equipment Sample port in Conex

QC Partners none

RFA/COC Number 500433EDBPT- ~~101617~~ GW010 TSK

Collection Date 10/16/17

Collection Time 1548

Start Depth 487

End Depth 502

Sample Matrix GW

Sample Team TK, CL

Containers:

Analytical Suite	Filtered	Qty	Size	Container Type	Preservative	Lab
Fluorescein	NA	1	20 mL	VOA Vial	None	Crawford
Hydrogen/H2O Isotope Ratio	NA	1	60 mL	Glass Jar	None	USGS

Comments/Descriptions.

"day 14" phase 1 recirc

Logged By/Date: 10/16/17 ***Reviewed By/Date:***

Sample Collection Log

500433 KAFB Rapid Response ESTCP – Groundwater, Phase I, Recirculation

Location Code KAFB-106063

Sample Number 106063-PZR-101617

Sampling Method low-flow

Sample Type grab

QC Code normal

Sampling Equipment bladder pump

QC Partners none

RFA/COC Number 500433EDBPT-GW010

Collection Date 10/16/17

Collection Time 1126

Start Depth 508

End Depth 523

Sample Matrix GW

Sample Team TK

Containers:

Analytical Suite	Filtered	Qty	Size	Container Type	Preservative	Lab
Fluorescein	NA	1	20 mL	VOA Vial	None	Crawford
Hydrogen/H2O Isotope Ratio	NA	1	60 mL	Glass Jar	None	USGS

Comments/Descriptions.

"day 14" phase I recirc

Logged By/Date: [illegible] 10/16/17

Reviewed By/Date:

Sample Collection Log

500433 KAFB Rapid Response ESTCP – Groundwater, Phase I, Recirculation

Location Code KAFB-106MW2I

Sample Number 106MW2I-P1R-101617

Sampling Method low-flow

Sample Type grab

QC Code normal

Sampling Equipment bladder pump

QC Partners none

RFA/COC Number 500433EDBPT-GW010

Collection Date 10/16/17

Collection Time 1251

Start Depth 513

End Depth 523

Sample Matrix GW

Sample Team TK

Containers:

Analytical Suite	Filtered	Qty	Size	Container Type	Preservative	Lab
Fluorescein	NA	1	20 mL	VOA Vial	None	Crawford
Hydrogen/H2O Isotope Ratio	NA	1	60 mL	Glass Jar	None	USGS

Comments/Descriptions.

"day 14" phase I recirc

Logged By/Date: [illegible] 10/16/17 ***Reviewed By/Date:***

Sample Collection Log

500433 KAFB Rapid Response ESTCP – Groundwater, Phase I, Recirculation

Location Code KAFB-106MW2S

Sample Number 106MW2S-P1R-101617

Sampling Method low-flow

Sample Type grab

QC Code normal

Sampling Equipment bladder pump

QC Partners none

RFA/COC Number 500433EDBPt-~~101617~~ GW010 TSK

Collection Date 10/16/17

Collection Time 1445

Start Depth 463

End Depth 498

Sample Matrix GW

Sample Team TK

Containers:

Analytical Suite	Filtered	Qty	Size	Container Type	Preservative	Lab
Fluorescein	NA	1	20 mL	VOA Vial	None	Crawford
Hydrogen/H2O Isotope Ratio	NA	1	60 mL	Glass Jar	None	USGS

Comments/Descriptions.

"day 14" phase I recirc

Logged By/Date: [signature] 10/16/17 ***Reviewed By/Date:*** _____

Sample Collection Log

500433 KAFB Rapid Response ESTCP – Groundwater, Phase I, Recirculation

Location Code KAFB-106EX1

RFA/COC Number 500433EDBPT-GW010

Sample Number 106EX1-P1R-101617

Collection Date 10/16/17

Sampling Method Conveyance pipe

Collection Time 1514

Sample Type grab

Start Depth 487

QC Code ~~Normal~~ TSK Field Duplicate

End Depth 502

Sampling Equipment Sample port in conex

Sample Matrix GW

QC Partners ~~None~~ TSK 106EX1-P1R-101617-FD

Sample Team TK, CL

Containers:

Analytical Suite	Filtered	Qty	Size	Container Type	Preservative	Lab
Fluorescein	NA	1	20 mL	VOA Vial	None	Crawford
Hydrogen/H2O Isotope Ratio	NA	1	60 mL	Glass Jar	None	USGS

Comments/Descriptions.

"day 14" phase 1 recirc

Logged By/Date: [illegible] 10/16/17 ***Reviewed By/Date:***

Sample Collection Log

500433 KAFB Rapid Response ESTCP – Groundwater, Phase I, Recirculation Day 18

Location Code KAFB-106MW1-I

Sample Number 106MW1I-P1R-102017

Sampling Method Low Flow

Sample Type Grab

QC Code Normal

Sampling Equipment Bladder Pump

QC Partners None

RFA/COC Number 500433EDBPT-GW01R

Collection Date 10/20/17

Collection Time 1000

Start Depth 513

End Depth 523

Sample Matrix GW

Sample Team CL

Containers:

Analytical Suite	Filtered	Qty	Size	Container Type	Preservative	Lab
Fluorescein	NA	1	20 mL	VOA Vial	None	Crawford
Hydrogen/H2O Isotope Ratio	NA	1	60 mL	Glass Jar	None	USGS

Comments/Descriptions: DTW = 476.12 ft btoc, as measured prior to pump installation. Cannot measure DTW at 3" well b/c probe won't fit downwell w/ pump.

Logged By/Date: 10/20/17

Reviewed By/Date:

Sample Collection Log

500433 KAFB Rapid Response ESTCP – Groundwater, Phase I, Recirculation, Day 18

Location Code KAFB-106MW1-S

Sample Number 106MW1S-P1R-102017

Sampling Method Low Flow

Sample Type Grab

QC Code Normal

Sampling Equipment Bladder Pump

QC Partners N/A

RFA/COC Number 500433EDBPT-GW002

Collection Date 10/20/17

Collection Time 1145

Start Depth 463

End Depth 498

Sample Matrix GW

Sample Team CL

Containers:

Analytical Suite	Filtered	Qty	Size	Container Type	Preservative	Lab
Fluorescein	NA	1	20 mL	VOA Vial	None	Crawford
Hydrogen/H2O Isotope Ratio	NA	1	60 mL	Glass Jar	None	USGS

Comments/Descriptions. DTW = ~~476.~~ 475.92 CL ft btoc. Depth to Product = 475.90 ft btoc

Slight green tint to water.

Logged By/Date: [signature] 10/20/17

Reviewed By/Date: _____

Sample Collection Log

500433 KAFB Rapid Response ESTCP – Groundwater, Phase I, Recirculation, Day 18

Location Code KAFB-106064

Sample Number 106064-P1R-102017

Sampling Method Low Flow

Sample Type Grab

QC Code Normal

Sampling Equipment Bladder Pump

QC Partners N/A

RFA/COC Number 500433EDBPT-GW012

Collection Date 10/20/17

Collection Time 1423

Start Depth 488

End Depth 508

Sample Matrix GW

Sample Team a

Containers:

Analytical Suite	Filtered	Qty	Size	Container Type	Preservative	Lab
Fluorescein	NA	1	20 mL	VOA Vial	None	Crawford
Hydrogen/H2O Isotope Ratio	NA	1	60 mL	Glass Jar	None	USGS

Comments/Descriptions: Strong fuel odor. DTW= 479.50 ft btoc.

Logged By/Date: [signature] 10/20/17

Reviewed By/Date: _____

Sample Collection Log

500433 KAFB Rapid Response ESTCP – Groundwater, Phase I, Recirculation

Location Code KAFB-106EX1

Sample Number 106EX1-P1R-102017

Sampling Method conveyance pipe

Sample Type Grab

QC Code normal

Sampling Equipment sample port

QC Partners none

RFA/COC Number 500433EDBPT-GW 012

Collection Date 10/20/17

Collection Time 1507

Start Depth 487

End Depth 502

Sample Matrix GW

Sample Team TK, CL

Containers:

Analytical Suite	Filtered	Qty	Size	Container Type	Preservative	Lab
Fluorescein	NA	1	20 mL	VOA Vial	None	Crawford
Hydrogen/H2O Isotope Ratio	NA	1	60 mL	Glass Jar	None	USGS

Comments/Descriptions.

"day 18" phase 1 recirculation

Logged By/Date: [signature] 10/20/17 ***Reviewed By/Date:*** _____

Sample Collection Log

500433 KAFB Rapid Response ESTCP – Groundwater, Phase I, Recirculation

Location Code KAFB-106MW25

Sample Number 106MW25-P1R-102017

Sampling Method low-flow

Sample Type grab

QC Code normal

Sampling Equipment bladderpump

QC Partners none

RFA/COC Number 500433EDBPT-GW012

Collection Date 10/20/17

Collection Time 1431

Start Depth 463

End Depth 498

Sample Matrix GW

Sample Team TK

Containers:

Analytical Suite	Filtered	Qty	Size	Container Type	Preservative	Lab
Fluorescein	NA	1	20 mL	VOA Vial	None	Crawford
Hydrogen/H2O Isotope Ratio	NA	1	60 mL	Glass Jar	None	USGS

Comments/Descriptions.

"day 18" phase 1 recirculation

Logged By/Date: K Knal 10/20/17

Reviewed By/Date: _____

Sample Collection Log

500433 KAFB Rapid Response ESTCP – Groundwater, Phase I, Recirculation

Location Code KAFB-106MW2I

Sample Number 106MW2I-P1R-102017

Sampling Method low-flow

Sample Type grab

QC Code duplicate

Sampling Equipment bladder pump

QC Partners 106MW2I-P1R-102017-FD

RFA/COC Number S00433EDBPT-GW012

Collection Date 10/20/17

Collection Time 1155

Start Depth 513

End Depth 523

Sample Matrix GW

Sample Team TK

Containers:

Analytical Suite	Filtered	Qty	Size	Container Type	Preservative	Lab
Fluorescein	NA	1	20 mL	VOA Vial	None	Crawford
Hydrogen/H2O Isotope Ratio	NA	1	60 mL	Glass Jar	None	USGS

Comments/Descriptions.

"Day 18" of phase I recirculation

Logged By/Date: E Kunkel, 10/20/17 ***Reviewed By/Date:***

Sample Collection Log

500433 KAFB Rapid Response ESTCP – Groundwater, Phase I, Recirculation

Location Code KAFB-106EX2

Sample Number 106EX2-P1R-102017

Sampling Method Conveyance pipe

Sample Type grab

QC Code normal

Sampling Equipment sample port

QC Partners none

RFA/COC Number 500433EDIBPT-GW012

Collection Date 10/20/17

Collection Time 1542

Start Depth 487

End Depth 502

Sample Matrix GW

Sample Team TK, CC

Containers:

Analytical Suite	Filtered	Qty	Size	Container Type	Preservative	Lab
Fluorescein	NA	1	20 mL	VOA Vial	None	Crawford
Hydrogen/H2O Isotope Ratio	NA	1	60 mL	Glass Jar	None	USGS

Comments/Descriptions.

"day 18" of phase I recirculation

Logged By/Date: [signature] 10/20/17

Reviewed By/Date: _____

Sample Collection Log

500433 KAFB Rapid Response ESTCP – Groundwater, Phase I, Recirculation

Location Code KAFB-106063

Sample Number 106063-PZR-102017

Sampling Method low-flow

Sample Type grab

QC Code normal

Sampling Equipment bladder pump

QC Partners none

RFA/COC Number 500433EDBPT-GW012

Collection Date 10/20/17

Collection Time 1028

Start Depth 508

End Depth 523

Sample Matrix GW

Sample Team TK

Containers:

Analytical Suite	Filtered	Qty	Size	Container Type	Preservative	Lab
Fluorescein	NA	1	20 mL	VOA Vial	None	Crawford
Hydrogen/H2O Isotope Ratio	NA	1	60 mL	Glass Jar	None	USGS

Comments/Descriptions:

"Day 18" of phase 1 recirculation

Logged By/Date: [illegible] 10/20/17 **Reviewed By/Date:** _____

Sample Collection Log

500433 KAFB Rapid Response ESTCP – Groundwater, Phase I, Recirculation

Location Code KAFB-106EX1

RFA/COC Number 500433EDBPT-GW011

Sample Number 106EX1-P1R-102417

Collection Date 10/24/17

Sampling Method conveyance piping

Collection Time 1408

Sample Type grab

Start Depth 487

QC Code field duplicate (FD)

End Depth 502

Sampling Equipment Sample port in conex

Sample Matrix GW

QC Partners 106EX1-P1R-102417-FD

Sample Team TK, CL

Containers:

Analytical Suite	Filtered	Qty	Size	Container Type	Preservative	Lab
EDB by 8011	NA	2	40 mL	VOA Vials	None	Empirical
VOCs by 8260	NA	3	40 mL	VOA Vials	HCl	Empirical
Nitrate by EPA 353.2	NA	1	250 mL	Poly Bottle	H2SO4	Empirical
O-Phosphate by SM4500 PE	Yes	1	250 mL	Poly Bottle	None	Empirical
Dissolved Fe and Mn by 6010	Yes	1	250 mL	Poly Bottle	HNO3	Empirical
Alkalinity by SM2320B Anions (Chloride, Sulfate, Bromide) by EPA 300	NA	1	250 mL	Poly Bottle	None	Empirical
Iodide by EPA 300	NA	1	100 mL	Poly Bottle	None	Test America
Reduced Gases by RSKSOP-175/EPA 3810	NA	2	40 mL	VOA Vials	HCl	CB&I
VFA by EPA 300m	NA	2	40 mL	VOA Vials	None	CB&I
Fluorescein	NA	1	20 mL	VOA Vials	None	Crawford
Hydrogen/H2O Isotope Ratio	NA	1	60 mL	~~VOA Vials~~ Glass Jar	None	USGS

Comments/Descriptions:

"Day 22" phase I recirculation

Logged By/Date: [signature] 10/24/17 ***Reviewed By/Date:*** _____

Sample Collection Log

500433 KAFB Rapid Response ESTCP – Groundwater, Phase I, Recirculation

Location Code KAFB-106MW15

Sample Number 106MW15-P1R-102417

Sampling Method low-flow

Sample Type grab

QC Code normal

Sampling Equipment bladder pump

QC Partners none

RFA/COC Number 500433EDBPT-GW011

Collection Date 10/24/17

Collection Time 1320

Start Depth 463

End Depth 498

Sample Matrix GW

Sample Team TK, CL

Containers:

Analytical Suite	Filtered	Qty	Size	Container Type	Preservative	Lab
EDB by 8011	NA	2	40 mL	VOA Vials	None	Empirical
VOCs by 8260	NA	3	40 mL	VOA Vials	HCl	Empirical
Nitrate by EPA 353.2	NA	1	250 mL	Poly Bottle	H2SO4	Empirical
O-Phosphate by SM4500 PE	Yes	1	250 mL	Poly Bottle	None	Empirical
Dissolved Fe and Mn by 6010	Yes	1	250 mL	Poly Bottle	HNO3	Empirical
Alkalinity by SM2320B Anions (Chloride, Sulfate, Bromide) by EPA 300	NA	1	250 mL	Poly Bottle	None	Empirical
Iodide by EPA 300	NA	1	100 mL	Poly Bottle	None	Test America
Reduced Gases by RSKSOP-175/EPA 3810	NA	2	40 mL	VOA Vials	HCl	CB&I
VFA by EPA 300m	NA	2	40 mL	VOA Vials	None	CB&I
Fluorescein	NA	1	20 mL	VOA Vials	None	Crawford
Hydrogen/H2O Isotope Ratio	NA	1	60 mL	~~VOA Vials~~ Glass Jar	None	USGS

Comments/Descriptions:

"day 22" phase 1 recirc

Logged By/Date: [illegible] 10/24/17 ***Reviewed By/Date:*** _____

Sample Collection Log

500433 KAFB Rapid Response ESTCP – Groundwater, Phase I, Recirculation

Location Code KAFB-106063

Sample Number 106063-P1R-102417

Sampling Method low-flow

Sample Type grab

QC Code normal

Sampling Equipment bladder pump

QC Partners none

RFA/COC Number 500433EDBPT-GW011

Collection Date 10/24/17

Collection Time 0930

Start Depth 508

End Depth 523

Sample Matrix GW

Sample Team TK, CL

Containers:

Analytical Suite	Filtered	Qty	Size	Container Type	Preservative	Lab
EDB by 8011	NA	2	40 mL	VOA Vials	None	Empirical
VOCs by 8260	NA	3	40 mL	VOA Vials	HCl	Empirical
Nitrate by EPA 353.2	NA	1	250 mL	Poly Bottle	H2SO4	Empirical
O-Phosphate by SM4500 PE	Yes	1	250 mL	Poly Bottle	None	Empirical
Dissolved Fe and Mn by 6010	Yes	1	250 mL	Poly Bottle	HNO3	Empirical
Alkalinity by SM2320B Anions (Chloride, Sulfate, Bromide) by EPA 300	NA	1	250 mL	Poly Bottle	None	Empirical
Iodide by EPA 300	NA	1	100 mL	Poly Bottle	None	Test America
Reduced Gases by RSKSOP-175/EPA 3810	NA	2	40 mL	VOA Vials	HCl	CB&I
VFA by EPA 300m	NA	2	40 mL	VOA Vials	None	CB&I
Fluorescein	NA	1	20 mL	VOA Vials	None	Crawford
Hydrogen/H2O Isotope Ratio	NA	1	60 mL	~~VOA Vials~~ Glass Jar	None	USGS

Comments/Descriptions:

"Day 22" phase 1 recirc

Logged By/Date: [signature] 10/24/17

Reviewed By/Date: _____

Sample Collection Log

500433 KAFB Rapid Response ESTCP – Groundwater, Phase I, Recirculation

Location Code KAFB-106064

RFA/COC Number 500433EDBPT-GW011

Sample Number 106064-P1R-102417

Collection Date 10/24/17

Sampling Method low-flow

Collection Time 1123

Sample Type grab

Start Depth 488

QC Code normal

End Depth 508

Sampling Equipment bladder pump

Sample Matrix GW

QC Partners none

Sample Team TK, CC

Containers:

Analytical Suite	Filtered	Qty	Size	Container Type	Preservative	Lab
EDB by 8011	NA	2	40 mL	VOA Vials	None	Empirical
VOCs by 8260	NA	3	40 mL	VOA Vials	HCl	Empirical
Nitrate by EPA 353.2	NA	1	250 mL	Poly Bottle	H2SO4	Empirical
O-Phosphate by SM4500 PE	Yes	1	250 mL	Poly Bottle	None	Empirical
Dissolved Fe and Mn by 6010	Yes	1	250 mL	Poly Bottle	HNO3	Empirical
Alkalinity by SM2320B Anions (Chloride, Sulfate, Bromide) by EPA 300	NA	1	250 mL	Poly Bottle	None	Empirical
Iodide by EPA 300	NA	1	100 mL	Poly Bottle	None	Test America
Reduced Gases by RSKSOP-175/EPA 3810	NA	2	40 mL	VOA Vials	HCl	CB&I
VFA by EPA 300m	NA	2	40 mL	VOA Vials	None	CB&I
Fluorescein	NA	1	20 mL	VOA Vials	None	Crawford
Hydrogen/H2O Isotope Ratio	NA	1	60 mL	~~VOA Vials~~ Glass Jar	None	USGS

Comments/Descriptions:

"Day 22" phase I recirc

Logged By/Date: [signature] 10/24/17

Reviewed By/Date: _____

Sample Collection Log

500433 KAFB Rapid Response ESTCP – Groundwater, Phase I, Recirculation

Location Code KAFB-106EX2

RFA/COC Number 500433EDBPT-GW012

Sample Number 106EX2-P1R-102517

Collection Date 10/25/17

Sampling Method conveyance piping

Collection Time 1415

Sample Type grab

Start Depth 487

QC Code normal

End Depth 502

Sampling Equipment Sample port in conex

Sample Matrix GW

QC Partners none

Sample Team TK, CC

Containers:

Analytical Suite	Filtered	Qty	Size	Container Type	Preservative	Lab
EDB by 8011	NA	2	40 mL	VOA Vials	None	Empirical
VOCs by 8260	NA	3	40 mL	VOA Vials	HCl	Empirical
Nitrate by EPA 353.2	NA	1	250 mL	Poly Bottle	H2SO4	Empirical
O-Phosphate by SM4500 PE	Yes	1	250 mL	Poly Bottle	None	Empirical
Dissolved Fe and Mn by 6010	Yes	1	250 mL	Poly Bottle	HNO3	Empirical
Alkalinity by SM2320B Anions (Chloride, Sulfate, Bromide) by EPA 300	NA	1	250 mL	Poly Bottle	None	Empirical
Iodide by EPA 300	NA	1	100 mL	Poly Bottle	None	Test America
Reduced Gases by RSKSOP-175/EPA 3810	NA	2	40 mL	VOA Vials	HCl	CB&I
VFA by EPA 300m	NA	2	40 mL	VOA Vials	None	CB&I
Fluorescein	NA	1	20 mL	VOA Vials	None	Crawford
Hydrogen/H2O Isotope Ratio	NA	1	60 mL	~~VOA Vials~~ Glass Jar	None	USGS

Comments/Descriptions:

"Day 23" phase 1 recirculation

Logged By/Date: [signature] 10/25/17 ***Reviewed By/Date:*** _____

Sample Collection Log

500433 KAFB Rapid Response ESTCP – Groundwater, Phase I, Recirculation Day 23

Location Code KAFB-106MW1-I

Sample Number 106MW1I-P1R-102517

Sampling Method Low Flow

Sample Type Grab

QC Code Normal

Sampling Equipment Bladder Pump

QC Partners N/A

RFA/COC Number 500433EDBPT-GW012

Collection Date 10/25/17

Collection Time 0948

Start Depth 513

End Depth 523

Sample Matrix GW

Sample Team OC

Containers:

Analytical Suite	Filtered	Qty	Size	Container Type	Preservative	Lab
EDB by 8011	NA	2	40 mL	VOA Vials	None	Empirical
VOCs by 8260	NA	3	40 mL	VOA Vials	HCl	Empirical
Nitrate by EPA 353.2	NA	1	250 mL	Poly Bottle	H2SO4	Empirical
O-Phosphate by SM4500 PE	Yes	1	250 mL	Poly Bottle	None	Empirical
Dissolved Fe and Mn by 6010	Yes	1	250 mL	Poly Bottle	HNO3	Empirical
Alkalinity by SM2320B Anions (Chloride, Sulfate, Bromide) by EPA 300	NA	1	250 mL	Poly Bottle	None	Empirical
Iodide by EPA 300	NA	1	100 mL	Poly Bottle	None	Test America
Reduced Gases by RSKSOP-175/EPA 3810	NA	2	40 mL	VOA Vials	HCl	CB&I
VFA by EPA 300m	NA	2	40 mL	VOA Vials	None	CB&I
Fluorescein	NA	1	20 mL	VOA Vials	None	Crawford
Hydrogen/H2O Isotope Ratio	NA	1	60 mL	~~VOA Vials~~ Glass Jar	None	USGS

Comments/Descriptions.

"Day 23" recirc for phase 1. Many small bubbles in YSI flow cell and sample containers

Logged By/Date: [signature] 10/25/17

Reviewed By/Date: [signature] 10/25/17

Sample Collection Log

500433 KAFB Rapid Response ESTCP – Groundwater, Phase I, Recirculation

Location Code KAFB-106MW2I

RFA/COC Number 500433EDB PT-GW012

Sample Number 106MW2I-P1R-102517

Collection Date 10/25/17

Sampling Method low-flow

Collection Time 1119

Sample Type grab

Start Depth 513

QC Code normal

End Depth 523

Sampling Equipment bladder pump

Sample Matrix GW

QC Partners none

Sample Team TK, CC

Containers:

Analytical Suite	Filtered	Qty	Size	Container Type	Preservative	Lab
EDB by 8011	NA	2	40 mL	VOA Vials	None	Empirical
VOCs by 8260	NA	3	40 mL	VOA Vials	HCl	Empirical
Nitrate by EPA 353.2	NA	1	250 mL	Poly Bottle	H2SO4	Empirical
O-Phosphate by SM4500 PE	Yes	1	250 mL	Poly Bottle	None	Empirical
Dissolved Fe and Mn by 6010	Yes	1	250 mL	Poly Bottle	HNO3	Empirical
Alkalinity by SM2320B Anions (Chloride, Sulfate, Bromide) by EPA 300	NA	1	250 mL	Poly Bottle	None	Empirical
Iodide by EPA 300	NA	1	100 mL	Poly Bottle	None	Test America
Reduced Gases by RSKSOP-175/EPA 3810	NA	2	40 mL	VOA Vials	HCl	CB&I
VFA by EPA 300m	NA	2	40 mL	VOA Vials	None	CB&I
Fluorescein	NA	1	20 mL	VOA Vials	None	Crawford
Hydrogen/H2O Isotope Ratio	NA	1	60 mL	~~VOA Vials~~ Glass Jar	None	USGS

Comments/Descriptions:

"day 23" phase I recirculation

Logged By/Date: [illegible] 10/25/17 ***Reviewed By/Date:***

Sample Collection Log

500433 KAFB Rapid Response ESTCP – Groundwater, Phase I, Recirculation

Location Code KAFB-106MW25

RFA/COC Number 500433EDBPT-GW012

Sample Number 106MW25-P1R-102517

Collection Date 10/25/17

Sampling Method low-flow

Collection Time 1324

Sample Type Grab

Start Depth 463

QC Code normal

End Depth 498

Sampling Equipment bladder pump

Sample Matrix GW

QC Partners none

Sample Team TK, CL

Containers:

Analytical Suite	Filtered	Qty	Size	Container Type	Preservative	Lab
EDB by 8011	NA	2	40 mL	VOA Vials	None	Empirical
VOCs by 8260	NA	3	40 mL	VOA Vials	HCl	Empirical
Nitrate by EPA 353.2	NA	1	250 mL	Poly Bottle	H2SO4	Empirical
O-Phosphate by SM4500 PE	Yes	1	250 mL	Poly Bottle	None	Empirical
Dissolved Fe and Mn by 6010	Yes	1	250 mL	Poly Bottle	HNO3	Empirical
Alkalinity by SM2320B Anions (Chloride, Sulfate, Bromide) by EPA 300	NA	1	250 mL	Poly Bottle	None	Empirical
Iodide by EPA 300	NA	1	100 mL	Poly Bottle	None	Test America
Reduced Gases by RSKSOP-175/EPA 3810	NA	2	40 mL	VOA Vials	HCl	CB&I
VFA by EPA 300m	NA	2	40 mL	VOA Vials	None	CB&I
Fluorescein	NA	1	20 mL	VOA Vials	None	Crawford
Hydrogen/H2O Isotope Ratio	NA	1	60 mL	~~VOA Vials~~ Glass Jar	None	USGS

Comments/Descriptions:

"Day 23" phase 1 recirculation phase

Logged By/Date: [signature] 10/25/17 ***Reviewed By/Date:*** _____

Sample Collection Log

500433 KAFB Rapid Response ESTCP – Groundwater, Phase I, Recirculation

Location Code KAFB-106EX2

Sample Number 106EX2-P1R-110117

Sampling Method Conveyance piping

Sample Type grab

QC Code FD

Sampling Equipment Sample port

QC Partners 106EX2-P1R-110117-FD

RFA/COC Number S00433EDBPT-GW013

Collection Date 11/01/17

Collection Time 1521

Start Depth 487

End Depth 502

Sample Matrix GW

Sample Team TK, CL

Containers:

Analytical Suite	Filtered	Qty	Size	Container Type	Preservative	Lab
Fluorescein	NA	1	20 mL	VOA Vial	None	Crawford
Hydrogen/H2O Isotope Ratio	NA	1	60 mL	Glass Jar	None	USGS

Comments/Descriptions.

"Day 30" recirculation part of phase I

FD collected, 106EX2-P1R-110117-FD

Logged By/Date: [signature] 11/01/17 ***Reviewed By/Date:*** _____

Sample Collection Log

500433 KAFB Rapid Response ESTCP – Groundwater, Phase I, Recirculation

Location Code KAFB-106063

Sample Number 106063-P1R-110117

Sampling Method low-flow

Sample Type grab

QC Code normal

Sampling Equipment bladder pump

QC Partners none

RFA/COC Number 500433EDBPT-GW013

Collection Date 11/01/17

Collection Time 0956

Start Depth 508

End Depth 523

Sample Matrix GW

Sample Team TK, CL

Containers:

Analytical Suite	Filtered	Qty	Size	Container Type	Preservative	Lab
Fluorescein	NA	1	20 mL	VOA Vial	None	Crawford
Hydrogen/H2O Isotope Ratio	NA	1	60 mL	Glass Jar	None	USGS

Comments/Descriptions.

"Day 30" of recirculation for Phase 1

Logged By/Date: [signature] 11/1/17

Reviewed By/Date: _____

Sample Collection Log

500433 KAFB Rapid Response ESTCP – Groundwater, Phase I, Recirculation

Location Code KAFB-106MW2I

RFA/COC Number S00433EDBPT-GW013

Sample Number 106MW2I-P1R-110117

Collection Date 11/01/17

Sampling Method low-flow

Collection Time 1128

Sample Type grab

Start Depth 513

QC Code normal

End Depth 523

Sampling Equipment bladder pump

Sample Matrix GW

QC Partners none

Sample Team TK

Containers:

Analytical Suite	Filtered	Qty	Size	Container Type	Preservative	Lab
Fluorescein	NA	1	20 mL	VOA Vial	None	Crawford
Hydrogen/H2O Isotope Ratio	NA	1	60 mL	Glass Jar	None	USGS

Comments/Descriptions.

"Day 30" recirculation for phase I

Logged By/Date: [signature] 11/01/17

Reviewed By/Date: _____

Sample Collection Log

500433 KAFB Rapid Response ESTCP – Groundwater, Phase I, Recirculation

Location Code KAFB-106MW2S

RFA/COC Number 500433EDBPT-GW013

Sample Number 106MW2S-P1R-110117

Collection Date 11/01/17

Sampling Method low-flow

Collection Time 1417

Sample Type grab

Start Depth 463

QC Code normal

End Depth 498

Sampling Equipment bladder pump

Sample Matrix GW

QC Partners none

Sample Team TK

Containers:

Analytical Suite	Filtered	Qty	Size	Container Type	Preservative	Lab
Fluorescein	NA	1	20 mL	VOA Vial	None	Crawford
Hydrogen/H2O Isotope Ratio	NA	1	60 mL	Glass Jar	None	USGS

Comments/Descriptions.

"Day 30" recirculation part of phase I

Logged By/Date: [signature] 11/01/17 ***Reviewed By/Date:*** _____

Sample Collection Log

500433 KAFB Rapid Response ESTCP – Groundwater, Phase I, Recirculation

Location Code KAFB-106EX1

Sample Number 106EX1-P2R-110117

Sampling Method Conveyance pipe

Sample Type grab

QC Code normal

Sampling Equipment Sample port

QC Partners none

RFA/COC Number S00433EDBPT-GW013

Collection Date 11/01/17

Collection Time 1447

Start Depth 487

End Depth 502

Sample Matrix GW

Sample Team TK, CL

Containers:

Analytical Suite	Filtered	Qty	Size	Container Type	Preservative	Lab
Fluorescein	NA	1	20 mL	VOA Vial	None	Crawford
Hydrogen/H2O Isotope Ratio	NA	1	60 mL	Glass Jar	None	USGS

Comments/Descriptions.

"Day 30" phase 1 recirculation part

Logged By/Date: [signature] 11/01/17 **Reviewed By/Date:** _____

Sample Collection Log

500433 KAFB Rapid Response ESTCP – Groundwater, Phase I, Recirculation

Location Code KAFB-106064

Sample Number 106064-P1R-110117

Sampling Method Low Flow

Sample Type Grab

QC Code Normal

Sampling Equipment Bladder Pump

QC Partners N/A

RFA/COC Number 500433EDBPT-GW013

Collection Date 11/1/17

Collection Time 1342

Start Depth 488

End Depth 508

Sample Matrix GW

Sample Team CL

Containers:

Analytical Suite	Filtered	Qty	Size	Container Type	Preservative	Lab
Fluorescein	NA	1	20 mL	VOA Vial	None	Crawford
Hydrogen/H2O Isotope Ratio	NA	1	60 mL	Glass Jar	None	USGS

Comments/Descriptions: DTW = 479.

Water is yellow from fluorescien dye (initally)

Logged By/Date: 11/1/17

Reviewed By/Date:

Sample Collection Log

500433 KAFB Rapid Response ESTCP – Groundwater, Phase I, Recirculation

Location Code KAFB-106MW1-S

Sample Number 106MW1S-P1R-110117

Sampling Method Low Flow

Sample Type Grab

QC Code Normal

Sampling Equipment Bladder Pump

QC Partners N/A

RFA/COC Number 500433EDBPT-GW013

Collection Date 11/1/17

Collection Time 1128

Start Depth 463

End Depth 498

Sample Matrix GW

Sample Team CL

Containers:

Analytical Suite	Filtered	Qty	Size	Container Type	Preservative	Lab
Fluorescein	NA	1	20 mL	VOA Vial	None	Crawford
Hydrogen/H2O Isotope Ratio	NA	1	60 mL	Glass Jar	None	USGS

Comments/Descriptions: DTW=475.65 ftbtoc; Depth to product = None ftbtoc

Strong fuel odor.

Logged By/Date: [signature] 11/1/17

Reviewed By/Date: _____

Sample Collection Log

500433 KAFB Rapid Response ESTCP – Groundwater, Phase I, Recirculation Day 30

Location Code KAFB-106MW1-I

Sample Number 106MW1I-P1R-110117

Sampling Method Low Flow

Sample Type Grab

QC Code Normal

Sampling Equipment Bladder Pump

QC Partners N/A

RFA/COC Number 500433EDBPT-GW013

Collection Date 11/1/17

Collection Time 0932

Start Depth 513

End Depth 523

Sample Matrix GW

Sample Team CL

Containers:

Analytical Suite	Filtered	Qty	Size	Container Type	Preservative	Lab
Fluorescein	NA	1	20 mL	VOA Vial	None	Crawford
Hydrogen/H2O Isotope Ratio	NA	1	60 mL	Glass Jar	None	USGS

Comments/Descriptions: Cannot measure DTW at 3" well – probe will not fit downhole w/ pump.

Logged By/Date: 11/1/17

Reviewed By/Date:

Sample Collection Log

500433 KAFB Rapid Response ESTCP – Groundwater, Phase I, Passive, Week 2

Location Code KAFB-106MW2I

RFA/COC Number S00433EDBPT-GW014

Sample Number 106MW2I-P1R-111517

Collection Date 11/15/17

Sampling Method low-flow

Collection Time 1438

Sample Type grab

Start Depth 513

QC Code normal

End Depth 523

Sampling Equipment bladder pump

Sample Matrix GW

QC Partners none

Sample Team TK, CL

Containers:

Analytical Suite	Filtered	Qty	Size	Container Type	Preservative	Lab
EDB by 8011	NA	2	40 mL	VOA Vials	None	Empirical
VOCs by 8260	NA	3	40 mL	VOA Vials	HCl	Empirical
Nitrate by EPA 353.2	NA	1	250 mL	Poly Bottle	H2SO4	Empirical
O-Phosphate by SM4500 PE	NA	1	250 mL	Poly Bottle	None	Empirical
Dissolved Fe and Mn by 6010	Yes	1	250 mL	Poly Bottle	HNO3	Empirical
Alkalinity by SM2320B Anions (Chloride, Sulfate, Bromide) by EPA 300	NA	1	250 mL	Poly Bottle	None	Empirical
Iodide by EPA 300	NA	1	100 mL	Poly Bottle	None	Test America
Reduced Gases by RSKSOP-175/EPA 3810	NA	2	40 mL	VOA Vials	HCl	CB&I
VFA by EPA 300m	NA	2	40 mL	VOA Vials	None	CB&I
Fluorescein	NA	1	20 mL	VOA Vials	None	Crawford
Hydrogen/H2O Isotope Ratio	NA	1	60 mL	VOA Vials	None	USGS

Comments/Descriptions:

106MW2I has tint of green fluorescent color to it.

Logged By/Date: [illegible] 11/15/17 ***Reviewed By/Date:***

Sample Collection Log

500433 KAFB Rapid Response ESTCP – Groundwater, Phase I, Passive, Week 2

Location Code KAFB-106063

RFA/COC Number 500433EDBPT-GW014

Sample Number 106063-P1P-111517

Collection Date 11/15/17

Sampling Method low-flow

Collection Time 0951

Sample Type grab

Start Depth 508

QC Code normal

End Depth 523

Sampling Equipment bladder pump

Sample Matrix GW

QC Partners none

Sample Team TK, CL

Containers:

Analytical Suite	Filtered	Qty	Size	Container Type	Preservative	Lab
EDB by 8011	NA	2	40 mL	VOA Vials	None	Empirical
VOCs by 8260	NA	3	40 mL	VOA Vials	HCl	Empirical
Nitrate by EPA 353.2	NA	1	250 mL	Poly Bottle	H2SO4	Empirical
O-Phosphate by SM4500 PE	NA	1	250 mL	Poly Bottle	None	Empirical
Dissolved Fe and Mn by 6010	Yes	1	250 mL	Poly Bottle	HNO3	Empirical
Alkalinity by SM2320B Anions (Chloride, Sulfate, Bromide) by EPA 300	NA	1	250 mL	Poly Bottle	None	Empirical
Iodide by EPA 300	NA	1	100 mL	Poly Bottle	None	Test America
Reduced Gases by RSKSOP-175/EPA 3810	NA	2	40 mL	VOA Vials	HCl	CB&I
VFA by EPA 300m	NA	2	40 mL	VOA Vials	None	CB&I
Fluorescein	NA	1	20 mL	VOA Vials	None	Crawford
Hydrogen/H2O Isotope Ratio	NA	1	60 mL	VOA Vials	None	USGS

Comments/Descriptions.

Logged By/Date: 11/15/17 ***Reviewed By/Date:***

Sample Collection Log

500433 KAFB Rapid Response ESTCP – Groundwater, Phase I, Passive, Week 2

Location Code KAFB-106064

Sample Number 106064-P1P-111517

Sampling Method low-flow

Sample Type grab

QC Code normal

Sampling Equipment bladder pump

QC Partners none

RFA/COC Number 500433EDBPT-GW014

Collection Date 11/15/17

Collection Time 1153

Start Depth 488

End Depth 508

Sample Matrix GW

Sample Team TK

Containers:

Analytical Suite	Filtered	Qty	Size	Container Type	Preservative	Lab
EDB by 8011	NA	2	40 mL	VOA Vials	None	Empirical
VOCs by 8260	NA	3	40 mL	VOA Vials	HCl	Empirical
Nitrate by EPA 353.2	NA	1	250 mL	Poly Bottle	H2SO4	Empirical
O-Phosphate by SM4500 PE	NA	1	250 mL	Poly Bottle	None	Empirical
Dissolved Fe and Mn by 6010	Yes	1	250 mL	Poly Bottle	HNO3	Empirical
Alkalinity by SM2320B Anions (Chloride, Sulfate, Bromide) by EPA 300	NA	1	250 mL	Poly Bottle	None	Empirical
Iodide by EPA 300	NA	1	100 mL	Poly Bottle	None	Test America
Reduced Gases by RSKSOP-175/EPA 3810	NA	2	40 mL	VOA Vials	HCl	CB&I
VFA by EPA 300m	NA	2	40 mL	VOA Vials	None	CB&I
Fluorescein	NA	1	20 mL	VOA Vials	None	Crawford
Hydrogen/H2O Isotope Ratio	NA	1	60 mL	VOA Vials	None	USGS

Comments/Descriptions.

water has slight fluorescent green tint to it.

Logged By/Date: [signature] 11/15/17 ***Reviewed By/Date:*** _____

Sample Collection Log

500433 KAFB Rapid Response ESTCP – Groundwater, Phase I, Passive, Week 2

Location Code KAFB-106MW1-S

Sample Number 106MW1S-P1P-111517

Sampling Method Low Flow

Sample Type Grab

QC Code Normal

Sampling Equipment Bladder Pump

QC Partners N/A

RFA/COC Number 500433EDBPT-GW014

Collection Date 11/15/17

Collection Time 1136

Start Depth 463

End Depth 498

Sample Matrix GW

Sample Team CL

Containers:

Analytical Suite	Filtered	Qty	Size	Container Type	Preservative	Lab
EDB by 8011	NA	2	40 mL	VOA Vials	None	Empirical
VOCs by 8260	NA	3	40 mL	VOA Vials	HCl	Empirical
Nitrate by EPA 353.2	NA	1	250 mL	Poly Bottle	H2SO4	Empirical
O-Phosphate by SM4500 PE	NA	1	250 mL	Poly Bottle	None	Empirical
Dissolved Fe and Mn by 6010	Yes	1	250 mL	Poly Bottle	HNO3	Empirical
Alkalinity by SM2320B Anions (Chloride, Sulfate, Bromide) by EPA 300	NA	1	250 mL	Poly Bottle	None	Empirical
Iodide by EPA 300	NA	1	100 mL	Poly Bottle	None	Test America
Reduced Gases by RSKSOP-175/EPA 3810	NA	2	40 mL	VOA Vials	HCl	CB&I
VFA by EPA 300m	NA	2	40 mL	VOA Vials	None	CB&I
Fluorescein	NA	1	20 mL	VOA Vials	None	Crawford
Hydrogen/H2O Isotope Ratio	NA	1	60 mL	VOA Vials	None	USGS

Comments/Descriptions: DTW=475.85 ft btoc. No measurable product
Water is a dirty yellow tint and smells like fuel and sewage.

Logged By/Date: [signature] 11/15/17

Reviewed By/Date: _____

Sample Collection Log

500433 KAFB Rapid Response ESTCP – Groundwater, Phase I, Passive, Week 2

Location Code KAFB-106MW1-I

Sample Number 106MW1I-P1P-111517

Sampling Method Low Flow

Sample Type Grab

QC Code Normal

Sampling Equipment Bladder Pump

QC Partners None

RFA/COC Number 500433EDBPT-GW014

Collection Date 11/15/17

Collection Time 0919

Start Depth 513

End Depth 523

Sample Matrix GW

Sample Team CL

Containers:

Analytical Suite	Filtered	Qty	Size	Container Type	Preservative	Lab
EDB by 8011	NA	2	40 mL	VOA Vials	None	Empirical
VOCs by 8260	NA	3	40 mL	VOA Vials	HCl	Empirical
Nitrate by EPA 353.2	NA	1	250 mL	Poly Bottle	H2SO4	Empirical
O-Phosphate by SM4500 PE	NA	1	250 mL	Poly Bottle	None	Empirical
Dissolved Fe and Mn by 6010	Yes	1	250 mL	Poly Bottle	HNO3	Empirical
Alkalinity by SM2320B Anions (Chloride, Sulfate, Bromide) by EPA 300	NA	1	250 mL	Poly Bottle	None	Empirical
Iodide by EPA 300	NA	1	100 mL	Poly Bottle	None	Test America
Reduced Gases by RSKSOP-175/EPA 3810	NA	2	40 mL	VOA Vials	HCl	CB&I
VFA by EPA 300m	NA	2	40 mL	VOA Vials	None	CB&I
Fluorescein	NA	1	20 mL	VOA Vials	None	Crawford
Hydrogen/H2O Isotope Ratio	NA	1	60 mL	VOA Vials	None	USGS

Comments/Descriptions: Cannot measure DTW – probe won't fit down 3" wells.

Logged By/Date: CL Fuller 11/15/17

Reviewed By/Date: _____

Sample Collection Log

500433 KAFB Rapid Response ESTCP – Groundwater, Phase I, Passive, Week 2

Location Code KAFB-106EX1

Sample Number 106EX1-P1P-111617

Sampling Method Low Flow

Sample Type Grab

QC Code Normal

Sampling Equipment Grunfos pump, port

QC Partners N/A

RFA/COC Number 500433EDBPT-GW015

Collection Date 11/16/17

Collection Time 1318

Start Depth 487

End Depth a 487502

Sample Matrix a ~~502~~ GW

Sample Team CJK

Containers:

Analytical Suite	Filtered	Qty	Size	Container Type	Preservative	Lab
EDB by 8011	NA	2	40 mL	VOA Vials	None	Empirical
VOCs by 8260	NA	3	40 mL	VOA Vials	HCl	Empirical
Nitrate by EPA 353.2	NA	1	250 mL	Poly Bottle	H2SO4	Empirical
O-Phosphate by SM4500 PE	NA	1	250 mL	Poly Bottle	None	Empirical
Dissolved Fe and Mn by 6010	Yes	1	250 mL	Poly Bottle	HNO3	Empirical
Alkalinity by SM2320B Anions (Chloride, Sulfate, Bromide) by EPA 300	NA	1	250 mL	Poly Bottle	None	Empirical
Iodide by EPA 300	NA	1	100 mL	Poly Bottle	None	Test America
Reduced Gases by RSKSOP-175/EPA 3810	NA	2	40 mL	VOA Vials	HCl	CB&I
VFA by EPA 300m	NA	2	40 mL	VOA Vials	None	CB&I
Fluorescein	NA	1	20 mL	VOA Vials	None	Crawford
Hydrogen/H2O Isotope Ratio	NA	1	60 mL	VOA Vials	None	USGS

Comments/Descriptions: DTW pre pump on = 476.11 ft bgs. Water is fairly clear and aerated.

Logged By/Date: [signature] 11/16/17

Reviewed By/Date: _____

Sample Collection Log

500433 KAFB Rapid Response ESTCP – Groundwater, Phase I, Passive, Week 2

Location Code KAFB-1061N1

Sample Number 1061N1-P1P-111617

Sampling Method Low Flow

Sample Type Grab

QC Code Normal

Sampling Equipment Grundfos Pump

QC Partners 1061N1-P1P-111617-FD

RFA/COC Number 500433EDBPT-GW015

Collection Date 11/16/17

Collection Time 1105

Start Depth 477

End Depth 497

Sample Matrix GW

Sample Team CL, TK

Containers:

Analytical Suite	Filtered	Qty	Size	Container Type	Preservative	Lab
EDB by 8011	NA	2	40 mL	VOA Vials	None	Empirical
VOCs by 8260	NA	3	40 mL	VOA Vials	HCl	Empirical
Nitrate by EPA 353.2	NA	1	250 mL	Poly Bottle	H2SO4	Empirical
O-Phosphate by SM4500 PE	NA	1	250 mL	Poly Bottle	None	Empirical
Dissolved Fe and Mn by 6010	Yes	1	250 mL	Poly Bottle	HNO3	Empirical
Alkalinity by SM2320B Anions (Chloride, Sulfate, Bromide) by EPA 300	NA	1	250 mL	Poly Bottle	None	Empirical
Iodide by EPA 300	NA	1	100 mL	Poly Bottle	None	Test America
Reduced Gases by RSKSOP-175/EPA 3810	NA	2	40 mL	VOA Vials	HCl	CB&I
VFA by EPA 300m	NA	2	40 mL	VOA Vials	None	CB&I
Fluorescein	NA	1	20 mL	VOA Vials	None	Crawford
Hydrogen/H2O Isotope Ratio	NA	1	60 mL	VOA Vials	None	USGS

Comments/Descriptions: DTW pre purge = 476.15 ft bgs. Water is very dark brown/gray initially. Fuel and sewage odor noted.

Logged By/Date: [signature] 11/16/17

Reviewed By/Date: _____

Sample Collection Log

500433 KAFB Rapid Response ESTCP – Groundwater, Phase I, Passive, Week 2

Location Code KAFB-106MW2-S

Sample Number 106MW2S-P1P-111617

Sampling Method Low Flow

Sample Type Grab

QC Code Normal

Sampling Equipment Bladder Pump

QC Partners N/A

RFA/COC Number 500433EDBPT-GW0015

Collection Date 11/16/17

Collection Time 0925

Start Depth 463

End Depth 498

Sample Matrix GW

Sample Team CLITK

Containers:

Analytical Suite	Filtered	Qty	Size	Container Type	Preservative	Lab
EDB by 8011	NA	2	40 mL	VOA Vials	None	Empirical
VOCs by 8260	NA	3	40 mL	VOA Vials	HCl	Empirical
Nitrate by EPA 353.2	NA	1	250 mL	Poly Bottle	H2SO4	Empirical
O-Phosphate by SM4500 PE	NA	1	250 mL	Poly Bottle	None	Empirical
Dissolved Fe and Mn by 6010	Yes	1	250 mL	Poly Bottle	HNO3	Empirical
Alkalinity by SM2320B Anions (Chloride, Sulfate, Bromide) by EPA 300	NA	1	250 mL	Poly Bottle	None	Empirical
Iodide by EPA 300	NA	1	100 mL	Poly Bottle	None	Test America
Reduced Gases by RSKSOP-175/EPA 3810	NA	2	40 mL	VOA Vials	HCl	CB&I
VFA by EPA 300m	NA	2	40 mL	VOA Vials	None	CB&I
Fluorescein	NA	1	20 mL	VOA Vials	None	Crawford
Hydrogen/H2O Isotope Ratio	NA	1	60 mL	VOA Vials	None	USGS

Comments/Descriptions: DTW cannot be measured due to pump tubing obstruction.

Logged By/Date: [signature] 11/16/17

Reviewed By/Date: _____

Sample Collection Log

500433 KAFB Rapid Response ESTCP – Groundwater, Phase I, Passive, Week 2

Location Code KAFB-106EX2

Sample Number 106EX2-P1P-111617

Sampling Method Low Flow / Sample Port

Sample Type ~~Nr~~ Grab

QC Code Normal

Sampling Equipment Grunfos Pump, port

QC Partners N/A

RFA/COC Number 500433EDBPT-GW015

Collection Date 11/16/17

Collection Time 1357

Start Depth 487

End Depth 502

Sample Matrix GW

Sample Team CL, JK

Containers:

Analytical Suite	Filtered	Qty	Size	Container Type	Preservative	Lab
EDB by 8011	NA	2	40 mL	VOA Vials	None	Empirical
VOCs by 8260	NA	3	40 mL	VOA Vials	HCl	Empirical
Nitrate by EPA 353.2	NA	1	250 mL	Poly Bottle	H2SO4	Empirical
O-Phosphate by SM4500 PE	NA	1	250 mL	Poly Bottle	None	Empirical
Dissolved Fe and Mn by 6010	Yes	1	250 mL	Poly Bottle	HNO3	Empirical
Alkalinity by SM2320B Anions (Chloride, Sulfate, Bromide) by EPA 300	NA	1	250 mL	Poly Bottle	None	Empirical
Iodide by EPA 300	NA	1	100 mL	Poly Bottle	None	Test America
Reduced Gases by RSKSOP-175/EPA 3810	NA	2	40 mL	VOA Vials	HCl	CB&I
VFA by EPA 300m	NA	2	40 mL	VOA Vials	None	CB&I
Fluorescein	NA	1	20 mL	VOA Vials	None	Crawford
Hydrogen/H2O Isotope Ratio	NA	1	60 mL	VOA Vials	None	USGS

Comments/Descriptions: DTW pre pump on = 476.09 ft bgs. Fuel odor water is aerated

Logged By/Date: [signature] 11/16/17

Reviewed By/Date: _____

Sample Collection Log

500433 KAFB Rapid Response ESTCP – Groundwater, Phase I, Passive, Week 4

Location Code KAFB-106MW2-S

Sample Number 106MW2S- P1P-

Sampling Method Low Flow

Sample Type Grab

QC Code Normal

Sampling Equipment Bladder Pump

QC Partners N/A

RFA/COC Number 500433EDBPT-GW016

Collection Date 11/20/17

Collection Time 1310

Start Depth 463

End Depth 498

Sample Matrix GW

Sample Team CL, TK

Containers:

Analytical Suite	Filtered	Qty	Size	Container Type	Preservative	Lab
EDB by 8011	NA	2	40 mL	VOA Vials	None	Empirical
VOCs by 8260	NA	3	40 mL	VOA Vials	HCl	Empirical
Nitrate by EPA 353.2	NA	1	250 mL	Poly Bottle	H2SO4	Empirical
O-Phosphate by SM4500 PE	NA	1	250 mL	Poly Bottle	None	Empirical
Dissolved Fe and Mn by 6010	Yes	1	250 mL	Poly Bottle	HNO3	Empirical
Alkalinity by SM2320B Anions (Chloride, Sulfate, Bromide) by EPA 300	NA	1	250 mL	Poly Bottle	None	Empirical
Iodide by EPA 300	NA	1	100 mL	Poly Bottle	None	Test America
Reduced Gases by RSKSOP-175/EPA 3810	NA	2	40 mL	VOA Vials	HCl	CB&I
VFA by EPA 300m	NA	2	40 mL	VOA Vials	None	CB&I
QuantArray-Chlor	NA	1	1 L	Poly Bottle	None	Microbial Insights
Fluorescein	NA	1	20 mL	VOA Vials	None	Crawford
Hydrogen/H2O Isotope Ratio	NA	1	60 mL	VOA Vials	None	USGS
EDB CSIA	NA	2	1 L	Amber Bottle	HCl	University of Oklahom

Comments/Descriptions: Cannot measure DTW at well due to tubing obstruction

Logged By/Date: [illegible] 11/20/17 ***Reviewed By/Date:*** _____

Sample Collection Log

500433 KAFB Rapid Response ESTCP – Groundwater, Phase I, Passive, Week 4

Location Code KAFB-106MW1-S

Sample Number 106MW1S-P1P-

Sampling Method Low Flow

Sample Type Grab

QC Code Normal

Sampling Equipment Bladder Pump

QC Partners N/A

RFA/COC Number 500433EDBPT-GW016

Collection Date 11/28/17

Collection Time 1130

Start Depth 463

End Depth 498

Sample Matrix GW

Sample Team CL, TK

Containers:

Analytical Suite	Filtered	Qty	Size	Container Type	Preservative	Lab
EDB by 8011	NA	2	40 mL	VOA Vials	None	Empirical
VOCs by 8260	NA	3	40 mL	VOA Vials	HCl	Empirical
Nitrate by EPA 353.2	NA	1	250 mL	Poly Bottle	H2SO4	Empirical
O-Phosphate by SM4500 PE	NA	1	250 mL	Poly Bottle	None	Empirical
Dissolved Fe and Mn by 6010	Yes	1	250 mL	Poly Bottle	HNO3	Empirical
Alkalinity by SM2320B Anions (Chloride, Sulfate, Bromide) by EPA 300	NA	1	250 mL	Poly Bottle	None	Empirical
Iodide by EPA 300	NA	1	100 mL	Poly Bottle	None	Test America
Reduced Gases by RSKSOP-175/EPA 3810	NA	2	40 mL	VOA Vials	HCl	CB&I
VFA by EPA 300m	NA	2	40 mL	VOA Vials	None	CB&I
QuantArray-Chlor	NA	1	1 L	Poly Bottle	None	Microbial Insights
Fluorescein	NA	1	20 mL	VOA Vials	None	Crawford
Hydrogen/H2O Isotope Ratio	NA	1	60 mL	VOA Vials	None	USGS
EDB CSIA	NA	2	1 L	Amber Bottle	HCl	University of Oklahom

Comments/Descriptions: DTW=475.46 ft btoc, no measurable product. Purge water smells like fuel and fouling.

Logged By/Date: [signature] 11/28/17 ***Reviewed By/Date:***

Sample Collection Log

500433 KAFB Rapid Response ESTCP – Groundwater, Phase I, Passive, Week 4

Location Code KAFB-106MW1-I

Sample Number 106MW1I-P1P-112817

Sampling Method Low Flow

Sample Type Grab

QC Code Normal

Sampling Equipment Bladder Pump

QC Partners None

RFA/COC Number 500433EDBPT-GW016

Collection Date 11/28/17

Collection Time 0940

Start Depth 513

End Depth 523

Sample Matrix GW

Sample Team CL, TK

Containers:

Analytical Suite	Filtered	Qty	Size	Container Type	Preservative	Lab
EDB by 8011	NA	2	40 mL	VOA Vials	None	Empirical
VOCs by 8260	NA	3	40 mL	VOA Vials	HCl	Empirical
Nitrate by EPA 353.2	NA	1	250 mL	Poly Bottle	H2SO4	Empirical
O-Phosphate by SM4500 PE	NA	1	250 mL	Poly Bottle	None	Empirical
Dissolved Fe and Mn by 6010	Yes	1	250 mL	Poly Bottle	HNO3	Empirical
Alkalinity by SM2320B Anions (Chloride, Sulfate, Bromide) by EPA 300	NA	1	250 mL	Poly Bottle	None	Empirical
Iodide by EPA 300	NA	1	100 mL	Poly Bottle	None	Test America
Reduced Gases by RSKSOP-175/EPA 3810	NA	2	40 mL	VOA Vials	HCl	CB&I
VFA by EPA 300m	NA	2	40 mL	VOA Vials	None	CB&I
QuantArray-Chlor	NA	1	1 L	Poly Bottle	None	Microbial Insights
Fluorescein	NA	1	20 mL	VOA Vials	None	Crawford
Hydrogen/H2O Isotope Ratio	NA	1	60 mL	VOA Vials	None	USGS
~~EDB CSIA~~	~~NA~~	~~2~~	~~1 L~~	~~Amber Bottle~~	~~HCl~~	~~University of Oklahom~~

Comments/Descriptions: Cannot measure DTW in 3" wells when pump is installed.

Logged By/Date: CL Fallee 11/28/17

Reviewed By/Date: _____

Sample Collection Log

500433 KAFB Rapid Response ESTCP – Groundwater, Phase I, Passive, Week 4

Location Code KAFB-106063

Sample Number 106063-P1P-112817

Sampling Method low-flow

Sample Type grab

QC Code normal

Sampling Equipment bladder pump

QC Partners none

RFA/COC Number 500433EDBPT-GW016

Collection Date 11/28/17

Collection Time 1012

Start Depth 508

End Depth 523

Sample Matrix GW

Sample Team TK

Containers:

Analytical Suite	Filtered	Qty	Size	Container Type	Preservative	Lab
EDB by 8011	NA	2	40 mL	VOA Vials	None	Empirical
VOCs by 8260	NA	3	40 mL	VOA Vials	HCl	Empirical
Nitrate by EPA 353.2	NA	1	250 mL	Poly Bottle	H2SO4	Empirical
O-Phosphate by SM4500 PE	NA	1	250 mL	Poly Bottle	None	Empirical
Dissolved Fe and Mn by 6010	Yes	1	250 mL	Poly Bottle	HNO3	Empirical
Alkalinity by SM2320B Anions (Chloride, Sulfate, Bromide) by EPA 300	NA	1	250 mL	Poly Bottle	None	Empirical
Iodide by EPA 300	NA	1	100 mL	Poly Bottle	None	Test America
Reduced Gases by RSKSOP-175/EPA 3810	NA	2	40 mL	VOA Vials	HCl	CB&I
VFA by EPA 300m	NA	2	40 mL	VOA Vials	None	CB&I
QuantArray-Chlor	NA	1	1 L	Poly Bottle	None	Microbial Insights
Fluorescein	NA	1	20 mL	VOA Vials	None	Crawford
Hydrogen/H2O Isotope Ratio	NA	1	60 mL	VOA Vials	None	USGS
~~EDB CSIA~~ TSK	~~NA~~	~~2~~	~~1 L~~	~~Amber Bottle~~	~~HCl~~	~~University of Oklahom~~

Comments/Descriptions: not done on intermediate wells

Logged By/Date: [signature] 11/28/17 Reviewed By/Date: _____

Sample Collection Log

500433 KAFB Rapid Response ESTCP – Groundwater, Phase I, Passive, Week 4

Location Code KAFB-106064

Sample Number 106064-P1P-112817

Sampling Method low-flow

Sample Type grab

QC Code normal

Sampling Equipment bladder pump

QC Partners none

RFA/COC Number 500433EDBPT-GW016

Collection Date 11/28/17

Collection Time 1212

Start Depth 488

End Depth 508

Sample Matrix GW

Sample Team TK

Containers:

Analytical Suite	Filtered	Qty	Size	Container Type	Preservative	Lab
EDB by 8011	NA	2	40 mL	VOA Vials	None	Empirical
VOCs by 8260	NA	3	40 mL	VOA Vials	HCl	Empirical
Nitrate by EPA 353.2	NA	1	250 mL	Poly Bottle	H2SO4	Empirical
O-Phosphate by SM4500 PE	NA	1	250 mL	Poly Bottle	None	Empirical
Dissolved Fe and Mn by 6010	Yes	1	250 mL	Poly Bottle	HNO3	Empirical
Alkalinity by SM2320B Anions (Chloride, Sulfate, Bromide) by EPA 300	NA	1	250 mL	Poly Bottle	None	Empirical
Iodide by EPA 300	NA	1	100 mL	Poly Bottle	None	Test America
Reduced Gases by RSKSOP-175/EPA 3810	NA	2	40 mL	VOA Vials	HCl	CB&I
VFA by EPA 300m	NA	2	40 mL	VOA Vials	None	CB&I
QuantArray-Chlor	NA	1	1 L	Poly Bottle	None	Microbial Insights
Fluorescein	NA	1	20 mL	VOA Vials	None	Crawford
Hydrogen/H2O Isotope Ratio	NA	1	60 mL	VOA Vials	None	USGS
EDB CSIA	NA	2	1 L	Amber Bottle	HCl	University of Oklahom

Comments/Descriptions.

Logged By/Date: [signature] 11/28/17

Reviewed By/Date: _____

Sample Collection Log

500433 KAFB Rapid Response ESTCP – Groundwater, Phase I, Passive, Week 4

Location Code KAFB-106EX1

Sample Number 106EX1-P1P-112917

Sampling Method conveyance pipe

Sample Type grab

QC Code normal

Sampling Equipment sample port, grundfos pump

QC Partners none

RFA/COC Number 500433EDBPT-GW017

Collection Date 11/29/17

Collection Time 1245

Start Depth 487

End Depth 502

Sample Matrix GW

Sample Team TK, CL

Containers:

Analytical Suite	Filtered	Qty	Size	Container Type	Preservative	Lab
EDB by 8011	NA	2	40 mL	VOA Vials	None	Empirical
VOCs by 8260	NA	3	40 mL	VOA Vials	HCl	Empirical
Nitrate by EPA 353.2	NA	1	250 mL	Poly Bottle	H2SO4	Empirical
O-Phosphate by SM4500 PE	NA	1	250 mL	Poly Bottle	None	Empirical
Dissolved Fe and Mn by 6010	Yes	1	250 mL	Poly Bottle	HNO3	Empirical
Alkalinity by SM2320B Anions (Chloride, Sulfate, Bromide) by EPA 300	NA	1	250 mL	Poly Bottle	None	Empirical
Iodide by EPA 300	NA	1	100 mL	Poly Bottle	None	Test America
Reduced Gases by RSKSOP-175/EPA 3810	NA	2	40 mL	VOA Vials	HCl	CB&I
VFA by EPA 300m	NA	2	40 mL	VOA Vials	None	CB&I
QuantArray-Chlor	NA	1	1 L	Poly Bottle	None	Microbial Insights
Fluorescein	NA	1	20 mL	VOA Vials	None	Crawford
Hydrogen/H2O Isotope Ratio	NA	1	60 mL	VOA Vials	None	USGS
EDB CSIA	NA	2	1 L	Amber Bottle	HCl	University of Oklahom

Comments/Descriptions.

Logged By/Date: [signature] 11/29/17 ***Reviewed By/Date:***

Sample Collection Log

500433 KAFB Rapid Response ESTCP – Groundwater, Phase I, Passive, Week 4

Location Code KAFB-106MW2-I

RFA/COC Number 500433-EDBPT-GW017

Sample Number 106MW2I-P1P-112917

Collection Date 11/29/17

Sampling Method low-flow

Collection Time 0931

Sample Type grab

Start Depth 513

QC Code ~~normal~~ TSK FD

End Depth 523

Sampling Equipment bladder pump

Sample Matrix GW

QC Partners ~~KAFB-106MW2-I~~ TSK 106MW2I-P1P-112917-FD

Sample Team TK, CC

Containers:

Analytical Suite	Filtered	Qty	Size	Container Type	Preservative	Lab
EDB by 8011	NA	2	40 mL	VOA Vials	None	Empirical
VOCs by 8260	NA	3	40 mL	VOA Vials	HCl	Empirical
Nitrate by EPA 353.2	NA	1	250 mL	Poly Bottle	H2SO4	Empirical
O-Phosphate by SM4500 PE	NA	1	250 mL	Poly Bottle	None	Empirical
Dissolved Fe and Mn by 6010	Yes	1	250 mL	Poly Bottle	HNO3	Empirical
Alkalinity by SM2320B Anions (Chloride, Sulfate, Bromide) by EPA 300	NA	1	250 mL	Poly Bottle	None	Empirical
Iodide by EPA 300	NA	1	100 mL	Poly Bottle	None	Test America
Reduced Gases by RSKSOP-175/EPA 3810	NA	2	40 mL	VOA Vials	HCl	CB&I
VFA by EPA 300m	NA	2	40 mL	VOA Vials	None	CB&I
† QuantArray-Chlor	NA	1	1 L	Poly Bottle	None	Microbial Insights
Fluorescein	NA	1	20 mL	VOA Vials	None	Crawford
Hydrogen/H2O Isotope Ratio	NA	1	60 mL	VOA Vials	None	USGS
~~* EDB CSIA~~	~~NA~~	~~2~~	~~1 L~~	~~Amber Bottle~~	~~HCl~~	~~University of Oklahom~~

Comments/Descriptions: † FD collected for all but microbial

* Not collected at intermediate well

Logged By/Date: [signature] 11/29/17

Reviewed By/Date: _____

Sample Collection Log

500433 KAFB Rapid Response ESTCP – Groundwater, Phase I, Passive, Week 4

Location Code KAFB-106IN1

Sample Number 106IN1-P1P-112917

Sampling Method sample port/conveyance piping

Sample Type grab

QC Code normal

Sampling Equipment sample port/grundfos 2HP

QC Partners none

RFA/COC Number 500433EDBPT-GW017

Collection Date 11/29/17

Collection Time 1057

Start Depth 477

End Depth 497

Sample Matrix GW

Sample Team TK, CL

Containers:

Analytical Suite	Filtered	Qty	Size	Container Type	Preservative	Lab
EDB by 8011	NA	2	40 mL	VOA Vials	None	Empirical
VOCs by 8260	NA	3	40 mL	VOA Vials	HCl	Empirical
Nitrate by EPA 353.2	NA	1	250 mL	Poly Bottle	H2SO4	Empirical
O-Phosphate by SM4500 PE	NA	1	250 mL	Poly Bottle	None	Empirical
Dissolved Fe and Mn by 6010	Yes	1	250 mL	Poly Bottle	HNO3	Empirical
Alkalinity by SM2320B Anions (Chloride, Sulfate, Bromide) by EPA 300	NA	1	250 mL	Poly Bottle	None	Empirical
Iodide by EPA 300	NA	1	100 mL	Poly Bottle	None	Test America
Reduced Gases by RSKSOP-175/EPA 3810	NA	2	40 mL	VOA Vials	HCl	CB&I
VFA by EPA 300m	NA	2	40 mL	VOA Vials	None	CB&I
QuantArray-Chlor	NA	1	1 L	Poly Bottle	None	Microbial Insights
Fluorescein	NA	1	20 mL	VOA Vials	None	Crawford
Hydrogen/H2O Isotope Ratio	NA	1	60 mL	VOA Vials	None	USGS
EDB CSIA	NA	2	1 L	Amber Bottle	HCl	University of Oklahom

Comments/Descriptions.

Logged By/Date: [signature] 11/29/17

Reviewed By/Date: _____

Sample Collection Log

500433 KAFB Rapid Response ESTCP – Groundwater, Phase I, Passive, Week 4

Location Code KAFB-106EX2

Sample Number 106EX2-P1P-112917

Sampling Method Conveyance pipe/ sample port

Sample Type grab

QC Code normal

Sampling Equipment sample port, grundfos pump

QC Partners none

RFA/COC Number 500433EDBPT-GW017

Collection Date 11/29/17

Collection Time 1327

Start Depth 487

End Depth 502

Sample Matrix GW

Sample Team TK, CL

Containers:

Analytical Suite	Filtered	Qty	Size	Container Type	Preservative	Lab
EDB by 8011	NA	2	40 mL	VOA Vials	None	Empirical
VOCs by 8260	NA	3	40 mL	VOA Vials	HCl	Empirical
Nitrate by EPA 353.2	NA	1	250 mL	Poly Bottle	H2SO4	Empirical
O-Phosphate by SM4500 PE	NA	1	250 mL	Poly Bottle	None	Empirical
Dissolved Fe and Mn by 6010	Yes	1	250 mL	Poly Bottle	HNO3	Empirical
Alkalinity by SM2320B Anions (Chloride, Sulfate, Bromide) by EPA 300	NA	1	250 mL	Poly Bottle	None	Empirical
Iodide by EPA 300	NA	1	100 mL	Poly Bottle	None	Test America
Reduced Gases by RSKSOP-175/EPA 3810	NA	2	40 mL	VOA Vials	HCl	CB&I
VFA by EPA 300m	NA	2	40 mL	VOA Vials	None	CB&I
QuantArray-Chlor	NA	1	1 L	Poly Bottle	None	Microbial Insights
Fluorescein	NA	1	20 mL	VOA Vials	None	Crawford
Hydrogen/H2O Isotope Ratio	NA	1	60 mL	VOA Vials	None	USGS
EDB CSIA	NA	2	1 L	Amber Bottle	HCl	University of Oklahom

Comments/Descriptions.

Logged By/Date: [illegible] 11/29/17 ***Reviewed By/Date:***

Sample Collection Log

500433 KAFB Rapid Response ESTCP – Groundwater, Phase II, Recirculation

Location Code KAFB-106IN1

RFA/COC Number 500433EDBPT-GW018

Sample Number 106IN1-P2R-010218-02

Collection Date 1/2/18

Sampling Method Sample Port

Collection Time 1427

Sample Type Grab

Start Depth —

QC Code Normal

End Depth —

Sampling Equipment Tubing

Sample Matrix GW

QC Partners None

Sample Team CL, TK

Containers:

Analytical Suite	Filtered	Qty	Size	Container Type	Preservative	Lab
Iodide by EPA 300	NA	1	250 mL	Poly Bottle	None	Test America
VFAs by EPA 300m	NA	2	40mL	VOA Vial	None	CBI

Comments/Descriptions.

Second Sample Collected during chem pump on cycle. Sample collected after 225 gallons of diluted mixture was added to the tank (480-485 gallons total in tank).

Logged By/Date: 1/2/18

Reviewed By/Date:

Sample Collection Log

500433 KAFB Rapid Response ESTCP – Groundwater, Phase II, Recirculation

Location Code KAFB-1061N1

Sample Number 1061N1-P2R-010218-01

Sampling Method Sample Port

Sample Type Grab

QC Code Normal

Sampling Equipment Tubing

QC Partners None

RFA/COC Number 500433EDBPT-GW018

Collection Date 1/2/18

Collection Time 1053

Start Depth —

End Depth —

Sample Matrix GW

Sample Team CL, TK

Containers:

Analytical Suite	Filtered	Qty	Size	Container Type	Preservative	Lab
Iodide by EPA 300	NA	1	250 mL	Poly Bottle	None	Test America

Comments/Descriptions: Sampled during chem pump "on cycle" – pumping @ 0.83 sec/pulse. Chem pump has been running/injecting since 12/29 ~ 8:00am Has injected approx. 175 gallons of amendment.

Logged By/Date: 1/2/18

Reviewed By/Date:

Sample Collection Log

500433 KAFB Rapid Response ESTCP – Groundwater, Phase II, Recirculation

Location Code KAFB-106MW2I

RFA/COC Number 500433EDBPT-GW019

Sample Number 106MW2I-P2R-010918

Collection Date 1/9/18

Sampling Method low-flow

Collection Time 1355

Sample Type grab

Start Depth 513

QC Code normal

End Depth 523

Sampling Equipment bladder pump

Sample Matrix GW

QC Partners none

Sample Team TK

Containers:

Analytical Suite	Filtered	Qty	Size	Container Type	Preservative	Lab
EDB by 8011	NA	2	40 mL	VOA Vials	None	Empirical
VOCs by 8260	NA	3	40 mL	VOA Vials	HCl	Empirical
Nitrate by EPA 353.2	NA	1	250 mL	Poly Bottle	H2SO4	Empirical
O-Phosphate by SM4500 PE	Yes	1	250 mL	Poly Bottle	None	Empirical
Dissolved Fe and Mn by 6010	Yes	1	250 mL	Poly Bottle	HNO3	Empirical
Alkalinity by SM2320B Anions (Chloride, Sulfate, Bromide) by EPA 9056	NA	1	250 mL	Poly Bottle	None	Empirical
Iodide by EPA 300	NA	1	250 mL	Poly Bottle	None	Test America
Reduced Gases by RSKSOP-175/EPA 3810	NA	2	40 mL	VOA Vials	HCl	CB&I
VFA by EPA 300m	NA	2	40 mL	VOA Vials	None	CB&I

Comments/Descriptions:

Logged By/Date: [signature] 1/9/18

Reviewed By/Date: _____

Sample Collection Log

500433 KAFB Rapid Response ESTCP – Groundwater, Phase II, Recirculation

Location Code KAFB-106MW2S

RFA/COC Number 500433EDBPT-GW019

Sample Number 106MW2S-P2R-010918

Collection Date 1/9/18

Sampling Method low-flow

Collection Time 1046

Sample Type grab

Start Depth 463

QC Code normal

End Depth 498

Sampling Equipment bladder pump

Sample Matrix GW

QC Partners none

Sample Team TK

Containers:

Analytical Suite	Filtered	Qty	Size	Container Type	Preservative	Lab
EDB by 8011	NA	2	40 mL	VOA Vials	None	Empirical
VOCs by 8260	NA	3	40 mL	VOA Vials	HCl	Empirical
Nitrate by EPA 353.2	NA	1	250 mL	Poly Bottle	H2SO4	Empirical
O-Phosphate by SM4500 PE	Yes	1	250 mL	Poly Bottle	None	Empirical
Dissolved Fe and Mn by 6010	Yes	1	250 mL	Poly Bottle	HNO3	Empirical
Alkalinity by SM2320B Anions (Chloride, Sulfate, Bromide) by EPA 9056	NA	1	250 mL	Poly Bottle	None	Empirical
Iodide by EPA 300	NA	1	250 mL	Poly Bottle	None	Test America
Reduced Gases by RSKSOP-175/EPA 3810	NA	2	40 mL	VOA Vials	HCl	CB&I
VFA by EPA 300m	NA	2	40 mL	VOA Vials	None	CB&I

Comments/Descriptions.

Water has a slight sewage smell to it.

Logged By/Date: [signature] 1/9/18

Reviewed By/Date:

Sample Collection Log

* Week 2 event

500433 KAFB Rapid Response ESTCP – Groundwater, Phase II, Recirculation

Location Code: KAFB-106MW1-I

RFA/COC Number: 500433EDBPT-GW019

Sample Number: 106MW1I-P2R-010918

Collection Date: 1/9/18

Sampling Method: Low Flow

Collection Time: 1117

Sample Type: Grab

Start Depth: 513

QC Code: Normal

End Depth: 523

Sampling Equipment: Bladder Pump

Sample Matrix: GW

QC Partners: None

Sample Team: CL

Containers:

Analytical Suite	Filtered	Qty	Size	Container Type	Preservative	Lab
EDB by 8011	NA	2	40 mL	VOA Vials	None	Empirical
VOCs by 8260	NA	3	40 mL	VOA Vials	HCl	Empirical
Nitrate by EPA 353.2	NA	1	250 mL	Poly Bottle	H2SO4	Empirical
O-Phosphate by SM4500 PE	Yes	1	250 mL	Poly Bottle	None	Empirical
Dissolved Fe and Mn by 6010	Yes	1	250 mL	Poly Bottle	HNO3	Empirical
Alkalinity by SM2320B Anions (Chloride, Sulfate, Bromide) by EPA 9056	NA	1	250 mL	Poly Bottle	None	Empirical
Iodide by EPA 300	NA	1	250 mL	Poly Bottle	None	Test America
Reduced Gases by RSKSOP-175/EPA 3810	NA	2	40 mL	VOA Vials	HCl	CB&I
VFA by EPA 300m	NA	2	40 mL	VOA Vials	None	CB&I

Comments/Descriptions: WL cannot be measured at this well – cannot fit down 3" casing w/ tubing. Water is clear w/ no odor.

Logged By/Date: [signature] 1/9/18

Reviewed By/Date:

Sample Collection Log

500433 KAFB Rapid Response ESTCP – Groundwater, Phase II, Recirculation

Location Code KAFB-106MW1-S

RFA/COC Number 500433EDBPT-GW019

Sample Number 106MW1S-P2R-010918

Collection Date 1/9/18

Sampling Method Low Flow

Collection Time ~~1310~~ 1410 a

Sample Type Grab

Start Depth 463

QC Code Normal

End Depth 498

Sampling Equipment Bladder Pump

Sample Matrix GW

QC Partners None

Sample Team CL

Containers:

Analytical Suite	Filtered	Qty	Size	Container Type	Preservative	Lab
EDB by 8011	NA	2	40 mL	VOA Vials	None	Empirical
VOCs by 8260	NA	3	40 mL	VOA Vials	HCl	Empirical
Nitrate by EPA 353.2	NA	1	250 mL	Poly Bottle	H2SO4	Empirical
O-Phosphate by SM4500 PE	Yes	1	250 mL	Poly Bottle	None	Empirical
Dissolved Fe and Mn by 6010	Yes	1	250 mL	Poly Bottle	HNO3	Empirical
Alkalinity by SM2320B Anions (Chloride, Sulfate, Bromide) by EPA 9056	NA	1	250 mL	Poly Bottle	None	Empirical
Iodide by EPA 300	NA	1	250 mL	Poly Bottle	None	Test America
Reduced Gases by RSKSOP-175/EPA 3810	NA	2	40 mL	VOA Vials	HCl	CB&I
VFA by EPA 300m	NA	2	40 mL	VOA Vials	None	CB&I

Comments/Descriptions: DTW = 474.55 ft btoc. Nomeasurable LNAPL. Water has slight yellow tint and smells like fuel and fouling.

Logged By/Date: 1/9/18

Reviewed By/Date:

Sample Collection Log

500433 KAFB Rapid Response ESTCP – Groundwater, Phase II, Recirculation

Location Code KAFB-106EX1

RFA/COC Number 500433EDBPT-GW020

Sample Number 106EX1-P2R-011018

Collection Date 1/10/18

Sampling Method Sample port

Collection Time 1031

Sample Type grab

Start Depth 487

QC Code normal

End Depth 502

Sampling Equipment conveyance piping/port

Sample Matrix GW

QC Partners none

Sample Team TK CL

Containers:

Analytical Suite	Filtered	Qty	Size	Container Type	Preservative	Lab
EDB by 8011	NA	2	40 mL	VOA Vials	None	Empirical
VOCs by 8260	NA	3	40 mL	VOA Vials	HCl	Empirical
Nitrate by EPA 353.2	NA	1	250 mL	Poly Bottle	H2SO4	Empirical
O-Phosphate by SM4500 PE	Yes	1	250 mL	Poly Bottle	None	Empirical
Dissolved Fe and Mn by 6010	Yes	1	250 mL	Poly Bottle	HNO3	Empirical
Alkalinity by SM2320B Anions (Chloride, Sulfate, Bromide) by EPA 9056	NA	1	250 mL	Poly Bottle	None	Empirical
Iodide by EPA 300	NA	1	250 mL	Poly Bottle	None	Test America
Reduced Gases by RSKSOP-175/EPA 3810	NA	2	40 mL	VOA Vials	HCl	CB&I
VFA by EPA 300m	NA	2	40 mL	VOA Vials	None	CB&I

Comments/Descriptions.

Logged By/Date: [signature] 1/10/18

Reviewed By/Date: _____

Sample Collection Log

500433 KAFB Rapid Response ESTCP – Groundwater, Phase II, Recirculation

Location Code KAFB-106EX2

RFA/COC Number 500433EDBPT-GW020

Sample Number 106EX2-P2R-011018

Collection Date 1/10/18

Sampling Method Conveyance piping

Collection Time 1107

Sample Type grab

Start Depth 487

QC Code normal

End Depth 502

Sampling Equipment piping

Sample Matrix GW

QC Partners 106EX2-P2R-011018-FD

Sample Team TK, CL

Containers:

Analytical Suite	Filtered	Qty	Size	Container Type	Preservative	Lab
EDB by 8011	NA	2	40 mL	VOA Vials	None	Empirical
VOCs by 8260	NA	3	40 mL	VOA Vials	HCl	Empirical
Nitrate by EPA 353.2	NA	1	250 mL	Poly Bottle	H2SO4	Empirical
O-Phosphate by SM4500 PE	Yes	1	250 mL	Poly Bottle	None	Empirical
Dissolved Fe and Mn by 6010	Yes	1	250 mL	Poly Bottle	HNO3	Empirical
Alkalinity by SM2320B Anions (Chloride, Sulfate, Bromide) by EPA 9056	NA	1	250 mL	Poly Bottle	None	Empirical
Iodide by EPA 300	NA	1	250 mL	Poly Bottle	None	Test America
Reduced Gases by RSKSOP-175/EPA 3810	NA	2	40 mL	VOA Vials	HCl	CB&I
VFA by EPA 300m	NA	2	40 mL	VOA Vials	None	CB&I

Comments/Descriptions.

field duplicate collected

Logged By/Date: [signature] 1/10/18

Reviewed By/Date: _____

Sample Collection Log

500433 KAFB Rapid Response ESTCP – Groundwater, Phase II, Recirculation

Location Code KAFB-106063

RFA/COC Number 500433EDBPT-GW020

Sample Number 106063-P2R-011018

Collection Date 1/10/18

Sampling Method low flow

Collection Time 1443

Sample Type grab

Start Depth 508

QC Code normal

End Depth 523

Sampling Equipment bladder pump

Sample Matrix GW

QC Partners none

Sample Team TK

Containers:

Analytical Suite	Filtered	Qty	Size	Container Type	Preservative	Lab
EDB by 8011	NA	2	40 mL	VOA Vials	None	Empirical
VOCs by 8260	NA	3	40 mL	VOA Vials	HCl	Empirical
Nitrate by EPA 353.2	NA	1	250 mL	Poly Bottle	H2SO4	Empirical
O-Phosphate by SM4500 PE	Yes	1	250 mL	Poly Bottle	None	Empirical
Dissolved Fe and Mn by 6010	Yes	1	250 mL	Poly Bottle	HNO3	Empirical
Alkalinity by SM2320B Anions (Chloride, Sulfate, Bromide) by EPA 9056	NA	1	250 mL	Poly Bottle	None	Empirical
Iodide by EPA 300	NA	1	250 mL	Poly Bottle	None	Test America
Reduced Gases by RSKSOP-175/EPA 3810	NA	2	40 mL	VOA Vials	HCl	CB&I
VFA by EPA 300m	NA	2	40 mL	VOA Vials	None	CB&I

Comments/Descriptions.

Logged By/Date: [signature] 1/10/18

Reviewed By/Date: _____

Sample Collection Log

500433 KAFB Rapid Response ESTCP – Groundwater, Phase II, Recirculation

Location Code KAFB-106IN1

Sample Number 106IN1-RR-011018-03

Sampling Method Sample Port

Sample Type Grab

QC Code Normal

Sampling Equipment Tubing

QC Partners None

RFA/COC Number 500433EDBPT-GW020

Collection Date 1/10/18

Collection Time 0955

Start Depth NA

End Depth NA

Sample Matrix GW

Sample Team CITK

Containers:

Analytical Suite	Filtered	Qty	Size	Container Type	Preservative	Lab
Iodide by EPA 300	NA	1	250 mL	Poly Bottle	None	Test America
VFAs by EPA 300m	NA	2	40 mL	VOA Vials	None	CBI

Comments/Descriptions. Sample collected from IN1 port w/ pump off – Sample of combined extraction well effluent w/ amendments. Third sample collected from IN1 during Phase 2 Recirculation

Logged By/Date: [signature] 1/10/18

Reviewed By/Date:

Sample Collection Log

500433 KAFB Rapid Response ESTCP – Groundwater, Phase II, Recirculation

Location Code KAFB-106064

RFA/COC Number 500433EDBPT-GW020

Sample Number 106064-P2R-011018

Collection Date 1/10/18

Sampling Method Low Flow

Collection Time 1340

Sample Type Grab

Start Depth 488

QC Code Normal

End Depth 508

Sampling Equipment Bladder Pump

Sample Matrix GW

QC Partners None

Sample Team CL

Containers:

Analytical Suite	Filtered	Qty	Size	Container Type	Preservative	Lab
EDB by 8011	NA	2	40 mL	VOA Vials	None	Empirical
VOCs by 8260	NA	3	40 mL	VOA Vials	HCl	Empirical
Nitrate by EPA 353.2	NA	1	250 mL	Poly Bottle	H2SO4	Empirical
O-Phosphate by SM4500 PE	Yes	1	250 mL	Poly Bottle	None	Empirical
Dissolved Fe and Mn by 6010	Yes	1	250 mL	Poly Bottle	HNO3	Empirical
Alkalinity by SM2320B Anions (Chloride, Sulfate, Bromide) by EPA 9056	NA	1	250 mL	Poly Bottle	None	Empirical
Iodide by EPA 300	NA	1	250 mL	Poly Bottle	None	Test America
Reduced Gases by RSKSOP-175/EPA 3810	NA	2	40 mL	VOA Vials	HCl	CB&I
VFA by EPA 300m	NA	2	40 mL	VOA Vials	None	CB&I

Comments/Descriptions: Week 2 event. DTW= 477.63 ft btoc
Water is clear w/ fuel and fouling odor.

Logged By/Date: [signature] 1/10/18

Reviewed By/Date: _____

Sample Collection Log

500433 KAFB Rapid Response ESTCP – Groundwater, Phase II, Recirculation

Location Code KAFB-106MW1-I

RFA/COC Number 500433EDBPT-GW021

Sample Number 106MW1I-P2R-011618

Collection Date 1/16/18

Sampling Method Low Flow

Collection Time 1035

Sample Type Grab

Start Depth 513

QC Code Normal

End Depth 523

Sampling Equipment Bladder Pump

Sample Matrix GW

QC Partners N/A

Sample Team CL

Containers:

Analytical Suite	Filtered	Qty	Size	Container Type	Preservative	Lab
EDB by 8011	NA	2	40 mL	VOA Vials	None	Empirical
VOCs by 8260	NA	3	40 mL	VOA Vials	HCl	Empirical
Nitrate by EPA 353.2	NA	1	250 mL	Poly Bottle	H2SO4	Empirical
O-Phosphate by SM4500 PE	Yes	1	250 mL	Poly Bottle	None	Empirical
Dissolved Fe and Mn by 6010	Yes	1	250 mL	Poly Bottle	HNO3	Empirical
Alkalinity by SM2320B Anions (Chloride, Sulfate, Bromide) by EPA 9056	NA	1	250 mL	Poly Bottle	None	Empirical
Iodide by EPA 300	NA	1	250 mL	Poly Bottle	None	Test America
Reduced Gases by RSKSOP-175/EPA 3810	NA	2	40 mL	VOA Vials	HCl	CB&I
VFA by EPA 300m	NA	2	40 mL	VOA Vials	None	CB&I

Comments/Descriptions.
Week 3 event. DTW cannot be measured in 3" wells.

Logged By/Date: [signature] 1/16/18

Reviewed By/Date:

Sample Collection Log

500433 KAFB Rapid Response ESTCP – Groundwater, Phase II, Recirculation

Location Code KAFB-106EX1

RFA/COC Number 500433EDBPT-GW021

Sample Number 106EX1-P2R-011618

Collection Date 1/16/18

Sampling Method conveyance piping

Collection Time 1155

Sample Type grab

Start Depth 487

QC Code normal

End Depth 502

Sampling Equipment piping/port

Sample Matrix GW

QC Partners 106EX1-P2R-011618-FD

Sample Team TK, CL

Containers:

Analytical Suite	Filtered	Qty	Size	Container Type	Preservative	Lab
EDB by 8011	NA	2	40 mL	VOA Vials	None	Empirical
VOCs by 8260	NA	3	40 mL	VOA Vials	HCl	Empirical
Nitrate by EPA 353.2	NA	1	250 mL	Poly Bottle	H2SO4	Empirical
O-Phosphate by SM4500 PE	Yes	1	250 mL	Poly Bottle	None	Empirical
Dissolved Fe and Mn by 6010	Yes	1	250 mL	Poly Bottle	HNO3	Empirical
Alkalinity by SM2320B Anions (Chloride, Sulfate, Bromide) by EPA 9056	NA	1	250 mL	Poly Bottle	None	Empirical
Iodide by EPA 300	NA	1	250 mL	Poly Bottle	None	Test America
Reduced Gases by RSKSOP-175/EPA 3810	NA	2	40 mL	VOA Vials	HCl	CB&I
VFA by EPA 300m	NA	2	40 mL	VOA Vials	None	CB&I

Comments/Descriptions.

FD collected

Logged By/Date: [signature] 1/16/18

Reviewed By/Date: _____

Sample Collection Log

500433 KAFB Rapid Response ESTCP – Groundwater, Phase II, Recirculation

Location Code KAFB-106MW15

RFA/COC Number 500433EDBPT-GW021

Sample Number 106MW15-P2R-011618

Collection Date 1/16/18

Sampling Method low-flow

Collection Time 0950

Sample Type grab

Start Depth 463

QC Code normal

End Depth 498

Sampling Equipment bladder pump

Sample Matrix GW

QC Partners none

Sample Team TK

Containers:

Analytical Suite	Filtered	Qty	Size	Container Type	Preservative	Lab
EDB by 8011	NA	2	40 mL	VOA Vials	None	Empirical
VOCs by 8260	NA	3	40 mL	VOA Vials	HCl	Empirical
Nitrate by EPA 353.2	NA	1	250 mL	Poly Bottle	H2SO4	Empirical
O-Phosphate by SM4500 PE	Yes	1	250 mL	Poly Bottle	None	Empirical
Dissolved Fe and Mn by 6010	Yes	1	250 mL	Poly Bottle	HNO3	Empirical
Alkalinity by SM2320B Anions (Chloride, Sulfate, Bromide) by EPA 9056	NA	1	250 mL	Poly Bottle	None	Empirical
Iodide by EPA 300	NA	1	250 mL	Poly Bottle	None	Test America
Reduced Gases by RSKSOP-175/EPA 3810	NA	2	40 mL	VOA Vials	HCl	CB&I
VFA by EPA 300m	NA	2	40 mL	VOA Vials	None	CB&I

Comments/Descriptions.

Logged By/Date: [signature] 1/16/18

Reviewed By/Date:

Sample Collection Log

500433 KAFB Rapid Response ESTCP – Groundwater, Phase II, Recirculation

Location Code 106EX2-RR-011618

RFA/COC Number 500433EDBPT-GW021

Sample Number KAFB-106EX2

Collection Date 1/16/18

Sampling Method conveyance piping

Collection Time 1255

Sample Type grab

Start Depth 487

QC Code normal

End Depth 502

Sampling Equipment piping/port

Sample Matrix GW

QC Partners None

Sample Team TK, CL

Containers:

Analytical Suite	Filtered	Qty	Size	Container Type	Preservative	Lab
EDB by 8011	NA	2	40 mL	VOA Vials	None	Empirical
VOCs by 8260	NA	3	40 mL	VOA Vials	HCl	Empirical
Nitrate by EPA 353.2	NA	1	250 mL	Poly Bottle	H2SO4	Empirical
O-Phosphate by SM4500 PE	Yes	1	250 mL	Poly Bottle	None	Empirical
Dissolved Fe and Mn by 6010	Yes	1	250 mL	Poly Bottle	HNO3	Empirical
Alkalinity by SM2320B Anions (Chloride, Sulfate, Bromide) by EPA 9056	NA	1	250 mL	Poly Bottle	None	Empirical
Iodide by EPA 300	NA	1	250 mL	Poly Bottle	None	Test America
Reduced Gases by RSKSOP-175/EPA 3810	NA	2	40 mL	VOA Vials	HCl	CB&I
VFA by EPA 300m	NA	2	40 mL	VOA Vials	None	CB&I

Comments/Descriptions.

Logged By/Date: [signature] 1/16/18

Reviewed By/Date: _____

Sample Collection Log

500433 KAFB Rapid Response ESTCP – Groundwater, Phase II, Recirculation

Location Code KAFB-106MW2I

RFA/COC Number 500433EDBPT-GW022

Sample Number 106MW2I-P2R-011818

Collection Date 1/18/18

Sampling Method low flow

Collection Time 1400

Sample Type grab

Start Depth 513

QC Code normal

End Depth 523

Sampling Equipment bladder pump

Sample Matrix GW

QC Partners none

Sample Team TK

Containers:

Analytical Suite	Filtered	Qty	Size	Container Type	Preservative	Lab
EDB by 8011	NA	2	40 mL	VOA Vials	None	Empirical
VOCs by 8260	NA	3	40 mL	VOA Vials	HCl	Empirical
Nitrate by EPA 353.2	NA	1	250 mL	Poly Bottle	H2SO4	Empirical
O-Phosphate by SM4500 PE	Yes	1	250 mL	Poly Bottle	None	Empirical
Dissolved Fe and Mn by 6010	Yes	1	250 mL	Poly Bottle	HNO3	Empirical
Alkalinity by SM2320B Anions (Chloride, Sulfate, Bromide) by EPA 9056	NA	1	250 mL	Poly Bottle	None	Empirical
Iodide by EPA 300	NA	1	250 mL	Poly Bottle	None	Test America
Reduced Gases by RSKSOP-175/EPA 3810	NA	2	40 mL	VOA Vials	HCl	CB&I
VFA by EPA 300m	NA	2	40 mL	VOA Vials	None	CB&I

Comments/Descriptions.

Logged By/Date: [signature] 1/18/18

Reviewed By/Date: _____

Sample Collection Log

500433 KAFB Rapid Response ESTCP – Groundwater, Phase II, Recirculation

Location Code KAFB-106063

RFA/COC Number 500433EDBPT-GW022

Sample Number 106063-P2R-011818

Collection Date 1/18/18

Sampling Method low flow

Collection Time 1151

Sample Type grab

Start Depth 508

QC Code normal

End Depth 523

Sampling Equipment bladder pump

Sample Matrix GW

QC Partners none

Sample Team TK

Containers:

Analytical Suite	Filtered	Qty	Size	Container Type	Preservative	Lab
EDB by 8011	NA	2	40 mL	VOA Vials	None	Empirical
VOCs by 8260	NA	3	40 mL	VOA Vials	HCl	Empirical
Nitrate by EPA 353.2	NA	1	250 mL	Poly Bottle	H2SO4	Empirical
O-Phosphate by SM4500 PE	Yes	1	250 mL	Poly Bottle	None	Empirical
Dissolved Fe and Mn by 6010	Yes	1	250 mL	Poly Bottle	HNO3	Empirical
Alkalinity by SM2320B Anions (Chloride, Sulfate, Bromide) by EPA 9056	NA	1	250 mL	Poly Bottle	None	Empirical
Iodide by EPA 300	NA	1	250 mL	Poly Bottle	None	Test America
Reduced Gases by RSKSOP-175/EPA 3810	NA	2	40 mL	VOA Vials	HCl	CB&I
VFA by EPA 300m	NA	2	40 mL	VOA Vials	None	CB&I

Comments/Descriptions.

Logged By/Date: [signature] 1/18/18

Reviewed By/Date: _____

Sample Collection Log

500433 KAFB Rapid Response ESTCP – Groundwater, Phase II, Recirculation

Location Code KAFB-106MW1-S

RFA/COC Number 500433EDBPT-GW022

Sample Number 106MW1S-P2R-01

Collection Date 1/18/18

Sampling Method Low Flow

Collection Time 1405

Sample Type Grab

Start Depth 463

QC Code Normal

End Depth 498

Sampling Equipment Bladder Pump

Sample Matrix GW

QC Partners None

Sample Team CL

Containers:

Analytical Suite	Filtered	Qty	Size	Container Type	Preservative	Lab
EDB by 8011	NA	2	40 mL	VOA Vials	None	Empirical
VOCs by 8260	NA	3	40 mL	VOA Vials	HCl	Empirical
Nitrate by EPA 353.2	NA	1	250 mL	Poly Bottle	H2SO4	Empirical
O-Phosphate by SM4500 PE	Yes	1	250 mL	Poly Bottle	None	Empirical
Dissolved Fe and Mn by 6010	Yes	1	250 mL	Poly Bottle	HNO3	Empirical
Alkalinity by SM2320B Anions (Chloride, Sulfate, Bromide) by EPA 9056	NA	1	250 mL	Poly Bottle	None	Empirical
Iodide by EPA 300	NA	1	250 mL	Poly Bottle	None	Test America
Reduced Gases by RSKSOP-175/EPA 3810	NA	2	40 mL	VOA Vials	HCl	CB&I
VFA by EPA 300m	NA	2	40 mL	VOA Vials	None	CB&I

Comments/Descriptions:
Week 3 Event. DTW = 474.51 ftbtoc. No measurable LNAPL.
Water has strong fuel and fouling (sewage) odor.

Logged By/Date: [signature] 1/18/18

Reviewed By/Date:

Sample Collection Log

500433 KAFB Rapid Response ESTCP – Groundwater, Phase II, Recirculation

Location Code KAFB-106064

RFA/COC Number 500433EDBPT-GW022

Sample Number 106064-P2R-01

Collection Date 1/18/18

Sampling Method Low Flow

Collection Time 1020

Sample Type Grab

Start Depth cl ~~50~~ 488

QC Code Normal

End Depth 508

Sampling Equipment Bladder Pump

Sample Matrix GW

QC Partners None

Sample Team CL

Containers:

Analytical Suite	Filtered	Qty	Size	Container Type	Preservative	Lab
EDB by 8011	NA	2	40 mL	VOA Vials	None	Empirical
VOCs by 8260	NA	3	40 mL	VOA Vials	HCl	Empirical
Nitrate by EPA 353.2	NA	1	250 mL	Poly Bottle	H2SO4	Empirical
O-Phosphate by SM4500 PE	Yes	1	250 mL	Poly Bottle	None	Empirical
Dissolved Fe and Mn by 6010	Yes	1	250 mL	Poly Bottle	HNO3	Empirical
Alkalinity by SM2320B Anions (Chloride, Sulfate, Bromide) by EPA 9056	NA	1	250 mL	Poly Bottle	None	Empirical
Iodide by EPA 300	NA	1	250 mL	Poly Bottle	None	Test America
Reduced Gases by RSKSOP-175/EPA 3810	NA	2	40 mL	VOA Vials	HCl	CB&I
VFA by EPA 300m	NA	2	40 mL	VOA Vials	None	CB&I

Comments/Descriptions:

Week 3 Event. DTW = 478.08 ft btoc

Water smells like fuel and fouling (sewage)

Logged By/Date: [signature]

Reviewed By/Date:

Sample Collection Log

500433 KAFB Rapid Response ESTCP – Groundwater, Phase II, Recirculation

Location Code KAFB-106MW2I

RFA/COC Number 500433EDBPT-GW023

Sample Number 106MW2I-P2R-012418

Collection Date 1/24/18

Sampling Method low flow

Collection Time 0942

Sample Type grab

Start Depth 513

QC Code normal

End Depth 523

Sampling Equipment bladder pump

Sample Matrix GW

QC Partners none

Sample Team TK

Containers:

Analytical Suite	Filtered	Qty	Size	Container Type	Preservative	Lab
EDB by 8011	NA	2	40 mL	VOA Vials	None	Empirical
VOCs by 8260	NA	3	40 mL	VOA Vials	HCl	Empirical
Nitrate by EPA 353.2	NA	1	250 mL	Poly Bottle	H2SO4	Empirical
O-Phosphate by SM4500 PE	Yes	1	250 mL	Poly Bottle	None	Empirical
Dissolved Fe and Mn by 6010	Yes	1	250 mL	Poly Bottle	HNO3	Empirical
Alkalinity by SM2320B Anions (Chloride, Sulfate, Bromide) by EPA 9056	NA	1	250 mL	Poly Bottle	None	Empirical
Iodide by EPA 300	NA	1	250 mL	Poly Bottle	None	Test America
Reduced Gases by RSKSOP-175/EPA 3810	NA	2	40 mL	VOA Vials	HCl	CB&I
VFA by EPA 300m	NA	2	40 mL	VOA Vials	None	CB&I
QuantArray-Chlor	NA	1	1 L	Poly Bottle	None	Microbial Insights
~~TSK EDB CSIA~~	~~NA~~	~~2~~	~~1 L~~	~~Amber Bottle~~	~~HCl~~	~~University of Oklahom~~

Comments/Descriptions.

Note, no CSIA sample on intermediate wells.

Logged By/Date: [signature] 1/24/18

Reviewed By/Date:

Sample Collection Log

500433 KAFB Rapid Response ESTCP – Groundwater, Phase II, Recirculation

Location Code: KAFB-106IN1

RFA/COC Number: 500433EDBPT-GW023

Sample Number: 106IN1-P2R-012418-04

Collection Date: 1/24/18

Sampling Method: Conveyance piping

Collection Time: 1127

Sample Type: grab

Start Depth: NA

QC Code: normal

End Depth: NA

Sampling Equipment: port, piping

Sample Matrix: GW

QC Partners: none

Sample Team: TK, CL

Containers:

Analytical Suite	Filtered	Qty	Size	Container Type	Preservative	Lab
Iodide by EPA 300	NA	1	250 mL	Poly Bottle	None	Test America
Phosphate	Yes	1	250mL	poly Bottle	None	Empirical
VFA	No	2	40 mL	VOA	None	Aptim

Comments/Descriptions:

Injection well sample port in conex, pump is off, this is an influent sample with comingled EX well water

Logged By/Date: [signature] 1/24/18

Reviewed By/Date: _____

Sample Collection Log

500433 KAFB Rapid Response ESTCP – Groundwater, Phase II, Recirculation

Location Code KAFB-106MW2S

RFA/COC Number 500433EDBPT-GW023

Sample Number 106MW2S-P2R-012418

Collection Date 1/24/18

Sampling Method low flow

Collection Time 1347

Sample Type grab

Start Depth 463

QC Code normal

End Depth 498

Sampling Equipment bladder pump

Sample Matrix GW

QC Partners none

Sample Team TK

Containers:

Analytical Suite	Filtered	Qty	Size	Container Type	Preservative	Lab
EDB by 8011	NA	2	40 mL	VOA Vials	None	Empirical
VOCs by 8260	NA	3	40 mL	VOA Vials	HCl	Empirical
Nitrate by EPA 353.2	NA	1	250 mL	Poly Bottle	H2SO4	Empirical
O-Phosphate by SM4500 PE	Yes	1	250 mL	Poly Bottle	None	Empirical
Dissolved Fe and Mn by 6010	Yes	1	250 mL	Poly Bottle	HNO3	Empirical
Alkalinity by SM2320B Anions (Chloride, Sulfate, Bromide) by EPA 9056	NA	1	250 mL	Poly Bottle	None	Empirical
Iodide by EPA 300	NA	1	250 mL	Poly Bottle	None	Test America
Reduced Gases by RSKSOP-175/EPA 3810	NA	2	40 mL	VOA Vials	HCl	CB&I
VFA by EPA 300m	NA	2	40 mL	VOA Vials	None	CB&I
QuantArray-Chlor	NA	1	1 L	Poly Bottle	None	Microbial Insights
EDB CSIA	NA	2	1 L	Amber Bottle	HCl	University of Oklahom

Comments/Descriptions.

Logged By/Date: [illegible] 1/24/18

Reviewed By/Date:

Sample Collection Log

500433 KAFB Rapid Response ESTCP – Groundwater, Phase II, Recirculation

Location Code KAFB-106MW1-S

RFA/COC Number 500433EDBPT-GW023

Sample Number 106MW1S-P2R-012418

Collection Date 1/24/18

Sampling Method Low Flow

Collection Time 1320

Sample Type Grab

Start Depth 463

QC Code Normal

End Depth 498

Sampling Equipment Bladder Pump

Sample Matrix GW

QC Partners None

Sample Team A, TK

Containers:

Analytical Suite	Filtered	Qty	Size	Container Type	Preservative	Lab
EDB by 8011	NA	2	40 mL	VOA Vials	None	Empirical
VOCs by 8260	NA	3	40 mL	VOA Vials	HCl	Empirical
Nitrate by EPA 353.2	NA	1	250 mL	Poly Bottle	H2SO4	Empirical
O-Phosphate by SM4500 PE	Yes	1	250 mL	Poly Bottle	None	Empirical
Dissolved Fe and Mn by 6010	Yes	1	250 mL	Poly Bottle	HNO3	Empirical
Alkalinity by SM2320B Anions (Chloride, Sulfate, Bromide) by EPA 9056	NA	1	250 mL	Poly Bottle	None	Empirical
Iodide by EPA 300	NA	1	250 mL	Poly Bottle	None	Test America
Reduced Gases by RSKSOP-175/EPA 3810	NA	2	40 mL	VOA Vials	HCl	CB&I
VFA by EPA 300m	NA	2	40 mL	VOA Vials	None	CB&I
QuantArray-Chlor	NA	1	1 L	Poly Bottle	None	Microbial Insights
EDB CSIA	NA	2	1 L	Amber Bottle	HCl	University of Oklahom

Comments/Descriptions:
Week 4 event. DTW = 474.75 ft btoc. No measurable LNAPL.
Water smells foul (sewage). Black string-like objects floating in discharge water.

Logged By/Date: [signature] 1/24/18

Reviewed By/Date: _____

Sample Collection Log

500433 KAFB Rapid Response ESTCP – Groundwater, Phase II, Recirculation

Location Code KAFB-106MW1-I

RFA/COC Number 500433EDBPT-GW023

Sample Number 106MW1I-P2R-012418

Collection Date 1/24/18

Sampling Method Low Flow

Collection Time 1055

Sample Type Grab

Start Depth 513

QC Code Normal

End Depth 523

Sampling Equipment Bladder Pump

Sample Matrix GW

QC Partners 106MW1I-P2R-012418-FD

Sample Team CL, TK

Containers:

Analytical Suite	Filtered	Qty	Size	Container Type	Preservative	Lab
EDB by 8011	NA	2	40 mL	VOA Vials	None	Empirical
VOCs by 8260	NA	3	40 mL	VOA Vials	HCl	Empirical
Nitrate by EPA 353.2	NA	1	250 mL	Poly Bottle	H2SO4	Empirical
O-Phosphate by SM4500 PE	Yes	1	250 mL	Poly Bottle	None	Empirical
Dissolved Fe and Mn by 6010	Yes	1	250 mL	Poly Bottle	HNO3	Empirical
Alkalinity by SM2320B Anions (Chloride, Sulfate, Bromide) by EPA 9056	NA	1	250 mL	Poly Bottle	None	Empirical
Iodide by EPA 300	NA	1	250 mL	Poly Bottle	None	Test America
Reduced Gases by RSKSOP-175/EPA 3810	NA	2	40 mL	VOA Vials	HCl	CB&I
VFA by EPA 300m	NA	2	40 mL	VOA Vials	None	CB&I
QuantArray-Chlor	NA	1	1 L	Poly Bottle	None	Microbial Insights
CL ~~EDB CSIA~~	~~NA~~	~~2~~	~~1 L~~	~~Amber Bottle~~	~~HCl~~	~~University of Oklahom~~

Comments/Descriptions:

Week 4 event. Cannot measure DTW in 3" wells.

Did not collect FD for QuantArray analysis. No CSIA @ Intermediate Wells.

Logged By/Date: [signature] 1/24/18

Reviewed By/Date: _____

Sample Collection Log

500433 KAFB Rapid Response ESTCP – Groundwater, Phase II, Recirculation

Location Code KAFB-106EX1

RFA/COC Number 500433EDBPT-GW024

Sample Number 106EX1-P2R-012518

Collection Date 1/25/18

Sampling Method Conveyance piping

Collection Time 1307

Sample Type grab

Start Depth 487

QC Code normal

End Depth 502

Sampling Equipment piping, sample port

Sample Matrix GW

QC Partners none

Sample Team TK, CL

Containers:

Analytical Suite	Filtered	Qty	Size	Container Type	Preservative	Lab
EDB by 8011	NA	2	40 mL	VOA Vials	None	Empirical
VOCs by 8260	NA	3	40 mL	VOA Vials	HCl	Empirical
Nitrate by EPA 353.2	NA	1	250 mL	Poly Bottle	H2SO4	Empirical
O-Phosphate by SM4500 PE	Yes	1	250 mL	Poly Bottle	None	Empirical
Dissolved Fe and Mn by 6010	Yes	1	250 mL	Poly Bottle	HNO3	Empirical
Alkalinity by SM2320B Anions (Chloride, Sulfate, Bromide) by EPA 9056	NA	1	250 mL	Poly Bottle	None	Empirical
Iodide by EPA 300	NA	1	250 mL	Poly Bottle	None	Test America
Reduced Gases by RSKSOP-175/EPA 3810	NA	2	40 mL	VOA Vials	HCl	CB&I
VFA by EPA 300m	NA	2	40 mL	VOA Vials	None	CB&I
QuantArray-Chlor	NA	1	1 L	Poly Bottle	None	Microbial Insights
EDB CSIA	NA	2	1 L	Amber Bottle	HCl	University of Oklahom

Comments/Descriptions.

Logged By/Date: [signature] 1/25/18

Reviewed By/Date: _____

Sample Collection Log

500433 KAFB Rapid Response ESTCP – Groundwater, Phase II, Recirculation

Location Code KAFB-106063

RFA/COC Number 500433EDBPT-GW029

Sample Number 106063-P2R-012518

Collection Date 1/25/18

Sampling Method low flow

Collection Time 1142

Sample Type grab

Start Depth 508

QC Code normal

End Depth 523

Sampling Equipment bladder pump

Sample Matrix GW

QC Partners none

Sample Team TK

Containers:

Analytical Suite	Filtered	Qty	Size	Container Type	Preservative	Lab
EDB by 8011	NA	2	40 mL	VOA Vials	None	Empirical
VOCs by 8260	NA	3	40 mL	VOA Vials	HCl	Empirical
Nitrate by EPA 353.2	NA	1	250 mL	Poly Bottle	H2SO4	Empirical
O-Phosphate by SM4500 PE	Yes	1	250 mL	Poly Bottle	None	Empirical
Dissolved Fe and Mn by 6010	Yes	1	250 mL	Poly Bottle	HNO3	Empirical
Alkalinity by SM2320B Anions (Chloride, Sulfate, Bromide) by EPA 9056	NA	1	250 mL	Poly Bottle	None	Empirical
Iodide by EPA 300	NA	1	250 mL	Poly Bottle	None	Test America
Reduced Gases by RSKSOP-175/EPA 3810	NA	2	40 mL	VOA Vials	HCl	CB&I
VFA by EPA 300m	NA	2	40 mL	VOA Vials	None	CB&I
QuantArray-Chlor	NA	1	1 L	Poly Bottle	None	Microbial Insights
~~EDB CSIA~~ TSK	~~NA~~	~~2~~	~~1 L~~	~~Amber Bottle~~	~~HCl~~	~~University of Oklahom~~

Comments/Descriptions.

Note, no CSIA sample collected on intermediate wells

Logged By/Date: L Kmul 1/25/18

Reviewed By/Date: _____

Sample Collection Log

500433 KAFB Rapid Response ESTCP – Groundwater, Phase II, Recirculation

Location Code KAFB-106EX2

RFA/COC Number 500433EDBPT-GW024

Sample Number 106EX2-P2R-012518

Collection Date 1/25/18

Sampling Method Conveyance piping

Collection Time 1347

Sample Type grab

Start Depth 487

QC Code normal

End Depth 502

Sampling Equipment piping, sample port

Sample Matrix GW

QC Partners none

Sample Team TK, CL

Containers:

Analytical Suite	Filtered	Qty	Size	Container Type	Preservative	Lab
EDB by 8011	NA	2	40 mL	VOA Vials	None	Empirical
VOCs by 8260	NA	3	40 mL	VOA Vials	HCl	Empirical
Nitrate by EPA 353.2	NA	1	250 mL	Poly Bottle	H2SO4	Empirical
O-Phosphate by SM4500 PE	Yes	1	250 mL	Poly Bottle	None	Empirical
Dissolved Fe and Mn by 6010	Yes	1	250 mL	Poly Bottle	HNO3	Empirical
Alkalinity by SM2320B Anions (Chloride, Sulfate, Bromide) by EPA 9056	NA	1	250 mL	Poly Bottle	None	Empirical
Iodide by EPA 300	NA	1	250 mL	Poly Bottle	None	Test America
Reduced Gases by RSKSOP-175/EPA 3810	NA	2	40 mL	VOA Vials	HCl	CB&I
VFA by EPA 300m	NA	2	40 mL	VOA Vials	None	CB&I
QuantArray-Chlor	NA	1	1 L	Poly Bottle	None	Microbial Insights
EDB CSIA	NA	2	1 L	Amber Bottle	HCl	University of Oklahom

Comments/Descriptions.

Logged By/Date: [signature] 1/25/18

Reviewed By/Date:

Sample Collection Log

500433 KAFB Rapid Response ESTCP – Groundwater, Phase II, Recirculation

Location Code KAFB-106064

RFA/COC Number 500433EDBPT-GW024

Sample Number 106064-P2R-012518

Collection Date 1/25/18

Sampling Method Low Flow

Collection Time 0935

Sample Type Grab

Start Depth 488

QC Code Normal

End Depth 508

Sampling Equipment Bladder Pump

Sample Matrix GW

QC Partners None

Sample Team a

Containers:

Analytical Suite	Filtered	Qty	Size	Container Type	Preservative	Lab
EDB by 8011	NA	2	40 mL	VOA Vials	None	Empirical
VOCs by 8260	NA	3	40 mL	VOA Vials	HCl	Empirical
Nitrate by EPA 353.2	NA	1	250 mL	Poly Bottle	H2SO4	Empirical
O-Phosphate by SM4500 PE	Yes	1	250 mL	Poly Bottle	None	Empirical
Dissolved Fe and Mn by 6010	Yes	1	250 mL	Poly Bottle	HNO3	Empirical
Alkalinity by SM2320B Anions (Chloride, Sulfate, Bromide) by EPA 9056	NA	1	250 mL	Poly Bottle	None	Empirical
Iodide by EPA 300	NA	1	250 mL	Poly Bottle	None	Test America
Reduced Gases by RSKSOP-175/EPA 3810	NA	2	40 mL	VOA Vials	HCl	CB&I
VFA by EPA 300m	NA	2	40 mL	VOA Vials	None	CB&I
QuantArray-Chlor	NA	1	1 L	Poly Bottle	None	Microbial Insights
EDB CSIA	NA	2	1 L	Amber Bottle	HCl	University of Oklahom

Comments/Descriptions:

Week 4 event. DTW= 477.90 ft btoc.

Logged By/Date: [illegible] 1/25/18

Reviewed By/Date: _____

Sample Collection Log

500433 KAFB Rapid Response ESTCP – Groundwater, Phase 2, Passive

Location Code KAFB-106063

RFA/COC Number 500433EDBPT-GW025

Sample Number 106063-P2P-030618

Collection Date 3/6/18

Sampling Method low flow

Collection Time 1445

Sample Type grab

Start Depth 508

QC Code normal

End Depth 523

Sampling Equipment bladder pump

Sample Matrix GW

QC Partners none

Sample Team TK

Containers:

Analytical Suite	Filtered	Qty	Size	Container Type	Preservative	Lab
EDB by 8011	NA	2	40 mL	VOA Vials	None	Empirical
VOCs by 8260	NA	3	40 mL	VOA Vials	HCl	Empirical
Nitrate by EPA 353.2	NA	1	250 mL	Poly Bottle	H2SO4	Empirical
O-Phosphate by SM4500 PE	Yes	1	250 mL	Poly Bottle	None	Empirical
Dissolved Fe and Mn by 6010	Yes	1	250 mL	Poly Bottle	HNO3	Empirical
Alkalinity by SM2320B Anions (Chloride, Sulfate, Bromide) by EPA 9056	NA	1	250 mL	Poly Bottle	None	Empirical
Iodide by EPA 300	NA	1	250 mL	Poly Bottle	None	Test America
Reduced Gases by RSKSOP-175/EPA 3810	NA	2	40 mL	VOA Vials	HCl	CB&I
VFA by EPA 300m	NA	2	40 mL	VOA Vials	None	CB&I

Comments/Descriptions. Month 1 Event.

Logged By/Date: 3/6/18

Reviewed By/Date:

Sample Collection Log

500433 KAFB Rapid Response ESTCP – Groundwater, Phase 2, Passive

Location Code KAFB-106MW2I

RFA/COC Number 500433EDBPT-GW025

Sample Number 106MW2I-P2P-030618

Collection Date 3/6/18

Sampling Method low flow

Collection Time 1015

Sample Type grab

Start Depth 513

QC Code FD

End Depth 523

Sampling Equipment bladder pump

Sample Matrix GW

QC Partners 106MW2I-P2P-030618-FD

Sample Team TK

Containers:

Analytical Suite	Filtered	Qty	Size	Container Type	Preservative	Lab
EDB by 8011	NA	2	40 mL	VOA Vials	None	Empirical
VOCs by 8260	NA	3	40 mL	VOA Vials	HCl	Empirical
Nitrate by EPA 353.2	NA	1	250 mL	Poly Bottle	H2SO4	Empirical
O-Phosphate by SM4500 PE	Yes	1	250 mL	Poly Bottle	None	Empirical
Dissolved Fe and Mn by 6010	Yes	1	250 mL	Poly Bottle	HNO3	Empirical
Alkalinity by SM2320B Anions (Chloride, Sulfate, Bromide) by EPA 9056	NA	1	250 mL	Poly Bottle	None	Empirical
Iodide by EPA 300	NA	1	250 mL	Poly Bottle	None	Test America
Reduced Gases by RSKSOP-175/EPA 3810	NA	2	40 mL	VOA Vials	HCl	CB&I
VFA by EPA 300m	NA	2	40 mL	VOA Vials	None	CB&I

Comments/Descriptions. Month 1 Event. during passive of phase 2

FD collected too, 106MW2I-P2P-030618-FD

Logged By/Date: [signature] 3/6/18

Reviewed By/Date: _____

Sample Collection Log

500433 KAFB Rapid Response ESTCP – Groundwater, Phase 2, Passive

Location Code KAFB-106MW1-S

RFA/COC Number 500433EDBPT-GW025

Sample Number 106MW1S-P2P-030618

Collection Date 3/6/18

Sampling Method Low Flow

Collection Time 1305

Sample Type Grab

Start Depth 463

QC Code Normal

End Depth 498

Sampling Equipment Bladder Pump

Sample Matrix GW

QC Partners None

Sample Team CL, TK

Containers:

Analytical Suite	Filtered	Qty	Size	Container Type	Preservative	Lab
EDB by 8011	NA	2	40 mL	VOA Vials	None	Empirical
VOCs by 8260	NA	3	40 mL	VOA Vials	HCl	Empirical
Nitrate by EPA 353.2	NA	1	250 mL	Poly Bottle	H2SO4	Empirical
O-Phosphate by SM4500 PE	Yes	1	250 mL	Poly Bottle	None	Empirical
Dissolved Fe and Mn by 6010	Yes	1	250 mL	Poly Bottle	HNO3	Empirical
Alkalinity by SM2320B Anions (Chloride, Sulfate, Bromide) by EPA 9056	NA	1	250 mL	Poly Bottle	None	Empirical
Iodide by EPA 300	NA	1	250 mL	Poly Bottle	None	Test America
Reduced Gases by RSKSOP-175/EPA 3810	NA	2	40 mL	VOA Vials	HCl	CB&I
VFA by EPA 300m	NA	2	40 mL	VOA Vials	None	CB&I

Comments/Descriptions. Month 1 Event.

DTW= 474.48 ft btoc. No measurable product. Fuel odor.

Logged By/Date: [signature] 3/6/18

Reviewed By/Date: _____

Sample Collection Log

500433 KAFB Rapid Response ESTCP – Groundwater, Phase 2, Passive

Location Code KAFB-106MW1-I

RFA/COC Number 500433EDBPT-GW025

Sample Number 106MW1I-P2R-030618

Collection Date 3/6/18

Sampling Method Low Flow

Collection Time 1035

Sample Type Grab

Start Depth 513

QC Code Normal

End Depth 523

Sampling Equipment Bladder Pump

Sample Matrix GW

QC Partners None

Sample Team CL, TK

Containers:

Analytical Suite	Filtered	Qty	Size	Container Type	Preservative	Lab
EDB by 8011	NA	2	40 mL	VOA Vials	None	Empirical
VOCs by 8260	NA	3	40 mL	VOA Vials	HCl	Empirical
Nitrate by EPA 353.2	NA	1	250 mL	Poly Bottle	H2SO4	Empirical
O-Phosphate by SM4500 PE	Yes	1	250 mL	Poly Bottle	None	Empirical
Dissolved Fe and Mn by 6010	Yes	1	250 mL	Poly Bottle	HNO3	Empirical
Alkalinity by SM2320B Anions (Chloride, Sulfate, Bromide) by EPA 9056	NA	1	250 mL	Poly Bottle	None	Empirical
Iodide by EPA 300	NA	1	250 mL	Poly Bottle	None	Test America
Reduced Gases by RSKSOP-175/EPA 3810	NA	2	40 mL	VOA Vials	HCl	CB&I
VFA by EPA 300m	NA	2	40 mL	VOA Vials	None	CB&I

Comments/Descriptions. Month 1 Event.

Cannot measure PTW in 3" wells due to tubing bundle obstruction.
Slight fuel odor.

Logged By/Date: 3/6/18

Reviewed By/Date:

Sample Collection Log

500433 KAFB Rapid Response ESTCP – Groundwater, Phase 2, Passive

Location Code KAFB-106EX1

RFA/COC Number 500433EDBPT-GW026

Sample Number 106EX1-P2P-030718

Collection Date 3/7/18

Sampling Method Conveyance piping

Collection Time 1443

Sample Type grab

Start Depth 487

QC Code normal

End Depth 502

Sampling Equipment piping/sample port

Sample Matrix GW

QC Partners none

Sample Team TK, CL

Containers:

Analytical Suite	Filtered	Qty	Size	Container Type	Preservative	Lab
EDB by 8011	NA	2	40 mL	VOA Vials	None	Empirical
VOCs by 8260	NA	3	40 mL	VOA Vials	HCl	Empirical
Nitrate by EPA 353.2	NA	1	250 mL	Poly Bottle	H2SO4	Empirical
O-Phosphate by SM4500 PE	Yes	1	250 mL	Poly Bottle	None	Empirical
Dissolved Fe and Mn by 6010	Yes	1	250 mL	Poly Bottle	HNO3	Empirical
Alkalinity by SM2320B Anions (Chloride, Sulfate, Bromide) by EPA 9056	NA	1	250 mL	Poly Bottle	None	Empirical
Iodide by EPA 300	NA	1	250 mL	Poly Bottle	None	Test America
Reduced Gases by RSKSOP-175/EPA 3810	NA	2	40 mL	VOA Vials	HCl	CB&I
VFA by EPA 300m	NA	2	40 mL	VOA Vials	None	CB&I

Comments/Descriptions. Month 1 Event. passive phase 2

Logged By/Date: 3/7/18

Reviewed By/Date:

Sample Collection Log

500433 KAFB Rapid Response ESTCP – Groundwater, Phase 2, Passive

Location Code KAFB-106EX2

RFA/COC Number 500433EDBPT-GW026

Sample Number 106EX2-P2P-030718

Collection Date 3/7/18

Sampling Method conveyance piping

Collection Time 1517

Sample Type grab

Start Depth 487

QC Code normal

End Depth 502

Sampling Equipment piping/sample port

Sample Matrix GW

QC Partners none

Sample Team TK

Containers:

Analytical Suite	Filtered	Qty	Size	Container Type	Preservative	Lab
EDB by 8011	NA	2	40 mL	VOA Vials	None	Empirical
VOCs by 8260	NA	3	40 mL	VOA Vials	HCl	Empirical
Nitrate by EPA 353.2	NA	1	250 mL	Poly Bottle	H2SO4	Empirical
O-Phosphate by SM4500 PE	Yes	1	250 mL	Poly Bottle	None	Empirical
Dissolved Fe and Mn by 6010	Yes	1	250 mL	Poly Bottle	HNO3	Empirical
Alkalinity by SM2320B Anions (Chloride, Sulfate, Bromide) by EPA 9056	NA	1	250 mL	Poly Bottle	None	Empirical
Iodide by EPA 300	NA	1	250 mL	Poly Bottle	None	Test America
Reduced Gases by RSKSOP-175/EPA 3810	NA	2	40 mL	VOA Vials	HCl	CB&I
VFA by EPA 300m	NA	2	40 mL	VOA Vials	None	CB&I

Comments/Descriptions. Month 1 Event. passive for phase 2

Logged By/Date: [illegible] 3/7/18

Reviewed By/Date: _____

Sample Collection Log

500433 KAFB Rapid Response ESTCP – Groundwater, Phase 2, Passive

Location Code KAFB-106MW2S

RFA/COC Number 500433EDBPT-GW026

Sample Number 106MW2S-P2P-030718

Collection Date 3/7/18

Sampling Method low flow

Collection Time 0942

Sample Type grab

Start Depth 463

QC Code normal

End Depth 498

Sampling Equipment bladder pump

Sample Matrix GW

QC Partners none

Sample Team TK

Containers:

Analytical Suite	Filtered	Qty	Size	Container Type	Preservative	Lab
EDB by 8011	NA	2	40 mL	VOA Vials	None	Empirical
VOCs by 8260	NA	3	40 mL	VOA Vials	HCl	Empirical
Nitrate by EPA 353.2	NA	1	250 mL	Poly Bottle	H2SO4	Empirical
O-Phosphate by SM4500 PE	Yes	1	250 mL	Poly Bottle	None	Empirical
Dissolved Fe and Mn by 6010	Yes	1	250 mL	Poly Bottle	HNO3	Empirical
Alkalinity by SM2320B Anions (Chloride, Sulfate, Bromide) by EPA 9056	NA	1	250 mL	Poly Bottle	None	Empirical
Iodide by EPA 300	NA	1	250 mL	Poly Bottle	None	Test America
Reduced Gases by RSKSOP-175/EPA 3810	NA	2	40 mL	VOA Vials	HCl	CB&I
VFA by EPA 300m	NA	2	40 mL	VOA Vials	None	CB&I

Comments/Descriptions. Month 1 Event passive for phase 2

Logged By/Date: [signature] 3/7/18

Reviewed By/Date: _____

Sample Collection Log

500433 KAFB Rapid Response ESTCP – Groundwater, Phase 2, Passive

Location Code KAFB-106064

Sample Number 106064-P2P-030718

Sampling Method Low Flow

Sample Type Grab

QC Code Normal

Sampling Equipment Bladder Pump

QC Partners None

RFA/COC Number 500433EDBPT-GW026

Collection Date 3/7/18

Collection Time 0940

Start Depth 488

End Depth 508

Sample Matrix GW

Sample Team CL, TK

Containers:

Analytical Suite	Filtered	Qty	Size	Container Type	Preservative	Lab
EDB by 8011	NA	2	40 mL	VOA Vials	None	Empirical
VOCs by 8260	NA	3	40 mL	VOA Vials	HCl	Empirical
Nitrate by EPA 353.2	NA	1	250 mL	Poly Bottle	H2SO4	Empirical
O-Phosphate by SM4500 PE	Yes	1	250 mL	Poly Bottle	None	Empirical
Dissolved Fe and Mn by 6010	Yes	1	250 mL	Poly Bottle	HNO3	Empirical
Alkalinity by SM2320B	NA	1	250 mL	Poly Bottle	None	Empirical
Anions (Chloride, Sulfate, Bromide) by EPA 9056						
Iodide by EPA 300	NA	1	250 mL	Poly Bottle	None	Test America
Reduced Gases by RSKSOP-175/EPA 3810	NA	2	40 mL	VOA Vials	HCl	CB&I
VFA by EPA 300m	NA	2	40 mL	VOA Vials	None	CB&I

Comments/Descriptions. Month 1 Event.

DTW = 477.82 ft btoc (3ft stick-up).

Logged By/Date: 3/7/18

Reviewed By/Date:

Sample Collection Log

500433 KAFB Rapid Response ESTCP – Groundwater, Phase 2, Passive

Location Code KAFB-106IN1

RFA/COC Number 500433EDBPT-GW026

Sample Number 106IN1-P2P-030718

Collection Date 3/7/18

Sampling Method Low Flow

Collection Time 1350

Sample Type Grab

Start Depth 477

QC Code Normal

End Depth 497

Sampling Equipment Bladder Pump

Sample Matrix GW

QC Partners None

Sample Team CL, TK

Containers:

Analytical Suite	Filtered	Qty	Size	Container Type	Preservative	Lab
EDB by 8011	NA	2	40 mL	VOA Vials	None	Empirical
VOCs by 8260	NA	3	40 mL	VOA Vials	HCl	Empirical
Nitrate by EPA 353.2	NA	1	250 mL	Poly Bottle	H2SO4	Empirical
O-Phosphate by SM4500 PE	Yes	1	250 mL	Poly Bottle	None	Empirical
Dissolved Fe and Mn by 6010	Yes	1	250 mL	Poly Bottle	HNO3	Empirical
Alkalinity by SM2320B Anions (Chloride, Sulfate, Bromide) by EPA 9056	NA	1	250 mL	Poly Bottle	None	Empirical
Iodide by EPA 300	NA	1	250 mL	Poly Bottle	None	Test America
Reduced Gases by RSKSOP-175/EPA 3810	NA	2	40 mL	VOA Vials	HCl	CB&I
VFA by EPA 300m	NA	2	40 mL	VOA Vials	None	CB&I

Comments/Descriptions. Month 1 Event.

Transducer reading DTW=474.80ft bgs(pre-purge.)
Water smells foul. First water is grey w/ sewage odor.

Logged By/Date: 3/7/18

Reviewed By/Date:

Sample Collection Log

500433 KAFB Rapid Response ESTCP – Groundwater, Phase 2, Passive

Location Code KAFB-106064

RFA/COC Number 500433EDBPT-GW027

Sample Number 106064-P2P-041018

Collection Date 4/10/18

Sampling Method Low Flow

Collection Time 0915

Sample Type Grab

Start Depth 488

QC Code Normal

End Depth 503

Sampling Equipment Bladder Pump

Sample Matrix GW

QC Partners None

Sample Team CL

Containers:

Analytical Suite	Filtered	Qty	Size	Container Type	Preservative	Lab
EDB by 8011	NA	2	40 mL	VOA Vials	None	Empirical
VOCs by 8260	NA	3	40 mL	VOA Vials	HCl	Empirical
Nitrate by EPA 353.2	NA	1	250 mL	Poly Bottle	H2SO4	Empirical
O-Phosphate by SM4500 PE	Yes	1	250 mL	Poly Bottle	None	Empirical
Dissolved Fe and Mn by 6010	Yes	1	250 mL	Poly Bottle	HNO3	Empirical
Alkalinity by SM2320B Anions (Chloride, Sulfate, Bromide) by EPA 9056	NA	1	250 mL	Poly Bottle	None	Empirical
Iodide by EPA 300	NA	1	250 mL	Poly Bottle	None	Test America
Reduced Gases by RSKSOP-175/EPA 3810	NA	2	40 mL	VOA Vials	HCl	CB&I
VFA by EPA 300m	NA	2	40 mL	VOA Vials	None	CB&I

Comments/Descriptions. Month 2 Event.

DTW=477.70 ft btoc. Slight fuel odor. Water is clear.

Logged By/Date: [illegible] 4/10/18

Reviewed By/Date:

Sample Collection Log

500433 KAFB Rapid Response ESTCP – Groundwater, Phase 2, Passive

Location Code KAFB-106MW1-I

RFA/COC Number 500433EDBPT-GW027

Sample Number 106MW1I-P2P-

Collection Date 4/10/18

Sampling Method Low Flow

Collection Time 1408

Sample Type Grab

Start Depth 513

QC Code Normal

End Depth 523

Sampling Equipment Bladder Pump

Sample Matrix ~~GW~~ GW

QC Partners None

Sample Team CL

Containers:

Analytical Suite	Filtered	Qty	Size	Container Type	Preservative	Lab
EDB by 8011	NA	2	40 mL	VOA Vials	None	Empirical
VOCs by 8260	NA	3	40 mL	VOA Vials	HCl	Empirical
Nitrate by EPA 353.2	NA	1	250 mL	Poly Bottle	H2SO4	Empirical
O-Phosphate by SM4500 PE	Yes	1	250 mL	Poly Bottle	None	Empirical
Dissolved Fe and Mn by 6010	Yes	1	250 mL	Poly Bottle	HNO3	Empirical
Alkalinity by SM2320B Anions (Chloride, Sulfate, Bromide) by EPA 9056	NA	1	250 mL	Poly Bottle	None	Empirical
Iodide by EPA 300	NA	1	250 mL	Poly Bottle	None	Test America
Reduced Gases by RSKSOP-175/EPA 3810	NA	2	40 mL	VOA Vials	HCl	CB&I
VFA by EPA 300m	NA	2	40 mL	VOA Vials	None	CB&I

Comments/Descriptions. Month 2 Event.

Cannot measure DTW in 3" wells. Water is clear. Very Slight fuel odor.

Logged By/Date: Jaller 4/10/18

Reviewed By/Date:

Sample Collection Log

500433 KAFB Rapid Response ESTCP – Groundwater, Phase 2, Passive

Location Code KAFB-106MW25

RFA/COC Number 500433EDBPT-GW027

Sample Number 106MW25-P2P-041018

Collection Date 4/10/18

Sampling Method low flow

Collection Time 1307

Sample Type grab

Start Depth 463

QC Code FD

End Depth 498

Sampling Equipment bladder pump

Sample Matrix GW

QC Partners 106MW25-P2P-041018-FD

Sample Team TK, CL

Containers:

Analytical Suite	Filtered	Qty	Size	Container Type	Preservative	Lab
EDB by 8011	NA	2	40 mL	VOA Vials	None	Empirical
VOCs by 8260	NA	3	40 mL	VOA Vials	HCl	Empirical
Nitrate by EPA 353.2	NA	1	250 mL	Poly Bottle	H2SO4	Empirical
O-Phosphate by SM4500 PE	Yes	1	250 mL	Poly Bottle	None	Empirical
Dissolved Fe and Mn by 6010	Yes	1	250 mL	Poly Bottle	HNO3	Empirical
Alkalinity by SM2320B Anions (Chloride, Sulfate, Bromide) by EPA 9056	NA	1	250 mL	Poly Bottle	None	Empirical
Iodide by EPA 300	NA	1	250 mL	Poly Bottle	None	Test America
Reduced Gases by RSKSOP-175/EPA 3810	NA	2	40 mL	VOA Vials	HCl	CB&I
VFA by EPA 300m	NA	2	40 mL	VOA Vials	None	CB&I

Comments/Descriptions. Month 2 Event.

FD collected here for all parameters

Logged By/Date: [signature] 4/10/18

Reviewed By/Date:

Sample Collection Log

500433 KAFB Rapid Response ESTCP – Groundwater, Phase 2, Passive

Location Code KAFB-106063

RFA/COC Number 500433EDBPT-GW027

Sample Number 106063-P2P-041018

Collection Date 4/10/18

Sampling Method low flow

Collection Time 1042

Sample Type grab

Start Depth 508

QC Code normal

End Depth 523

Sampling Equipment bladder pump

Sample Matrix GW

QC Partners none

Sample Team TK, CL

Containers:

Analytical Suite	Filtered	Qty	Size	Container Type	Preservative	Lab
EDB by 8011	NA	2	40 mL	VOA Vials	None	Empirical
VOCs by 8260	NA	3	40 mL	VOA Vials	HCl	Empirical
Nitrate by EPA 353.2	NA	1	250 mL	Poly Bottle	H2SO4	Empirical
O-Phosphate by SM4500 PE	Yes	1	250 mL	Poly Bottle	None	Empirical
Dissolved Fe and Mn by 6010	Yes	1	250 mL	Poly Bottle	HNO3	Empirical
Alkalinity by SM2320B Anions (Chloride, Sulfate, Bromide) by EPA 9056	NA	1	250 mL	Poly Bottle	None	Empirical
Iodide by EPA 300	NA	1	250 mL	Poly Bottle	None	Test America
Reduced Gases by RSKSOP-175/EPA 3810	NA	2	40 mL	VOA Vials	HCl	CB&I
VFA by EPA 300m	NA	2	40 mL	VOA Vials	None	CB&I

Comments/Descriptions. Month 2 Event.

Phase 2 passive, 2nd event

Logged By/Date: [signature] 4/10/18

Reviewed By/Date:

Sample Collection Log

500433 KAFB Rapid Response ESTCP – Groundwater, Phase 2, Passive

Location Code KAFB-106MW1-S

RFA/COC Number 500433EDBPT-GW028

Sample Number 106MW1S-P2P-041118

Collection Date 4/11/18

Sampling Method Low Flow

Collection Time 0925

Sample Type Grab

Start Depth 463

QC Code Normal

End Depth 498

Sampling Equipment Bladder Pump

Sample Matrix GW

QC Partners None

Sample Team a

Containers:

Analytical Suite	Filtered	Qty	Size	Container Type	Preservative	Lab
EDB by 8011	NA	2	40 mL	VOA Vials	None	Empirical
VOCs by 8260	NA	3	40 mL	VOA Vials	HCl	Empirical
Nitrate by EPA 353.2	NA	1	250 mL	Poly Bottle	H2SO4	Empirical
O-Phosphate by SM4500 PE	Yes	1	250 mL	Poly Bottle	None	Empirical
Dissolved Fe and Mn by 6010	Yes	1	250 mL	Poly Bottle	HNO3	Empirical
Alkalinity by SM2320B Anions (Chloride, Sulfate, Bromide) by EPA 9056	NA	1	250 mL	Poly Bottle	None	Empirical
Iodide by EPA 300	NA	1	250 mL	Poly Bottle	None	Test America
Reduced Gases by RSKSOP-175/EPA 3810	NA	2	40 mL	VOA Vials	HCl	CB&I
VFA by EPA 300m	NA	2	40 mL	VOA Vials	None	CB&I

Comments/Descriptions. Month 2 Event.

DTW = 474.00 ft btoc. Water has fuel odor. Water is cloudy at start of purge – cleared @ 0840.

Logged By/Date: [signature] 4/11/18

Reviewed By/Date: _____

Sample Collection Log

500433 KAFB Rapid Response ESTCP – Groundwater, Phase 2, Passive

Location Code KAFB-106EX1

RFA/COC Number S00433EDBPT-GW028

Sample Number 106EX1-PZP-041118

Collection Date 4/11/18

Sampling Method Conveyance piping

Collection Time 1453

Sample Type grab

Start Depth 487

QC Code normal

End Depth 502

Sampling Equipment piping/sample port

Sample Matrix GW

QC Partners none

Sample Team TK, CL

Containers:

Analytical Suite	Filtered	Qty	Size	Container Type	Preservative	Lab
EDB by 8011	NA	2	40 mL	VOA Vials	None	Empirical
VOCs by 8260	NA	3	40 mL	VOA Vials	HCl	Empirical
Nitrate by EPA 353.2	NA	1	250 mL	Poly Bottle	H2SO4	Empirical
O-Phosphate by SM4500 PE	Yes	1	250 mL	Poly Bottle	None	Empirical
Dissolved Fe and Mn by 6010	Yes	1	250 mL	Poly Bottle	HNO3	Empirical
Alkalinity by SM2320B Anions (Chloride, Sulfate, Bromide) by EPA 9056	NA	1	250 mL	Poly Bottle	None	Empirical
Iodide by EPA 300	NA	1	250 mL	Poly Bottle	None	Test America
Reduced Gases by RSKSOP-175/EPA 3810	NA	2	40 mL	VOA Vials	HCl	CB&I
VFA by EPA 300m	NA	2	40 mL	VOA Vials	None	CB&I

Comments/Descriptions. Month 2 Event.

phase 2, passive Event #2

Logged By/Date: [signature] 4/11/18

Reviewed By/Date:

Sample Collection Log

500433 KAFB Rapid Response ESTCP – Groundwater, Phase 2, Passive

Location Code KAFB-106MW2I

RFA/COC Number 500433EDBPT-GW028

Sample Number 106MW2I-P2P-041118

Collection Date 4/11/18

Sampling Method low flow

Collection Time 1022

Sample Type grab

Start Depth 513

QC Code normal

End Depth 523

Sampling Equipment bladder pump

Sample Matrix GW

QC Partners none

Sample Team TK

Containers:

Analytical Suite	Filtered	Qty	Size	Container Type	Preservative	Lab
EDB by 8011	NA	2	40 mL	VOA Vials	None	Empirical
VOCs by 8260	NA	3	40 mL	VOA Vials	HCl	Empirical
Nitrate by EPA 353.2	NA	1	250 mL	Poly Bottle	H2SO4	Empirical
O-Phosphate by SM4500 PE	Yes	1	250 mL	Poly Bottle	None	Empirical
Dissolved Fe and Mn by 6010	Yes	1	250 mL	Poly Bottle	HNO3	Empirical
Alkalinity by SM2320B Anions (Chloride, Sulfate, Bromide) by EPA 9056	NA	1	250 mL	Poly Bottle	None	Empirical
Iodide by EPA 300	NA	1	250 mL	Poly Bottle	None	Test America
Reduced Gases by RSKSOP-175/EPA 3810	NA	2	40 mL	VOA Vials	HCl	CB&I
VFA by EPA 300m	NA	2	40 mL	VOA Vials	None	CB&I

Comments/Descriptions. Month 2 Event.

phase 2 passive event #2

Logged By/Date: [signature] 4/11/18 ***Reviewed By/Date:***

Sample Collection Log

500433 KAFB Rapid Response ESTCP – Groundwater, Phase 2, Passive

Location Code KAFB-106IN1

RFA/COC Number 500433EDBPT-GW028

Sample Number 106IN1-P2P-041118

Collection Date 4/11/18

Sampling Method purge/low flow

Collection Time 1356

Sample Type grab

Start Depth 477

QC Code normal

End Depth 497

Sampling Equipment Grundfos Pump/tubing at surface

Sample Matrix GW

QC Partners none

Sample Team TK, CC

Containers:

Analytical Suite	Filtered	Qty	Size	Container Type	Preservative	Lab
EDB by 8011	NA	2	40 mL	VOA Vials	None	Empirical
VOCs by 8260	NA	3	40 mL	VOA Vials	HCl	Empirical
Nitrate by EPA 353.2	NA	1	250 mL	Poly Bottle	H2SO4	Empirical
O-Phosphate by SM4500 PE	Yes	1	250 mL	Poly Bottle	None	Empirical
Dissolved Fe and Mn by 6010	Yes	1	250 mL	Poly Bottle	HNO3	Empirical
Alkalinity by SM2320B Anions (Chloride, Sulfate, Bromide) by EPA 9056	NA	1	250 mL	Poly Bottle	None	Empirical
Iodide by EPA 300	NA	1	250 mL	Poly Bottle	None	Test America
Reduced Gases by RSKSOP-175/EPA 3810	NA	2	40 mL	VOA Vials	HCl	CB&I
VFA by EPA 300m	NA	2	40 mL	VOA Vials	None	CB&I

Comments/Descriptions. Month 2 Event.

phase 2 passive Event #2

Logged By/Date: [signature] 4/11/18

Reviewed By/Date: _____

Sample Collection Log

500433 KAFB Rapid Response ESTCP – Groundwater, Phase 2, Passive

Location Code KAFB-106EX2

RFA/COC Number 500433EDBPT-GW028

Sample Number 106EX2-P2P-041118

Collection Date 4/11/18

Sampling Method Conveyance piping

Collection Time 1535

Sample Type grab

Start Depth 487

QC Code normal

End Depth 502

Sampling Equipment piping/sample port

Sample Matrix GW

QC Partners none

Sample Team TK, CL

Containers:

Analytical Suite	Filtered	Qty	Size	Container Type	Preservative	Lab
EDB by 8011	NA	2	40 mL	VOA Vials	None	Empirical
VOCs by 8260	NA	3	40 mL	VOA Vials	HCl	Empirical
Nitrate by EPA 353.2	NA	1	250 mL	Poly Bottle	H2SO4	Empirical
O-Phosphate by SM4500 PE	Yes	1	250 mL	Poly Bottle	None	Empirical
Dissolved Fe and Mn by 6010	Yes	1	250 mL	Poly Bottle	HNO3	Empirical
Alkalinity by SM2320B Anions (Chloride, Sulfate, Bromide) by EPA 9056	NA	1	250 mL	Poly Bottle	None	Empirical
Iodide by EPA 300	NA	1	250 mL	Poly Bottle	None	Test America
Reduced Gases by RSKSOP-175/EPA 3810	NA	2	40 mL	VOA Vials	HCl	CB&I
VFA by EPA 300m	NA	2	40 mL	VOA Vials	None	CB&I

Comments/Descriptions. Month 2 Event.

phase 2, passive Event #2

Logged By/Date: [signature] 4/11/18

Reviewed By/Date:

Sample Collection Log

500433 KAFB Rapid Response ESTCP – Groundwater, Phase II, Passive

Location Code KAFB-106MW1-S

RFA/COC Number 500433EDBPT-GW029

Sample Number 106MW1S-P2P-050818

Collection Date 5/8/18

Sampling Method Low Flow

Collection Time 1432

Sample Type Grab

Start Depth 463

QC Code Normal

End Depth 498

Sampling Equipment Bladder Pump

Sample Matrix GW

QC Partners None

Sample Team CL

Containers:

Analytical Suite	Filtered	Qty	Size	Container Type	Preservative	Lab
EDB by 8011	NA	2	40 mL	VOA Vials	None	Empirical
VOCs by 8260	NA	3	40 mL	VOA Vials	HCl	Empirical
Dissolved O-Phosphate by SM4500 PE	Yes	1	250 mL	Poly Bottle	None	Empirical
Dissolved Fe and Mn by 6010	Yes	1	250 mL	Poly Bottle	HNO3	Empirical
Alkalinity by SM2320B Anions (Chloride, Sulfate, Bromide, Nitrate-Nitrite) by EPA 9056	NA	1	250 mL	Poly Bottle	None	Empirical
Iodide by EPA 300	NA	1	250 mL	Poly Bottle	None	Test America
Reduced Gases by RSKSOP-175/EPA 3810	NA	2	40 mL	VOA Vials	HCl	CB&I
VFA by EPA 300m	NA	2	40 mL	VOA Vials	None	CB&I
QuantArray-Chlor	NA	1	1 L	Poly Bottle	None	Microbial Insights
EDB CSIA	NA	2	1 L	Amber Bottle	HCl	University of Oklahom

Comments/Descriptions. Month 3 Event.

DTW=473.96ft btoc. No measurable product. Water has fuel odor.

Logged By/Date: 5/8/18

Reviewed By/Date:

Sample Collection Log

500433 KAFB Rapid Response ESTCP – Groundwater, Phase II, Passive

Location Code KAFB-106MW1-I

RFA/COC Number 500433EDBPT-GW029

Sample Number 106MW1I-P2P-050818

Collection Date 5/8/18

Sampling Method Low Flow

Collection Time 1020

Sample Type Grab

Start Depth 513

QC Code Normal

End Depth 523

Sampling Equipment Bladder Pump

Sample Matrix GW

QC Partners None

Sample Team CL

Containers:

Analytical Suite	Filtered	Qty	Size	Container Type	Preservative	Lab
EDB by 8011	NA	2	40 mL	VOA Vials	None	Empirical
VOCs by 8260	NA	3	40 mL	VOA Vials	HCl	Empirical
Dissolved O-Phosphate by SM4500 PE	Yes	1	250 mL	Poly Bottle	None	Empirical
Dissolved Fe and Mn by 6010	Yes	1	250 mL	Poly Bottle	HNO3	Empirical
Alkalinity by SM2320B Anions (Chloride, Sulfate, Bromide, Nitrate-Nitrite) by EPA 9056	NA	1	250 mL	Poly Bottle	None	Empirical
Iodide by EPA 300	NA	1	250 mL	Poly Bottle	None	Test America
Reduced Gases by RSKSOP-175/EPA 3810	NA	2	40 mL	VOA Vials	HCl	CB&I
VFA by EPA 300m	NA	2	40 mL	VOA Vials	None	CB&I
QuantArray-Chlor	NA	1	1 L	Poly Bottle	None	Microbial Insights
EDB CSIA	NA	2	1 L	Amber Bottle	HCl	University of Oklahom

Comments/Descriptions. Month 3 Event.

Cannot measure DTW @ 3" wells. DTW @ 106MW1-S = 473.96 ft btoc.
Water has fuel odor.

Logged By/Date: 5/8/18

Reviewed By/Date:

Sample Collection Log

500433 KAFB Rapid Response ESTCP – Groundwater, Phase II, Passive

Location Code KAFB-106MW2I

RFA/COC Number 500433EDBPT-GW029

Sample Number 106MW2I-P2P-050818

Collection Date 5/8/18

Sampling Method low flow

Collection Time 1402

Sample Type grab

Start Depth 513

QC Code normal

End Depth 523

Sampling Equipment bladder pump

Sample Matrix GW

QC Partners none

Sample Team TK

Containers:

Analytical Suite	Filtered	Qty	Size	Container Type	Preservative	Lab
EDB by 8011	NA	2	40 mL	VOA Vials	None	Empirical
VOCs by 8260	NA	3	40 mL	VOA Vials	HCl	Empirical
Dissolved O-Phosphate by SM4500 PE	Yes	1	250 mL	Poly Bottle	None	Empirical
Dissolved Fe and Mn by 6010	Yes	1	250 mL	Poly Bottle	HNO3	Empirical
Alkalinity by SM2320B Anions (Chloride, Sulfate, Bromide, Nitrate-Nitrite) by EPA 9056	NA	1	250 mL	Poly Bottle	None	Empirical
Iodide by EPA 300	NA	1	250 mL	Poly Bottle	None	Test America
Reduced Gases by RSKSOP-175/EPA 3810	NA	2	40 mL	VOA Vials	HCl	CB&I
VFA by EPA 300m	NA	2	40 mL	VOA Vials	None	CB&I
QuantArray-Chlor	NA	1	1 L	Poly Bottle	None	Microbial Insights
EDB CSIA	NA	2	1 L	Amber Bottle	HCl	University of Oklahom

Comments/Descriptions. Month 3 Event.

Logged By/Date: [signature] 5/8/18

Reviewed By/Date: _____

Sample Collection Log

500433 KAFB Rapid Response ESTCP – Groundwater, Phase II, Passive

Location Code KAFB-106063

RFA/COC Number 500433EDBPT-GW029

Sample Number 106063-P2P-050818

Collection Date 5/8/18

Sampling Method low flow

Collection Time 1102

Sample Type grab

Start Depth 508

QC Code normal

End Depth 523

Sampling Equipment bladder pump

Sample Matrix GW

QC Partners none

Sample Team TK

Containers:

Analytical Suite	Filtered	Qty	Size	Container Type	Preservative	Lab
EDB by 8011	NA	2	40 mL	VOA Vials	None	Empirical
VOCs by 8260	NA	3	40 mL	VOA Vials	HCl	Empirical
Dissolved O-Phosphate by SM4500 PE	Yes	1	250 mL	Poly Bottle	None	Empirical
Dissolved Fe and Mn by 6010	Yes	1	250 mL	Poly Bottle	HNO3	Empirical
Alkalinity by SM2320B Anions (Chloride, Sulfate, Bromide, Nitrate-Nitrite) by EPA 9056	NA	1	250 mL	Poly Bottle	None	Empirical
Iodide by EPA 300	NA	1	250 mL	Poly Bottle	None	Test America
Reduced Gases by RSKSOP-175/EPA 3810	NA	2	40 mL	VOA Vials	HCl	CB&I
VFA by EPA 300m	NA	2	40 mL	VOA Vials	None	CB&I
QuantArray-Chlor	NA	1	1 L	Poly Bottle	None	Microbial Insights
EDB CSIA	NA	2	1 L	Amber Bottle	HCl	University of Oklahom

Comments/Descriptions. Month 3 Event.

Water has slightly foul odor.

Logged By/Date: T Knol 5/8/18 ***Reviewed By/Date:***

Sample Collection Log

500433 KAFB Rapid Response ESTCP – Groundwater, Phase II, Passive

Location Code KAFB-106EX1

RFA/COC Number 500433EDBPT-GW030

Sample Number 106EX1-PzP-050918

Collection Date 5/9/18

Sampling Method conveyance pipe

Collection Time 1438

Sample Type grab

Start Depth 487

QC Code Normal

End Depth 502

Sampling Equipment piping, port

Sample Matrix GW

QC Partners none

Sample Team TK, CL

Containers:

Analytical Suite	Filtered	Qty	Size	Container Type	Preservative	Lab
EDB by 8011	NA	2	40 mL	VOA Vials	None	Empirical
VOCs by 8260	NA	3	40 mL	VOA Vials	HCl	Empirical
Dissolved O-Phosphate by SM4500 PE	Yes	1	250 mL	Poly Bottle	None	Empirical
Dissolved Fe and Mn by 6010	Yes	1	250 mL	Poly Bottle	HNO3	Empirical
Alkalinity by SM2320B Anions (Chloride, Sulfate, Bromide, Nitrate-Nitrite) by EPA 9056	NA	1	250 mL	Poly Bottle	None	Empirical
Iodide by EPA 300	NA	1	250 mL	Poly Bottle	None	Test America
Reduced Gases by RSKSOP-175/EPA 3810	NA	2	40 mL	VOA Vials	HCl	CB&I
VFA by EPA 300m	NA	2	40 mL	VOA Vials	None	CB&I
QuantArray-Chlor	NA	1	1 L	Poly Bottle	None	Microbial Insights
EDB CSIA	NA	2	1 L	Amber Bottle	HCl	University of Oklahom

Comments/Descriptions. Month 3 Event.

Logged By/Date: [signature] 5/9/18

Reviewed By/Date: _____

Sample Collection Log

500433 KAFB Rapid Response ESTCP – Groundwater, Phase II, Passive

Location Code KAFB-106MW25 RFA/COC Number 500433EDBPT-GW030

Sample Number 106MW25-P2P-050918 Collection Date 5/9/18

Sampling Method low flow Collection Time 0918

Sample Type grab Start Depth 463

QC Code normal End Depth 498

Sampling Equipment bladder pump Sample Matrix GW

QC Partners none Sample Team TK

Containers:

Analytical Suite	Filtered	Qty	Size	Container Type	Preservative	Lab
EDB by 8011	NA	2	40 mL	VOA Vials	None	Empirical
VOCs by 8260	NA	3	40 mL	VOA Vials	HCl	Empirical
Dissolved O-Phosphate by SM4500 PE	Yes	1	250 mL	Poly Bottle	None	Empirical
Dissolved Fe and Mn by 6010	Yes	1	250 mL	Poly Bottle	HNO3	Empirical
Alkalinity by SM2320B Anions (Chloride, Sulfate, Bromide, Nitrate-Nitrite) by EPA 9056	NA	1	250 mL	Poly Bottle	None	Empirical
Iodide by EPA 300	NA	1	250 mL	Poly Bottle	None	Test America
Reduced Gases by RSKSOP-175/EPA 3810	NA	2	40 mL	VOA Vials	HCl	CB&I
VFA by EPA 300m	NA	2	40 mL	VOA Vials	None	CB&I
QuantArray-Chlor	NA	1	1 L	Poly Bottle	None	Microbial Insights
EDB CSIA	NA	2	1 L	Amber Bottle	HCl	University of Oklahom

Comments/Descriptions. Month 3 Event.

Logged By/Date: 5/9/18 ***Reviewed By/Date:***

Sample Collection Log

500433 KAFB Rapid Response ESTCP – Groundwater, Phase II, Passive

Location Code KAFB-106IN1

RFA/COC Number 500433EDBPT-GW030

Sample Number 106IN1-P2P-050918

Collection Date 5/9/18

Sampling Method purge & 2HP pump

Collection Time 1237

Sample Type grab

Start Depth 477

QC Code normal

End Depth 497

Sampling Equipment dedicated pump/ conveyance piping

Sample Matrix GW

QC Partners none

Sample Team TK, CL

Containers:

Analytical Suite	Filtered	Qty	Size	Container Type	Preservative	Lab
EDB by 8011	NA	2	40 mL	VOA Vials	None	Empirical
VOCs by 8260	NA	3	40 mL	VOA Vials	HCl	Empirical
Dissolved O-Phosphate by SM4500 PE	Yes	1	250 mL	Poly Bottle	None	Empirical
Dissolved Fe and Mn by 6010	Yes	1	250 mL	Poly Bottle	HNO3	Empirical
Alkalinity by SM2320B Anions (Chloride, Sulfate, Bromide, Nitrate-Nitrite) by EPA 9056	NA	1	250 mL	Poly Bottle	None	Empirical
Iodide by EPA 300	NA	1	250 mL	Poly Bottle	None	Test America
Reduced Gases by RSKSOP-175/EPA 3810	NA	2	40 mL	VOA Vials	HCl	CB&I
VFA by EPA 300m	NA	2	40 mL	VOA Vials	None	CB&I
QuantArray-Chlor	NA	1	1 L	Poly Bottle	None	Microbial Insights
EDB CSIA	NA	2	1 L	Amber Bottle	HCl	University of Oklahom

Comments/Descriptions. Month 3 Event.

Logged By/Date: [signature] 5/9/18 ***Reviewed By/Date:***

Sample Collection Log

500433 KAFB Rapid Response ESTCP – Groundwater, Phase II, Passive

Location Code KAFB-106EX2

RFA/COC Number 500433EDBPT-GW030

Sample Number 106EX2-P2P-050918

Collection Date 5/9/18

Sampling Method conveyance pipe

Collection Time 1357

Sample Type grab

Start Depth 487

QC Code normal

End Depth 502

Sampling Equipment piping port

Sample Matrix GW

QC Partners none

Sample Team TK, CL

Containers:

Analytical Suite	Filtered	Qty	Size	Container Type	Preservative	Lab
EDB by 8011	NA	2	40 mL	VOA Vials	None	Empirical
VOCs by 8260	NA	3	40 mL	VOA Vials	HCl	Empirical
Dissolved O-Phosphate by SM4500 PE	Yes	1	250 mL	Poly Bottle	None	Empirical
Dissolved Fe and Mn by 6010	Yes	1	250 mL	Poly Bottle	HNO3	Empirical
Alkalinity by SM2320B Anions (Chloride, Sulfate, Bromide, Nitrate-Nitrite) by EPA 9056	NA	1	250 mL	Poly Bottle	None	Empirical
Iodide by EPA 300	NA	1	250 mL	Poly Bottle	None	Test America
Reduced Gases by RSKSOP-175/EPA 3810	NA	2	40 mL	VOA Vials	HCl	CB&I
VFA by EPA 300m	NA	2	40 mL	VOA Vials	None	CB&I
QuantArray-Chlor	NA	1	1 L	Poly Bottle	None	Microbial Insights
EDB CSIA	NA	2	1 L	Amber Bottle	HCl	University of Oklahom

Comments/Descriptions. Month 3 Event.

Logged By/Date: [signature] 5/9/18 ***Reviewed By/Date:***

Sample Collection Log

500433 KAFB Rapid Response ESTCP – Groundwater, Phase II, Passive

Location Code KAFB-106064

RFA/COC Number 500433EDBPT-GW030

Sample Number 106064-P2P-050918

Collection Date 5/9/18

Sampling Method Low Flow

Collection Time 0908

Sample Type Grab

Start Depth ~~508~~ 488

QC Code Normal

End Depth ~~51~~ 508

Sampling Equipment Bladder Pump

Sample Matrix GW

QC Partners 106064-P2P-050918-FD

Sample Team CL

Containers:

Analytical Suite	Filtered	Qty	Size	Container Type	Preservative	Lab
EDB by 8011	NA	2	40 mL	VOA Vials	None	Empirical
VOCs by 8260	NA	3	40 mL	VOA Vials	HCl	Empirical
Dissolved O-Phosphate by SM4500 PE	Yes	1	250 mL	Poly Bottle	None	Empirical
Dissolved Fe and Mn by 6010	Yes	1	250 mL	Poly Bottle	HNO3	Empirical
Alkalinity by SM2320B Anions (Chloride, Sulfate, Bromide, Nitrate-Nitrite) by EPA 9056	NA	1	250 mL	Poly Bottle	None	Empirical
Iodide by EPA 300	NA	1	250 mL	Poly Bottle	None	Test America
Reduced Gases by RSKSOP-175/EPA 3810	NA	2	40 mL	VOA Vials	HCl	CB&I
VFA by EPA 300m	NA	2	40 mL	VOA Vials	None	CB&I
QuantArray-Chlor	NA	1	1 L	Poly Bottle	None	Microbial Insights
EDB CSIA	NA	2	1 L	Amber Bottle	HCl	University of Oklahom

Comments/Descriptions. Month 3 Event.

DTW=477.40 ft btoc. Water has fuel odor.

Logged By/Date: 5/9/18

Reviewed By/Date:

Sample Collection Log

500433 KAFB Rapid Response ESTCP – Groundwater, Phase II, Passive

Location Code KAFB-106MW1-I

RFA/COC Number 500433EDBPT-GW0

Sample Number 106MW1I-P2P-06

Collection Date 6/12/18

Sampling Method Low Flow

Collection Time 1500

Sample Type Grab

Start Depth 513

QC Code Normal

End Depth 523

Sampling Equipment Bladder Pump

Sample Matrix GW

QC Partners N/A

Sample Team CC

Containers:

Analytical Suite	Filtered	Qty	Size	Container Type	Preservative	Lab
EDB by 8011	NA	2	40 mL	VOA Vials	None	Empirical
VOCs by 8260	NA	3	40 mL	VOA Vials	HCl	Empirical
Dissolved O-Phosphate by SM4500 PE	Yes	1	250 mL	Poly Bottle	None	Empirical
Dissolved Fe and Mn by 6010	Yes	1	250 mL	Poly Bottle	HNO3	Empirical
Alkalinity by SM2320B Anions (Chloride, Sulfate, Bromide, Nitrate-Nitrite) by EPA 9056	NA	1	250 mL	Poly Bottle	None	Empirical
Iodide by EPA 300	NA	1	250 mL	Poly Bottle	None	Test America
Reduced Gases by RSKSOP-175/EPA 3810	NA	2	40 mL	VOA Vials	HCl	CB&I
VFA by EPA 300m	NA	2	40 mL	VOA Vials	None	CB&I

Comments/Descriptions. Month 4 Event.

Cannot measure DTW in 3" wells w/ dedicated tubing.

Logged By/Date: 6/12/18

Reviewed By/Date:

Sample Collection Log

500433 KAFB Rapid Response ESTCP – Groundwater, Phase II, Passive

Location Code KAFB-106MW2I

RFA/COC Number 500433-EDBPT-GW031

Sample Number 106MW2I-P2P-061218

Collection Date 6/12/18

Sampling Method low flow

Collection Time 1012

Sample Type grab

Start Depth 513

QC Code normal

End Depth 523

Sampling Equipment bladder pump

Sample Matrix GW

QC Partners none

Sample Team TK, CL

Containers:

Analytical Suite	Filtered	Qty	Size	Container Type	Preservative	Lab
EDB by 8011	NA	2	40 mL	VOA Vials	None	Empirical
VOCs by 8260	NA	3	40 mL	VOA Vials	HCl	Empirical
Dissolved O-Phosphate by SM4500 PE	Yes	1	250 mL	Poly Bottle	None	Empirical
Dissolved Fe and Mn by 6010	Yes	1	250 mL	Poly Bottle	HNO3	Empirical
Alkalinity by SM2320B Anions (Chloride, Sulfate, Bromide, Nitrate-Nitrite) by EPA 9056	NA	1	250 mL	Poly Bottle	None	Empirical
Iodide by EPA 300	NA	1	250 mL	Poly Bottle	None	Test America
Reduced Gases by RSKSOP-175/EPA 3810	NA	2	40 mL	VOA Vials	HCl	CB&I
VFA by EPA 300m	NA	2	40 mL	VOA Vials	None	CB&I

Comments/Descriptions. Month 4 Event.

Logged By/Date: [signature] 6/12/18

Reviewed By/Date: _____

Sample Collection Log

500433 KAFB Rapid Response ESTCP – Groundwater, Phase II, Passive

Location Code KAFB-106063

RFA/COC Number 500433EDBPT-GW03

Sample Number 106063-P2P-061218

Collection Date 6/12/18

Sampling Method low flow

Collection Time 1517

Sample Type grab

Start Depth 508

QC Code normal

End Depth 523

Sampling Equipment bladder pump

Sample Matrix GW

QC Partners none

Sample Team TK

Containers:

Analytical Suite	Filtered	Qty	Size	Container Type	Preservative	Lab
EDB by 8011	NA	2	40 mL	VOA Vials	None	Empirical
VOCs by 8260	NA	3	40 mL	VOA Vials	HCl	Empirical
Dissolved O-Phosphate by SM4500 PE	Yes	1	250 mL	Poly Bottle	None	Empirical
Dissolved Fe and Mn by 6010	Yes	1	250 mL	Poly Bottle	HNO3	Empirical
Alkalinity by SM2320B Anions (Chloride, Sulfate, Bromide, Nitrate-Nitrite) by EPA 9056	NA	1	250 mL	Poly Bottle	None	Empirical
Iodide by EPA 300	NA	1	250 mL	Poly Bottle	None	Test America
Reduced Gases by RSKSOP-175/EPA 3810	NA	2	40 mL	VOA Vials	HCl	CB&I
VFA by EPA 300m	NA	2	40 mL	VOA Vials	None	CB&I

Comments/Descriptions. Month 4 Event.

Logged By/Date: [signature] 6/12/18

Reviewed By/Date: _____

Sample Collection Log

500433 KAFB Rapid Response ESTCP – Groundwater, Phase II, Passive

Location Code KAFB-106MW2-S

RFA/COC Number 500433EDBPT-GW032

Sample Number 106MW2S-P2P-061418

Collection Date 6/14/18

Sampling Method Low Flow

Collection Time 0908

Sample Type Grab

Start Depth 463

QC Code Normal

End Depth 498

Sampling Equipment Bladder Pump

Sample Matrix GW

QC Partners N/A

Sample Team CL

Containers:

Analytical Suite	Filtered	Qty	Size	Container Type	Preservative	Lab
EDB by 8011	NA	2	40 mL	VOA Vials	None	Empirical
VOCs by 8260	NA	3	40 mL	VOA Vials	HCl	Empirical
Dissolved O-Phosphate by SM4500 PE	Yes	1	250 mL	Poly Bottle	None	Empirical
Dissolved Fe and Mn by 6010	Yes	1	250 mL	Poly Bottle	HNO3	Empirical
Alkalinity by SM2320B Anions (Chloride, Sulfate, Bromide, Nitrate-Nitrite) by EPA 9056	NA	1	250 mL	Poly Bottle	None	Empirical
Iodide by EPA 300	NA	1	250 mL	Poly Bottle	None	Test America
Reduced Gases by RSKSOP-175/EPA 3810	NA	2	40 mL	VOA Vials	HCl	CB&I
VFA by EPA 300m	NA	2	40 mL	VOA Vials	None	CB&I

Comments/Descriptions. Month 4 Event.

Cannot measure DTW at this well. There is a tubing obstruction.

Logged By/Date: 6/14/18

Reviewed By/Date:

Sample Collection Log

500433 KAFB Rapid Response ESTCP – Groundwater, Phase II, Passive

Location Code KAFB-106EX2

RFA/COC Number 500433EDBPT-GW082

Sample Number 106EX2-PZP-061418

Collection Date 6/14/18

Sampling Method conveyance pipe, SHP pump

Collection Time TSK ~~487~~ 1528

Sample Type grab

Start Depth TSK ~~502~~ 487

QC Code normal

End Depth 502

Sampling Equipment pipe, port

Sample Matrix GW

QC Partners none

Sample Team TK, CL

Containers:

Analytical Suite	Filtered	Qty	Size	Container Type	Preservative	Lab
EDB by 8011	NA	2	40 mL	VOA Vials	None	Empirical
VOCs by 8260	NA	3	40 mL	VOA Vials	HCl	Empirical
Dissolved O-Phosphate by SM4500 PE	Yes	1	250 mL	Poly Bottle	None	Empirical
Dissolved Fe and Mn by 6010	Yes	1	250 mL	Poly Bottle	HNO3	Empirical
Alkalinity by SM2320B Anions (Chloride, Sulfate, Bromide, Nitrate-Nitrite) by EPA 9056	NA	1	250 mL	Poly Bottle	None	Empirical
Iodide by EPA 300	NA	1	250 mL	Poly Bottle	None	Test America
Reduced Gases by RSKSOP-175/EPA 3810	NA	2	40 mL	VOA Vials	HCl	CB&I
VFA by EPA 300m	NA	2	40 mL	VOA Vials	None	CB&I

Comments/Descriptions. Month 4 Event.

turbidity higher than normal starting purge, ~16 NTU

Logged By/Date: [signature] 6/14/18

Reviewed By/Date: _____

Sample Collection Log

500433 KAFB Rapid Response ESTCP – Groundwater, Phase II, Passive

Location Code KAFB-106EX1

RFA/COC Number 500433EDBPT-GW032

Sample Number 106EX1-PZP-061418

Collection Date 6/14/18

Sampling Method conveyance piping, SHP pump

Collection Time 1430

Sample Type grab

Start Depth 487

QC Code normal

End Depth 502

Sampling Equipment pipe, port

Sample Matrix GW

QC Partners none

Sample Team TK, CL

Containers:

Analytical Suite	Filtered	Qty	Size	Container Type	Preservative	Lab
EDB by 8011	NA	2	40 mL	VOA Vials	None	Empirical
VOCs by 8260	NA	3	40 mL	VOA Vials	HCl	Empirical
Dissolved O-Phosphate by SM4500 PE	Yes	1	250 mL	Poly Bottle	None	Empirical
Dissolved Fe and Mn by 6010	Yes	1	250 mL	Poly Bottle	HNO3	Empirical
Alkalinity by SM2320B Anions (Chloride, Sulfate, Bromide, Nitrate-Nitrite) by EPA 9056	NA	1	250 mL	Poly Bottle	None	Empirical
Iodide by EPA 300	NA	1	250 mL	Poly Bottle	None	Test America
Reduced Gases by RSKSOP-175/EPA 3810	NA	2	40 mL	VOA Vials	HCl	CB&I
VFA by EPA 300m	NA	2	40 mL	VOA Vials	None	CB&I

Comments/Descriptions. Month 4 Event.

Logged By/Date: [signature] 6/14/18

Reviewed By/Date: _____

Sample Collection Log

500433 KAFB Rapid Response ESTCP – Groundwater, Phase II, Passive

Location Code KAFB-106INJ

RFA/COC Number 500433EDBPT-GW032

Sample Number 106INJ-02P-061418

Collection Date 6/14/18

Sampling Method low flow/piping conveyance line

Collection Time 1312

Sample Type grab

Start Depth 477

QC Code normal

End Depth 497

Sampling Equipment conveyance line, sample port

Sample Matrix GW

QC Partners none

Sample Team TK, CL

Containers:

Analytical Suite	Filtered	Qty	Size	Container Type	Preservative	Lab
EDB by 8011	NA	2	40 mL	VOA Vials	None	Empirical
VOCs by 8260	NA	3	40 mL	VOA Vials	HCl	Empirical
Dissolved O-Phosphate by SM4500 PE	Yes	1	250 mL	Poly Bottle	None	Empirical
Dissolved Fe and Mn by 6010	Yes	1	250 mL	Poly Bottle	HNO3	Empirical
Alkalinity by SM2320B Anions (Chloride, Sulfate, Bromide, Nitrate-Nitrite) by EPA 9056	NA	1	250 mL	Poly Bottle	None	Empirical
Iodide by EPA 300	NA	1	250 mL	Poly Bottle	None	Test America
Reduced Gases by RSKSOP-175/EPA 3810	NA	2	40 mL	VOA Vials	HCl	CB&I
VFA by EPA 300m	NA	2	40 mL	VOA Vials	None	CB&I

Comments/Descriptions. Month 4 Event.

Logged By/Date: [signature] 6/14/18

Reviewed By/Date: _____

Sample Collection Log

500433 KAFB Rapid Response ESTCP – Groundwater, Phase II, Passive

Location Code KAFB-106064

RFA/COC Number 500433EDBPT-GW032

Sample Number 106064-P2P-061418

Collection Date 6/14/18

Sampling Method low flow

Collection Time 1008

Sample Type grab

Start Depth 488

QC Code normal, FD

End Depth 523

Sampling Equipment bladder pump

Sample Matrix GW

QC Partners 106064-P2P-061418-FD

Sample Team TK

Containers:

Analytical Suite	Filtered	Qty	Size	Container Type	Preservative	Lab
EDB by 8011	NA	2	40 mL	VOA Vials	None	Empirical
VOCs by 8260	NA	3	40 mL	VOA Vials	HCl	Empirical
Dissolved O-Phosphate by SM4500 PE	Yes	1	250 mL	Poly Bottle	None	Empirical
Dissolved Fe and Mn by 6010	Yes	1	250 mL	Poly Bottle	HNO3	Empirical
Alkalinity by SM2320B Anions (Chloride, Sulfate, Bromide, Nitrate-Nitrite) by EPA 9056	NA	1	250 mL	Poly Bottle	None	Empirical
Iodide by EPA 300	NA	1	250 mL	Poly Bottle	None	Test America
Reduced Gases by RSKSOP-175/EPA 3810	NA	2	40 mL	VOA Vials	HCl	CB&I
VFA by EPA 300m	NA	2	40 mL	VOA Vials	None	CB&I

Comments/Descriptions. Month 4 Event.

FD collected here. pH seems lower than previous events (more acidic). Turbidity high to start, finally dropping over 1hr into purge time, stable around 12 NTU

Logged By/Date: [signature] 6/14/18

Reviewed By/Date: _____

Sample Collection Log

500433 KAFB Rapid Response ESTCP – Groundwater, Phase II, Passive

Location Code KAFB-106MW1-5

RFA/COC Number 500433EDBPT-GW032

Sample Number 106MW1S-P2P-061418

Collection Date 6/14/18

Sampling Method low flow

Collection Time 0811

Sample Type grab

Start Depth 463

QC Code normal

End Depth 498

Sampling Equipment bladder pump

Sample Matrix GW

QC Partners none

Sample Team TK, CL

Containers:

Analytical Suite	Filtered	Qty	Size	Container Type	Preservative	Lab
EDB by 8011	NA	2	40 mL	VOA Vials	None	Empirical
VOCs by 8260	NA	3	40 mL	VOA Vials	HCl	Empirical
Dissolved O-Phosphate by SM4500 PE	Yes	1	250 mL	Poly Bottle	None	Empirical
Dissolved Fe and Mn by 6010	Yes	1	250 mL	Poly Bottle	HNO3	Empirical
Alkalinity by SM2320B Anions (Chloride, Sulfate, Bromide, Nitrate-Nitrite) by EPA 9056	NA	1	250 mL	Poly Bottle	None	Empirical
Iodide by EPA 300	NA	1	250 mL	Poly Bottle	None	Test America
Reduced Gases by RSKSOP-175/EPA 3810	NA	2	40 mL	VOA Vials	HCl	CB&I
VFA by EPA 300m	NA	2	40 mL	VOA Vials	None	CB&I

Comments/Descriptions. Month 4 Event.

Note: high turbidity during purge. Observed thin, light filaments of biological material floating in turbidity vial. Cleared up to below 10 NTU after about 50 min of purge.

Logged By/Date: [signature] 6/14/18

Reviewed By/Date: _____

Sample Collection Log

500433 KAFB Rapid Response ESTCP – Groundwater, Phase II, Passive

Location Code KAFB-106MW2I

RFA/COC Number 500433EDBPT-GW033

Sample Number 106MW2I-P3R-080718

Collection Date 8/7/18

Sampling Method low flow

Collection Time 1411

Sample Type grab

Start Depth 513

QC Code normal

End Depth 523

Sampling Equipment bladder pump

Sample Matrix GW

QC Partners none

Sample Team TK

Containers:

Analytical Suite	Filtered	Qty	Size	Container Type	Preservative	Lab
EDB by 8011	NA	2	40 mL	VOA Vials	None	Empirical
VOCs by 8260	NA	3	40 mL	VOA Vials	HCl	Empirical
Dissolved O-Phosphate by SM4500 PE	Yes	1	250 mL	Poly Bottle	None	Empirical
Dissolved Fe and Mn by 6010	Yes	1	250 mL	Poly Bottle	HNO3	Empirical
Alkalinity by SM2320B Anions (Chloride, Sulfate, Bromide, Nitrate-Nitrite) by EPA 9056	NA	1	250 mL	Poly Bottle	None	Empirical
Iodide by EPA 300	NA	1	250 mL	Poly Bottle	None	Test America
Reduced Gases by RSKSOP-175/EPA 3810	NA	2	40 mL	VOA Vials	HCl	CB&I
VFA by EPA 300m	NA	2	40 mL	VOA Vials	None	CB&I

Comments/Descriptions. Month 4 Event.

Phase 3 (biostim), 1st sample event of active injection portion.

Logged By/Date: [illegible] 8/7/18

Reviewed By/Date: _____

Sample Collection Log

500433 KAFB Rapid Response ESTCP – Groundwater, Phase III, Recirculation

Location Code KAFB-106MW2S

RFA/COC Number 500433EDBPT-GW033

Sample Number 106MW2S-P3R-080718

Collection Date 8/7/18

Sampling Method low flow

Collection Time 1021

Sample Type grab

Start Depth 483

QC Code normal

End Depth 498

Sampling Equipment bladder pump

Sample Matrix GW

QC Partners none

Sample Team TK

Containers:

Analytical Suite	Filtered	Qty	Size	Container Type	Preservative	Lab
EDB by 8011	NA	2	40 mL	VOA Vials	None	Empirical
VOCs by 8260	NA	3	40 mL	VOA Vials	HCl	Empirical
O-Phosphate by SM4500 PE	Yes	1	250 mL	Poly Bottle	None	Empirical
Dissolved Fe and Mn by 6010	Yes	1	250 mL	Poly Bottle	HNO3	Empirical
Alkalinity by SM2320B Anions (Chloride, Sulfate, Bromide, Nitrate-Nitrite) by EPA 9056	NA	1	250 mL	Poly Bottle	None	Empirical
Iodide by EPA 300	NA	1	100 mL	Poly Bottle	None	Test America
Reduced Gases by RSKSOP-175/EPA 3810	NA	2	40 mL	VOA Vials	HCl	CB&I
VFA by EPA 300m	NA	2	40 mL	VOA Vials	None	CB&I

Comments/Descriptions.

phase 3 (biostim), 1st sample event of active injection portion. Water has slight odor of fuel and fouling. No abnormal color noted, no obvious suspended solids.

Logged By/Date: [signature] 8/7/18

Reviewed By/Date: _____

Sample Collection Log

500433 KAFB Rapid Response ESTCP – Groundwater, Phase III, Recirculation

Location Code KAFB-106MW1-S

RFA/COC Number 500433EDBPT-GW033

Sample Number 106MW1S-P3R-080718

Collection Date 8/07/18

Sampling Method Low Flow

Collection Time 1318

Sample Type Grab

Start Depth 463

QC Code Normal

End Depth 498

Sampling Equipment Bladder Pump

Sample Matrix GW

QC Partners None

Sample Team CL, TK

Containers:

Analytical Suite	Filtered	Qty	Size	Container Type	Preservative	Lab
EDB by 8011	NA	2	40 mL	VOA Vials	None	Empirical
VOCs by 8260	NA	3	40 mL	VOA Vials	HCl	Empirical
O-Phosphate by SM4500 PE	Yes	1	250 mL	Poly Bottle	None	Empirical
Dissolved Fe and Mn by 6010	Yes	1	250 mL	Poly Bottle	HNO3	Empirical
Alkalinity by SM2320B Anions (Chloride, Sulfate, Bromide, Nitrate-Nitrite) by EPA 9056	NA	1	250 mL	Poly Bottle	None	Empirical
Iodide by EPA 300	NA	1	100 mL	Poly Bottle	None	Test America
Reduced Gases by RSKSOP-175/EPA 3810	NA	2	40 mL	VOA Vials	HCl	CB&I
VFA by EPA 300m	NA	2	40 mL	VOA Vials	None	CB&I

Comments/Descriptions: DTWi = 474.64 ft btoc.

Logged By/Date: 8/7/18

Reviewed By/Date:

Sample Collection Log

500433 KAFB Rapid Response ESTCP – Groundwater, Phase III, Recirculation

Location Code KAFB-106MW1-I

RFA/COC Number 500433EDBPT-GW033

Sample Number 106MW1I-P3R-080718

Collection Date 8/7/18

Sampling Method Low Flow

Collection Time 1030

Sample Type Grab

Start Depth 513

QC Code None/Normal

End Depth 523

Sampling Equipment Bladder Pump

Sample Matrix GW

QC Partners None

Sample Team CL, TK

Containers:

Analytical Suite	Filtered	Qty	Size	Container Type	Preservative	Lab
EDB by 8011	NA	2	40 mL	VOA Vials	None	Empirical
VOCs by 8260	NA	3	40 mL	VOA Vials	HCl	Empirical
O-Phosphate by SM4500 PE	Yes	1	250 mL	Poly Bottle	None	Empirical
Dissolved Fe and Mn by 6010	Yes	1	250 mL	Poly Bottle	HNO3	Empirical
Alkalinity by SM2320B Anions (Chloride, Sulfate, Bromide, Nitrate-Nitrite) by EPA 9056	NA	1	250 mL	Poly Bottle	None	Empirical
Iodide by EPA 300	NA	1	100 mL	Poly Bottle	None	Test America
Reduced Gases by RSKSOP-175/EPA 3810	NA	2	40 mL	VOA Vials	HCl	CB&I
VFA by EPA 300m	NA	2	40 mL	VOA Vials	None	CB&I

Comments/Descriptions: DTW = 474.~~8~~64 ft btoc, as measured at 106MW1-S.
Cannot fit probe down 3" well w/ tubing bundle.
Slight fuel odor. Water is clear.

Logged By/Date: CL 8/7/18

Reviewed By/Date: _____

Sample Collection Log

500433 KAFB Rapid Response ESTCP – Groundwater, Phase II, Passive

Location Code KAFB-106063

RFA/COC Number 500433EDBPT-GW03Y

Sample Number 106063-P3R-080818

Collection Date 8/8/18

Sampling Method low flow

Collection Time 0957

Sample Type grab

Start Depth 508

QC Code normal

End Depth 523

Sampling Equipment bladder pump

Sample Matrix GW

QC Partners none

Sample Team TK

Containers:

Analytical Suite	Filtered	Qty	Size	Container Type	Preservative	Lab
EDB by 8011	NA	2	40 mL	VOA Vials	None	Empirical
VOCs by 8260	NA	3	40 mL	VOA Vials	HCl	Empirical
Dissolved O-Phosphate by SM4500 PE	Yes	1	250 mL	Poly Bottle	None	Empirical
Dissolved Fe and Mn by 6010	Yes	1	250 mL	Poly Bottle	HNO3	Empirical
Alkalinity by SM2320B Anions (Chloride, Sulfate, Bromide, Nitrate-Nitrite) by EPA 9056	NA	1	250 mL	Poly Bottle	None	Empirical
Iodide by EPA 300	NA	1	250 mL	Poly Bottle	None	Test America
Reduced Gases by RSKSOP-175/EPA 3810	NA	2	40 mL	VOA Vials	HCl	CB&I
VFA by EPA 300m	NA	2	40 mL	VOA Vials	None	CB&I

Comments/Descriptions. Month 4 Event.

1st event active recirculation part of phase 3.
Water has slight foul odor, sewage smell.

Logged By/Date: [signature] 8/8/18

Reviewed By/Date: _____

Sample Collection Log

500433 KAFB Rapid Response ESTCP – Groundwater, Phase III, Recirculation

Location Code KAFB-106EX1

RFA/COC Number 500433EDBPT-GW034

Sample Number 106EX1-P3R-080818

Collection Date 8/8/18

Sampling Method low flow

Collection Time 1156

Sample Type grab

Start Depth 487

QC Code normal

End Depth 502

Sampling Equipment ~~bladder pump~~ conveyance pipe

Sample Matrix GW

QC Partners none

Sample Team TK, CL

Containers:

Analytical Suite	Filtered	Qty	Size	Container Type	Preservative	Lab
EDB by 8011	NA	2	40 mL	VOA Vials	None	Empirical
VOCs by 8260	NA	3	40 mL	VOA Vials	HCl	Empirical
O-Phosphate by SM4500 PE	Yes	1	250 mL	Poly Bottle	None	Empirical
Dissolved Fe and Mn by 6010	Yes	1	250 mL	Poly Bottle	HNO3	Empirical
Alkalinity by SM2320B	NA	1	250 mL	Poly Bottle	None	Empirical
Anions (Chloride, Sulfate, Bromide, Nitrate-Nitrite) by EPA 9056						
Iodide by EPA 300	NA	1	100 mL	Poly Bottle	None	Test America
Reduced Gases by RSKSOP-175/EPA 3810	NA	2	40 mL	VOA Vials	HCl	CB&I
VFA by EPA 300m	NA	2	40 mL	VOA Vials	None	CB&I

Comments/Descriptions.

1st sample event of active part of Phase 3 (bioSTIMs).
Slight fuel odor.

Logged By/Date: [signature] 8/8/18

Reviewed By/Date: _____

Sample Collection Log

500433 KAFB Rapid Response ESTCP – Groundwater, Phase III, Recirculation

Location Code KAFB-106EX2

RFA/COC Number 500433EDBPT-GW034

Sample Number 106EX2-P3R-080818

Collection Date 8/8/18

Sampling Method low-flow

Collection Time 1236

Sample Type grab

Start Depth 487

QC Code FD

End Depth 502

Sampling Equipment Conveyance pipe

Sample Matrix GW

QC Partners 106EX2-P3R-080818-FD

Sample Team TK, CL

Containers:

Analytical Suite	Filtered	Qty	Size	Container Type	Preservative	Lab
EDB by 8011	NA	2	40 mL	VOA Vials	None	Empirical
VOCs by 8260	NA	3	40 mL	VOA Vials	HCl	Empirical
O-Phosphate by SM4500 PE	Yes	1	250 mL	Poly Bottle	None	Empirical
Dissolved Fe and Mn by 6010	Yes	1	250 mL	Poly Bottle	HNO3	Empirical
Alkalinity by SM2320B Anions (Chloride, Sulfate, Bromide, Nitrate-Nitrite) by EPA 9056	NA	1	250 mL	Poly Bottle	None	Empirical
Iodide by EPA 300	NA	1	100 mL	Poly Bottle	None	Test America
Reduced Gases by RSKSOP-175/EPA 3810	NA	2	40 mL	VOA Vials	HCl	CB&I
VFA by EPA 300m	NA	2	40 mL	VOA Vials	None	CB&I

Comments/Descriptions:

1st sample event active recirc part of Phase 3 (biostim)
Foul odor of sewage.

Logged By/Date: [signature] 8/8/18

Reviewed By/Date: _____

Sample Collection Log

500433 KAFB Rapid Response ESTCP – Groundwater, Phase III, Recirculation

Location Code KAFB-106064

RFA/COC Number 500433EDBPT-GW034

Sample Number 106064-P3R-080818

Collection Date 8/8/18

Sampling Method Low Flow

Collection Time 0915

Sample Type Grab

Start Depth 488

QC Code Normal

End Depth 508

Sampling Equipment Bladder Pump

Sample Matrix GW

QC Partners None

Sample Team a

Containers:

Analytical Suite	Filtered	Qty	Size	Container Type	Preservative	Lab
EDB by 8011	NA	2	40 mL	VOA Vials	None	Empirical
VOCs by 8260	NA	3	40 mL	VOA Vials	HCl	Empirical
O-Phosphate by SM4500 PE	Yes	1	250 mL	Poly Bottle	None	Empirical
Dissolved Fe and Mn by 6010	Yes	1	250 mL	Poly Bottle	HNO3	Empirical
Alkalinity by SM2320B Anions (Chloride, Sulfate, Bromide, Nitrate-Nitrite) by EPA 9056	NA	1	250 mL	Poly Bottle	None	Empirical
Iodide by EPA 300	NA	1	100 mL	Poly Bottle	None	Test America
Reduced Gases by RSKSOP-175/EPA 3810	NA	2	40 mL	VOA Vials	HCl	CB&I
VFA by EPA 300m	NA	2	40 mL	VOA Vials	None	CB&I

Comments/Descriptions: DTWi = 478.02 ft btoc. Slight fuel odor.

Logged By/Date: [signature] 8/8/18

Reviewed By/Date: _____

Sample Collection Log

500433 KAFB Rapid Response ESTCP – Groundwater, Phase III, Recirculation

Location Code KAFB-106MW2 I

RFA/COC Number 500433EDBPT-GW035

Sample Number 106MW2I-P3R-081518

Collection Date 8/15/18

Sampling Method low flow

Collection Time 0946

Sample Type grab

Start Depth 513

QC Code normal

End Depth 523

Sampling Equipment bladder pump

Sample Matrix GW

QC Partners none

Sample Team TK

Containers:

Analytical Suite	Filtered	Qty	Size	Container Type	Preservative	Lab
EDB by 8011	NA	2	40 mL	VOA Vials	None	Test America GA
VOCs by 8260	NA	3	40 mL	VOA Vials	HCl	Test America GA
O-Phosphate by SM4500 PE	Yes	1	250 mL	Poly Bottle	None	Test America CA
Dissolved Fe and Mn by 6010	Yes	1	250 mL	Poly Bottle	HNO3	Test America GA
Alkalinity by SM2320B	NA	1	250 mL	Poly Bottle	None	Test America GA
Anions (Chloride, Sulfate, Bromide, Nitrate-Nitrite) by EPA 9056	NA	1	150 mL	Poly Bottle	None	
Iodide by EPA 300	NA	1	100 mL	Poly Bottle	None	Test America MO
Reduced Gases by RSKSOP-175/EPA 3810	NA	2	40 mL	VOA Vials	HCl	CB&I
VFA by EPA 300m	NA	2	40 mL	VOA Vials	None	CB&I

Comments/Descriptions.

Phase 3 recirc, event #2. Note new labs for some analyses

Logged By/Date: [signature] 8/15/18

Reviewed By/Date:

Sample Collection Log

500433 KAFB Rapid Response ESTCP – Groundwater, Phase III, Recirculation

Location Code KAFB-106MW25

RFA/COC Number 500433EDBPT-GW035

Sample Number 106MW25-P3R-081518

Collection Date 8/15/18

Sampling Method low flow

Collection Time 1133

Sample Type grab

Start Depth 463

QC Code normal

End Depth 498

Sampling Equipment bladder pump

Sample Matrix GW

QC Partners none

Sample Team TK

Containers:

Analytical Suite	Filtered	Qty	Size	Container Type	Preservative	Lab
EDB by 8011	NA	2	40 mL	VOA Vials	None	Test America GA
VOCs by 8260	NA	3	40 mL	VOA Vials	HCl	Test America GA
O-Phosphate by SM4500 PE	Yes	1	250 mL	Poly Bottle	None	Test America CA
Dissolved Fe and Mn by 6010	Yes	1	250 mL	Poly Bottle	HNO3	Test America GA
Alkalinity by SM2320B	NA	1	250 mL	Poly Bottle	None	Test America GA
Anions (Chloride, Sulfate, Bromide, Nitrate-Nitrite) by EPA 9056	NA	1	150 mL	Poly Bottle	None	
Iodide by EPA 300	NA	1	100 mL	Poly Bottle	None	Test America MO
Reduced Gases by RSKSOP-175/EPA 3810	NA	2	40 mL	VOA Vials	HCl	CB&I
VFA by EPA 300m	NA	2	40 mL	VOA Vials	None	CB&I

Comments/Descriptions.

phase 3 recirc, sample event #2. Note new lag for several analyses.

Note: small, pale filaments suspended in purge water, appear biological.

Logged By/Date: [signature] 8/15/18

Reviewed By/Date: _____

Sample Collection Log

500433 KAFB Rapid Response ESTCP – Groundwater, Phase III, Recirculation

Location Code KAFB-106MW1-I

RFA/COC Number 500433EDBPT-GW035

Sample Number 106MW1I-P3R-081518

Collection Date 8/15/18

Sampling Method Low Flow

Collection Time 0940

Sample Type Grab

Start Depth 513

QC Code Normal

End Depth 523

Sampling Equipment Bladder Pump

Sample Matrix GW

QC Partners None

Sample Team CL

Containers:

Analytical Suite	Filtered	Qty	Size	Container Type	Preservative	Lab
EDB by 8011	NA	~~2~~ 3	40 mL	VOA Vials	~~None~~ HCl	Test America GA
VOCs by 8260	NA	3	40 mL	VOA Vials	HCl	Test America GA
O-Phosphate by SM4500 PE	Yes	1	250 mL	Poly Bottle	None	Test America CA
Dissolved Fe and Mn by 6010	Yes	1	250 mL	Poly Bottle	HNO3	Test America GA
Alkalinity by SM2320B	NA	1	250 mL	Poly Bottle	None	Test America GA
Anions (Chloride, Sulfate, Bromide, Nitrate-Nitrite) by EPA 9056	NA	1	150 mL	Poly Bottle	None	
Iodide by EPA 300	NA	1	100 mL	Poly Bottle	None	Test America MO
Reduced Gases by RSKSOP-175/EPA 3810	NA	2	40 mL	VOA Vials	HCl	CB&I
VFA by EPA 300m	NA	2	40 mL	VOA Vials	None	CB&I

Week 3 event

Comments/Descriptions: Cannot fit WL probe down 3" well w/ tubing bundle. Slight fuel odor.

Logged By/Date: CL 8/15/18

Reviewed By/Date: _____

Sample Collection Log

500433 KAFB Rapid Response ESTCP – Groundwater, Phase III, Recirculation

Location Code KAFB-106MW1-S

RFA/COC Number 500433EDBPT-GW035

Sample Number 106MW1S-P3R-081518

Collection Date 8/15/18

Sampling Method Low Flow

Collection Time 1130

Sample Type Grab

Start Depth 463

QC Code Normal

End Depth 498

Sampling Equipment Bladder pump

Sample Matrix GW

QC Partners None

Sample Team CL

Containers:

Analytical Suite	Filtered	Qty	Size	Container Type	Preservative	Lab
EDB by 8011	NA	~~2~~ 3	40 mL	VOA Vials	~~None~~ HCl	Test America GA
VOCs by 8260	NA	3	40 mL	VOA Vials	HCl	Test America GA
O-Phosphate by SM4500 PE	Yes	1	250 mL	Poly Bottle	None	Test America CA
Dissolved Fe and Mn by 6010	Yes	1	250 mL	Poly Bottle	HNO3	Test America GA
Alkalinity by SM2320B	NA	1	250 mL	Poly Bottle	None	Test America GA
Anions (Chloride, Sulfate, Bromide, Nitrate-Nitrite) by EPA 9056	NA	1	150 mL	Poly Bottle	None	
Iodide by EPA 300	NA	1	100 mL	Poly Bottle	None	Test America MO
Reduced Gases by RSKSOP-175/EPA 3810	NA	2	40 mL	VOA Vials	HCl	CB&I
VFA by EPA 300m	NA	2	40 mL	VOA Vials	None	CB&I

Week 3 event

Comments/Descriptions. DTWi = 474.63 ft btoc. Slight fuel odor.

Logged By/Date: [signature] 8/15/18

Reviewed By/Date: _____

APTIM

Sample Collection Log

500433 KAFB Rapid Response ESTCP – Groundwater, Phase III, Recirculation

Location Code KAFB-106064

RFA/COC Number 500433EDBPT-GW036

Sample Number 106064-P3R-081618

Collection Date 8/16/18

Sampling Method Low Flow

Collection Time 0930

Sample Type Grab

Start Depth 488

QC Code Normal

End Depth 508

Sampling Equipment Bladder Pump

Sample Matrix ~~GW~~ GW

QC Partners None

Sample Team CL

Containers:

Analytical Suite	Filtered	Qty	Size	Container Type	Preservative	Lab
EDB by 8011	NA	3	40 mL	VOA Vials	HCl	Test America GA
VOCs by 8260	NA	3	40 mL	VOA Vials	HCl	Test America GA
O-Phosphate by ~~SM4500 PE~~ 9056	Yes	1	250 mL	Poly Bottle	None	Test America CA
Dissolved Fe and Mn by 6010	Yes	1	250 mL	Poly Bottle	HNO3	Test America GA
Alkalinity by SM2320B	NA	1	250 mL	Poly Bottle	None	Test America GA
Anions (Chloride, Sulfate, Bromide, Nitrate-Nitrite) by EPA 9056	NA	1	125 mL	Poly Bottle	None	
Iodide by EPA 300	NA	1	250 mL	Poly Bottle	None	Test America MO
Reduced Gases by RSKSOP-175/EPA 3810	NA	2	40 mL	VOA Vials	HCl	APTIM
VFA by EPA 300m	NA	2	40 mL	VOA Vials	None	APTIM

Comments/Descriptions: DTW: ~~478~~ 478.12 ft btoc

Water has slight fouling smell.

Logged By/Date: CL 8/16/18

Reviewed By/Date: _____

APTIM

Sample Collection Log

500433 KAFB Rapid Response ESTCP – Groundwater, Phase III, Recirculation

Location Code KAFB-106063

RFA/COC Number 500433EDBPT-GW036

Sample Number 106063-P3R-081618

Collection Date 8/16/18

Sampling Method low flow

Collection Time 0947

Sample Type grab

Start Depth 508

QC Code normal

End Depth 523

Sampling Equipment bladder pump

Sample Matrix GW

QC Partners none

Sample Team TK

Containers:

Analytical Suite	Filtered	Qty	Size	Container Type	Preservative	Lab
EDB by 8011	NA	3	40 mL	VOA Vials	HCl	Test America GA
VOCs by 8260	NA	3	40 mL	VOA Vials	HCl	Test America GA
O-Phosphate by SM4500 PE	Yes	1	250 mL	Poly Bottle	None	Test America CA
Dissolved Fe and Mn by 6010	Yes	1	250 mL	Poly Bottle	HNO3	Test America GA
Alkalinity by SM2320B	NA	1	250 mL	Poly Bottle	None	Test America GA
Anions (Chloride, Sulfate, Bromide, Nitrate-Nitrite) by EPA 9056	NA	1	125 mL	Poly Bottle	None	
Iodide by EPA 300	NA	1	250 mL	Poly Bottle	None	Test America MO
Reduced Gases by RSKSOP-175/EPA 3810	NA	2	40 mL	VOA Vials	HCl	APTIM
VFA by EPA 300m	NA	2	40 mL	VOA Vials	None	APTIM

Comments/Descriptions.

phase 3 recirc, event #2. Note new lab for many analyses.

Logged By/Date: [signature] 8/16/18

Reviewed By/Date: _____

APTIM

Sample Collection Log

500433 KAFB Rapid Response ESTCP – Groundwater, Phase III, Recirculation

Location Code KAFB-106EX1

RFA/COC Number 500433EDBPT-GW036

Sample Number 106EX1-P3R-081618

Collection Date 8/16/18

Sampling Method piping/conveyance line

Collection Time 1112

Sample Type grab

Start Depth 487

QC Code normal

End Depth 502

Sampling Equipment sample port

Sample Matrix GW

QC Partners 106EX1-P3R-081618-FD

Sample Team TK, CL

Containers:

Analytical Suite	Filtered	Qty	Size	Container Type	Preservative	Lab
EDB by 8011	NA	3	40 mL	VOA Vials	HCl	Test America GA
VOCs by 8260	NA	3	40 mL	VOA Vials	HCl	Test America GA
O-Phosphate by SM4500 PE	Yes	1	250 mL	Poly Bottle	None	Test America CA
Dissolved Fe and Mn by 6010	Yes	1	250 mL	Poly Bottle	HNO3	Test America GA
Alkalinity by SM2320B	NA	1	250 mL	Poly Bottle	None	Test America GA
Anions (Chloride, Sulfate, Bromide, Nitrate-Nitrite) by EPA 9056	NA	1	125 mL	Poly Bottle	None	
Iodide by EPA 300	NA	1	250 mL	Poly Bottle	None	Test America MO
Reduced Gases by RSKSOP-175/EPA 3810	NA	2	40 mL	VOA Vials	HCl	APTIM
VFA by EPA 300m	NA	2	40 mL	VOA Vials	None	APTIM

Comments/Descriptions:

Phase 3 recirc, event #2. Note new labs for some analyses. FD collected. Note, water has foul, biological odor.

Logged By/Date: [signature] 8/16/18

Reviewed By/Date: _____

APTIM

Sample Collection Log

500433 KAFB Rapid Response ESTCP – Groundwater, Phase III, Recirculation

Location Code KAFB-106EX2

RFA/COC Number 500433EDBPT-GW036

Sample Number 106EX2-83R-081618

Collection Date 8/16/18

Sampling Method Conveyance piping port

Collection Time 1237

Sample Type grab

Start Depth 487

QC Code normal

End Depth 502

Sampling Equipment Sample port

Sample Matrix GW

QC Partners none

Sample Team TK, CL

Containers:

Analytical Suite	Filtered	Qty	Size	Container Type	Preservative	Lab
EDB by 8011	NA	3	40 mL	VOA Vials	HCl	Test America GA
VOCs by 8260	NA	3	40 mL	VOA Vials	HCl	Test America GA
O-Phosphate by SM4500 PE	Yes	1	250 mL	Poly Bottle	None	Test America CA
Dissolved Fe and Mn by 6010	Yes	1	250 mL	Poly Bottle	HNO3	Test America GA
Alkalinity by SM2320B	NA	1	250 mL	Poly Bottle	None	Test America GA
Anions (Chloride, Sulfate, Bromide, Nitrate-Nitrite) by EPA 9056	NA	1	125 mL	Poly Bottle	None	
Iodide by EPA 300	NA	1	250 mL	Poly Bottle	None	Test America MO
Reduced Gases by RSKSOP-175/EPA 3810	NA	2	40 mL	VOA Vials	HCl	APTIM
VFA by EPA 300m	NA	2	40 mL	VOA Vials	None	APTIM

Comments/Descriptions.

Phase 3 recirc, Sample event #2.
Note new lab for some analyses

Logged By/Date: [signature] 8/16/18

Reviewed By/Date: _____

APTIM

Sample Collection Log

500433 KAFB Rapid Response ESTCP – Groundwater, Phase III, Recirculation

Location Code KAFB-106MW2I

RFA/COC Number 500433EDBPT-GW037

Sample Number 106MW2I-P3R-082118

Collection Date 8/21/18

Sampling Method low flow

Collection Time 0952

Sample Type grab

Start Depth 513

QC Code normal

End Depth 523

Sampling Equipment bladder pump

Sample Matrix GW

QC Partners none

Sample Team TK

Containers:

Analytical Suite	Filtered	Qty	Size	Container Type	Preservative	Lab
EDB by 8011	NA	3	40 mL	VOA Vials	HCl	Test America GA
VOCs by 8260	NA	3	40 mL	VOA Vials	HCl	Test America GA
Dissolved O-Phosphate by EPA 9056	Yes	1	250 mL	Poly Bottle	None	Test America CA
Dissolved Fe and Mn by 6010	Yes	1	250 mL	Poly Bottle	HNO3	Test America GA
Alkalinity by SM2320B	NA	1	250 mL	Poly Bottle	None	Test America GA
Anions (Chloride, Sulfate, Bromide, Nitrate-Nitrite) by EPA 9056	NA	1	125 mL	Poly Bottle	None	
Iodide by EPA 300	NA	1	100 mL	Poly Bottle	None	Test America MO
Reduced Gases by RSKSOP-175/EPA 3810	NA	2	40 mL	VOA Vials	HCl	APTIM
VFA by EPA 300m	NA	2	40 mL	VOA Vials	None	APTIM
QuantArray-Chlor	NA	1	1 L	Poly Bottle	None	Microbial Insights
~~EDB CSIA~~	~~NA~~	~~2~~	~~1 L~~	~~Amber Bottle~~	~~HCl~~	~~University of Oklahom~~

not collected at intermediate wells.

Comments/Descriptions.

Phase 3 recirc, 3rd passive event

Logged By/Date: [signature] 8/21/18

Reviewed By/Date: _____

APTIM

Sample Collection Log

500433 KAFB Rapid Response ESTCP – Groundwater, Phase III, Recirculation

Location Code KAFB-106MW2 S

RFA/COC Number S60433EDBPT-GW037

Sample Number 106MW2S-P3R-082118

Collection Date 8/21/18

Sampling Method low flow

Collection Time 1143

Sample Type grab

Start Depth 463

QC Code normal

End Depth 498

Sampling Equipment bladder pump

Sample Matrix GW

QC Partners none

Sample Team TK

Containers:

Analytical Suite	Filtered	Qty	Size	Container Type	Preservative	Lab
EDB by 8011	NA	3	40 mL	VOA Vials	HCl	Test America GA
VOCs by 8260	NA	3	40 mL	VOA Vials	HCl	Test America GA
Dissolved O-Phosphate by EPA 9056	Yes	1	250 mL	Poly Bottle	None	Test America CA
Dissolved Fe and Mn by 6010	Yes	1	250 mL	Poly Bottle	HNO3	Test America GA
Alkalinity by SM2320B	NA	1	250 mL	Poly Bottle	None	Test America GA
Anions (Chloride, Sulfate, Bromide, Nitrate-Nitrite) by EPA 9056	NA	1	125 mL	Poly Bottle	None	
Iodide by EPA 300	NA	1	100 mL	Poly Bottle	None	Test America MO
Reduced Gases by RSKSOP-175/EPA 3810	NA	2	40 mL	VOA Vials	HCl	APTIM
VFA by EPA 300m	NA	2	40 mL	VOA Vials	None	APTIM
QuantArray-Chlor	NA	1	1 L	Poly Bottle	None	Microbial Insights
EDB CSIA	NA	2	1 L	Amber Bottle	HCl	University of Oklahom

Comments/Descriptions:

Phase 3 recirc, Sample event #3

Logged By/Date: [signature] 8/21/18

Reviewed By/Date: _____

APTIM

Sample Collection Log

500433 KAFB Rapid Response ESTCP – Groundwater, Phase III, Recirculation

Location Code KAFB-106MW1-I

RFA/COC Number 500433EDBPT-GW0307

Sample Number 106MW1I-P3R-082118

Collection Date 8/21/18

Sampling Method LowFlow

Collection Time 0930

Sample Type Grab

Start Depth 513

QC Code Normal

End Depth 523

Sampling Equipment Bladder Pump

Sample Matrix GW

QC Partners 106MW1I-P3R-082118-FD

Sample Team CL

Containers:

Analytical Suite	Filtered	Qty	Size	Container Type	Preservative	Lab
EDB by 8011	NA	3	40 mL	VOA Vials	HCl	Test America GA
VOCs by 8260	NA	3	40 mL	VOA Vials	HCl	Test America GA
Dissolved O-Phosphate by EPA 9056	Yes	1	250 mL	Poly Bottle	None	Test America CA
Dissolved Fe and Mn by 6010	Yes	1	250 mL	Poly Bottle	HNO3	Test America GA
Alkalinity by SM2320B	NA	1	250 mL	Poly Bottle	None	Test America GA
Anions (Chloride, Sulfate, Bromide, Nitrate-Nitrite) by EPA 9056	NA	1	125 mL	Poly Bottle	None	
Iodide by EPA 300	NA	1	~~100~~ 250 mL	Poly Bottle	None	Test America MO
Reduced Gases by RSKSOP-175/EPA 3810	NA	2	40 mL	VOA Vials	HCl	APTIM
VFA by EPA 300m	NA	2	40 mL	VOA Vials	None	APTIM
OK ~~QuantArray-Chlor~~	~~NA~~	1	1 L	Poly Bottle	None	Microbial Insights
~~EDB CSIA~~	~~NA~~	~~2~~	~~1 L~~	~~Amber Bottle~~	~~HCl~~	~~University of Oklahom~~

Week 4 event

Comments/Descriptions. Cannot fit WL meter down 3" well w/ tubing bundle

DTW @ 106MW1-S = 474.80 ft btoc.

Logged By/Date: [signature] 8/21/18

Reviewed By/Date: _____

APTIM

Sample Collection Log

500433 KAFB Rapid Response ESTCP – Groundwater, Phase III, Recirculation

Location Code KAFB-106MW1-S

RFA/COC Number 500433EDBPT-GW037

Sample Number 106MW1S-P3R-082118

Collection Date 8/21/18

Sampling Method Low Flow

Collection Time 1130

Sample Type Grab

Start Depth 463

QC Code Normal

End Depth 498

Sampling Equipment Bladder Pump

Sample Matrix GW

QC Partners None

Sample Team CL

Containers:

Analytical Suite	Filtered	Qty	Size	Container Type	Preservative	Lab
EDB by 8011	NA	3	40 mL	VOA Vials	HCl	Test America GA
VOCs by 8260	NA	3	40 mL	VOA Vials	HCl	Test America GA
Dissolved O-Phosphate by EPA 9056	Yes	1	250 mL	Poly Bottle	None	Test America CA
Dissolved Fe and Mn by 6010	Yes	1	250 mL	Poly Bottle	HNO3	Test America GA
Alkalinity by SM2320B	NA	1	250 mL	Poly Bottle	None	Test America GA
Anions (Chloride, Sulfate, Bromide, Nitrate-Nitrite) by EPA 9056	NA	1	125 mL	Poly Bottle	None	
Iodide by EPA 300	NA	1	~~100~~ 250 mL	Poly Bottle	None	Test America MO
Reduced Gases by RSKSOP-175/EPA 3810	NA	2	40 mL	VOA Vials	HCl	APTIM
VFA by EPA 300m	NA	2	40 mL	VOA Vials	None	APTIM
QuantArray-Chlor	NA	1	1 L	Poly Bottle	None	Microbial Insights
EDB CSIA	NA	2	1 L	Amber Bottle	HCl	University of Oklahom

Comments/Descriptions. Week 4 event

DTWi = 474.80 ft btoc

Slight foul odor.

Logged By/Date: [signature] 8/21/18

Reviewed By/Date: _____

APTIM

Sample Collection Log

500433 KAFB Rapid Response ESTCP – Groundwater, Phase III, Recirculation

Location Code KAFB-106064

RFA/COC Number 500433EDBPT-GW03B

Sample Number 106064-PSR-082218

Collection Date 8/22/18

Sampling Method Low Flow

Collection Time 0935

Sample Type Grab

Start Depth 488

QC Code Normal

End Depth 508

Sampling Equipment Bladder Pump

Sample Matrix GW

QC Partners None

Sample Team CL

Containers:

Analytical Suite	Filtered	Qty	Size	Container Type	Preservative	Lab
EDB by 8011	NA	3	40 mL	VOA Vials	HCl	Test America GA
VOCs by 8260	NA	3	40 mL	VOA Vials	HCl	Test America GA
Dissolved O-Phosphate by EPA 9056	Yes	1	250 mL	Poly Bottle	None	Test America CA
Dissolved Fe and Mn by 6010	Yes	1	250 mL	Poly Bottle	HNO3	Test America GA
Alkalinity by SM2320B	NA	1	250 mL	Poly Bottle	None	Test America ~~GA~~ CA
Anions (Chloride, Sulfate, Bromide, Nitrate-Nitrite) by EPA 9056	NA	1	125 mL	Poly Bottle	None	
Iodide by EPA 300	NA	1	~~100~~ 250 mL	Poly Bottle	None	Test America MO
Reduced Gases by RSKSOP-175/EPA 3810	NA	2	40 mL	VOA Vials	HCl	APTIM
VFA by EPA 300m	NA	2	40 mL	VOA Vials	None	APTIM
QuantArray-Chlor	NA	1	1 L	Poly Bottle	None	Microbial Insights
EDB CSIA	NA	2	1 L	Amber Bottle	HCl	University of Oklahom

Comments/Descriptions: Week 4 event
DTW$_i$ = 478.15 ft bfoc
Slight fuel and fouling odor.

Logged By/Date: [signature] 8/22/18

Reviewed By/Date:

APTIM

Sample Collection Log

500433 KAFB Rapid Response ESTCP – Groundwater, Phase III, Recirculation

Location Code KAFB-106EX2

RFA/COC Number 500433EDBPT-GW038

Sample Number 106EX2-PBR-082218

Collection Date 8/22/18

Sampling Method conveyance pipe

Collection Time 1207

Sample Type grab

Start Depth 487

QC Code normal

End Depth 502

Sampling Equipment piping, port

Sample Matrix GW

QC Partners none

Sample Team TK, CL

Containers:

Analytical Suite	Filtered	Qty	Size	Container Type	Preservative	Lab
EDB by 8011	NA	3	40 mL	VOA Vials	HCl	Test America GA
VOCs by 8260	NA	3	40 mL	VOA Vials	HCl	Test America GA
Dissolved O-Phosphate by EPA 9056	Yes	1	250 mL	Poly Bottle	None	Test America CA
Dissolved Fe and Mn by 6010	Yes	1	250 mL	Poly Bottle	HNO3	Test America GA
Alkalinity by SM2320B	NA	1	250 mL	Poly Bottle	None	Test America GA
Anions (Chloride, Sulfate, Bromide, Nitrate-Nitrite) by EPA 9056	NA	1	125 mL	Poly Bottle	None	
Iodide by EPA 300	NA	1	100 mL	Poly Bottle	None	Test America MO
Reduced Gases by RSKSOP-175/EPA 3810	NA	2	40 mL	VOA Vials	HCl	APTIM
VFA by EPA 300m	NA	2	40 mL	VOA Vials	None	APTIM
QuantArray-Chlor	NA	1	1 L	Poly Bottle	None	Microbial Insights
EDB CSIA	NA	2	1 L	Amber Bottle	HCl	University of Oklahom

Comments/Descriptions.

Phase 3 recirc, 3rd sample event
Water has foul biological smell.

Logged By/Date: [signature] 8/22/18

Reviewed By/Date: _____

APTIM

Sample Collection Log

500433 KAFB Rapid Response ESTCP – Groundwater, Phase III, Recirculation

Location Code KAFB-106063

RFA/COC Number 500433EDBPT-GW038

Sample Number 106063-P3R-082218

Collection Date 8/22/18

Sampling Method low flow

Collection Time 1003

Sample Type grab

Start Depth 508

QC Code normal

End Depth 523

Sampling Equipment bladder pump

Sample Matrix GW

QC Partners none

Sample Team TK

Containers:

Analytical Suite	Filtered	Qty	Size	Container Type	Preservative	Lab
EDB by 8011	NA	3	40 mL	VOA Vials	HCl	Test America GA
VOCs by 8260	NA	3	40 mL	VOA Vials	HCl	Test America GA
Dissolved O-Phosphate by EPA 9056	Yes	1	250 mL	Poly Bottle	None	Test America CA
Dissolved Fe and Mn by 6010	Yes	1	250 mL	Poly Bottle	HNO3	Test America GA
Alkalinity by SM2320B	NA	1	250 mL	Poly Bottle	None	Test America GA
Anions (Chloride, Sulfate, Bromide, Nitrate-Nitrite) by EPA 9056	NA	1	125 mL	Poly Bottle	None	
Iodide by EPA 300	NA	1	100 mL	Poly Bottle	None	Test America MO
Reduced Gases by RSKSOP-175/EPA 3810	NA	2	40 mL	VOA Vials	HCl	APTIM
VFA by EPA 300m	NA	2	40 mL	VOA Vials	None	APTIM
QuantArray-Chlor	NA	1	1 L	Poly Bottle	None	Microbial Insights
EDB CSIA	NA	2	1 L	Amber Bottle	HCl	University of Oklahom

Comments/Descriptions.

Phase 3 recirc, 3rd sample event

Logged By/Date: [signature] 8/22/18

Reviewed By/Date: _____

APTIM

Sample Collection Log

500433 KAFB Rapid Response ESTCP – Groundwater, Phase III, Recirculation

Location Code KAFB-106EX1

RFA/COC Number 500433EDBPT-GW038

Sample Number 106EX1-P3R-082218

Collection Date 8/22/18

Sampling Method conveyance piping

Collection Time 1107

Sample Type grab

Start Depth 487

QC Code normal

End Depth 502

Sampling Equipment pipe, port

Sample Matrix GW

QC Partners none

Sample Team TK, CL

Containers:

Analytical Suite	Filtered	Qty	Size	Container Type	Preservative	Lab
EDB by 8011	NA	3	40 mL	VOA Vials	HCl	Test America GA
VOCs by 8260	NA	3	40 mL	VOA Vials	HCl	Test America GA
Dissolved O-Phosphate by EPA 9056	Yes	1	250 mL	Poly Bottle	None	Test America CA
Dissolved Fe and Mn by 6010	Yes	1	250 mL	Poly Bottle	HNO3	Test America GA
Alkalinity by SM2320B	NA	1	250 mL	Poly Bottle	None	Test America GA
Anions (Chloride, Sulfate, Bromide, Nitrate-Nitrite) by EPA 9056	NA	1	125 mL	Poly Bottle	None	
Iodide by EPA 300	NA	1	100 mL	Poly Bottle	None	Test America MO
Reduced Gases by RSKSOP-175/EPA 3810	NA	2	40 mL	VOA Vials	HCl	APTIM
VFA by EPA 300m	NA	2	40 mL	VOA Vials	None	APTIM
QuantArray-Chlor	NA	1	1 L	Poly Bottle	None	Microbial Insights
EDB CSIA	NA	2	1 L	Amber Bottle	HCl	University of Oklahom

Comments/Descriptions.

phase 3 recirc, 3rd sample event

Logged By/Date: [signature] 8/22/18

Reviewed By/Date:

APTIM

Sample Collection Log

500433 KAFB Rapid Response ESTCP – Groundwater, Phase III, Recirculation

Location Code KAFB-106MW2I

RFA/COC Number 500433EDBPT-GW039

Sample Number 106MW2I-PSR-082818

Collection Date 8/28/18

Sampling Method low flow

Collection Time 1145

Sample Type grab

Start Depth 513

QC Code normal

End Depth 523

Sampling Equipment bladder pump

Sample Matrix GW

QC Partners none

Sample Team TK

Containers:

Analytical Suite	Filtered	Qty	Size	Container Type	Preservative	Lab
EDB by 8011	NA	3	40 mL	VOA Vials	HCl	Test America GA
VOCs by 8260	NA	3	40 mL	VOA Vials	HCl	Test America GA
O-Phosphate by SM4500 PE	Yes	1	250 mL	Poly Bottle	None	Test America CA
Dissolved Fe and Mn by 6010	Yes	1	250 mL	Poly Bottle	HNO3	Test America GA
Alkalinity by SM2320B	NA	1	250 mL	Poly Bottle	None	Test America GA
Anions (Chloride, Sulfate, Bromide, Nitrate-Nitrite) by EPA 9056	NA	1	125 mL	Poly Bottle	None	
Iodide by EPA 300	NA	1	250 mL	Poly Bottle	None	Test America MO
Reduced Gases by RSKSOP-175/EPA 3810	NA	2	40 mL	VOA Vials	HCl	APTIM
VFA by EPA 300m	NA	2	40 mL	VOA Vials	None	APTIM

Comments/Descriptions:

Phase 3 recirc, 4th active sample event

Logged By/Date: [signature] 8/28/18

Reviewed By/Date: _____

APTIM

Sample Collection Log

500433 KAFB Rapid Response ESTCP – Groundwater, Phase III, Recirculation

Location Code KAFB-106MW25

RFA/COC Number 500433EDBPT-GW039

Sample Number 106MW25-PSR-082818

Collection Date 8/28/18

Sampling Method low flow

Collection Time 0946

Sample Type grab

Start Depth 463

QC Code normal

End Depth 488

Sampling Equipment bladder pump

Sample Matrix GW

QC Partners none

Sample Team TK

Containers:

Analytical Suite	Filtered	Qty	Size	Container Type	Preservative	Lab
EDB by 8011	NA	3	40 mL	VOA Vials	HCl	Test America GA
VOCs by 8260	NA	3	40 mL	VOA Vials	HCl	Test America GA
O-Phosphate by SM4500 PE	Yes	1	250 mL	Poly Bottle	None	Test America CA
Dissolved Fe and Mn by 6010	Yes	1	250 mL	Poly Bottle	HNO3	Test America GA
Alkalinity by SM2320B	NA	1	250 mL	Poly Bottle	None	Test America GA
Anions (Chloride, Sulfate, Bromide, Nitrate-Nitrite) by EPA 9056	NA	1	125 mL	Poly Bottle	None	
Iodide by EPA 300	NA	1	250 mL	Poly Bottle	None	Test America MO
Reduced Gases by RSKSOP-175/EPA 3810	NA	2	40 mL	VOA Vials	HCl	APTIM
VFA by EPA 300m	NA	2	40 mL	VOA Vials	None	APTIM

Comments/Descriptions.

Phase 3 recirc, 4th active sample event

Note: water has foul, biological odor.

Logged By/Date: [signature] 8/28/18

Reviewed By/Date: _____

APTIM

Sample Collection Log

500433 KAFB Rapid Response ESTCP – Groundwater, Phase III, Recirculation

Location Code KAFB-106MW1-S

RFA/COC Number 500433EDBPT-GW039

Sample Number 106MW1S-P3R-082818

Collection Date 8/28/18

Sampling Method Low Flow

Collection Time 1140

Sample Type Grab

Start Depth 463

QC Code Normal

End Depth 498

Sampling Equipment Bladder Pump

Sample Matrix GW

QC Partners None

Sample Team CC

Containers:

Analytical Suite	Filtered	Qty	Size	Container Type	Preservative	Lab
EDB by 8011	NA	3	40 mL	VOA Vials	HCl	Test America GA
VOCs by 8260	NA	3	40 mL	VOA Vials	HCl	Test America GA
O-Phosphate by SM4500 PE	Yes	1	250 mL	Poly Bottle	None	Test America CA
Dissolved Fe and Mn by 6010	Yes	1	250 mL	Poly Bottle	HNO3	Test America GA
Alkalinity by SM2320B	NA	1	250 mL	Poly Bottle	None	Test America GA
Anions (Chloride, Sulfate, Bromide, Nitrate-Nitrite) by EPA 9056	NA	1	125 mL	Poly Bottle	None	
Iodide by EPA 300	NA	1	250 mL	Poly Bottle	None	Test America MO
Reduced Gases by RSKSOP-175/EPA 3810	NA	2	40 mL	VOA Vials	HCl	APTIM
VFA by EPA 300m	NA	2	40 mL	VOA Vials	None	APTIM

Comments/Descriptions: Week 5 DTWi = 474.66 ft btoc. Slight fuel and fouling odor.

Logged By/Date: 8/28/18

Reviewed By/Date:

APTIM

Sample Collection Log

500433 KAFB Rapid Response ESTCP – Groundwater, Phase III, Recirculation

Location Code KAFB-106MW1-I

RFA/COC Number 500433EDBPT-GW039

Sample Number 106MW1I-P3R-082818

Collection Date 8/28/18

Sampling Method Low Flow

Collection Time 0925

Sample Type Grab

Start Depth 513

QC Code Normal

End Depth 523

Sampling Equipment Bladder Pump

Sample Matrix GW

QC Partners None

Sample Team CL

Containers:

Analytical Suite	Filtered	Qty	Size	Container Type	Preservative	Lab
EDB by 8011	NA	3	40 mL	VOA Vials	HCl	Test America GA
VOCs by 8260	NA	3	40 mL	VOA Vials	HCl	Test America GA
O-Phosphate by SM4500 PE	Yes	1	250 mL	Poly Bottle	None	Test America CA
Dissolved Fe and Mn by 6010	Yes	1	250 mL	Poly Bottle	HNO3	Test America GA
Alkalinity by SM2320B	NA	1	250 mL	Poly Bottle	None	Test America GA
Anions (Chloride, Sulfate, Bromide, Nitrate-Nitrite) by EPA 9056	NA	1	~~250~~ OK ~~125~~ mL	Poly Bottle	None	
Iodide by EPA 300	NA	1	250 mL	Poly Bottle	None	Test America MO
Reduced Gases by RSKSOP-175/EPA 3810	NA	2	40 mL	VOA Vials	HCl	APTIM
VFA by EPA 300m	NA	2	40 mL	VOA Vials	None	APTIM

Week 5

Comments/Descriptions: DTW = 474.66 ft btoc, as measured @ 106MW1-S.
WL meter cannot fit down 3" well w/ tubing bundle.
Slight fuel odor.

Logged By/Date: 8/28/18

Reviewed By/Date:

APTIM

Sample Collection Log

500433 KAFB Rapid Response ESTCP – Groundwater, Phase III, Recirculation

Location Code KAFB-106064

RFA/COC Number 500433EDBPT-GW040

Sample Number 106064-P3R-082918

Collection Date 8/29/18

Sampling Method Low Flow

Collection Time 0925

Sample Type Grab

Start Depth 488

QC Code Normal

End Depth 503

Sampling Equipment Bladder Pumps

Sample Matrix GW

QC Partners None

Sample Team CL

Containers:

Analytical Suite	Filtered	Qty	Size	Container Type	Preservative	Lab
EDB by 8011	NA	3	40 mL	VOA Vials	HCl	Test America GA
VOCs by 8260	NA	3	40 mL	VOA Vials	HCl	Test America GA
O-Phosphate by SM4500 PE	Yes	1	250 mL	Poly Bottle	None	Test America CA
Dissolved Fe and Mn by 6010	Yes	1	250 mL	Poly Bottle	HNO3	Test America GA
Alkalinity by SM2320B	NA	1	250 mL	Poly Bottle	None	Test America GA
Anions (Chloride, Sulfate, Bromide, Nitrate-Nitrite) by EPA 9056	NA	1	125 mL	Poly Bottle	None	
Iodide by EPA 300	NA	1	250 mL	Poly Bottle	None	Test America MO
Reduced Gases by RSKSOP-175/EPA 3810	NA	2	40 mL	VOA Vials	HCl	APTIM
VFA by EPA 300m	NA	2	40 mL	VOA Vials	None	APTIM

Comments/Descriptions: DTWi = 478.15 ftbtoc. Water smells foulty.

Logged By/Date: 8/29/18

Reviewed By/Date:

APTIM

Sample Collection Log

500433 KAFB Rapid Response ESTCP – Groundwater, Phase III, Recirculation

Location Code KAFB-106EX2

RFA/COC Number 500433EDBPT-GW040

Sample Number 106EX2-PSR-082918

Collection Date 8/29/18

Sampling Method Conveyance piping

Collection Time 1218

Sample Type grab

Start Depth 487

QC Code normal

End Depth 502

Sampling Equipment piping sample port

Sample Matrix GW

QC Partners none

Sample Team TK, CL

Containers:

Analytical Suite	Filtered	Qty	Size	Container Type	Preservative	Lab
EDB by 8011	NA	3	40 mL	VOA Vials	HCl	Test America GA
VOCs by 8260	NA	3	40 mL	VOA Vials	HCl	Test America GA
O-Phosphate by SM4500 PE	Yes	1	250 mL	Poly Bottle	None	Test America CA
Dissolved Fe and Mn by 6010	Yes	1	250 mL	Poly Bottle	HNO3	Test America GA
Alkalinity by SM2320B	NA	1	250 mL	Poly Bottle	None	Test America GA
Anions (Chloride, Sulfate, Bromide, Nitrate-Nitrite) by EPA 9056	NA	1	125 mL	Poly Bottle	None	
Iodide by EPA 300	NA	1	250 mL	Poly Bottle	None	Test America MO
Reduced Gases by RSKSOP-175/EPA 3810	NA	2	40 mL	VOA Vials	HCl	APTIM
VFA by EPA 300m	NA	2	40 mL	VOA Vials	None	APTIM

Comments/Descriptions:

Phase 3 recirc 4th sample event.
Water has quite foul biological odor.

Logged By/Date: [illegible] 8/29/18

Reviewed By/Date: _____

APTIM

Sample Collection Log

500433 KAFB Rapid Response ESTCP – Groundwater, Phase III, Recirculation

Location Code KAFB-106063

RFA/COC Number 500433EDBPT-GW040

Sample Number 106063-P3R-082918

Collection Date 8/29/18

Sampling Method low flow

Collection Time 0958

Sample Type grab

Start Depth 508

QC Code FD

End Depth 523

Sampling Equipment bladderpump

Sample Matrix GW

QC Partners 106063-P3R-082918-FD

Sample Team TK

Containers:

Analytical Suite	Filtered	Qty	Size	Container Type	Preservative	Lab
EDB by 8011	NA	3	40 mL	VOA Vials	HCl	Test America GA
VOCs by 8260	NA	3	40 mL	VOA Vials	HCl	Test America GA
O-Phosphate by SM4500 PE	Yes	1	250 mL	Poly Bottle	None	Test America CA
Dissolved Fe and Mn by 6010	Yes	1	250 mL	Poly Bottle	HNO3	Test America GA
Alkalinity by SM2320B	NA	1	250 mL	Poly Bottle	None	Test America GA
Anions (Chloride, Sulfate, Bromide, Nitrate-Nitrite) by EPA 9056	NA	1	125 mL	Poly Bottle	None	
Iodide by EPA 300	NA	1	250 mL	Poly Bottle	None	Test America MO
Reduced Gases by RSKSOP-175/EPA 3810	NA	2	40 mL	VOA Vials	HCl	APTIM
VFA by EPA 300m	NA	2	40 mL	VOA Vials	None	APTIM

Comments/Descriptions.

Phase 3 recirc, active sample event #4

Logged By/Date: [signature] 8/29/18

Reviewed By/Date: _____

APTIM

Sample Collection Log

500433 KAFB Rapid Response ESTCP – Groundwater, Phase III, Recirculation

Location Code KAFB-106EX1

RFA/COC Number 500433EDBPT-GW040

Sample Number 106EX1-PSR-082918

Collection Date 8/29/18

Sampling Method conveyance pipe

Collection Time 1117

Sample Type grab

Start Depth 487

QC Code normal

End Depth 502

Sampling Equipment piping, sample port

Sample Matrix GW

QC Partners none

Sample Team TK, CL

Containers:

Analytical Suite	Filtered	Qty	Size	Container Type	Preservative	Lab
EDB by 8011	NA	3	40 mL	VOA Vials	HCl	Test America GA
VOCs by 8260	NA	3	40 mL	VOA Vials	HCl	Test America GA
O-Phosphate by SM4500 PE	Yes	1	250 mL	Poly Bottle	None	Test America CA
Dissolved Fe and Mn by 6010	Yes	1	250 mL	Poly Bottle	HNO3	Test America GA
Alkalinity by SM2320B	NA	1	250 mL	Poly Bottle	None	Test America GA
Anions (Chloride, Sulfate, Bromide, Nitrate-Nitrite) by EPA 9056	NA	1	125 mL	Poly Bottle	None	
Iodide by EPA 300	NA	1	250 mL	Poly Bottle	None	Test America MO
Reduced Gases by RSKSOP-175/EPA 3810	NA	2	40 mL	VOA Vials	HCl	APTIM
VFA by EPA 300m	NA	2	40 mL	VOA Vials	None	APTIM

Comments/Descriptions:

Phase 3 recirc 4th sample event.
Water has v. strong foul odor

Logged By/Date: [signature] 8/29/18

Reviewed By/Date: _____

APTIM

Sample Collection Log

500433 KAFB Rapid Response ESTCP – Groundwater, Phase III, Passive

Location Code KAFB-106MW1-I

RFA/COC Number 500433EDBPT-GW041

Sample Number 106MW1I-P3P-091118

Collection Date 9/11/18

Sampling Method Low Flow

Collection Time 0935

Sample Type Grab

Start Depth 513

QC Code Normal

End Depth 523

Sampling Equipment Bladder Pump

Sample Matrix GW

QC Partners None

Sample Team CL

Containers:

Analytical Suite	Filtered	Qty	Size	Container Type	Preservative	Lab
EDB by 8011	NA	3	40 mL	VOA Vials	HCl	Test America GA
VOCs by 8260	NA	3	40 mL	VOA Vials	HCl	Test America GA
O-Phosphate by SM4500 PE	Yes	1	250 mL	Poly Bottle	None	Test America CA
Dissolved Fe and Mn by 6010	Yes	1	250 mL	Poly Bottle	HNO3	Test America GA
Alkalinity by SM2320B	NA	1	250 mL	Poly Bottle	None	Test America CA
Anions (Chloride, Sulfate, Bromide, Nitrate-Nitrite) by EPA 9056	NA	1	125 mL	Poly Bottle	None	Test America GA
Iodide by EPA 300	NA	1	250 mL	Poly Bottle	None	Test America MO
Reduced Gases by RSKSOP-175/EPA 3810	NA	2	40 mL	VOA Vials	HCl	APTIM
VFA by EPA 300m	NA	2	40 mL	VOA Vials	None	APTIM
EDB CSIA	NA	2	1 L	Amber Bottle	HCl	University of Oklahom

Comments/Descriptions: Month 1 event
DTW=474.75 ft btoc, as measured at 106MW1-S.
Water has slight fuel odor.

Logged By/Date: [signature] 9/11/18

Reviewed By/Date: _____

APTIM

Sample Collection Log

500433 KAFB Rapid Response ESTCP – Groundwater, Phase III, Passive

Location Code KAFB-106MW1-S

RFA/COC Number 500433EDBPT-GW041

Sample Number 106MW1S-P3R-091118

Collection Date 9/11/18

Sampling Method Low Flow

Collection Time 1135

Sample Type Grab

Start Depth 463

QC Code Normal

End Depth 498

Sampling Equipment Bladder Pump

Sample Matrix GW

QC Partners None

Sample Team CL

Containers:

Analytical Suite	Filtered	Qty	Size	Container Type	Preservative	Lab
EDB by 8011	NA	3	40 mL	VOA Vials	HCl	Test America GA
VOCs by 8260	NA	3	40 mL	VOA Vials	HCl	Test America GA
O-Phosphate by SM4500 PE	Yes	1	250 mL	Poly Bottle	None	Test America CA
Dissolved Fe and Mn by 6010	Yes	1	250 mL	Poly Bottle	HNO3	Test America GA
Alkalinity by SM2320B	NA	1	250 mL	Poly Bottle	None	Test America CA
Anions (Chloride, Sulfate, Bromide, Nitrate-Nitrite) by EPA 9056	NA	1	125 mL	Poly Bottle	None	Test America GA
Iodide by EPA 300	NA	1	250 mL	Poly Bottle	None	Test America MO
Reduced Gases by RSKSOP-175/EPA 3810	NA	2	40 mL	VOA Vials	HCl	APTIM
VFA by EPA 300m	NA	2	40 mL	VOA Vials	None	APTIM
EDB CSIA	NA	2	1 L	Amber Bottle	HCl	University of Oklahom

Comments/Descriptions: Month 1 Event
DTWi = 474.75 ft btoc.
Water smells slightly foul.

Logged By/Date: [signature] 9/11/18

Reviewed By/Date: _____

APTIM

Sample Collection Log

500433 KAFB Rapid Response ESTCP – Groundwater, Phase III, Passive

Location Code KAFB-106MW2I

RFA/COC Number 500433EDBPT-GW041

Sample Number 106MW2I-PSP-091118

Collection Date 9/11/18

Sampling Method low flow

Collection Time 1017

Sample Type grab

Start Depth 513

QC Code normal

End Depth 523

Sampling Equipment bladder pump

Sample Matrix GW

QC Partners none

Sample Team TK

Containers:

Analytical Suite	Filtered	Qty	Size	Container Type	Preservative	Lab
EDB by 8011	NA	3	40 mL	VOA Vials	HCl	Test America GA
VOCs by 8260	NA	3	40 mL	VOA Vials	HCl	Test America GA
O-Phosphate by SM4500 PE	Yes	1	250 mL	Poly Bottle	None	Test America CA
Dissolved Fe and Mn by 6010	Yes	1	250 mL	Poly Bottle	HNO3	Test America GA
Alkalinity by SM2320B	NA	1	250 mL	Poly Bottle	None	Test America CA
Anions (Chloride, Sulfate, Bromide, Nitrate-Nitrite) by EPA 9056	NA	1	125 mL	Poly Bottle	None	Test America GA
Iodide by EPA 300	NA	1	250 mL	Poly Bottle	None	Test America MO
Reduced Gases by RSKSOP-175/EPA 3810	NA	2	40 mL	VOA Vials	HCl	APTIM
VFA by EPA 300m	NA	2	40 mL	VOA Vials	None	APTIM
EDB CSIA	NA	2	1 L	Amber Bottle	HCl	University of Oklahom

Comments/Descriptions.

phase 3 recirc ended on 9/9. First event phase 3 passive

Logged By/Date: [signature] 9/11/18 ***Reviewed By/Date:*** _____

APTIM

Sample Collection Log

500433 KAFB Rapid Response ESTCP – Groundwater, Phase III, Passive

Location Code KAFB-106MW25

RFA/COC Number 500433EDBPT-GW041

Sample Number 106MW25-PSP-091118

Collection Date 9/11/18

Sampling Method low flow

Collection Time 1202

Sample Type grab

Start Depth 463

QC Code normal

End Depth 498

Sampling Equipment bladder pump

Sample Matrix GW

QC Partners none

Sample Team TK

Containers:

Analytical Suite	Filtered	Qty	Size	Container Type	Preservative	Lab
EDB by 8011	NA	3	40 mL	VOA Vials	HCl	Test America GA
VOCs by 8260	NA	3	40 mL	VOA Vials	HCl	Test America GA
O-Phosphate by SM4500 PE	Yes	1	250 mL	Poly Bottle	None	Test America CA
Dissolved Fe and Mn by 6010	Yes	1	250 mL	Poly Bottle	HNO3	Test America GA
Alkalinity by SM2320B	NA	1	250 mL	Poly Bottle	None	Test America CA
Anions (Chloride, Sulfate, Bromide, Nitrate-Nitrite) by EPA 9056	NA	1	125 mL	Poly Bottle	None	Test America GA
Iodide by EPA 300	NA	1	250 mL	Poly Bottle	None	Test America MO
Reduced Gases by RSKSOP-175/EPA 3810	NA	2	40 mL	VOA Vials	HCl	APTIM
VFA by EPA 300m	NA	2	40 mL	VOA Vials	None	APTIM
EDB CSIA	NA	2	1 L	Amber Bottle	HCl	University of Oklahom

Comments/Descriptions.

Phase recirc ended on 9/9.
1st passive event for phase 3.

Logged By/Date: 9/11/18

Reviewed By/Date:

APTIM

Sample Collection Log

500433 KAFB Rapid Response ESTCP – Groundwater, Phase III, Passive

Location Code KAFB-106064

RFA/COC Number 500433EDBPT-GW042

Sample Number 106064-P3P-091218

Collection Date 9/12/18

Sampling Method Low Flow

Collection Time 0905

Sample Type Grab

Start Depth 488

QC Code Normal

End Depth 508

Sampling Equipment Bladder Pump

Sample Matrix GW

QC Partners 106064-P3P-091218-FD

Sample Team CC

Containers:

Analytical Suite	Filtered	Qty	Size	Container Type	Preservative	Lab
EDB by 8011	NA	3	40 mL	VOA Vials	HCl	Test America GA
VOCs by 8260	NA	3	40 mL	VOA Vials	HCl	Test America GA
O-Phosphate by SM4500 PE	Yes	1	250 mL	Poly Bottle	None	Test America CA
Dissolved Fe and Mn by 6010	Yes	1	250 mL	Poly Bottle	HNO3	Test America GA
Alkalinity by SM2320B	NA	1	250 mL	Poly Bottle	None	Test America CA
Anions (Chloride, Sulfate, Bromide, Nitrate-Nitrite) by EPA 9056	NA	1	125 mL	Poly Bottle	None	Test America GA
Iodide by EPA 300	NA	1	250 mL	Poly Bottle	None	Test America MO
Reduced Gases by RSKSOP-175/EPA 3810	NA	2	40 mL	VOA Vials	HCl	APTIM
VFA by EPA 300m	NA	2	40 mL	VOA Vials	None	APTIM
EDB CSIA	NA	2	1 L	Amber Bottle	HCl	University of Oklahom

Comments/Descriptions: DTWi = 478.20 ft btoc.

Water smells slightly fouly.

Logged By/Date CJ Faller 9/12/18

Reviewed By/Date:

APTIM

Sample Collection Log

500433 KAFB Rapid Response ESTCP – Groundwater, Phase III, Passive

Location Code KAFB-106EX2

RFA/COC Number 500433EDBPT-GW042

Sample Number 106EX2-P3P-091218

Collection Date 9/12/18

Sampling Method Conveyance pipe

Collection Time 1356

Sample Type grab

Start Depth 487

QC Code Normal

End Depth 502

Sampling Equipment pipe, sample port

Sample Matrix GW

QC Partners none

Sample Team TK, CL

Containers:

Analytical Suite	Filtered	Qty	Size	Container Type	Preservative	Lab
EDB by 8011	NA	3	40 mL	VOA Vials	HCl	Test America GA
VOCs by 8260	NA	3	40 mL	VOA Vials	HCl	Test America GA
O-Phosphate by SM4500 PE	Yes	1	250 mL	Poly Bottle	None	Test America CA
Dissolved Fe and Mn by 6010	Yes	1	250 mL	Poly Bottle	HNO3	Test America GA
Alkalinity by SM2320B	NA	1	250 mL	Poly Bottle	None	Test America CA
Anions (Chloride, Sulfate, Bromide, Nitrate-Nitrite) by EPA 9056	NA	1	125 mL	Poly Bottle	None	Test America GA
Iodide by EPA 300	NA	1	250 mL	Poly Bottle	None	Test America MO
Reduced Gases by RSKSOP-175/EPA 3810	NA	2	40 mL	VOA Vials	HCl	APTIM
VFA by EPA 300m	NA	2	40 mL	VOA Vials	None	APTIM
EDB CSIA	NA	2	1 L	Amber Bottle	HCl	University of Oklahom

Comments/Descriptions.

Phase 3 passive, 1st sample event

Very foul biological odor

Logged By/Date: [signature] 9/12/18

Reviewed By/Date: _____

APTIM

Sample Collection Log

500433 KAFB Rapid Response ESTCP – Groundwater, Phase III, Passive

Location Code KAFB-106063

RFA/COC Number 500433EDBPT-GW042

Sample Number 106063-P3P-091218

Collection Date 9/12/18

Sampling Method low flow

Collection Time 0936

Sample Type grab

Start Depth 508

QC Code normal

End Depth 523

Sampling Equipment bladder pump

Sample Matrix GW

QC Partners none

Sample Team TK

Containers:

Analytical Suite	Filtered	Qty	Size	Container Type	Preservative	Lab
EDB by 8011	NA	3	40 mL	VOA Vials	HCl	Test America GA
VOCs by 8260	NA	3	40 mL	VOA Vials	HCl	Test America GA
O-Phosphate by SM4500 PE	Yes	1	250 mL	Poly Bottle	None	Test America CA
Dissolved Fe and Mn by 6010	Yes	1	250 mL	Poly Bottle	HNO3	Test America GA
Alkalinity by SM2320B	NA	1	250 mL	Poly Bottle	None	Test America CA
Anions (Chloride, Sulfate, Bromide, Nitrate-Nitrite) by EPA 9056	NA	1	125 mL	Poly Bottle	None	Test America GA
Iodide by EPA 300	NA	1	250 mL	Poly Bottle	None	Test America MO
Reduced Gases by RSKSOP-175/EPA 3810	NA	2	40 mL	VOA Vials	HCl	APTIM
VFA by EPA 300m	NA	2	40 mL	VOA Vials	None	APTIM
EDB CSIA	NA	2	1 L	Amber Bottle	HCl	University of Oklahom

Comments/Descriptions: Phase 3 passive, sample event #1

Logged By/Date: [signature] 9/12/18

Reviewed By/Date: _____

APTIM

Sample Collection Log

500433 KAFB Rapid Response ESTCP – Groundwater, Phase III, Passive

Location Code KAFB-106EX1

RFA/COC Number 500433EDBPT-GW042

Sample Number 106EX1-P3P-091218

Collection Date 9/12/18

Sampling Method Conveyance pipe

Collection Time 1257

Sample Type grab

Start Depth 487

QC Code normal

End Depth 502

Sampling Equipment pipe, sample port

Sample Matrix GW

QC Partners none

Sample Team TK, CC

Containers:

Analytical Suite	Filtered	Qty	Size	Container Type	Preservative	Lab
EDB by 8011	NA	3	40 mL	VOA Vials	HCl	Test America GA
VOCs by 8260	NA	3	40 mL	VOA Vials	HCl	Test America GA
O-Phosphate by SM4500 PE	Yes	1	250 mL	Poly Bottle	None	Test America CA
Dissolved Fe and Mn by 6010	Yes	1	250 mL	Poly Bottle	HNO3	Test America GA
Alkalinity by SM2320B	NA	1	250 mL	Poly Bottle	None	Test America CA
Anions (Chloride, Sulfate, Bromide, Nitrate-Nitrite) by EPA 9056	NA	1	125 mL	Poly Bottle	None	Test America GA
Iodide by EPA 300	NA	1	250 mL	Poly Bottle	None	Test America MO
Reduced Gases by RSKSOP-175/EPA 3810	NA	2	40 mL	VOA Vials	HCl	APTIM
VFA by EPA 300m	NA	2	40 mL	VOA Vials	None	APTIM
EDB CSIA	NA	2	1 L	Amber Bottle	HCl	University of Oklahom

Comments/Descriptions.

Phase 3 ~~recire~~ TSK passive, first sample event

Logged By/Date: [signature] 9/12/18

Reviewed By/Date: _____

APTIM

Sample Collection Log

500433 KAFB Rapid Response ESTCP – Groundwater, Phase III, Passive

Location Code KAFB-106MW2-I

RFA/COC Number 500433EDBPT-GW043

Sample Number 106MW2I-P3P-100218

Collection Date 10/2/18

Sampling Method Low Flow

Collection Time 0905

Sample Type Grab

Start Depth 513

QC Code Normal

End Depth 523

Sampling Equipment Bladder Pump

Sample Matrix GW

QC Partners None

Sample Team CL

Containers:

Analytical Suite	Filtered	Qty	Size	Container Type	Preservative	Lab
EDB by 8011	NA	3	40 mL	VOA Vials	HCl	Test America GA
VOCs by 8260	NA	3	40 mL	VOA Vials	HCl	Test America GA
O-Phosphate by SM4500 PE	Yes	1	250 mL	Poly Bottle	None	Test America CA
Dissolved Fe and Mn by 6010	Yes	1	250 mL	Poly Bottle	HNO3	Test America GA
Alkalinity by SM2320B	NA	1	250 mL	Poly Bottle	None	Test America CA
Anions (Chloride, Sulfate, Bromide, Nitrate-Nitrite) by EPA 9056	NA	1	125 mL	Poly Bottle	None	Test America GA
Iodide by EPA 300	NA	1	250 mL	Poly Bottle	None	Test America MO
Reduced Gases by RSKSOP-175/EPA 3810	NA	2	40 mL	VOA Vials	HCl	APTIM
VFA by EPA 300m	NA	2	40 mL	VOA Vials	None	APTIM

Comments/Descriptions: Second Passive event.
Cannot measure DTW @ 3" wells. Slight fuel odor.

Logged By/Date: CJ Falle 10/2/18

Reviewed By/Date: _____

APTIM

Sample Collection Log

500433 KAFB Rapid Response ESTCP – Groundwater, Phase III, Passive

Location Code KAFB-106MW2-S

RFA/COC Number 500433EDBPT-GW043

Sample Number 106MW2S-P3P-100218

Collection Date 10/2/18

Sampling Method Low Flow

Collection Time 1045

Sample Type Grab

Start Depth 463

QC Code Normal

End Depth 498

Sampling Equipment Bladder Pump

Sample Matrix GW

QC Partners None

Sample Team CL

Containers:

Analytical Suite	Filtered	Qty	Size	Container Type	Preservative	Lab
EDB by 8011	NA	3	40 mL	VOA Vials	HCl	Test America GA
VOCs by 8260	NA	3	40 mL	VOA Vials	HCl	Test America GA
O-Phosphate by SM4500 PE	Yes	1	250 mL	Poly Bottle	None	Test America CA
Dissolved Fe and Mn by 6010	Yes	1	250 mL	Poly Bottle	HNO3	Test America GA
Alkalinity by SM2320B	NA	1	250 mL	Poly Bottle	None	Test America CA
Anions (Chloride, Sulfate, Bromide, Nitrate-Nitrite) by EPA 9056	NA	1	125 mL	Poly Bottle	None	Test America GA
Iodide by EPA 300	NA	1	250 mL	Poly Bottle	None	Test America MO
Reduced Gases by RSKSOP-175/EPA 3810	NA	2	40 mL	VOA Vials	HCl	APTIM
VFA by EPA 300m	NA	2	40 mL	VOA Vials	None	APTIM

Comments/Descriptions: Second Passive event. Cannot fit WL meter downhole w/ tubing bundle. Water has fuel odor and is slightly yellow in color.

Logged By/Date: [signature] 10/2/18

Reviewed By/Date: _____

APTIM

Sample Collection Log

500433 KAFB Rapid Response ESTCP – Groundwater, Phase III, Passive

Location Code KAFB-106MW1-S

RFA/COC Number 500433EDBPT-GW044

Sample Number 106MW1S-P3P-100318

Collection Date 10/3/18

Sampling Method Low Flow

Collection Time 1025

Sample Type Grab

Start Depth 463

QC Code Normal

End Depth 498

Sampling Equipment Bladder Pump

Sample Matrix GW

QC Partners 106MW1S-P3P-100318-FD

Sample Team CL

Containers:

Analytical Suite	Filtered	Qty	Size	Container Type	Preservative	Lab
EDB by 8011	NA	3	40 mL	VOA Vials	HCl	Test America GA
VOCs by 8260	NA	3	40 mL	VOA Vials	HCl	Test America GA
O-Phosphate by SM4500 PE	Yes	1	250 mL	Poly Bottle	None	Test America CA
Dissolved Fe and Mn by 6010	Yes	1	250 mL	Poly Bottle	HNO3	Test America GA
Alkalinity by SM2320B	NA	1	250 mL	Poly Bottle	None	Test America CA
Anions (Chloride, Sulfate, Bromide, Nitrate-Nitrite) by EPA 9056	NA	1	125 mL	Poly Bottle	None	Test America GA
Iodide by EPA 300	NA	1	250 mL	Poly Bottle	None	Test America MO
Reduced Gases by RSKSOP-175/EPA 3810	NA	2	40 mL	VOA Vials	HCl	APTIM
VFA by EPA 300m	NA	2	40 mL	VOA Vials	None	APTIM

Second passive event

Comments/Descriptions: DTWi = 474.78 ft btoc. Slight fuel odor.

Logged By/Date: [signature] 10/3/18

Reviewed By/Date: _____

APTIM

Sample Collection Log

500433 KAFB Rapid Response ESTCP – Groundwater, Phase III, Passive

Location Code KAFB-106MW1-I

RFA/COC Number 500433EDB PT-GW044

Sample Number 106MW1I-P3P-100818

Collection Date 10/8/18

Sampling Method Low Flow

Collection Time 0900

Sample Type Grab

Start Depth 513

QC Code Normal

End Depth 523

Sampling Equipment Bladder Pump

Sample Matrix GW

QC Partners None

Sample Team CL

Containers:

Analytical Suite	Filtered	Qty	Size	Container Type	Preservative	Lab
EDB by 8011	NA	3	40 mL	VOA Vials	HCl	Test America GA
VOCs by 8260	NA	3	40 mL	VOA Vials	HCl	Test America GA
O-Phosphate by SM4500 PE	Yes	1	250 mL	Poly Bottle	None	Test America CA
Dissolved Fe and Mn by 6010	Yes	1	250 mL	Poly Bottle	HNO3	Test America GA
Alkalinity by SM2320B	NA	1	250 mL	Poly Bottle	None	Test America CA
Anions (Chloride, Sulfate, Bromide, Nitrate-Nitrite) by EPA 9056	NA	1	125 mL	Poly Bottle	None	Test America GA
Iodide by EPA 300	NA	1	250 mL	Poly Bottle	None	Test America MO
Reduced Gases by RSKSOP-175/EPA 3810	NA	2	40 mL	VOA Vials	HCl	APTIM
VFA by EPA 300m	NA	2	40 mL	VOA Vials	None	APTIM

Comments/Descriptions: Second passive event. Cannot measure DTW in 3" wells. Water has slight fuel odor.

Logged By/Date: 10/8/18

Reviewed By/Date:

APTIM

Sample Collection Log

500433 KAFB Rapid Response ESTCP – Groundwater, Phase III, Passive

Location Code KAFB-106EX2

RFA/COC Number 500433EDBPT-GW045

Sample Number 106EX2-P3P-100418

Collection Date 10/4/18

Sampling Method Sample port

Collection Time 1530

Sample Type Grab

Start Depth 487

QC Code Normal

End Depth 502

Sampling Equipment Sample port

Sample Matrix GW

QC Partners None

Sample Team CL

Containers:

Analytical Suite	Filtered	Qty	Size	Container Type	Preservative	Lab
EDB by 8011	NA	3	40 mL	VOA Vials	HCl	Test America GA
VOCs by 8260	NA	3	40 mL	VOA Vials	HCl	Test America GA
O-Phosphate by SM4500 PE	Yes	1	250 mL	Poly Bottle	None	Test America CA
Dissolved Fe and Mn by 6010	Yes	1	250 mL	Poly Bottle	HNO3	Test America GA
Alkalinity by SM2320B	NA	1	250 mL	Poly Bottle	None	Test America CA
Anions (Chloride, Sulfate, Bromide, Nitrate-Nitrite) by EPA 9056	NA	1	125 mL	Poly Bottle	None	Test America GA
Iodide by EPA 300	NA	1	250 mL	Poly Bottle	None	Test America MO
Reduced Gases by RSKSOP-175/EPA 3810	NA	2	40 mL	VOA Vials	HCl	APTIM
VFA by EPA 300m	NA	2	40 mL	VOA Vials	None	APTIM

Comments/Descriptions: Event 2
DTW$_i$ = 474.98 ftbtoc. Water smells foulg

Logged By/Date: 10/4/18

Reviewed By/Date:

APTIM

Sample Collection Log

500433 KAFB Rapid Response ESTCP – Groundwater, Phase III, Passive

Location Code KAFB-106064

RFA/COC Number 500433EDBPT-GW045

Sample Number 106064-P3P-100418

Collection Date 10/4/18

Sampling Method Low Flow

Collection Time 0925

Sample Type Grab

Start Depth 488

QC Code Normal

End Depth 508

Sampling Equipment Bladder Pump

Sample Matrix GW

QC Partners None

Sample Team CL

Containers:

Analytical Suite	Filtered	Qty	Size	Container Type	Preservative	Lab
EDB by 8011	NA	3	40 mL	VOA Vials	HCl	Test America GA
VOCs by 8260	NA	3	40 mL	VOA Vials	HCl	Test America GA
O-Phosphate by SM4500 PE	Yes	1	250 mL	Poly Bottle	None	Test America CA
Dissolved Fe and Mn by 6010	Yes	1	250 mL	Poly Bottle	HNO3	Test America GA
Alkalinity by SM2320B	NA	1	250 mL	Poly Bottle	None	Test America CA
Anions (Chloride, Sulfate, Bromide, Nitrate-Nitrite) by EPA 9056	NA	1	125 mL	Poly Bottle	None	Test America GA
Iodide by EPA 300	NA	1	250 mL	Poly Bottle	None	Test America MO
Reduced Gases by RSKSOP-175/EPA 3810	NA	2	40 mL	VOA Vials	HCl	APTIM
VFA by EPA 300m	NA	2	40 mL	VOA Vials	None	APTIM

Event 2

Comments/Descriptions: DTW ≅ 478.10 ft btoc – WL meter was obstructed by tubing @ about 455 ft. Water has slight fuel and biological odor.

Logged By/Date: 10/4/18

Reviewed By/Date:

APTIM

Sample Collection Log

500433 KAFB Rapid Response ESTCP – Groundwater, Phase III, Passive

Location Code KAFB-106EX1

RFA/COC Number 500433EDBPT-GW045

Sample Number 106EX1-P3P-100418

Collection Date 10/4/18

Sampling Method Sample port

Collection Time 1445

Sample Type Grab

Start Depth 487

QC Code Normal a

End Depth 502

Sampling Equipment ~~Bladder Pump~~ Sample port

Sample Matrix GW

QC Partners None

Sample Team CL

Containers:

Analytical Suite	Filtered	Qty	Size	Container Type	Preservative	Lab
EDB by 8011	NA	3	40 mL	VOA Vials	HCl	Test America GA
VOCs by 8260	NA	3	40 mL	VOA Vials	HCl	Test America GA
O-Phosphate by SM4500 PE	Yes	1	250 mL	Poly Bottle	None	Test America CA
Dissolved Fe and Mn by 6010	Yes	1	250 mL	Poly Bottle	HNO3	Test America GA
Alkalinity by SM2320B	NA	1	250 mL	Poly Bottle	None	Test America CA
Anions (Chloride, Sulfate, Bromide, Nitrate-Nitrite) by EPA 9056	NA	1	125 mL	Poly Bottle	None	Test America GA
Iodide by EPA 300	NA	1	250 mL	Poly Bottle	None	Test America MO
Reduced Gases by RSKSOP-175/EPA 3810	NA	2	40 mL	VOA Vials	HCl	APTIM
VFA by EPA 300m	NA	2	40 mL	VOA Vials	None	APTIM

Event 2

Comments/Descriptions. DTW = 475.35 ft btoc. Water smells fouly

Logged By/Date: 10/4/18

Reviewed By/Date:

APTIM

Sample Collection Log

500433 KAFB Rapid Response ESTCP – Groundwater, Phase III, Passive

Location Code KAFB-106063

RFA/COC Number 500433EDBPT-GW045

Sample Number 106063-P3P-100418

Collection Date 10/4/18

Sampling Method Low Flow

Collection Time 1025

Sample Type Grab

Start Depth 508

QC Code Normal

End Depth 523

Sampling Equipment Bladder Pump

Sample Matrix GW

QC Partners None

Sample Team a

Containers:

Analytical Suite	Filtered	Qty	Size	Container Type	Preservative	Lab
EDB by 8011	NA	3	40 mL	VOA Vials	HCl	Test America GA
VOCs by 8260	NA	3	40 mL	VOA Vials	HCl	Test America GA
O-Phosphate by SM4500 PE	Yes	1	250 mL	Poly Bottle	None	Test America CA
Dissolved Fe and Mn by 6010	Yes	1	250 mL	Poly Bottle	HNO3	Test America GA
Alkalinity by SM2320B	NA	1	250 mL	Poly Bottle	None	Test America CA
Anions (Chloride, Sulfate, Bromide, Nitrate-Nitrite) by EPA 9056	NA	1	125 mL	Poly Bottle	None	Test America GA
Iodide by EPA 300	NA	1	250 mL	Poly Bottle	None	Test America MO
Reduced Gases by RSKSOP-175/EPA 3810	NA	2	40 mL	VOA Vials	HCl	APTIM
VFA by EPA 300m	NA	2	40 mL	VOA Vials	None	APTIM

Event 2

Comments/Descriptions: DTW ≅ 479 ftbtoc.

Logged By/Date: [signature] 10/4/18

Reviewed By/Date:

APTIM

Sample Collection Log

500433 KAFB Rapid Response ESTCP – Groundwater, Phase III, Passive

Location Code KAFB-106IN1

RFA/COC Number 500433EDBPT-GW045

Sample Number 106IN1-P3P-100418

Collection Date 10/4/18

Sampling Method Bailer

Collection Time 1230

Sample Type Grab

Start Depth 476

QC Code Normal

End Depth 481

Sampling Equipment Bailer

Sample Matrix GW

QC Partners None

Sample Team CL

Containers:

Analytical Suite	Filtered	Qty	Size	Container Type	Preservative	Lab
EDB by 8011	NA	3	40 mL	VOA Vials	HCl	Test America GA
VOCs by 8260	NA	3	40 mL	VOA Vials	HCl	Test America GA
O-Phosphate by SM4500 PE	Yes	1	250 mL	Poly Bottle	None	Test America CA
Dissolved Fe and Mn by 6010	Yes	1	250 mL	Poly Bottle	HNO3	Test America GA
Alkalinity by SM2320B	NA	1	250 mL	Poly Bottle	None	Test America CA
Anions (Chloride, Sulfate, Bromide, Nitrate-Nitrite) by EPA 9056	NA	1	125 mL	Poly Bottle	None	Test America GA
Iodide by EPA 300	NA	1	250 mL	Poly Bottle	None	Test America MO
Reduced Gases by RSKSOP-175/EPA 3810	NA	2	40 mL	VOA Vials	HCl	APTIM
VFA by EPA 300m	NA	2	40 mL	VOA Vials	None	APTIM

Comments/Descriptions. Event 2

DTW$_i$ = 475.35 ft bgs. Water smells extremely foul and is brown/gray w/ floating biological material.

Logged By/Date: CL 10/4/18

Reviewed By/Date: _____

APTIM

Sample Collection Log

500433 KAFB Rapid Response ESTCP – Groundwater, Phase III, Passive

Location Code KAFB-106MW1-S

RFA/COC Number 500433EDBPT-GW0

Sample Number 106MW1S-P3P-111418

Collection Date 11/14/18

Sampling Method Low Flow

Collection Time 1215

Sample Type Grab

Start Depth 463

QC Code Normal

End Depth 498

Sampling Equipment Bladder Pump

Sample Matrix GW

QC Partners None

Sample Team CL

Containers:

Analytical Suite	Filtered	Qty	Size	Container Type	Preservative	Lab
EDB by 8011	NA	3	40 mL	VOA Vials	HCl	Test America GA
VOCs by 8260	NA	3	40 mL	VOA Vials	HCl	Test America GA
Alkalinity by SM2320B	NA	1	250 mL	Poly Bottle	None	Test America CA
O-Phosphate by SM4500 PE	Yes	1	250 mL	Poly Bottle	None	Test America CA
Dissolved Fe and Mn by 6010	Yes	1	250 mL	Poly Bottle	HNO3	Test America GA
Anions (Chloride, Sulfate, Bromide, Nitrate-Nitrite) by EPA 9056	NA	1	125 mL	Poly Bottle	None	Test America GA
Iodide by EPA 300	NA	1	100 mL	Poly Bottle	None	Test America MO
Reduced Gases by RSKSOP-175/EPA 3810	NA	2	40 mL	VOA Vials	HCl	APTIM
VFA by EPA 300m	NA	2	40 mL	VOA Vials	None	APTIM
QuantArray-Chlor	NA	1	1 L	Poly Bottle	None	Microbial Insights

Comments/Descriptions. Month 3 Event.

DTW = 474.60 ft btoc.

Logged By/Date: 11/14/18

Reviewed By/Date:

APTIM

Sample Collection Log

500433 KAFB Rapid Response ESTCP – Groundwater, Phase III, Passive

Location Code KAFB-106MW1-I

RFA/COC Number 500433EDBPT-GW046

Sample Number 106MW1I-P3P-111418

Collection Date 11/14/18

Sampling Method Low Flow

Collection Time 1035

Sample Type Grab

Start Depth 513

QC Code Normal

End Depth 523

Sampling Equipment Bladder Pump

Sample Matrix GW

QC Partners None

Sample Team CL

Containers:

Analytical Suite	Filtered	Qty	Size	Container Type	Preservative	Lab
EDB by 8011	NA	3	40 mL	VOA Vials	HCl	Test America GA
VOCs by 8260	NA	3	40 mL	VOA Vials	HCl	Test America GA
Alkalinity by SM2320B	NA	1	250 mL	Poly Bottle	None	Test America CA
O-Phosphate by SM4500 PE	Yes	1	250 mL	Poly Bottle	None	Test America CA
Dissolved Fe and Mn by 6010	Yes	1	250 mL	Poly Bottle	HNO3	Test America GA
Anions (Chloride, Sulfate, Bromide, Nitrate-Nitrite) by EPA 9056	NA	1	125 mL	Poly Bottle	None	Test America GA
Iodide by EPA 300	NA	1	100 mL	Poly Bottle	None	Test America MO
Reduced Gases by RSKSOP-175/EPA 3810	NA	2	40 mL	VOA Vials	HCl	APTIM
VFA by EPA 300m	NA	2	40 mL	VOA Vials	None	APTIM
QuantArray-Chlor	NA	1	1 L	Poly Bottle	None	Microbial Insights

Comments/Descriptions. Month 3 Event.

Cannot measure DTW at 3" wells.

Logged By/Date: [signature] 11/14/18

Reviewed By/Date: _____

APTIM

Sample Collection Log

500433 KAFB Rapid Response ESTCP – Groundwater, Phase III, Passive

Location Code KAFB-106064

RFA/COC Number 500433EDBPT-GW046

Sample Number 106064-P3P-111418

Collection Date 11/14/18

Sampling Method Low Flow

Collection Time 0958

Sample Type Grab

Start Depth 488

QC Code Normal

End Depth 508

Sampling Equipment Bladder Pump

Sample Matrix GW

QC Partners None

Sample Team CL

Containers:

Analytical Suite	Filtered	Qty	Size	Container Type	Preservative	Lab
EDB by 8011	NA	3	40 mL	VOA Vials	HCl	Test America GA
VOCs by 8260	NA	3	40 mL	VOA Vials	HCl	Test America GA
Alkalinity by SM2320B	NA	1	250 mL	Poly Bottle	None	Test America CA
O-Phosphate by SM4500 PE	Yes	1	250 mL	Poly Bottle	None	Test America CA
Dissolved Fe and Mn by 6010	Yes	1	250 mL	Poly Bottle	HNO3	Test America GA
Anions (Chloride, Sulfate, Bromide, Nitrate-Nitrite) by EPA 9056	NA	1	125 mL	Poly Bottle	None	Test America GA
Iodide by EPA 300	NA	1	100 mL	Poly Bottle	None	Test America MO
Reduced Gases by RSKSOP-175/EPA 3810	NA	2	40 mL	VOA Vials	HCl	APTIM
VFA by EPA 300m	NA	2	40 mL	VOA Vials	None	APTIM
QuantArray-Chlor	NA	1	1 L	Poly Bottle	None	Microbial Insights

Comments/Descriptions. Month 3 Event.

DTW= 478.25 ft btoc. Water smells fouly.

Logged By/Date: 11/14/18

Reviewed By/Date:

APTIM

Sample Collection Log

500433 KAFB Rapid Response ESTCP – Groundwater, Phase III, Passive

Location Code KAFB-106MW2S

RFA/COC Number 500433EDBPT-GW047

Sample Number 106MW2S-P3P-111518

Collection Date 11/15/18

Sampling Method Low Flow

Collection Time 1430

Sample Type Grab

Start Depth 463

QC Code Normal

End Depth 498

Sampling Equipment Bladder Pump

Sample Matrix GW

QC Partners None

Sample Team a

Containers:

Analytical Suite	Filtered	Qty	Size	Container Type	Preservative	Lab
EDB by 8011	NA	3	40 mL	VOA Vials	HCl	Test America GA
VOCs by 8260	NA	3	40 mL	VOA Vials	HCl	Test America GA
Alkalinity by SM2320B	NA	1	250 mL	Poly Bottle	None	Test America CA
O-Phosphate by SM4500 PE	Yes	1	250 mL	Poly Bottle	None	Test America CA
Dissolved Fe and Mn by 6010	Yes	1	250 mL	Poly Bottle	HNO3	Test America GA
Anions (Chloride, Sulfate, Bromide, Nitrate-Nitrite) by EPA 9056	NA	1	125 mL	Poly Bottle	None	Test America GA
Iodide by EPA 300	NA	1	100 mL	Poly Bottle	None	Test America MO
Reduced Gases by RSKSOP-175/EPA 3810	NA	2	40 mL	VOA Vials	HCl	APTIM
VFA by EPA 300m	NA	2	40 mL	VOA Vials	None	APTIM
QuantArray-Chlor	NA	1	1 L	Poly Bottle	None	Microbial Insights

Comments/Descriptions. Month 3 Event.

Cannot measure DTW — tubing obstructs WL meter. Water smells fouly and like fuel.
EA is drilling approx. 75 feet to the SW of this well.

Logged By/Date: 11/15/18

Reviewed By/Date:

APTIM

Sample Collection Log

500433 KAFB Rapid Response ESTCP – Groundwater, Phase III, Passive

Location Code KAFB-106MW2-I

RFA/COC Number 500433EPBPT-GW047

Sample Number 106MW2I-P3P-111518

Collection Date 11/15/18

Sampling Method Low Flow

Collection Time 0950

Sample Type Grab

Start Depth 513

QC Code Normal

End Depth 523

Sampling Equipment Bladder Pump

Sample Matrix GW

QC Partners 106MW2I-P3P-111518-FD

Sample Team CL

Containers:

Analytical Suite	Filtered	Qty	Size	Container Type	Preservative	Lab
EDB by 8011	NA	3	40 mL	VOA Vials	HCl	Test America GA
VOCs by 8260	NA	3	40 mL	VOA Vials	HCl	Test America GA
Alkalinity by SM2320B	NA	1	250 mL	Poly Bottle	None	Test America CA
O-Phosphate by SM4500 PE	Yes	1	250 mL	Poly Bottle	None	Test America CA
Dissolved Fe and Mn by 6010	Yes	1	250 mL	Poly Bottle	HNO3	Test America GA
Anions (Chloride, Sulfate, Bromide, Nitrate-Nitrite) by EPA 9056	NA	1	125 mL	Poly Bottle	None	Test America GA
Iodide by EPA 300	NA	1	100 mL	Poly Bottle	None	Test America MO
Reduced Gases by RSKSOP-175/EPA 3810	NA	2	40 mL	VOA Vials	HCl	APTIM
VFA by EPA 300m	NA	2	40 mL	VOA Vials	None	APTIM
QuantArray-Chlor	NA	1	1 L	Poly Bottle	None	Microbial Insights

Comments/Descriptions. Month 3 Event.

DTW cannot be measured @ 3" wells. Water has slight fuel odor.

Logged By/Date: [signature] 11/15/18

Reviewed By/Date:

APTIM

Sample Collection Log

500433 KAFB Rapid Response ESTCP – Groundwater, Phase III, Passive

Location Code KAFB-106063

RFA/COC Number 500433EDB PT-GW047

Sample Number 106063-P3P-111518

Collection Date 11/15/18

Sampling Method Low Flow

Collection Time 0920

Sample Type Grab

Start Depth 508

QC Code Normal

End Depth 523

Sampling Equipment Bladder Pump

Sample Matrix GW

QC Partners None

Sample Team CL

Containers:

Analytical Suite	Filtered	Qty	Size	Container Type	Preservative	Lab
EDB by 8011	NA	3	40 mL	VOA Vials	HCl	Test America GA
VOCs by 8260	NA	3	40 mL	VOA Vials	HCl	Test America GA
Alkalinity by SM2320B	NA	1	250 mL	Poly Bottle	None	Test America CA
O-Phosphate by SM4500 PE	Yes	1	250 mL	Poly Bottle	None	Test America CA
Dissolved Fe and Mn by 6010	Yes	1	250 mL	Poly Bottle	HNO3	Test America GA
Anions (Chloride, Sulfate, Bromide, Nitrate-Nitrite) by EPA 9056	NA	1	125 mL	Poly Bottle	None	Test America GA
Iodide by EPA 300	NA	1	100 mL	Poly Bottle	None	Test America MO
Reduced Gases by RSKSOP-175/EPA 3810	NA	2	40 mL	VOA Vials	HCl	APTIM
VFA by EPA 300m	NA	2	40 mL	VOA Vials	None	APTIM
QuantArray-Chlor	NA	1	1 L	Poly Bottle	None	Microbial Insights

Comments/Descriptions. Month 3 Event.

DTW=479. ftbtoc. Water has slight fuel odor.

Logged By/Date: 11/15/18

Reviewed By/Date:

APTIM

Sample Collection Log

500433 KAFB Rapid Response ESTCP – Groundwater, Phase III, Passive

Location Code KAFB-106EX2

RFA/COC Number 500433EDBPT-GW049

Sample Number 106EX2-P3P-111918

Collection Date 11/19/18

Sampling Method Low Flow

Collection Time 1445

Sample Type Grab

Start Depth 487

QC Code Normal

End Depth 502

Sampling Equipment Sampleport

Sample Matrix GW

QC Partners None

Sample Team CL, JV

Containers:

Analytical Suite	Filtered	Qty	Size	Container Type	Preservative	Lab
EDB by 8011	NA	3	40 mL	VOA Vials	HCl	Test America GA
VOCs by 8260	NA	3	40 mL	VOA Vials	HCl	Test America GA
Alkalinity by SM2320B	NA	1	250 mL	Poly Bottle	None	Test America CA
O-Phosphate by SM4500 PE	Yes	1	250 mL	Poly Bottle	None	Test America CA
Dissolved Fe and Mn by 6010	Yes	1	250 mL	Poly Bottle	HNO3	Test America GA
Anions (Chloride, Sulfate, Bromide, Nitrate-Nitrite) by EPA 9056	NA	1	125 mL	Poly Bottle	None	Test America GA
Iodide by EPA 300	NA	1	100 mL	Poly Bottle	None	Test America MO
Reduced Gases by RSKSOP-175/EPA 3810	NA	2	40 mL	VOA Vials	HCl	APTIM
VFA by EPA 300m	NA	2	40 mL	VOA Vials	None	APTIM
QuantArray-Chlor	NA	1	1 L	Poly Bottle	None	Microbial Insights

Comments/Descriptions. Month 3 Event.

DTWi = 474.61 ft btoc. EA is drilling w/ Akcti ng approx. 100 ft away. Running well @ 2gpm.

Logged By/Date: 11/19/18

Reviewed By/Date:

APTIM

Sample Collection Log

500433 KAFB Rapid Response ESTCP – Groundwater, Phase III, Passive

Location Code KAFB-106EX1

RFA/COC Number 500433EDBPT-GW049

Sample Number 106EX1-P3P-111918

Collection Date 11/19/18

Sampling Method Low Flow

Collection Time 1350

Sample Type Grab

Start Depth 487

QC Code Normal

End Depth 502

Sampling Equipment Sample port

Sample Matrix GW

QC Partners None

Sample Team CL, JV

Containers:

Analytical Suite	Filtered	Qty	Size	Container Type	Preservative	Lab
EDB by 8011	NA	3	40 mL	VOA Vials	HCl	Test America GA
VOCs by 8260	NA	3	40 mL	VOA Vials	HCl	Test America GA
Alkalinity by SM2320B	NA	1	250 mL	Poly Bottle	None	Test America CA
O-Phosphate by SM4500 PE	Yes	1	250 mL	Poly Bottle	None	Test America CA
Dissolved Fe and Mn by 6010	Yes	1	250 mL	Poly Bottle	HNO3	Test America GA
Anions (Chloride, Sulfate, Bromide, Nitrate-Nitrite) by EPA 9056	NA	1	125 mL	Poly Bottle	None	Test America GA
Iodide by EPA 300	NA	1	100 mL	Poly Bottle	None	Test America MO
Reduced Gases by RSKSOP-175/EPA 3810	NA	2	40 mL	VOA Vials	HCl	APTIM
VFA by EPA 300m	NA	2	40 mL	VOA Vials	None	APTIM
QuantArray-Chlor	NA	1	1 L	Poly Bottle	None	Microbial Insights

Comments/Descriptions. Month 3 Event.

DTW$_i$ = 474.50 ft btoc. EA is drilling w/ ARCH rig approx. 100 ft away. Running pump @ 2gpm. Water smells like fuel.

Logged By/Date: 11/19/18

Reviewed By/Date:

APTIM

Sample Collection Log

500433 KAFB Rapid Response ESTCP – Groundwater, Phase III, Passive

Location Code KAFB-106IN1

RFA/COC Number 500433EDBPT-GW049

Sample Number 106IN1-P3P-111918

Collection Date 11/19/18

Sampling Method Bailing

Collection Time 1045

Sample Type Grab

Start Depth ~~at~~ 476

QC Code Normal

End Depth ~~at~~ 481

Sampling Equipment Bailer

Sample Matrix GW

QC Partners None

Sample Team CL, JV

Containers:

Analytical Suite	Filtered	Qty	Size	Container Type	Preservative	Lab
EDB by 8011	NA	3	40 mL	VOA Vials	HCl	Test America GA
VOCs by 8260	NA	3	40 mL	VOA Vials	HCl	Test America GA
Alkalinity by SM2320B	NA	1	250 mL	Poly Bottle	None	Test America CA
O-Phosphate by SM4500 PE	~~Yes~~ No	1	250 mL	Poly Bottle	None	Test America CA
Dissolved Fe and Mn by 6010	~~Yes~~ No	1	250 mL	Poly Bottle	~~HNO3~~ None	Test America GA
Anions (Chloride, Sulfate, Bromide, Nitrate-Nitrite) by EPA 9056	NA	1	125 mL	Poly Bottle	None	Test America GA
Iodide by EPA 300	NA	1	100 mL	Poly Bottle	None	Test America MO
Reduced Gases by RSKSOP-175/EPA 3810	NA	2	40 mL	VOA Vials	HCl	APTIM
VFA by EPA 300m	NA	2	40 mL	VOA Vials	None	APTIM
QuantArray-Chlor	NA	1	1 L	Poly Bottle	None	Microbial Insights

Comments/Descriptions. Month 3 Event.

DTWi = 474.57 ftbtoc. Water is dark brown and smells like sewage. No associated purge log.

Logged By/Date: [signature] 11/19/18

Reviewed By/Date:

APTIM

Sample Collection Log

500433 KAFB Rapid Response ESTCP – Groundwater, Phase 4, Passive

Location Code KAFB-106064

RFA/COC Number 500433EPB PT-GW050

Sample Number 106064-PAP-011619

Collection Date 1/16/19

Sampling Method ~~B~~ Low Flow

Collection Time 0955

Sample Type Grab

Start Depth 488

QC Code 106064-PAP-011619-FD

End Depth 508

Sampling Equipment Bladder Pump

Sample Matrix GW

QC Partners Normal

Sample Team CL

Containers:

Analytical Suite	Filtered	Qty	Size	Container Type	Preservative	Lab
EDB by 8011	NA	3	40 mL	VOA Vials	HCl	Test America GA
VOCs by 8260	NA	3	40 mL	VOA Vials	HCl	Test America GA
O-Phosphate by SM4500 PE	Yes	1	250 mL	Poly Bottle	None	Test America CA
Dissolved Fe and Mn by 6010	Yes	1	250 mL	Poly Bottle	HNO3	Test America GA
Alkalinity by SM2320B	NA	1	250 mL	Poly Bottle	None	Test America CA
Anions (Chloride, Sulfate, Bromide, Nitrate-Nitrite) by EPA 9056	NA	1	125 mL	Poly Bottle	None	Test America GA
Iodide by EPA 300	NA	1	250 mL	Poly Bottle	None	Test America MO
Reduced Gases by RSKSOP-175/EPA 3810	NA	2	40 mL	VOA Vials	HCl	APTIM
VFA by EPA 300m	NA	2	40 mL	VOA Vials	None	APTIM
Microbial	NA	1	1L	Poly bottle	None	Microbial Insights

Comments/Descriptions: DTW=478.15 ft btoc. Water has slight fuel odor, yellow tint.

Logged By/Date: [signature] 1/16/19

Reviewed By/Date: _____

APTIM

Sample Collection Log

500433 KAFB Rapid Response ESTCP – Groundwater, Phase 4, Passive

Location Code KAFB-106MW1-I

RFA/COC Number 500433EDBPT-GW050

Sample Number 106MW1I-PAP-011619

Collection Date 1/16/19

Sampling Method Low Flow

Collection Time 1122

Sample Type Grab

Start Depth 513

QC Code Normal

End Depth 523

Sampling Equipment Bladder Pump

Sample Matrix GW

QC Partners None

Sample Team a

Containers:

Analytical Suite	Filtered	Qty	Size	Container Type	Preservative	Lab
EDB by 8011	NA	3	40 mL	VOA Vials	HCl	Test America GA
VOCs by 8260	NA	3	40 mL	VOA Vials	HCl	Test America GA
O-Phosphate by SM4500 PE	Yes	1	250 mL	Poly Bottle	None	Test America CA
Dissolved Fe and Mn by 6010	Yes	1	250 mL	Poly Bottle	HNO3	Test America GA
Alkalinity by SM2320B	NA	1	250 mL	Poly Bottle	None	Test America CA
Anions (Chloride, Sulfate, Bromide, Nitrate-Nitrite) by EPA 9056	NA	1	125 mL	Poly Bottle	None	Test America GA
Iodide by EPA 300	NA	1	250 mL	Poly Bottle	None	Test America MO
Reduced Gases by RSKSOP-175/EPA 3810	NA	2	40 mL	VOA Vials	HCl	APTIM
VFA by EPA 300m	NA	2	40 mL	VOA Vials	None	APTIM
Microbial	NA	1	1L	poly bottle	None	Microbial Insight

Comments/Descriptions: Cannot measure DTW at 3" wells - tubing bundle obstructs.

Logged By/Date: 1/16/19

Reviewed By/Date:

APTIM

Sample Collection Log

500433 KAFB Rapid Response ESTCP – Groundwater, Phase 4, Passive

Location Code KAFB-106MW1-S

RFA/COC Number 500433EDBPT-GW050

Sample Number 106MW1S-P4P-011619

Collection Date 1/16/19

Sampling Method Low Flow

Collection Time 1320

Sample Type Grab

Start Depth 463

QC Code Normal

End Depth 498

Sampling Equipment Bladder Pump

Sample Matrix GW

QC Partners N/A

Sample Team CL

Containers:

Analytical Suite	Filtered	Qty	Size	Container Type	Preservative	Lab
EDB by 8011	NA	3	40 mL	VOA Vials	HCl	Test America GA
VOCs by 8260	NA	3	40 mL	VOA Vials	HCl	Test America GA
Alkalinity by SM2320B	NA	1	250 mL	Poly Bottle	None	Test America CA
O-Phosphate by SM4500 PE	Yes	1	250 mL	Poly Bottle	None	Test America CA
Dissolved Fe and Mn by 6010	Yes	1	250 mL	Poly Bottle	HNO3	Test America GA
Anions (Chloride, Sulfate, Bromide, Nitrate-Nitrite) by EPA 9056	NA	1	125 mL	Poly Bottle	None	Test America GA
Iodide by EPA 300	NA	1	100 mL	Poly Bottle	None	Test America MO
Reduced Gases by RSKSOP-175/EPA 3810	NA	2	40 mL	VOA Vials	HCl	APTIM
VFA by EPA 300m	NA	2	40 mL	VOA Vials	None	APTIM
QuantArray-Chlor	NA	1	1 L	Poly Bottle	None	Microbial Insights

Comments/Descriptions: DTW = 473.60 ft btoc. No LNAPL.

Logged By/Date: 1/16/19

Reviewed By/Date:

APTIM

Sample Collection Log

500433 KAFB Rapid Response ESTCP – Groundwater, Phase 4, Passive

Location Code KAFB-106063

Sample Number 106063-PAP-011719

Sampling Method Low Flow

Sample Type Grab

QC Code Normal

Sampling Equipment Bladder Pump

QC Partners None

RFA/COC Number 500433EDBPT-050

Collection Date 1/17/19

Collection Time 0955

Start Depth 508

End Depth 523

Sample Matrix GW

Sample Team CC

Containers:

Analytical Suite	Filtered	Qty	Size	Container Type	Preservative	Lab
EDB by 8011	NA	3	40 mL	VOA Vials	HCl	Test America GA
VOCs by 8260	NA	3	40 mL	VOA Vials	HCl	Test America GA
Alkalinity by SM2320B	NA	1	250 mL	Poly Bottle	None	Test America CA
O-Phosphate by SM4500 PE	Yes	1	250 mL	Poly Bottle	None	Test America CA
Dissolved Fe and Mn by 6010	Yes	1	250 mL	Poly Bottle	HNO3	Test America GA
Anions (Chloride, Sulfate, Bromide, Nitrate-Nitrite) by EPA 9056	NA	1	125 mL	Poly Bottle	None	Test America GA
Iodide by EPA 300	NA	1	100 mL	Poly Bottle	None	Test America MO
Reduced Gases by RSKSOP-175/EPA 3810	NA	2	40 mL	VOA Vials	HCl	APTIM
VFA by EPA 300m	NA	2	40 mL	VOA Vials	None	APTIM
QuantArray-Chlor	NA	1	1 L	Poly Bottle	None	Microbial Insights

Comments/Descriptions: DTW=479.03 ft btoc.

Logged By/Date: 1/17/19

Reviewed By/Date:

APTIM

Sample Collection Log

500433 KAFB Rapid Response ESTCP – Groundwater, Phase 4, Passive

Location Code KAFB-106MW2I

RFA/COC Number 500433 ERB PT-GW051

Sample Number 106MW2I-PHP-011719

Collection Date 01/17/19

Sampling Method Low flow

Collection Time 1025

Sample Type Grab

Start Depth 513'

QC Code Normal

End Depth 523

Sampling Equipment Bladder Pump

Sample Matrix GW

QC Partners N/A

Sample Team CH + CL

Containers:

Analytical Suite	Filtered	Qty	Size	Container Type	Preservative	Lab
EDB by 8011	NA	3	40 mL	VOA Vials	HCl	Test America GA
VOCs by 8260	NA	3	40 mL	VOA Vials	HCl	Test America GA
Alkalinity by SM2320B	NA	1	250 mL	Poly Bottle	None	Test America CA
O-Phosphate by SM4500 PE	Yes	1	250 mL	Poly Bottle	None	Test America CA
Dissolved Fe and Mn by 6010	Yes	1	250 mL	Poly Bottle	HNO3	Test America GA
Anions (Chloride, Sulfate, Bromide, Nitrate-Nitrite) by EPA 9056	NA	1	125 mL	Poly Bottle	None	Test America GA
Iodide by EPA 300	NA	1	100 mL	Poly Bottle	None	Test America MO
Reduced Gases by RSKSOP-175/EPA 3810	NA	2	40 mL	VOA Vials	HCl	APTIM
VFA by EPA 300m	NA	2	40 mL	VOA Vials	None	APTIM
QuantArray-Chlor	NA	1	1 L	Poly Bottle	None	Microbial Insights

Comments/Descriptions.

Cannot measure DTW @ 3" wells

Logged By/Date: E. Hardee 1/17/19

Reviewed By/Date: _____

APTIM

Sample Collection Log

500433 KAFB Rapid Response ESTCP – Groundwater, Phase 4, Passive

Location Code KAFB-106MW2-S

RFA/COC Number 500433EDBPT-GW051

Sample Number 106MW2S-P4P-011719

Collection Date 1/17/19

Sampling Method LowFlow

Collection Time 1310

Sample Type Grab

Start Depth 463

QC Code Normal

End Depth 498

Sampling Equipment Bladder Pump

Sample Matrix GW

QC Partners N/A

Sample Team CV, CH

Containers:

Analytical Suite	Filtered	Qty	Size	Container Type	Preservative	Lab
EDB by 8011	NA	3	40 mL	VOA Vials	HCl	Test America GA
VOCs by 8260	NA	3	40 mL	VOA Vials	HCl	Test America GA
Alkalinity by SM2320B	NA	1	250 mL	Poly Bottle	None	Test America CA
O-Phosphate by SM4500 PE	Yes	1	250 mL	Poly Bottle	None	Test America CA
Dissolved Fe and Mn by 6010	Yes	1	250 mL	Poly Bottle	HNO3	Test America GA
Anions (Chloride, Sulfate, Bromide, Nitrate-Nitrite) by EPA 9056	NA	1	125 mL	Poly Bottle	None	Test America GA
Iodide by EPA 300	NA	1	100 mL	Poly Bottle	None	Test America MO
Reduced Gases by RSKSOP-175/EPA 3810	NA	2	40 mL	VOA Vials	HCl	APTIM
VFA by EPA 300m	NA	2	40 mL	VOA Vials	None	APTIM
QuantArray-Chlor	NA	1	1 L	Poly Bottle	None	Microbial Insights

Comments/Descriptions: Cannot measure DTW at 3" wells.
Water is turbid to start.

Logged By/Date: 1/17/19

Reviewed By/Date:

APTIM

Sample Collection Log

500433 KAFB Rapid Response ESTCP – Groundwater, Phase 4, Passive

Location Code KAFB-106EX2

RFA/COC Number 500433EDBPT-GW052

Sample Number 106EX2-P4P-012119

Collection Date 1/21/19

Sampling Method Low Flow

Collection Time 1308

Sample Type Grab

Start Depth 487

QC Code Normal

End Depth 502

Sampling Equipment Sample Port

Sample Matrix GW

QC Partners N/A

Sample Team CL, JT

Containers:

Analytical Suite	Filtered	Qty	Size	Container Type	Preservative	Lab
EDB by 8011	NA	3	40 mL	VOA Vials	HCl	Test America GA
VOCs by 8260	NA	3	40 mL	VOA Vials	HCl	Test America GA
Alkalinity by SM2320B	NA	1	250 mL	Poly Bottle	None	Test America CA
O-Phosphate by SM4500 PE	Yes	1	250 mL	Poly Bottle	None	Test America CA
Dissolved Fe and Mn by 6010	Yes	1	250 mL	Poly Bottle	HNO3	Test America GA
Anions (Chloride, Sulfate, Bromide, Nitrate-Nitrite) by EPA 9056	NA	1	125 mL	Poly Bottle	None	Test America GA
Iodide by EPA 300	NA	1	100 mL	Poly Bottle	None	Test America MO
Reduced Gases by RSKSOP-175/EPA 3810	NA	2	40 mL	VOA Vials	HCl	APTIM
VFA by EPA 300m	NA	2	40 mL	VOA Vials	None	APTIM
QuantArray-Chlor	NA	1	1 L	Poly Bottle	None	Microbial Insights

Comments/Descriptions: DTWi = 473.35 ft bgs

Logged By/Date: 1/21/19

Reviewed By/Date:

APTIM

Sample Collection Log

500433 KAFB Rapid Response ESTCP – Groundwater, Phase 4, Passive

Location Code KAFB-106EX1

RFA/COC Number 500433EDBPT-GW052

Sample Number 106EX1-P4P-012119

Collection Date 1/21/19

Sampling Method Low Flow

Collection Time 1210

Sample Type Grab

Start Depth 487

QC Code Normal

End Depth 502

Sampling Equipment Sample Port

Sample Matrix GW

QC Partners N/A

Sample Team CL, JT

Containers:

Analytical Suite	Filtered	Qty	Size	Container Type	Preservative	Lab
EDB by 8011	NA	3	40 mL	VOA Vials	HCl	Test America GA
VOCs by 8260	NA	3	40 mL	VOA Vials	HCl	Test America GA
Alkalinity by SM2320B	NA	1	250 mL	Poly Bottle	None	Test America CA
O-Phosphate by SM4500 PE	Yes	1	250 mL	Poly Bottle	None	Test America CA
Dissolved Fe and Mn by 6010	Yes	1	250 mL	Poly Bottle	HNO3	Test America GA
Anions (Chloride, Sulfate, Bromide, Nitrate-Nitrite) by EPA 9056	NA	1	125 mL	Poly Bottle	None	Test America GA
Iodide by EPA 300	NA	1	100 mL	Poly Bottle	None	Test America MO
Reduced Gases by RSKSOP-175/EPA 3810	NA	2	40 mL	VOA Vials	HCl	APTIM
VFA by EPA 300m	NA	2	40 mL	VOA Vials	None	APTIM
QuantArray-Chlor	NA	1	1 L	Poly Bottle	None	Microbial Insights

Comments/Descriptions. DTW$_i$ = 473.52 ft bgs.

Logged By/Date: 1/21/19

Reviewed By/Date:

APTIM

Sample Collection Log

500433 KAFB Rapid Response ESTCP – Groundwater, Phase 4, Passive

Location Code: KAFB-106IN1

RFA/COC Number: 500433EDBPT-GW052

Sample Number: 106IN1-PAP-012119

Collection Date: 1/21/19

Sampling Method: Bailing

Collection Time: 0900

Sample Type: Grab

Start Depth: 477

QC Code: Normal

End Depth: 497

Sampling Equipment: Bailer

Sample Matrix: GW

QC Partners: N/A

Sample Team: CL, JT

Containers:

Analytical Suite	Filtered	Qty	Size	Container Type	Preservative	Lab
EDB by 8011	NA	3	40 mL	VOA Vials	HCl	Test America GA
VOCs by 8260	NA	3	40 mL	VOA Vials	HCl	Test America GA
Alkalinity by SM2320B	NA	1	250 mL	Poly Bottle	None	Test America CA
O-Phosphate by SM4500 PE	No ~~Yes~~	1	250 mL	Poly Bottle	None	Test America CA
Dissolved Fe and Mn by 6010	No ~~Yes~~	1	250 mL	Poly Bottle	None ~~HNO3~~	Test America GA
Anions (Chloride, Sulfate, Bromide, Nitrate-Nitrite) by EPA 9056	NA	1	125 mL	Poly Bottle	None	Test America GA
Iodide by EPA 300	NA	1	100 mL	Poly Bottle	None	Test America MO
Reduced Gases by RSKSOP-175/EPA 3810	NA	2	40 mL	VOA Vials	HCl	APTIM
VFA by EPA 300m	NA	2	40 mL	VOA Vials	None	APTIM
QuantArray-Chlor	NA	1	1 L	Poly Bottle	None	Microbial Insights

Comments/Descriptions: DTWi = 473.60 ft bgs

Water is grey and smells like sewage. No purge log.

Logged By/Date: [signature] 1/21/19

Reviewed By/Date:

APPENDIX G

Data Quality Evaluation Report

G-1. Data Quality Evaluation Report – June 2017 – January 2019

G-2. Groundwater Data Packages

ACRONYMS AND ABBREVIATIONS

%	percent
%D	percent difference
BFF	Bulk Fuels Facility
CCV	continuing calibration verification
DoD	U.S. Department of Defense
EDB	1,2-dibromoethane/ethylene dibromide
EPA	U.S. Environmental Protection Agency
ICP	inductively coupled plasma
ICS	interference check sample
ICV	initial calibration verification
KAFB	Kirtland Air Force Base
LCS	laboratory control sample
LCSD	laboratory control sample duplicate
LOQ	limit of quantitation
mL	milliliter
MS	matrix spike
MSD	matrix spike duplicate
QAPjP	Quality Assurance Project Plan
QC	quality control
QSM	Quality Systems Manual
RPD	relative percent difference
SDG	sample delivery group
SM	Standard Method
SOP	standard operating procedure
USACE	U.S. Army Corps of Engineers
VFA	volatile fatty acid
VOC	volatile organic compound

APPENDIX G-1

Data Quality Evaluation Report – Groundwater
June 2017 – January 2019

G-1. DATA QUALITY EVALUATION REPORT – GROUNDWATER JUNE 2017 – JANUARY 2019

1. LABORATORY DATA QUALITY SUMMARY

This Data Quality Evaluation Report describes the findings of the review of data for the 1,2-dibromomethane (EDB) in situ biodegradation pilot test (hereby referred to as the Pilot Test) groundwater monitoring conducted between June 29, 2017 and January 21, 2019, and is provided to document the quality of the analytical data used in the *Ethylene Dibromide In Situ Biodegradation Pilot Test Report, Bulk Fuels Facility, Solid Waste Management Unit ST-106/SS-111, Kirtland Air Force Base, New Mexico*. Groundwater monitoring activities were conducted in accordance with the requirements specified in the *Ethylene Dibromide in Situ Biodegration Pilot Test Work Plan, Bulk Fuels Facility, Kirtland Air Force Base, New Mexico* (U.S. Army Corps of Engineers [USACE], 2016, Pilot Test Work Plan). Sampling procedures and overall quality control (QC) and quality assurance protocols for the groundwater monitoring activities are presented in the *Quality Assurance Project Plan, Bulk Fuels Facility Spill, Solid Waste Management Units ST-106 and SS-111, Kirtland Air Force Base, Albuquerque, New Mexico* (USACE, 2011).

The Pilot Test consisted of four phases:

- Phase 1: Evaluation of Baseline Conditions and Conservative Tracer Testing
- Phase 2: Evaluation of Biostimulation
- Phase 3: Additional Biostimulation
- Phase 4: Rebound Monitoring

During each of the four phases, multiple sampling events were conducted at the frequencies specified in the Pilot Test Work Plan. Groundwater samples were collected from six monitoring wells (Kirtland Air Force Base [KAFB]-106063, KAFB-106064, KAFB-106MW1-I, KAFB-106MW1-S, KAFB-106MW2-I,

and KAFB-106MW2-S), two extraction wells (KAFB-106EX1 and KAFB-106EX2), and one injection well (KAFB-106IN1). Specific sampling locations and parameter analyzed for each sampling event are presented in the Pilot Test Work Plan. During each sampling event, groundwater and field QC samples were collected and submitted to off-site laboratories and analyzed for the following list of parameters:

- Volatile organic compounds (VOCs) – U.S. Environmental Protection Agency (EPA) Method SW8260B
- EDB – EPA Method SW8011
- Dissolved iron and manganese – EPA Method SW6010C
- Anions (chloride, sulfate, bromide, nitrate, and nitrite) – EPA Method SW9056A
- Dissolved o-phosphate – EPA Method SW9056A or Standard Method (SM) 4500PE
- Nitrate and nitrite as nitrogen – EPA Method 353.2
- Alkalinity – SM2320B
- Iodide – EPA Method 300.0
- volatile fatty acids (VFAs)– EPA Method 300.0 M (modified)
- Dissolved gases – RSK 175

During the entire sampling period, the VFAs and dissolved gases analyses were conducted by Aptim Federal Services, LLC (APTIM) laboratory in Lawrenceville, New Jersey, while the iodide analysis was performed by Test America in Earth City, Missouri. Between the baseline event in June 2017 and Phase 2 groundwater monitoring event in July 2018, samples were shipped to Empirical Laboratories LLC in Nashville, Tennessee for the remaining listed analyses. In August 2018, after the primary laboratory Empirical went out of business groundwater samples were shipped to Test America in West Sacramento, California for dissolved o-phosphate and alkalinity analyses, and Test America in Savannah for VOC, EDB, dissolved metals, and anions analyses. Empirical Laboratories and Test America in all three locations hold a current U.S. Department of Defense (DoD) Environmental Laboratory Accreditation Program certification to perform the listed analyses.

In addition to above, groundwater samples were collected at the frequencies specified in the Pilot Test Work Plan and analyzed for the following parameters by the listed laboratories:

- QuantArray Chlor – Microbial Insights Laboratory Standard Operating Procedure (SOP)
- Fluorescein– Crawford Hydrology Laboratory SOP (Spectrofluorophotometry)
- Hydrogen stable isotope – Reston Stable Isotope Laboratory SOP (Hydrogen/H_2O Equilibration Isotope Ratio Mass Spectrometry)
- EDB stable isotope – University of Oklahoma SOP (Kuder et al. 2012)

All analytical results from each sampling event were reported by off-site laboratories and were received in sample delivery groups (SDGs). Appendix G-1 – Table 1 (provided at the end of this report) summarizes sample collection dates, sample numbers, sample locations, laboratories, sample types, analysis methods, and SDG numbers. An EPA Level III data review was performed for all groundwater samples submitted for VOCs, EDB, dissolved metals, wet chemistry parameters, VFAs, and dissolved gases analyses. The review was performed in accordance with the guidelines and control criteria specified in the following documents:

- The Bulk Fuels Facility (BFF) Spill Quality Assurance Project Plan (QAPjP) (USACE, 2011)
- *DoD Quality Systems Manual for Environmental Laboratories, Version 5.1* (2017)
- *Test Methods for Evaluating Solid Waste, Physical/Chemical Methods (2006), SW-846* (EPA, 1996 and updates)
- *Standard Methods for the Examination of Water and Wastewater (21st Edition)* (American Public Health Association et al., 2005)
- *Environmental Quality – Guidance for Evaluating Performance-Based Chemical Data,* EM 200-1-10 (USACE, 2005)
- *USEPA Contract Laboratory Program, National Functional Guidelines for Organic Superfund Methods Data Review, Final* (EPA, 2017)
- *USEPA Contract Laboratory Program, National Functional Guidelines for Inorganic Superfund Methods Data Review, Final* (EPA, 2017)

The following QC elements were included in the EPA Level III data review:

- Sample preservation and sample extraction and analysis holding times
- Laboratory method blanks
- Initial and continuing calibration blanks (metals and anions analyses only)
- Surrogate recoveries (organic analyses only)
- Laboratory control sample (LCS)/laboratory control sample duplicate (LCSD) recoveries
- Matrix spike (MS)/matrix spike duplicate (MSD) recoveries
- Relative percent differences (RPDs)
- Initial calibration and initial calibration verifications (ICVs)
- Continuing calibration verifications (CCVs)
- Inductively coupled plasma (ICP) interference check samples (ICS) (metal analysis only)
- ICP serial dilutions (metal analysis only)
- Sample confirmation (EDB analysis only)
- Field blanks
- Field duplicates

In addition to the above EPA Level III review, an EPA Level II review was completed for the results of chlorinated QuantArray-Chlor, fluorescein dye, hydrogen stable isotope, and EDB stable isotope analyses. The following QC elements, when applicable, were included in the EPA Level II data review:

- Sample preservation and analysis holding times
- Laboratory method blanks
- LCS recoveries
- Laboratory duplicates
- Analytical completeness

Analytical data were reviewed in terms of precision, bias, representativeness, comparability, and completeness as follows:

- *Bias* is demonstrated by recovery of target analytes from fortified blank and sample matrices, LCS/LCSD, and MS/MSD, respectively. For organic methods, bias is also demonstrated through recovery of surrogates from each field and QC sample. The recovery of target analytes from fortified samples is compared with the acceptance criteria defined in the site-specific QAPjP (USACE, 2011) and DoD 2017 Quality Systems Manual (QSM). When the acceptance criteria are not available in the site-specific QAPjP or DoD QSM, results are compared with the laboratory in-house control limits. When these criteria are not met, the data are qualified accordingly.
- *Precision* is expressed as the RPD between the results of replicate sample analyses: sample duplicates, LCSDs, and MSDs. When analyte RPDs exceed the acceptance criteria, the data are qualified accordingly.
- *Representativeness* of the samples submitted for analysis is ensured by adherence to standard sampling techniques and protocols.
- *Comparability* of sample results is ensured through the use of approved sampling and analysis methods.
- *Completeness* is expressed as a ratio of the number of usable data points to the total number of analytical data results.

The following sections present the EPA Level III and Level II data review findings. The discussion summarizes data quality exceedances and their potential impact on the quality and usability of analytical results. Appendix G-1 – Table 2 presents definitions of data qualification and reason codes applied to the analytical results. Appendix G-1 – Table 3 summarizes the qualified data. For informational purposes, qualified field QC data are also presented in this table.

1.1 Data Quality Outliers

1.1.1 Sample Preservation and Sample Extraction and Analysis Holding Times (Reason Code H)

The sample coolers and samples contained within were received intact at the laboratories and were held within the required 0 to 6 degrees Celsius, and when required, were chemically preserved in accordance with EPA and SM preservation requirements.

On June 14, 2018, 6 groundwater samples and 1 duplicate were collected and shipped to Lawrenceville, New Jersey for VFAs and dissolved gases analyses. Samples were stored on ice and chemically preserved (when applicable) after sampling and during shipping; however, due to UPS shipping delays the cooler was not delivered to the laboratory until June 18, 2018. The temperature of the cooler was recorded at 23 degree Celsius upon sample receipt exceeding the upper cooler temperature limit of 6 degree Celsius. The affected samples were analyzed as soon as they were received and completed within the holding time requirements. The results of VFAs and dissolved gases in all samples were qualified as estimated (J-/UJ) because of the non-complaint cooler temperature.

On August 7 and 8, 2018, samples for VOCs, EDB, anions, and dissolved metals analyses were shipped to the primary laboratory Empirical. Samples were received in good condition and stored in a refrigerator at the laboratory. After Empirical went out of business in mid-August 2018, samples collected on August 8, 2018 were re-directed to Test America in Savannah and West Sacramento for analysis. Samples were received by Test America on August 16, 2018 in good condition and within the temperature preservation requirement and within the holding time requirements with the exception of o-phosphate and nitrate and nitrite as nitrogen. Samples from August 7, 2018 sample date were not recovered from Empirical and were not analyzed and reported by either Empirical or Test America.

Sample holding times were evaluated by comparing the sample collection dates to the sample extraction and analysis dates. Extraction and analysis holding times were reviewed for all samples to determine the validity of the sample results. Holding time exceedances were reported for VOCs and wet chemistry samples. The affected sample numbers, methods, target analytes, holing time outliers, and holding time requirements are summarized below.

Table 1.1.1a: Summary of Holding Time Exceedance

Sample Number	Analytical Method	Target Analyte	Holding Time Outlier	Holding Time Requirement	Data Qualification
106IN1-BL-062917	SW9056A	Bromide	18 days for analysis	14 days	J- for detected results and UJ for non-detected results
106EX1-BL-062917		Bromide	18 days for analysis	14 days	
106EX2-BL-062917		Bromide	18 days for analysis	14 days	
106MW1S-P2P-061418	SM2320	Alkalinity	28 days for analysis	14 days	
106MW2S-P2P-061418		Alkalinity	28 days for analysis	14 days	
106064-P2P-061418		Alkalinity	28 days for analysis	14 days	
106064-P2P-061418-FD		Alkalinity	28 days for analysis	14 days	
106IN1-P2P-061418		Alkalinity	28 days for analysis	14 days	
106EX1-P2P-061418		Alkalinity	28 days for analysis	14 days	
106EX2-P2P-061418		Alkalinity	28 days for analysis	14 days	
106064-P2P-030718	SM4500PE	O-phosphate	52 hrs for analysis	48 hours	J- for detected results
106MW2S-P2P-030718		O-phosphate	52 hrs for analysis	48 hours	
106064-P3R-080818	SW9056A	O-phosphate	192 hrs for analysis	48 hours	
106063-P3R-080818		O-phosphate	192 hrs for analysis	48 hours	R for non-detected results
106EX1-P3R-080818		O-phosphate	192 hrs for analysis	48 hours	
106EX2-P3R-080818		O-phosphate	192 hrs for analysis	48 hours	
106EX2-P3R-080818-FD		O-phosphate	192 hrs for analysis	48 hours	
106064-P3R-080818		Nitrate/Nitrite as N	192 hrs for analysis	48 hours	
106063-P3R-080818		Nitrate/Nitrite as N	192 hrs for analysis	48 hours	
106EX1-P3R-080818		Nitrate/Nitrite as N	192 hrs for analysis	48 hours	
106EX2-P3R-080818		Nitrate/Nitrite as N	192 hrs for analysis	48 hours	
106EX2-P3R-080818-FD		Nitrate/Nitrite as N	192 hrs for analysis	48 hours	
106064-P3R-080818	SW8260B	VOCs	15 days for analysis	14 day	J- for toluene
106EX1-P3R-080818		VOCs	15 days for analysis	14 day	J- for toluene
106EX2-P3R-080818		VOCs	15 days for analysis	14 day	J- for toluene
106EX2-P3R-080818-FD		VOCs	15 days for analysis	14 day	J- for toluene

Notes: Data qualification definitions are included in Table 2.
FD field duplicate.
VOC volatile organic compound.

The original bromide analysis for the 3 listed samples met the holding time requirement. The samples were re-analyzed due to non-compliant calibrations; however, the re-analysis was completed 4 days after the samples had expired. The results of bromide from the second analysis were similar to those results from the original analysis and were qualified as estimated (J-) due to the holding time exceedance.

Due to laboratory errors, the 14-day analysis holding time requirement was missed for 7 alkalinity samples collected during the June 2018 sampling event. Alkalinity was detected in the affected samples and the reported concentrations should be considered as estimated with a potential low bias (J-).

Two groundwater samples (106064-P2P-030718 and 106MW2S-P2P-030718) were collected for anions and o-phosphate analysis. Sample containers, preservatives and requested analyses are presented below:

Table 1.1.1b: Summary of Sample Identification Errors

Sample Number	Sample Container and Analysis		Sample Container and Analysis	
106064-P2P-030718	250 ml PE	Anions by EPA SW9056	250 ml PE	o-phosphate (field filtered) by SM4500 PE
106MW2S-P2P-030718	250 ml PE	Anions by EPA SW9056	250 ml PE	o-phosphate (field filtered) by SM4500 PE

Both anions and o-phosphate samples were collected in 250 mL PE containers. Samples for o-phosphate analysis were field filtered. Both anions and o-phosphate sample containers were clearly labeled and analysis was requested on the chain of custody form. Due to an analyst error, two o-phosphate samples (106064-P2P-030718 and 106MW2S-P2P-030718) from March 7, 2018 sample date were initially analyzed from the anions sample containers. After the error was identified, the laboratory re-analyzed the samples from the field filtered containers; however, the 48-hour analysis holding time was marginally missed by 4 hours. The results of o-phosphate in the two samples from the re-analysis were qualified as estimated (J-) due to the minor holding time outlier. The data usability of the qualified results is not affected.

The sample identification error was an isolated error. Every sample container was labeled with sample number, preservative, and requested analysis. All collected samples were documented on the sample collection logs and chains of custody forms. Sample containers in the coolers were checked against the chain of custody forms before shipping to the laboratories. Upon sample receipt, the laboratories checked the sample containers against the chain of custody forms and notified APTIM if discrepancies between the sample containers and chain of custody forms were identified. Discrepancies were resolved before the laboratories started analysis. Sample conditions were documented on the sample receipt form and included in the laboratory data packages (Appendix G-2). After analysis, department managers reviewed the data to verify that method requirements were followed and target analytes were correctly identified and quantified. Prior to data reporting, the laboratories performed internal QC review to ensure the accuracy and completeness of analytical results.

The five listed o-phosphate and nitrate and nitrite as nitrogen samples from August 8, 2018 sample date were shipped to Empirical and then re-directed to Test America after the primary laboratory Empirical went out of business. The o-phosphate and nitrate and nitrite as nitrogen samples were already expired when Test America in Savannah and West Sacramento received the samples. The o-phosphate and nitrate and nitrite as nitrogen samples were analyzed on the same day as the samples were received; however, the 48-hour analysis holding time requirement was missed by 6 days. O-phosphate in one sample (106064-P3P-081818) was detected and its reported result was qualified as estimated (J-). O-phosphate in the remaining four samples and nitrate and nitrite as nitrogen in all five samples were not detected. Because the degree of the holding time exceedance for the five samples was severe, the non-detected results were considered not usable and consequently rejected (R).

The original VOCs analysis for the above four samples was completed within the 14 day analysis holding time requirement. Because the concentrations of toluene in the samples exceeded the instrument upper calibration range, the affected samples were diluted until the results of toluene fell within in the instrument range. The re-analysis was completed in 15 days after the sample collection date exceeding the 14-day analysis holding time requirement by 1 day. The results of toluene in the four samples were reported from the diluted run and were qualified as estimated (J-) due to the holding time exceedance. As the degree of the holding time exceedance was minor, the qualified data is considered usable. Except for toluene, the results of the remaining VOC target analytes were reported from the original analysis that met the holding time requirement, and therefore no data qualification was applied to the remaining VOC results.

Except as discussed above, the analysis holding time requirements were achieved for all other samples and for all other methods.

1.1.2 Laboratory Method Blanks (Reason Code B1)

The field sample results were evaluated with respect to the laboratory method blank prepared and analyzed for each analytical batch, and for each analytical method. Positive analyte detections in a few laboratory method blanks were observed for EPA Method SW8260B and SM4500PE. Specific contaminants, the detected levels, and the limits of quantitation (LOQs) are summarized as follows:

Table 1.1.2: Summary of Laboratory Method Blank

Analytical Method	Lab Batch Number	Contaminant	Contaminant Level (mg/L)	LOQ (mg/L)	Data Qualification
SM4500 PE	7I17205	o-Phosphate	0.0205	0.04	U at the LOQ or reported concentration
	8A10010	o-Phosphate	0.0118	0.04	U at the LOQ or reported concentration

Note: Data qualification definitions are included in Table 2.
LOQ limit of quantitation.
mg/L milligram(s) per liter.

Based on the DoD QSM requirements (2017), laboratory method blank concentrations are considered acceptable when contaminant levels in the blank are less than one-half the LOQ for target analytes and less than the LOQ for common laboratory contaminants, such as acetone and methylene chloride. As indicated in the preceding table, the laboratory method blank levels for o-phosphate in both batches were below one-half the LOQ, and thus met the blank acceptance criteria.

As a result of the low-level laboratory method blank contamination, the detected results of o-phosphate in the affected samples were qualified as not detected (U) at the LOQ or reported value when the concentrations of o-phosphate in samples were less than or equal to 5 times the level observed in the associated laboratory method blank. This blank qualification has no impact on the data usability.

In addition to above, naphthalene, acetone, and methylene chloride were detected in several other laboratory method blanks. The associated sample results were not affected by the laboratory method blank detections as naphthalene, acetone, and methylene chloride in samples were either not detected or

their detected levels in samples were well above 5 times (or ten times for common laboratory contaminants such as acetone and methylene chloride) the concentrations reported in the associated laboratory method blanks.

Except where noted, no other target analytes were detected in any laboratory method blanks for all other analyses.

1.1.3 Initial and Continuing Calibration Blanks (Reason Code B2)

In addition to the laboratory method blanks for metals and anions analyses, initial and continuing calibration blank results were reviewed to ensure that the instrument was free of contamination prior to the analyses. The review indicated that all the initial and continuing calibration blanks were free of any target analytes.

1.1.4 Surrogate Recoveries (Reason Code S)

Surrogate standards are organic compounds added to field and laboratory QC samples for organic analysis to evaluate the matrix effect and method performance on an individual sample basis. Surrogates in samples were recovered either below the lower control limits or above the upper control limits for VOCs and EDB analyses. The affected sample numbers, surrogate recovery outliers, and surrogate acceptance criteria are presented in the table below:

Table 1.1.4a: Summary of Surrogate Recovery Exceedances

Analytical Method	Sample Number	Surrogate Recovery Outlier (%)	Control Limit (%)	Data Qualification
EPA SW 8260B	106064-BL-081617	Toluene-d8: 87%	89-112%	J- for detected results and UJ for non-detected results
	106MW1S-BL-091917	Toluene-d8: 85%	89-112%	J- for detected results and UJ for non-detected results
	106064-P3P-081818	Toluene-d8: 88%	89-112%	J- for detected results and UJ for non-detected results
	106064-P3R-081818	4-Bromofluorbenzene: 124%	85-114%	J+ for detected results
	106064-P3P-081818	1,2-Dichloroethane-d4: 79%	81-118%	J- for detected results and UJ for non-detected results

Analytical Method	Sample Number	Surrogate Recovery Outlier (%)	Control Limit (%)	Data Qualification
EPA SW 8260B	106063-P3P-081818	4-Bromofluorobenzene: 121%	85-114%	J+ for detected results
	106EX1-P3P-081818	4-Bromofluorobenzene: 131%	85-114%	J+ for detected results
	106EX2-P3P-081818	4-Bromofluorobenzene: 142%	85-114%	J+ for detected results
	106EX2-P3P-081818FD	4-Bromofluorobenzene: 147%	85-114%	J+ for detected results
	106064-P3P-082218	Toluene-d8: 113%	89-112%	J+ for detected results
	106064-P3P-082918	4-Bromofluorobenzene: 126%	85-114%	J+ for detected results
	106063-P3P-082918	4-Bromofluorobenzene: 127%	85-114%	J+ for detected results
	106EX1-P3P-082918	4-Bromofluorobenzene: 127%	85-114%	J+ for detected results
	106EX2-P3P-082918	4-Bromofluorobenzene: 141%	85-114%	J+ for detected results
EPA SW8011	106063-BL-071817	1,3-Dibromoproane: 44%	61-130%	J- for detected results and UJ for non-detected results
	106MW1I-BL-071817	1,3-Dibromoproane: 52%	61-130%	J- for detected results and UJ for non-detected results
	106MW2I-BL-072417	1,3-Dibromoproane: 52%	61-130%	J- for detected results and UJ for non-detected results
	106MW2I-BL-FD-072417	1,3-Dibromoproane: 50%	61-130%	J- for detected results and UJ for non-detected results
	106064-BL-081617	1,3-Dibromoproane: 315%	61-130%	J+ for detected results
	106064-BL-091917	1,3-Dibromoproane: 1280%	61-130%	J+ for detected results
	106MW2S-BL-091917	1,3-Dibromoproane: 1010%	61-130%	J+ for detected results
	106MW1S-BL-091917	1,3-Dibromoproane: 1360%	61-130%	J+ for detected results
	106IN-BL-092617	1,3-Dibromoproane: 463%	61-130%	J+ for detected results
	106EX1-BL092617	1,3-Dibromoproane: 417%	61-130%	J+ for detected results
	106EX2-BL-092617	1,3-Dibromoproane: 420%	61-130%	J+ for detected results
	106064-P2R-012518	1,3-Dibromoproane: 2350%	45-152%	J+ for detected results
	106063-P2R-012518	1,3-Dibromoproane: 195%	45-152%	J+ for detected results
	106EX1-P2R-012518	1,3-Dibromoproane: 2880%	45-152%	J+ for detected results
	106EX2-P2R-012518	1,3-Dibromoproane: 3820%	45-152%	J+ for detected results
	106MW2I-P2P-030618	1,3-Dibromoproane: 183%	45-152%	J+ for detected results
	106MW2I-P2P-030618-FD	1,3-Dibromoproane: 183%	45-152%	J+ for detected results
	106MW1I-P2P-030618	1,3-Dibromoproane: 1090%	45-152%	J+ for detected results
	106MW1S-P2P-030618	1,3-Dibromoproane: 2540%	45-152%	J+ for detected results
	106063-P2P-030618	1,3-Dibromoproane: 935%	45-152%	J+ for detected results
	106064-P2P-030718	1,3-Dibromoproane: 1040%	45-152%	J+ for detected results
	106MW2S-P2P-030718	1,3-Dibromoproane: 991%	45-152%	J+ for detected results
	106-EX1-P2P-030718	1,3-Dibromoproane: 1030%	45-152%	J+ for detected results
	106EX2-P2P-030718	1,3-Dibromoproane: 2590%	45-152%	J+ for detected results
	106064-P2P-041018	1,3-Dibromoproane: 774%	45-152%	J+ for detected results
	106063-P2P-041018	1,3-Dibromoproane: 815%	45-152%	J+ for detected results
	106MW1I-P2P-041018	1,3-Dibromoproane: 930%	45-152%	J+ for detected results
	106MW1S-P2P-041118	1,3-Dibromoproane: 830%	45-152%	J+ for detected results
	106MW2I-P2P-041118	1,3-Dibromoproane: 43%	45-152%	J- for detected results and UJ for non-detected results
	106EX1-P2P-041118	1,3-Dibromoproane: 840%	45-152%	J+ for detected results
	106EX2-P2P-041118	1,3-Dibromoproane: 40%	45-152%	J- for detected results and UJ for non-detected results
EPA SW8011	106MW2I-P3P-100218	Pentachloroethane: 165%	60-114%	J+ for detected results
	106064-P3P-100418	Pentachloroethane: 186%	60-114%	J+ for detected results

Note: Data qualification definitions are included in Table 2.
% percent.
FD field duplicate.
EPA U.S. Environmental Protection Agency.

As shown above, one or more surrogates in the listed VOC samples was recovered outside the control range while recoveries of the remaining surrogates in the same VOC samples met the accuracy

requirements. As a result of the low biased surrogate recoveries, the detected results and the LOQ for non-detected data in the entire sample were qualified as estimated (J-) and (UJ), respectively. Due to the high biased surrogate recoveries, the detected results in the listed VOC samples were qualified as estimated (J+); however, the high biased surrogate recoveries did not affect the data quality of the non-detected results in the same sample and did not lead to any data qualification of the non-detected data.

In Table 1.1.4- Summary of Surrogate Recovery Exceedances, the listed surrogate recovery exceedances were associated with the final EDB reported results.

Surrogate spiking is not a requirement for EPA Method SW8011 and therefore surrogate control limits are advisory and are based on laboratory in-house control limits. During the Second Quarter 2012, CB&I Federal Services (currently APTIM) requested that Empirical laboratory add a surrogate to the EDB samples analyzed by EPA Method SW8011 as an additional QC control. As requested, the laboratory spiked the field and QC samples with the surrogate 1,3-dibromopropane for the quarterly groundwater monitoring program and continued to use this surrogate for this EDB pilot test project.

As discussed in this report, elevated concentrations of EDB and/or other VOC compounds such as benzene, toluene, ethylbenzene, and xylenes were reported in the same groundwater samples with elevated surrogate recoveries. The elevated sample concentrations do indicate the presence of matrix interference with the surrogate 1,3-dibromopropane recovery in the EPA Method SW8011 analysis. For all affected analytical batches, the data review indicated the following:

- EDB in the associated LCS/LCSD analyses met the accuracy requirements for both columns;
- The surrogate 1,3-dibromopropane in the LCS/LCSD samples associated with the groundwater sample surrogate recovery exceedances, was recovered within the accuracy requirements for both columns; and

- The surrogate 1,3-dibromopropane in the laboratory method blanks associated with the groundwater sample surrogate recovery exceedances, was recovered within the accuracy control limits for both columns.

Multiple analytical batches (LCS/LCSD and method blanks) indicated that the analytical system was in control. The acceptable LCS/LCSD results, and acceptable LCS/LCSD and laboratory method blank surrogate recoveries in the blank water matrix also indicated a matrix interference introduced during sample analysis.

In addition, each groundwater sample was analyzed for EDB by two separate methods and by two different EDB quantitation techniques; EDB by EPA Method SW8011 and EDB by EPA Method SW8260B. When EDB was detected by both EPA Methods SW8011 and SW8260B, EDB results were generally comparable. The following table summarizes the results of EDB from both columns by EPA Method SW8011 and by EPA Method SW8260B, for samples with elevated surrogate recoveries.

Table 1.1.4b: Summary of EDB Results from EPA Methods 8011 and 8260B

Sample Number	EPA 8011 Surrogate % Recovery (1,3-Dibromopropane)	SW8260 (µg/L)	SW8011 (µg/L) column 1	SW8011 (µg/L) column 2
106064-BL-081617	315%	9.65	6.27	6.27
106064-BL-091917	1280%	148	143	130
106MW2S-BL-091917	1010%	106	84.9	78
106MW1S-BL-091917	1360%	415	432	427
106IN-BL-092617	463%	28.6	19	20.1
106EX1-BL-092617	417%	40.1	30.2	31.3
106EX2-BL-092617	420%	146	140	143
106064-P2R-012518	2350%	62.8	77.1	80.3
106063-P2R-012518	195%	<25 (DF at 50)*	2.47	2.44
Sample Number	EPA 8011 Surrogate % Recovery (1,3-Dibromopropane)	SW8260 (µg/L)	SW8011 (µg/L) column 1	SW8011 (µg/L) column 2
106EX2-P2R-012518	3820%	122	90.9	83.7
106MW2I-P2P-030618	183%	<5 (DF at 5)*	1.98	1.58
106MW2I-P2P-030618FD	183%	<5 (DF at 5)*	1.61	1.35
106MW1I-P2P-030618	1090%	16.9	22.9	21.7
106MW1S-P2P-030618	2540%	128	92.5	75.4
106063-P2P-030618	935%	<25 (DF at 50)*	4.4	4.4
106064-P2P-030718	1040%	<100 (DF at 200)*	26.8	25.5
106MW2S-P2P-030718	991%	<50 (DF at 100)*	8.25	7.87
106EX1-P2P-030718	1030%	<50 (DF at 100)*	13.7	12.5
106EX2-P2P-030718	2590%	116	94.8	75.2
106064-P2P-041018	774%	<50 (DF at 100)*	11.1	12.6

106063-P2P-041018	815%	<25 (DF at 50)*	3.4	3.78
106MW1I-P2P-041018	930%	9.78	15.1	16.2
106MW1S-P2P-041118	830%	62.9	76.4	85.5
106EX1-P2P-041118	840%	<50 (DF at 100)*	3.45	3.74
106064-P3P-100418	186%	<44 (DF at 100)*	0.32	0.27

*EDB in the VOC analysis by SW8260B was not detected at the limit of detection. VOC samples were analyzed at the listed dilution factor due to elevated concentrations of VOC target analytes in the samples.
DF: dilution factor

Empirical was the primary laboratory supporting the Kirtland AFB quarterly groundwater monitoring project and the EDB pilot test project. During the pilot test, APTIM had ongoing communications with the laboratory. When there was a QC issue or data concern with the EDB analysis by EPA Method SW8011, APTIM requested that the laboratory investigate the issues and take corrective actions, as summarized below:

- Review sample preparation logs to verify if there were spiking errors and if there were dilution errors;
- Review instrument raw data and chromatograms to verify if EDB sample results and associated QC results were calculated correctly and adjusted for the dilution factor;
- Re-prepare and re-analyze the affected samples (if there was sufficient sample) to verify the QC exceedance

APTIM re-reviewed the laboratory case narrative. As stated in the case narrative, the concentrations of EDB were high and exceeding the instrument linear range. The affected samples were analyzed at multiple dilutions. The surrogate recoveries in the diluted analysis exceeded the acceptance criteria. APTIM also re-calculated surrogate recoveries to verify the reported recoveries. The re-calculated surrogate recoveries matched the reported values.

The National Functional Guidelines for Superfund Organic Methods Data Review (EPA, January 2017), the EPA provides the following data qualification guidelines when surrogates are recovered outside the control criteria:

- *If the surrogate recovery% is greater than the upper acceptance limit, qualify detects as estimated high (J+). Non-detects should not be qualified.*

In the DoD QSM (Version 5.1.1, 2018) Appendix B-1 for organic analysis by gas chromatography, the DoD provides the following flagging criteria when surrogates are recovered outside the control:

- *Apply Q-fag to all associated analytes if acceptance criteria are not met and explain in the case narrative*.

The *National Functional Guidelines for Superfund Organic Methods Data Review* (EPA, January 2017), the EPA further recommends that we evaluate other QC information when assessing overall data quality and usability. As discussed in the data quality evaluation report, all other QC elements associated with the EDB samples in question met the acceptance criteria. Other QC elements that met the QC requirements included the following:

<u>EDB analysis by EPA Method SW8011:</u>

- Sample preservation
- Analysis holding time
- Laboratory method blanks; and surrogate recoveries for both columns in the laboratory method blanks
- LCS/LCSD recoveries; and surrogate recoveries for both columns in the LCS/LCSD samples
- Precision results between the primary column and secondary column

Based on a combination of indicators discussed above, the qualified EDB results by EPA Method SW8011 are considered estimated with a high bias (J+) and are usable for project decisions. The concentrations of EDB in two samples (106MW2S-BL-080717 and 106MW1S-P2R-011818) exceeded the instrument's upper calibration limit and were qualified as estimated (J, reason code E). Since the

affected samples were already expired when the issue was discovered, no dilutions were performed to quantify the concentrations of EDB within the instrument range. There is no impact on the data usability because of this data quality issue.

EDB by EPA Method SW8011 is identified and quantified by a dual-column gas chromatography technique. As required by the DoD QSM (2017) and site-specific QAPjP (USACE 2011), the accuracy of the EDB analysis is demonstrated through spiking surrogates into samples. Recoveries of surrogates from both the primary and secondary columns were reviewed to verify the accuracy of the analysis. The review indicated that the surrogate 1,3-dibromopropane from the secondary column in several EDB samples analyzed by EPA Method SW8011 was recovered outside the accuracy control criteria; however, the surrogate 1,3-dibromopropane from the primary column in the same EDB samples was recovered within the control criteria. Since the EDB results in the affected samples were reported from the compliant column with acceptable surrogate recovery data, the data quality of the EDB results from the compliant column was not affected, and no data qualification was warranted.

Except where noted above, surrogates in all other VOC and EDB samples were recovered with the acceptance criteria.

1.1.5 Laboratory Control Sample/Laboratory Control Sample Duplicate Recoveries and Precisions (Reason Codes L, D3, and D1)

The LCS is an aliquot of analyte-free matrix spiked with target analytes that is prepared with each analytical batch for each analytical method. The recovery of target analytes from the LCS analysis is a measurement of method performance in an interference-free sample matrix. Non-compliant LCS biases were reported for EPA Methods SW8260B, SW9056A and SW6010C as presented below:

Table 1.1.5: Summary of LCS Recovery Exceedances

Analytical Method	Laboratory Batch Number	LCS Recovery Outlier (%)	Control Limit (%)	Data Qualification
EPA SW8260B	680-549803	Naphthalene: 153/147%	61-128%	J+ for detected results
EPA SW9056A	8A24009	Sulfate: 120%	87-112%	J+ for detected results
EPA SW6010C	8A31003	Iron: 85%	87-115%	J- for detected results and UJ for non-detected results
	8A31003	Manganese: 81%	90-114%	J- for detected results and UJ for non-detected results
	8D17017	Manganese: 118%	90-114%	J+ for detected results

Note: Data qualification definitions are included in Table 2.
% percent.
EPA U.S. Environmental Protection Agency.
LCS laboratory control sample.

As presented above, naphthalene, sulfate, and manganese (batch 8D17017) in the LCS analysis were recovered higher than their respective upper control limits. The LCS recovery outliers led to qualification of the detected results as estimated (J+); however, the high biased recoveries did not affect the non-detected data. Low biased LCS recoveries were also observed for iron and manganese (batch 8A31003). As a result of the low biased LCS recoveries, the detected results and LOQ for non-detected data were qualified as estimated (J-) and (UJ), respectively. This qualification was applied to the results of the listed analytes in all samples in the non-compliant batch. As shown above, the reported LCS recovery outliers were minor and thus the data usability of the qualified results is not affected.

The LCS results meet the acceptance criteria for all other analyses.

In addition to the LCS analysis, the laboratory performed a sample duplicate analysis on project-specific groundwater samples to assess precisions of sample results. The laboratory duplicate analysis was performed on samples submitted for anions and metals analyses. Acceptable precisions results were reported for both analyses.

1.1.6 Matrix Spike/Matrix Spike Duplicate Recoveries and Precisions (Reason Codes M and D2)

The MS and MSD samples are a portion of a field sample spiked with target analytes that are prepared with each analytical batch and with each method. The MS/MSD results are used to evaluate any bias introduced to the method due to matrix interference, and to measure bias and precision for each analytical batch.

In accordance with the site-specific QAPjP requirements (USACE, 2011), the MS/MSD samples are to be collected at a rate of 1 per 20 groundwater samples or 5 percent (%). During each sampling event, one MS/MSD sample was collected from a Pilot Test well thus achieving the 5% MS/MSD sample frequency requirement. MS/MSD samples were analyzed for VOCs, EDB, dissolved metals, dissolved gases, VFAs, and wet chemistry parameters to verify the presence of a matrix effect and its potential impact on the precision and bias of the analytical results.

The majority of the MS results meet the established bias and precision requirements; however, MS recoveries and/or precision outliers were observed for VFAs, dissolved gases, wet chemistry parameters, and VOC analyses, which are summarized as follows:

Table: 1.1.6: Summary of MS Recovery or Precision Exceedances

Analytical Method	Spiked Sample	MS Recovery or Precision Outlier (%)	Control Limit (%)	Data Qualification
EPA 300.0M	106MW2I-P2R-010918	Lactic acid: 76/65%, RPD: 15.5%	66-130%, RPD: 9.9%	J for detected results
	106MW2I-P2R-010918	Acetic acid: RPD: 17.1%	RPD: 16.1%	J for detected results
	106MW2I-P2R-010918	Propionic acid RPD: 14.7%	RPD: 12.6%	J for detected results
	106IN1-P2R-011018	Lactic acid: RPD: 11.3%	RPD: 9.9%	J for detected results
	106IN1-P2R-012418	Lactic acid: RPD: 11%	RPD: 9.9%	J for detected results
	1061N1-P2P-061418	Lactic acid: RPD: 33.4%	RPD: 9.9%	J for detected results
	1061N1-P2P-061418	Acetic acid: RPD: 36.7%	RPD: 16.1%	J for detected results
	1061N1-P2P-061418	Propionic acid RPD: 35.2%	RPD: 12.6%	J for detected results
	1061N1-P2P-061418	Formic acid RPD: 39.8%	RPD: 14.6%	J for detected results
	1061N1-P2P-061418	Pyruvic acid RPD: 40.6%	RPD: 20.8%	J for detected results
	1061N1-P2P-061418	Valeric acid RPD: 21%	RPD: 17.2%	J for detected results
EPA 300.0	106IN1-P2P-010218	Iodide: 142%	90-110%	J+ for detected results

Analytical Method	Spiked Sample	MS Recovery or Precision Outlier (%)	Control Limit (%)	Data Qualification
	106064-P2P-041018	Iodide: 84%	90-110%	J- for detected results and UJ for non-detected results
	106064-P3P-111418	Iodide: 115%	90-110%	J+ for detected results
	106MW1S-P4P-011619	Iodide: 116%	90-110%	J+ for detected results
RSK 175	106063-P2R-012518	Methane: 109/126%	80-120%	J+ for detected results
EPA SW 9056A	106063-P1P-102417	Bromide: 84/84%	91-110%	J- for detected results and UJ for non-detected results
	106EX1-P2R-011018	Bromide: 82/88%	91-110%	J- for detected results and UJ for non-detected results
	106MW2S-P2R-011618	Chloride: 114/113%	87-111%	J+ for detected results
	106MW2I-P2R-011818	Chloride: 115/115%	87-111%	J+ for detected results
	106MW2I-P2P-012518	Bromide: 86/87%	91-110%	J- for detected results and UJ for non-detected results
	106063-P2P-041018	Bromide: 83/84%	91-110%	J- for detected results and UJ for non-detected results
	106MW1I-P2P-050818	Bromide: 88/89%	91-110%	J- for detected results and UJ for non-detected results
	106064-P2P-050818	Bromide: 88/88%	91-110%	J- for detected results and UJ for non-detected results
	106064-P2P-091218	Nitrate/Nitrite as N: 72/72%	88-111%	J- for detected results and UJ for non-detected results
	106064-P2P-091218	Bromide: 136/139%	91-110%	J+ for detected results
	106064-P2P-091218	Sulfate: 123/127%	87-112%	J+ for detected results
	106MW2I-P3P-100218	O-Phosphate: 34%	80-116%	J- for detected results and UJ for non-detected results
	106MW1I-P3P-100318	O-Phosphate: 69/69%	80-116%	J- for detected results and UJ for non-detected results
	106063-P3P-111518	O-Phosphate: 40/43%	80-116%	J- for detected results and UJ for non-detected results
	106IN1-P3P-111918	O-Phosphate: 65/60%	80-116%	J- for detected results and UJ for non-detected results
	106064-P4P-011619-FD	Nitrate/Nitrite as N: 79/78%	88-111%	J- for detected results and UJ for non-detected results
EPA SW 9056A	106063-P4P-011719	O-phosphate: 63/60%	80-116&	J- for detected results and UJ for non-detected results
	106063-P4P-011719	Nitrate/Nitrite as N: 86/81%	88-111%	J- for detected results and UJ for non-detected results
	106EX1-P4P-012119	O-phosphate: 54/55%	80-116&	J- for detected results and UJ for non-detected results
	106EX2-P4P-012119	Nitrate/Nitrite as N: 87/87%	88-111%	J- for detected results and UJ for non-detected results
EPA SW6010C	106064-BL-081617	Iron: 67/72%	87-115%	J- for detected results and UJ for non-detected results
	106064-BL-081617	Manganese: 60/69%	90-114%	J- for detected results and UJ for non-detected results
	106MW1I-BL-091817	Iron: 78/72%	87-115%	J- for detected results and UJ for non-detected results
	106MW1I-BL-091817	Manganese: 80/80%	90-114%	J- for detected results and UJ for non-detected results
	106MW2S-P2R-010918	Iron: 86/88%	87-115%	J- for detected results and UJ for non-detected results
	106EX1-P3P-111918	Manganese: 173/114%	90-114%	J+ for detected results
SM2320	106MW2S-BL-080717	Alkalinity: 73/74%	75-125%	J- for detected results and UJ for non-detected results
	106MW2S-P2R-010918	Alkalinity: 59/60%	75-125%	J- for detected results and UJ for non-detected results
	106EX1-P2R-011018	Alkalinity: 58/60%	75-125%	J- for detected results and UJ for non-detected results

Analytical Method	Spiked Sample	MS Recovery or Precision Outlier (%)	Control Limit (%)	Data Qualification
SM2320	106MW1I-P2P-050818	Alkalinity: 62/71%	75-125%	J- for detected results and UJ for non-detected results
EPA SW8260B	106IN1-P2P-041118	Toluene: 66/55%	80-121%	J- for detected results and UJ for non-detected results
	106IN1-P2P-041118	Xylenes: 90/77%	79-121%	J- for detected results and UJ for non-detected results
	106MW2S-P2P-050918	Ethylbenzene: 77/73%	79-121%	J- for detected results and UJ for non-detected results
	106MW2S-P2P-050918	Xylenes: 67/59%	79-121%	J- for detected results and UJ for non-detected results

Note: Data qualification definitions are included in Table 2.
% percent.
EPA U.S. Environmental Protection Agency.
MS matrix spike.
RPD relative percent difference.

As a result of the MS recoveries and precisions outliers, the detected results and the LOQ for non-detected results were qualified as estimated. This data qualification was applied to the results of the listed analytes in all samples in the batch. With the exceptions of o-phosphate in 3 spiked samples (106MW2I-P3P-100218, 106063-P3P-111518, and 106EX1-P4P-012119), the reported MS and MSD recoveries did not significantly deviate from the lower or upper control criteria, and thus the data usability of the qualified data is not affected. The LCS results associated with the non-complaint batches met the bias and precision control criteria, which demonstrated that acceptable batch bias and precision were achieved for VFAs, dissolved gases, anions, alkalinity, metals, and VOC analyses.

In addition to above, the reported MS recoveries were outside the accuracy specifications for dissolved iron and manganese, EDB and VOCs in a few spiked samples. These non-compliant MS results could be attributed to a matrix effect. In the spiked samples, the parent concentrations of metals, EDB, and VOCs exceeded four times their respective spiked levels. These elevated sample concentrations produced matrix interference, which affected the accuracy of the MS analysis. Because the sample concentrations were greater than four times the spiked levels, no data qualification was applied to the results of the metals, EDB, and VOCs.

Except as noted, the MS precision and bias results are acceptable for all other analyses.

1.1.7 Initial Calibration (Reason Code G)

Instrument calibration is performed for VOC, EDB, dissolved gases, VFAs, metals, and anions analyses according to the EPA method requirements (EPA, 1996). The linear analytical range is established for each method by analysis of calibration standards prepared at increasing concentrations that cover the expected sample concentrations. The acceptability of the initial calibration is determined by calculation of a percent relative standard deviation or coefficient. The initial calibration results were acceptable for all the listed analyses.

Immediately after the initial calibration for each analysis, ICV was conducted at the mid-point of instrument calibration range by using a second-source calibration standard to verify the accuracy of the initial calibration. The review indicated acceptable ICV results for all target analytes.

1.1.8 Continuing Calibration Verification (Reason Code C)

Routinely during sample analysis, the stability of the analytical system is monitored by analysis of continuing calibration standards at concentrations near the mid-point of the instrument calibration range. The percent difference (%D) values between the relative response factor in the initial calibration and the relative response factor in the continuing calibration exceeded the acceptance criteria for VOC, EDB, metals, and anions analyses. The CCV outliers that resulted in data qualification are summarized as follows:

Table 1.1.8: Summary of Continuing Calibration Verification Exceedances

Analytical Method	Calibration ID	CCV Outlier, D (%)	Control Limit (%)	Data Qualification
EPA SW8260B	7G18602	Isopropylbenzene: 20.5	<20%	J+ for detected results
	7G18602	Naphthalene: 24.6	<20%	J+ for detected results
	7H22101-CC11	Naphthalene: 26.3%	<20%	J+ for detected results
	7i26801-CCV1	2-Butanone: -20.8%	<20%	J- for detected results and UJ for non-detected results

Analytical Method	Calibration ID	CCV Outlier, D (%)	Control Limit (%)	Data Qualification
	7i26801-CCV1	2-Hexahnoe: -24.9%	<20%	J- for detected results and UJ for non-detected results
	7i26801-CCV1	4-Methyl-2-Pentanone: -20.6%	<20%	J- for detected results and UJ for non-detected results
	7H22101-CC11	Acetone: 28.3%	<20%	J+ for detected results
	7K33101	Acetone: -22.7%	<20%	J- for detected results and UJ for non-detected results
	8C06802-CCV1	Acetone: 31	<20%	J+ for detected results
	8C06802-CCV1	2-Butanone: 26.9%	<20%	J+ for detected results
	8C06802-CCV1	2-hexanone: 37%	<20%	J+ for detected results
	8C07201-CCV1	2-Hexanone: 24.2%	<20%	J+ for detected results
EPA SW8011	7I26314	EDB: -20.1%	<20%	J- for detected results and UJ for non-detected results
	680-555834	EDB: -23.3%	<20%	J- for detected results and UJ for non-detected results
EPA SW6010C	8D10706-CCV1	Iron: 89.9%	90-110%	J- for detected results and UJ for non-detected results
SM4500 PE	7I27105-CCV1	O-phosphate: 111%	90-110%	J+ for detected results
EPA SW9056A	8A01909-CCV2	Sulfate: 112%	90-110%	J+ for detected results
	8A024010-CCV1	Sulfate: 117%	90-110%	J+ for detected results

Note: Data qualification definitions are included in Table 2.
% percent.
CCV continuing calibration verification.
EPA U.S. Environmental Protection Agency.
ID identification.

As a result of the low biased %D values, the detected results and the LOQs for the non-detected analytes were qualified as estimated (J-) and (UJ), respectively. The high biased %D values led to qualification of detected results as estimated (J+), but did not affect the non-detected data. This data qualification was applied to the results of the listed analytes in all samples associated with the non-compliant CCVs. In all cases, the degree of the CCV outliers was minor and did not affect the data usability.

1.1.9 Interference Check Samples (Reason Code O)

The ICS verifies the inter-element and background correction factors. An ICS was analyzed at the required frequencies, and all ICS results were within the established control limit for EPA Method SW6010C for the Pilot Test groundwater sampling events.

1.1.10 ICP Serial Dilutions (Reason Code A)

The ICP serial dilution determines whether significant physical or chemical interferences exist due to sample matrix. When the concentration of an analyte exceeds 50 times the method detection limit, an ICP

serial dilution is performed at a five-fold dilution and the results between the original analysis and the diluted analysis are compared. The results of the ICP serial dilution are deemed acceptable when a %D between the original analysis and the diluted analysis is less than or equal to 10%. An ICP serial dilution was performed on groundwater samples collected during the Pilot Test groundwater sampling period. ICP serial dilution results that exceed the 10% accuracy goal are presented below:

Table 1.1.10: Summary of ICP Serial Dilution Exceedances

Analytical Method	Sample Number	ICP Serial Dilution Outlier (%)	Control Limit (%)	Data Qualification
EPA SW6010C	106064-BL-081617	Iron: 22%	10%	J for detected results
	106064-P2P-041018	Iron: 14.1%	10%	J for detected results

Note: Data qualification definitions are included in Table 2.
% percent.
EPA U.S. Environmental Protection Agency.
ICP inductively coupled plasma.

The results of iron in the affected samples were qualified as estimated (J) as a result of the non-compliant ICP serial dilution. The data usability of the qualified results is not affected. The ICP serial dilution results met the accuracy goal for all other samples and for all other metals.

1.1.11 Sample Confirmation (Reason Code D)

As required by the DoD and EPA, when samples are analyzed by either a gas chromatography or high-performance liquid chromatography method, all positive results, with the exception of total petroleum hydrocarbons as gasoline and diesel, must be confirmed by a second column or a different detector. As indicated in all SDGs for the entire Pilot Test sampling period, all positive EDB results analyzed by EPA Method SW8011 were confirmed by a second column, and the precision results between the primary and secondary columns were within the precision control limit for all the detected samples with the following exceptions:

Table 1.1.11: Summary of EDB Precision Exceedances

Analytical Method	Sample Number	Precision Outlier (%)	Control Limit (%)	Data Qualification
EPA SW8011	106MW2S-P2P-050918	RPD: 50%	<40%	J for detected results
	106064-P3P-111418	RPD: 106%	<40%	J for detected results
	106MW2S-P3P-111518	RPD: 83%	<40%	J for detected results
	106IN1-P3P-111918	RPD: 67%	<40%	J for detected results

Note: Data qualification definitions are included in Table 2.
% percent.
EPA U.S. Environmental Protection Agency.
RPD relative percent difference.

As indicated above, the reported precisions for the listed samples exceeded the acceptable precision control limit of less than or equal to 40%. As a result of the non-compliant precisions, the detected EDB results in the affected samples were qualified as estimated (J). In the listed samples, the reported EDB concentrations were low and slightly below the LOQ. Precision cannot be accurately measured as sample results are approaching the LOQ. There is no impact on the data usability because of this data quality outlier. It should be noted that the LCSD RPD associated with the listed EDB samples met the precision requirement, thus indicating acceptable laboratory batch precision. It should be also noted that both the EPA Method SW8011 and DoD QSM (2017) do not require laboratory corrective actions due to the non-compliant precision results between the two columns.

The analyte EDB was analyzed for all groundwater samples by both EPA Methods SW8011 and SW8260B. During the data review, the EDB results for the analysis by EPA Method SW8011 were also compared with the EDB results analyzed by EPA Method SW8260B. In cases where the analyte was detected by both EPA Methods SW8011 and SW8260B, the detected EDB results between the two methods were generally comparable and in agreement.

1.1.12 Trip Blanks (Reason Code K3)

Trip blanks were prepared by the laboratory and stored with the groundwater samples collected for VOCs analysis. In accordance with the site-specific QAPjP requirements (USACE, 2011), one trip blank is to be collected at a rate of one per cooler when sampling groundwater samples for VOC analysis.

During each sampling event, one trip blank per cooler was submitted with VOC samples collected on each day, achieving the trip blank collection frequency requirement. Appendix G-1 – Table 4 summarizes the detected trip blank results and associated sample results. Positive results in the trip blank are presented as follows:

Table 1.1.12: Summary of Trip Blank Detections

Analytical Method	Trip Blank	Contaminants	Detected Level (µg/L)	LOQ (µg/L)
EPA SW8260B	TB-081617	Acetone	2.53	10
	TB-091817	Carbon disulfide	0.279	1
	TB-091917	Carbon disulfide	0.256	1
	TB-092617	Carbon disulfide	0.289	1
	TB-102517	Acetone	3.27	10
	TB-111617	Acetone	4.17	10

Note: Data qualification definitions are included in Table 2.
µg/L microgram(s) per liter.
EPA U.S. Environmental Protection Agency.
LOQ limit of quantitation.

The detected result for acetone in one groundwater sample associated with the trip blank (TB-081617) was qualified as non-detected (U) at the LOQ due to low-level trip blank detection. Acetone and carbon disulfide in groundwater samples shipped with the remaining listed trip blanks were not detected or their detected levels far exceeded 5 times (or 10 times for common laboratory contaminant such as acetone) the levels observed in the trip blanks, and thus the trip blank detections did not affect the sample results and did not lead to any data qualification of any sample results. Except where noted above, the remaining trip blanks were free of VOCs. Overall, the trip blank results were acceptable and demonstrated that valid sample storage and shipping procedures were being implemented.

1.1.13 Equipment Rinse Blanks (Reason Code K1)

Equipment rinse blanks are designed to check for contamination from sampling equipment, and the results for the equipment rinse blanks are used to evaluate the efficiency of equipment decontamination procedures.

In accordance with the site-specific QAPjP requirements (USACE, 2011), no equipment rinse blanks will be collected when dedicated or disposable sampling equipment is used to collect groundwater samples. When non-dedicated or non-disposable sampling equipment is used, one equipment rinse blank will be collected at a rate of one per day. During the Pilot Test groundwater sampling events, dedicated sampling equipment was used to collect the majority of the groundwater samples. A stainless steel bailer was used to collect samples from the injection well (KAFB-106IN1) in October, November, and January 2019. As no cross-contamination between wells or samples could occur, no equipment rinse blanks were necessary in these cases.

1.1.14 Field Duplicates

In accordance with the site-specific QAPjP requirements (USACE, 2011) and Pilot Test Work Plan, field duplicate samples are to be collected at a minimum rate of 10% of the total number of groundwater samples. Field duplicate samples are evaluated by calculating the RPD between the parent sample and its duplicate. The RPD is calculated using the following equation:

$$RPD = /(S-D)/[(S+D)/2]/ \times 100$$

Where:

S = sample result
D = duplicate result

Acceptable precision control criteria are established at less than or equal to 35% for water samples. The RPD is calculated between pairs of field duplicate samples when both results are reported at or above the LOQ.

During each sampling event, one duplicate pair was collected from a Pilot Test well, thereby achieving the 10% of the field duplicate frequency requirement. All duplicate pairs were analyzed for VOCs, EDB, dissolved gases, VFAs, dissolved metals, and wet chemistry parameters. In addition, groundwater

samples from the selected sampling events were analyzed for tracers (hydrogen stable isotope and fluorescein dye). Field duplicates were not collected for QuantArray-Chlor or EDB stable isotope analysis.

Appendix G-1 – Table 5 presents the field duplicate results for the entire Pilot Test groundwater monitoring period. As presented on the table, field duplicate results of VOCs, EDB, VFAs, and wet chemistry parameters in one or more wells exceeded the field precision goal, which are summarized below:

<u>EPA Method SW8260B</u>

- Toluene: 69.71% (106MW2I-BL-091917)
- Trichloroethene: 96.3% (106MW2I-P3P-111518)

<u>EPA Method SW8011</u>

- EDB: 51.55% (106MW2I-BL-091917)
- EDB: 52.38% (106064-P2P-050918)

<u>EPA Method SW9056A</u>

- O-phosphate:129.1% (106064-P2P-061418)
- Bromide: 35.29% (106064-P4P-011619)

<u>EPA Method 300.0M</u>

- Acetic acids: 64.74% and propionic acids: 73.86% (106EX2-P2P-011018)
- Acetic acids: 45.87% and lactic acid: 48.34% (106MW2I-P2P-030618)
- Valeric acid: 70.59% (106MW2S-P2P-041018)

Except where noted above, the majority of the field duplicate results met the precision goal. The field duplicate results demonstrate acceptable overall field sampling and analytical precision for all methods.

1.2 Completeness

The following sections present a discussion of contractual, analytical, technical, and holding time completeness for the Pilot Test groundwater monitoring events. Completeness calculations were performed only for the groundwater samples that are used for project decisions. Completeness results are presented in Appendix G-1 – Table 6.

1.2.1 Contractual Completeness

Contractual completeness is a quantitative determination of the number of unqualified results compared to the total number of sample results expressed as a percentage, based on data qualified for QC outliers related to method performance. These include data qualified for calibration or preparation blank contamination, missed holding times, and non-compliant LCS recovery and/or precision. The contractual completeness goal for each method is 95%. Contractual completeness is calculated as follows:

$$\% \text{ Contractual Completeness} = \frac{\text{Number of Unqualified Results}}{\text{Total Number of Results}} \times 100$$

With the exceptions listed below, the 95% analytical completeness objective was achieved for all the methods for the Pilot Test groundwater monitoring events.

- O-Phosphate by SM Method 4500PE – 93.1%
- Dissolved metals by EPA Method SW6010C – 92.5%

Largely due to low-level laboratory method blank contamination for o-phosphate and non-compliant LCS recoveries for dissolved metals, the 95% contractual completeness goal was not achieved for the above two methods. The affected results were qualified as estimated or non-detetected, the data usability however is not affected.

1.2.2 Analytical Completeness

Analytical completeness is a quantitative measure of the number of unqualified data results compared to the total number of results expressed as a percentage, based on the target analytes qualified for missed holding times and exceedances of QC requirements based on calibration, LCS, MS/MSD, surrogate, method precision, and laboratory method blank contamination results. The analytical completeness goal for each method is 90% for the project. Analytical completeness is calculated as follows:

$$\% \text{ Analytical Completeness} = \frac{\text{Number of Unqualified Results}}{\text{Total Number of Results}} \times 100$$

The 90% analytical completeness objective was met for the majority of the analyses. Exceptions are summarized below:

- Dissolved metals by EPA Method SW6010C – 88.4%
- EDB by EPA Method SW8011– 77.4%

While the results of dissolved metals and EDB in some samples were qualified as estimated due to QC outliers discussed in the previous sections, the data usability of the qualified data is not affected. Qualified data are still usable to achieve the project data quality objectives.

1.2.3 Technical Completeness

Technical completeness is a quantitative measure of the data usability based on the number of rejected data compared to the total number of sample results. The technical completeness goal for each method is equal to or greater than 95%. The technical completeness calculation considers all data that are not rejected to be usable. The technical completeness is calculated as follows:

$$\% \text{ Technical Completeness} = \frac{\text{Number of Usable Results}}{\text{Total Number of Results}} \times 100$$

As discussed in the previous section, the non-detected results were not usable and rejected for nitrate and nitrite as nitrogen in five samples and o-phosphate in four samples due to the holding time exceedances. The technical completeness for EPA Method SW9056A was 98.8% and 100% for all other methods exceeding the 95% technical completeness objective. Therefore, the project data quality objectives were achieved for all methods for the Pilot Test groundwater monitoring events.

1.2.4 Holding Time Completeness

Holding time completeness is defined as the ratio of the number of samples analyzed within the analysis holding time to the total number of samples collected. The holding time completeness goal for each method is 100%. For the Pilot Test groundwater monitoring events, the holding time completeness was 100% for all methods with the following exceptions:

- Alkalinity by SM 2320B – 96.2%
- O-phosphate by SM 4500 PE – 98.3%
- VOCs by EPA Method SW8260B – 99.9%
- Anions by EPA Method 9056A – 98.3%

As discussed in the previous sections, alkalinity in 7 samples, bromide in 3 samples, o-phosphate in 7 samples, nitrate and nitrite as nitrogen in 5 samples, and toluene in 4 VOC samples were analyzed outside their respective holding time requirements. The results of alkalinity, bromide and toluene in the affected samples were qualified as estimated, the data usability of these qualified results however is not affected. While the non-detected results for o-phosphate in 4 samples and nitrate and nitrite as nitrogen in 5

samples were rejected, the technical completeness for EPA Method 9056A was 98.3% and met the 95% technical completeness objective.

1.3 Analysis Completeness

As a part of the data review process, APTIM reviewed chain-of-custody forms against the laboratory data packages and electronic data deliverables to ensure that analytical results were reported for all the requested methods and samples. On August 7, 2018, four groundwater samples were collected from wells KAFB-106MW1-I, KAFB-106MW2-I, KAFB-106MW1-S, and KAFB-106MW2-S and shipped to Empirical laboratory for VOCs, EDB, dissolved metals, and anions analyses. Due to Empirical laboratory closure, these four samples were not recovered from the laboratory and were not analyzed and reported from either Empirical or Test America. The listed four wells were re-sampled for VOCs, EDB, dissolved metals and anions on August 15, 2018 and were analyzed and reported by Test America. With the exception of the four samples from August 7, 2018, the review indicated that analytical results were reported for all methods and for all samples as planned.

1.4 Representativeness and Comparability

During sampling, samplers followed the approved Pilot Test Work Plan, site-specific QAPjP requirements (USACE, 2011) and established sampling SOPs to collect, preserve, document, and ship samples to off-site laboratories, thus ensuring the representativeness of the groundwater samples collected for the Pilot Test groundwater monitoring period.

From each groundwater monitoring well, VOC samples were collected in three 40-milliliter (mL) volatile organic analysis (VOA) vials preserved with hydrochloric acid, and EDB samples by EPA Method SW8011 were stored in three 40-mL VOA vials preserved with ice only. Upon sample receipt, the laboratory reviewed sample conditions to ensure that sample containers, preservatives (when applicable), and requested analyses matched the chain-of-custody requirements. The laboratory also reviewed VOA

vials to verify the presence or absence of any headspace. As documented on the laboratory case narratives and sample receipt forms, a pea-size headspace was present in a few VOC and EDB samples. Following EPA guidance and laboratory SOP requirements, the laboratory selected available vials without any headspace for the requested analysis to ensure that the reported data were representative. As the VOA vial selected for the analysis was bubbles free, there is no impact on the data quality and usability.

The primary laboratories Empirical and Test America in Savannah, West Sacramento, and Earth City are DoD Environmental Laboratory Accreditation Program-certified and adhered to the most current EPA Method and SM requirements, site-specific QAPjP (USACE, 2011), and DoD QSM (2017) requirements to prepare, analyze, and report the data. This ensures the comparability of the analytical results between different samples and different sampling events. An EPA Level III data review was performed on 100% of the samples submitted for VOCs, EDB, dissolved metals, dissolved gases, VFAs, and wet chemistry analyses to verify that the laboratories complied with the DoD QSM, site-specific QAPjP, and method requirements. Limited data review was also performed for the results of QuantArray-Chlor, fluorescein dye, hydrogen and EDB stable isotope. Analytical results that were outside the established QC requirements were qualified and the data quality and usability were discussed in the previous sections. Based on a review of the completed sample collection logs, chain-of-custody forms, sample receipt forms, and laboratory data packages, the analytical results reported for the Pilot Test groundwater monitoring events have met the comparability requirements.

1.5 Summary

The analytical data reported for the Pilot Test groundwater monitoring events have been reviewed for precision, bias, representativeness, comparability, and completeness. Data quality exceedances consisted of holding time outliers, biased surrogate, LCS, and MS/MSD recoveries and precisions, non-compliant precisions between primary and secondary columns, CCV and ICP serial dilution outliers, and low-level laboratory and field blank contamination. The affected data were qualified as estimated or not detected.

With the exception of holding time violations for four o-phosphate samples and five nitrate and nitrite as nitrogen samples, the degree of these data quality exceedances was considered minor, and the data usability was not affected. As a result of the holding time violations, the non-detected results for o-phosphate in four samples and nitrate and nitrite as nitrogen in five samples were rejected and not usable. The 95% technical completeness goal was exceeded for all methods for the Pilot Test groundwater monitoring events. All data are usable for their intended purposes.

REFERENCES

American Public Health Association, American Water Works Association, and Water Environment Federation. 2005. *Standard Methods for the Examination of Water and Wastewater, 21st Edition.* American Public Health Association: Washington, DC.

DoD. 2017. *DoD Quality Systems Manual for Environmental Laboratories, Version 5.1*.

EPA. 2017. *USEPA Contract Laboratory Program, National Functional Guidelines for Inorganic Superfund Method Data Review, Final.* Office of Superfund Remediation and Technology Innovation, OLEM 9355.0-135 and EPA-540-R-2017-011. January.

EPA. 2017. *USEPA Contract Laboratory Program, National Functional Guidelines for Superfund Organic Methods Data Review, Final.* Office of Superfund Remediation and Technology Innovation, OLEM 9355.0-135 and EPA-540-R-2017-01. January.

EPA. 1996. *Test Methods for Evaluating Solid Wastes, Physical/Chemical Methods (2006), SW-846 On-line*. Office of Solid Waste, Washington D.C. http://www.epa.gov/osw/hazard/testmethods/sw846.

USACE. 2011. *Quality Assurance Project Plan, Bulk Fuels Facility (BFF) Spill, Solid Waste Management Units ST-106 and SS-111, Kirtland Air Force Base, Albuquerque, New Mexico.* Prepared by Shaw Environmental & Infrastructure, Inc. for the USACE Albuquerque District under USACE Contract No. W912DY-10-D-0014, Delivery Order 0002. April.

USACE. 2016. *Ethylene Dibromide in Situ Biodegration Pilot Test Work Plan, Bulk Fuels Facility, Kirtland Air Force New Mexico*

USACE. 2005. *Environmental Quality – Guidance for Evaluating Performance-Based Chemical Data,* EM 200-1-10. June 30.

TABLES

List of Appendix G-1 Tables

Appendix G-1 – Table 1: Summary of Samples Collected, Sample Date, Sample Location, Analysis Method, and Sample Delivery Group

Appendix G-1 – Table 2: Data Qualification Flags and Reason Codes

Appendix G-1 – Table 3: Qualified Data Summary

Appendix G-1 – Table 4: Detected Trip Blank Results and Associated Sample Results

Appendix G-1 – Table 5: Field Duplicate Summary

Appendix G-1 – Table 6: Contractual, Analytical, Technical, and Holding Time Completeness

Appendix G-1 - Table 1. Summary of Samples Collected, Sample Date, Sample Location, Analysis Method, and Sample Delivery Group

Sample Date	SDG	Location	Sample ID	Sample Type	Analytic Method	Lab
06/29/2017	160-23091-1	KAFB-106EX1	106EX1-BL-062917	REG	E300	TASTL
		KAFB-106EX2	106EX2-BL-062917	REG	E300	TASTL
		KAFB-106IN1	106IN1-BL-062917	REG	E300	TASTL
	71_144OF	KAFB-106EX1	106EX1-BL-062917	REG	QUANTARRAY	MI
		KAFB-106EX2	106EX2-BL-062917	REG	QUANTARRAY	MI
		KAFB-106IN1	106IN1-BL-062917	REG	QUANTARRAY	MI
	9720	KAFB-106EX1	106EX1-BL-062917	REG	E300M	APTIM
					RSK-175	APTIM
		KAFB-106EX2	106EX2-BL-062917	REG	E300M	APTIM
					RSK-175	APTIM
		KAFB-106IN1	106IN1-BL-062917	REG	E300M	APTIM
					RSK-175	APTIM
	FLUOR	KAFB-106EX1	106EX1-BL-062917	REG	FLUORIMETRIC	CHL
		KAFB-106EX2	106EX2-BL-062917	REG	FLUORIMETRIC	CHL
		KAFB-106IN1	106IN1-BL-062917	REG	FLUORIMETRIC	CHL
	KAFB_001	KAFB-106EX1	106EX1-BL-062917	REG	E353.2	EPLN
					SM2320B	EPLN
					SM4500PE	EPLN
					SW6010C	EPLN
					SW8011	EPLN
					SW8260B	EPLN
					SW9056A	EPLN
		KAFB-106EX2	106EX2-BL-062917	REG	E353.2	EPLN
					SM2320B	EPLN
					SM4500PE	EPLN
					SW6010C	EPLN
					SW8011	EPLN
					SW8260B	EPLN
					SW9056A	EPLN
		KAFB-106IN1	106IN1-BL-062917	REG	E353.2	EPLN
					SM2320B	EPLN
					SM4500PE	EPLN
					SW6010C	EPLN
					SW8011	EPLN
					SW8260B	EPLN
					SW9056A	EPLN
	USGS	KAFB-106EX1	106EX1-BL-062917	REG	IRMS	USGS
		KAFB-106EX2	106EX2-BL-062917	REG	IRMS	USGS
		KAFB-106IN1	106IN1-BL-062917	REG	IRMS	USGS
7/18/2017	160-23091-1	KAFB-106063	106063-BL-071817	REG	E300	TASTL
	160-23091-1	KAFB-106MW1-I	106MW1I-BL-071817	REG	E300	TASTL
	56_056OG	KAFB-106063	106063-BL-071817	REG	QUANTARRAY	MI
		KAFB-106MW1-I	106MW1I-BL-071817	REG	QUANTARRAY	MI
	9722	KAFB-106063	106063-BL-071817	REG	E300M	APTIM
					RSK-175	APTIM

Appendix G-1 - Table 1. Summary of Samples Collected, Sample Date, Sample Location, Analysis Method, and Sample Delivery Group

Sample Date	SDG	Location	Sample ID	Sample Type	Analytic Method	Lab
7/18/2017	9722	KAFB-106MW1-I	106MW1I-BL-071817	REG	E300M	APTIM
					RSK-175	APTIM
	FLUOR	KAFB-106063	106063-BL-071817	REG	FLUORIMETRIC	CHL
		KAFB-106MW1-I	106MW1I-BL-071817	REG	FLUORIMETRIC	CHL
	KAFB_001	KAFB-106063	106063-BL-071817	REG	E353.2	EPLN
					SM2320B	EPLN
					SM4500PE	EPLN
					SW6010C	EPLN
					SW8011	EPLN
					SW8260B	EPLN
					SW9056A	EPLN
		KAFB-106MW1-I	106MW1I-BL-071817	REG	E353.2	EPLN
					SM2320B	EPLN
					SM4500PE	EPLN
					SW6010C	EPLN
					SW8011	EPLN
					SW8260B	EPLN
					SW9056A	EPLN
	USGS	KAFB-106063	106063-BL-071817	REG	IRMS	USGS
		KAFB-106MW1-I	106MW1I-BL-071817	REG	IRMS	USGS
7/24/2017	160-23530-1	KAFB-106MW2-I	106MW2I-BL-072417	REG	E300	TASTL
			106MW2I-BL-FD-072417	FD	E300	TASTL
	56_056OG	KAFB-106MW2-I	106MW2I-BL-072417	REG	QUANTARRAY	MI
	9725	KAFB-106MW2-I	106MW2I-BL-072417	REG	E300M	APTIM
					RSK-175	APTIM
			106MW2I-BL-FD-072417	FD	E300M	APTIM
					RSK-175	APTIM
	FLUOR	KAFB-106MW2-I	106MW2I-BL-072417	REG	FLUORIMETRIC	CHL
			106MW2I-BL-FD-072417	FD	FLUORIMETRIC	CHL
	KAFB_001	KAFB-106MW2-I	106MW2I-BL-072417	REG	E353.2	EPLN
					SM2320B	EPLN
					SM4500PE	EPLN
					SW6010C	EPLN
					SW8011	EPLN
					SW8260B	EPLN
					SW9056A	EPLN

Appendix G-1 - Table 1. Summary of Samples Collected, Sample Date, Sample Location, Analysis Method, and Sample Delivery Group

Sample Date	SDG	Location	Sample ID	Sample Type	Analytic Method	Lab
7/24/2017	KAFB_001	KAFB-106MW2-I	106MW2I-BL-FD-072417	FD	E353.2	EPLN
					SM2320B	EPLN
					SM4500PE	EPLN
					SW6010C	EPLN
					SW8011	EPLN
					SW8260B	EPLN
					SW9056A	EPLN
	USGS	KAFB-106MW2-I	106MW2I-BL-072417	REG	IRMS	USGS
			106MW2I-BL-FD-072417	FD	IRMS	USGS
08/07/2017	160-23826-1	KAFB-106MW2-S	106MW2S-BL-080717	REG	E300	TASTL
	30_031OH	KAFB-106MW2-S	106MW2S-BL-080717	REG	QUANTARRAY	MI
	9731	KAFB-106MW2-S	106MW2S-BL-080717	REG	E300M	APTIM
					RSK-175	APTIM
	FLUOR	KAFB-106MW2-S	106MW2S-BL-080717	REG	FLUORIMETRIC	CHL
	KAFB_002	KAFB-106MW2-S	106MW2S-BL-080717	REG	E353.2	EPLN
					SM2320B	EPLN
					SM4500PE	EPLN
					SW6010C	EPLN
					SW8011	EPLN
					SW8260B	EPLN
					SW9056A	EPLN
	USGS	KAFB-106MW2-S	106MW2S-BL-080717	REG	IRMS	USGS
08/16/2017	160-23826-1	KAFB-106064	106064-BL-081617	REG	E300	TASTL
	20_063OH	KAFB-106064	106064-BL-081617	REG	QUANTARRAY	MI
	9737	KAFB-106064	106064-BL-081617	REG	E300M	APTIM
					RSK-175	APTIM
	FLUOR	KAFB-106064	106064-BL-081617	REG	FLUORIMETRIC	CHL
	KAFB_002	KAFB-106064	106064-BL-081617	REG	E353.2	EPLN
					SM2320B	EPLN
					SM4500PE	EPLN
					SW6010C	EPLN
					SW8011	EPLN
					SW8260B	EPLN
					SW9056A	EPLN
	USGS	KAFB-106064	106064-BL-081617	REG	IRMS	USGS
9/18/2017	160-24564-1	KAFB-106063	106063-BL-091817	REG	E300	TASTL
		KAFB-106MW1-I	106MW1I-BL-091817	REG	E300	TASTL
	9743	KAFB-106063	106063-BL-091817	REG	E300M	APTIM
					RSK-175	APTIM
		KAFB-106MW1-I	106MW1I-BL-091817	REG	E300M	APTIM
					RSK-175	APTIM
9/18/2017	FLUOR	KAFB-106063	106063-BL-091817	REG	FLUORIMETRIC	CHL
9/18/2017	FLUOR	KAFB-106MW1-I	106MW1I-BL-091817	REG	FLUORIMETRIC	CHL
	KAFB_003	KAFB-106063	106063-BL-091817	REG	E353.2	EPLN
					SM2320B	EPLN
					SM4500PE	EPLN
					SW6010C	EPLN

Appendix G-1 - Table 1. Summary of Samples Collected, Sample Date, Sample Location, Analysis Method, and Sample Delivery Group

Sample Date	SDG	Location	Sample ID	Sample Type	Analytic Method	Lab
9/18/2017	KAFB_003	KAFB-106063	106063-BL-091817	REG	SW8011	EPLN
					SW8260B	EPLN
					SW9056A	EPLN
		KAFB-106MW1-I	106MW1I-BL-091817	REG	E353.2	EPLN
					SM2320B	EPLN
					SM4500PE	EPLN
					SW6010C	EPLN
					SW8011	EPLN
					SW8260B	EPLN
					SW9056A	EPLN
	USGS	KAFB-106063	106063-BL-091817	REG	IRMS	USGS
		KAFB-106MW1-I	106MW1I-BL-091817	REG	IRMS	USGS
9/19/2017	160-24564-1	KAFB-106064	106064-BL-091917	REG	E300	TASTL
		KAFB-106MW1-S	106MW1S-BL-091917	REG	E300	TASTL
		KAFB-106MW2-I	106MW2I-BL-091917	REG	E300	TASTL
			106MW2I-BL-FD-091917	FD	E300	TASTL
		KAFB-106MW2-S	106MW2S-BL-091917	REG	E300	TASTL
	160-24580-1	KAFB-106064	106064-BL-091917	REG	E300	TASTL
		KAFB-106MW2-S	106MW2S-BL-091917	REG	E300	TASTL
	86_066OI	KAFB-106MW1-S	106MW1S-BL-091917	REG	QUANTARRAY	MI
	9744	KAFB-106064	106064-BL-091917	REG	E300M	APTIM
					RSK-175	APTIM
		KAFB-106MW1-S	106MW1S-BL-091917	REG	E300M	APTIM
					RSK-175	APTIM
		KAFB-106MW2-I	106MW2I-BL-091917	REG	E300M	APTIM
					RSK-175	APTIM
			106MW2I-BL-FD-091917	FD	E300M	APTIM
					RSK-175	APTIM
		KAFB-106MW2-S	106MW2S-BL-091917	REG	E300M	APTIM
					RSK-175	APTIM
	FLUOR	KAFB-106064	106064-BL-091917	REG	FLUORIMETRIC	CHL
		KAFB-106MW1-S	106MW1S-BL-091917	REG	FLUORIMETRIC	CHL
		KAFB-106MW2-I	106MW2I-BL-091917	REG	FLUORIMETRIC	CHL

Appendix G-1 - Table 1. Summary of Samples Collected, Sample Date, Sample Location, Analysis Method, and Sample Delivery Group

Sample Date	SDG	Location	Sample ID	Sample Type	Analytic Method	Lab
9/19/2017	FLUOR	KAFB-106MW2-I	106MW2I-BL-FD-091917	FD	FLUORIMETRIC	CHL
		KAFB-106MW2-S	106MW2S-BL-091917	REG	FLUORIMETRIC	CHL
	KAFB_003	KAFB-106064	106064-BL-091917	REG	E353.2	EPLN
					SM2320B	EPLN
					SM4500PE	EPLN
					SW6010C	EPLN
					SW8011	EPLN
					SW8260B	EPLN
					SW9056A	EPLN
		KAFB-106MW1-S	106MW1S-BL-091917	REG	E353.2	EPLN
					SM2320B	EPLN
					SM4500PE	EPLN
					SW6010C	EPLN
					SW8011	EPLN
					SW8260B	EPLN
					SW9056A	EPLN
		KAFB-106MW2-I	106MW2I-BL-091917	REG	E353.2	EPLN
					SM2320B	EPLN
					SM4500PE	EPLN
					SW6010C	EPLN
					SW8011	EPLN
					SW8260B	EPLN
					SW9056A	EPLN
			106MW2I-BL-FD-091917	FD	E353.2	EPLN
					SM2320B	EPLN
					SM4500PE	EPLN
					SW6010C	EPLN
					SW8011	EPLN
					SW8260B	EPLN
					SW9056A	EPLN
		KAFB-106MW2-S	106MW2S-BL-091917	REG	E353.2	EPLN
					SM2320B	EPLN
					SM4500PE	EPLN
					SW6010C	EPLN
					SW8011	EPLN
					SW8260B	EPLN
					SW9056A	EPLN
	USGS	KAFB-106064	106064-BL-091917	REG	IRMS	USGS
		KAFB-106MW1-S	106MW1S-BL-091917	REG	IRMS	USGS
		KAFB-106MW2-I	106MW2I-BL-091917	REG	IRMS	USGS
			106MW2I-BL-FD-091917	FD	IRMS	USGS
		KAFB-106MW2-S	106MW2S-BL-091917	REG	IRMS	USGS
9/26/2017	160-24706-1	KAFB-106EX1	106EX1-BL-092617	REG	E300	TASTL
		KAFB-106EX2	106EX2-BL-092617	REG	E300	TASTL
		KAFB-106IN1	106IN1-BL-092617	REG	E300	TASTL

Appendix G-1 - Table 1. Summary of Samples Collected, Sample Date, Sample Location, Analysis Method, and Sample Delivery Group

Sample Date	SDG	Location	Sample ID	Sample Type	Analytic Method	Lab
9/26/2017	9746	KAFB-106EX1	106EX1-BL-092617	REG	E300M	APTIM
					RSK-175	APTIM
		KAFB-106EX2	106EX2-BL-092617	REG	E300M	APTIM
					RSK-175	APTIM
		KAFB-106IN1	106IN1-BL-092617	REG	E300M	APTIM
					RSK-175	APTIM
	FLUOR	KAFB-106EX1	106EX1-BL-092617	REG	FLUORIMETRIC	CHL
		KAFB-106EX2	106EX2-BL-092617	REG	FLUORIMETRIC	CHL
		KAFB-106IN1	106IN1-BL-092617	REG	FLUORIMETRIC	CHL
	KAFB_003	KAFB-106EX1	106EX1-BL-092617	REG	E353.2	EPLN
					SM2320B	EPLN
					SM4500PE	EPLN
					SW6010C	EPLN
					SW8011	EPLN
					SW8260B	EPLN
					SW9056A	EPLN
		KAFB-106EX2	106EX2-BL-092617	REG	E353.2	EPLN
					SM2320B	EPLN
					SM4500PE	EPLN
					SW6010C	EPLN
					SW8011	EPLN
					SW8260B	EPLN
					SW9056A	EPLN
		KAFB-106IN1	106IN1-BL-092617	REG	E353.2	EPLN
					SM2320B	EPLN
					SM4500PE	EPLN
					SW6010C	EPLN
					SW8011	EPLN
					SW8260B	EPLN
					SW9056A	EPLN
	USGS	KAFB-106EX1	106EX1-BL-092617	REG	IRMS	USGS
		KAFB-106EX2	106EX2-BL-092617	REG	IRMS	USGS
		KAFB-106IN1	106IN1-BL-092617	REG	IRMS	USGS
10/02/2017	FLUOR	KAFB-106IN1	106IN1-P1R-100217-1	REG	FLUORIMETRIC	CHL
			106IN1-P1R-100217-2	REG	FLUORIMETRIC	CHL
	USGS	KAFB-106IN1	106IN1-P1R-100217-1	REG	IRMS	USGS
			106IN1-P1R-100217-2	REG	IRMS	USGS
10/03/2017	FLUOR	KAFB-106IN1	106IN1-P1R-100217-3	REG	FLUORIMETRIC	CHL
	USGS	KAFB-106IN1	106IN1-P1R-100317-3	REG	IRMS	USGS
10/4/2017	FLUOR	KAFB-106063	106063-P1R-100417	REG	FLUORIMETRIC	CHL
		KAFB-106064	106064-P1R-100417	REG	FLUORIMETRIC	CHL
10/4/2017	FLUOR	KAFB-106064	106064-P1R-100417-FD	FD	FLUORIMETRIC	CHL
		KAFB-106EX1	106EX1-P1R-100417	REG	FLUORIMETRIC	CHL
		KAFB-106EX2	106EX2-P1R-100417	REG	FLUORIMETRIC	CHL

Appendix G-1 - Table 1. Summary of Samples Collected, Sample Date, Sample Location, Analysis Method, and Sample Delivery Group

Sample Date	SDG	Location	Sample ID	Sample Type	Analytic Method	Lab
10/4/2017	FLUOR	KAFB-106MW1-I	106MW1I-P1R-100417	REG	FLUORIMETRIC	CHL
		KAFB-106MW1-S	106MW1S-P1R-100417	REG	FLUORIMETRIC	CHL
		KAFB-106MW2-I	106MW2I-P1R-100417	REG	FLUORIMETRIC	CHL
		KAFB-106MW2-S	106MW2S-P1R-100417	REG	FLUORIMETRIC	CHL
	USGS	KAFB-106063	106063-P1R-100417	REG	IRMS	USGS
		KAFB-106064	106064-P1R-100417	REG	IRMS	USGS
			106064-P1R-100417-FD	FD	IRMS	USGS
		KAFB-106EX1	106EX1-P1R-100417	REG	IRMS	USGS
		KAFB-106EX2	106EX2-P1R-100417	REG	IRMS	USGS
		KAFB-106MW1-I	106MW1I-P1R-100417	REG	IRMS	USGS
		KAFB-106MW1-S	106MW1S-P1R-100417	REG	IRMS	USGS
		KAFB-106MW2-I	106MW2I-P1R-100417	REG	IRMS	USGS
		KAFB-106MW2-S	106MW2S-P1R-100417	REG	IRMS	USGS
10/6/2017	FLUOR	KAFB-106063	106063-P1R-100617	REG	FLUORIMETRIC	CHL
		KAFB-106064	106064-P1R-100617	REG	FLUORIMETRIC	CHL
		KAFB-106EX1	106EX1-P1R-100617	REG	FLUORIMETRIC	CHL
		KAFB-106EX2	106EX2-P1R-100617	REG	FLUORIMETRIC	CHL
		KAFB-106MW1-I	106MW1I-P1R-100617	REG	FLUORIMETRIC	CHL
		KAFB-106MW1-S	106MW1S-P1R-100617	REG	FLUORIMETRIC	CHL
			106MW1S-P1R-100617-FD	FD	FLUORIMETRIC	CHL
		KAFB-106MW2-I	106MW2I-P1R-100617	REG	FLUORIMETRIC	CHL
		KAFB-106MW2-S	106MW2S-P1R-100617	REG	FLUORIMETRIC	CHL
	USGS	KAFB-106063	106063-P1R-100617	REG	IRMS	USGS
		KAFB-106064	106064-P1R-100617	REG	IRMS	USGS
10/6/2017	USGS	KAFB-106EX1	106EX1-P1R-100617	REG	IRMS	USGS
		KAFB-106EX2	106EX2-P1R-100617	REG	IRMS	USGS
		KAFB-106MW1-I	106MW1I-P1R-100617	REG	IRMS	USGS
		KAFB-106MW1-S	106MW1S-P1R-100617	REG	IRMS	USGS
			106MW1S-P1R-100617-FD	FD	IRMS	USGS
		KAFB-106MW2-I	106MW2I-P1R-100617	REG	IRMS	USGS

Appendix G-1 - Table 1. Summary of Samples Collected, Sample Date, Sample Location, Analysis Method, and Sample Delivery Group

Sample Date	SDG	Location	Sample ID	Sample Type	Analytic Method	Lab
10/6/2017	USGS	KAFB-106MW2-S	106MW2S-P1R-100617	REG	IRMS	USGS
10/09/2017	FLUOR	KAFB-106063	106063-P1R-100917	REG	FLUORIMETRIC	CHL
		KAFB-106064	106064-P1R-100917	REG	FLUORIMETRIC	CHL
		KAFB-106EX1	106EX1-P1R-100917	REG	FLUORIMETRIC	CHL
		KAFB-106EX2	106EX2-P1R-100917	REG	FLUORIMETRIC	CHL
		KAFB-106MW1-I	106MW1I-P1R-100917	REG	FLUORIMETRIC	CHL
			106MW1I-P1R-100917-FD	FD	FLUORIMETRIC	CHL
		KAFB-106MW1-S	106MW1S-P1R-100917	REG	FLUORIMETRIC	CHL
		KAFB-106MW2-I	106MW2I-P1R-100917	REG	FLUORIMETRIC	CHL
		KAFB-106MW2-S	106MW2S-P1R-100917	REG	FLUORIMETRIC	CHL
	USGS	KAFB-106063	106063-P1R-100917	REG	IRMS	USGS
		KAFB-106064	106064-P1R-100917	REG	IRMS	USGS
		KAFB-106EX1	106EX1-P1R-100917	REG	IRMS	USGS
		KAFB-106EX2	106EX2-P1R-100917	REG	IRMS	USGS
		KAFB-106MW1-I	106MW1I-P1R-100917	REG	IRMS	USGS
			106MW1I-P1R-100917-FD	FD	IRMS	USGS
		KAFB-106MW1-S	106MW1S-P1R-100917	REG	IRMS	USGS
		KAFB-106MW2-I	106MW2I-P1R-100917	REG	IRMS	USGS
		KAFB-106MW2-S	106MW2S-P1R-100917	REG	IRMS	USGS
10/12/2017	FLUOR	KAFB-106063	106063-P1R-101217	REG	FLUORIMETRIC	CHL
		KAFB-106064	106064-P1R-101217	REG	FLUORIMETRIC	CHL
10/12/2017	FLUOR	KAFB-106EX1	106EX1-P1R-101217	REG	FLUORIMETRIC	CHL
		KAFB-106EX2	106EX2-P1R-101217	REG	FLUORIMETRIC	CHL
		KAFB-106MW1-I	106MW1I-P1R-101217	REG	FLUORIMETRIC	CHL
		KAFB-106MW1-S	106MW1S-P1R-101217	REG	FLUORIMETRIC	CHL
		KAFB-106MW2-I	106MW2I-P1R-101217	REG	FLUORIMETRIC	CHL
		KAFB-106MW2-S	106MW2S-P1R-101217	REG	FLUORIMETRIC	CHL
			106MW2S-P1R-101217-FD	FD	FLUORIMETRIC	CHL
	USGS	KAFB-106063	106063-P1R-101217	REG	IRMS	USGS
		KAFB-106064	106064-P1R-101217	REG	IRMS	USGS

Appendix G-1 - Table 1. Summary of Samples Collected, Sample Date, Sample Location, Analysis Method, and Sample Delivery Group

Sample Date	SDG	Location	Sample ID	Sample Type	Analytic Method	Lab
10/12/2017	USGS	KAFB-106EX1	106EX1-P1R-101217	REG	IRMS	USGS
		KAFB-106EX2	106EX2-P1R-101217	REG	IRMS	USGS
		KAFB-106MW1-I	106MW1I-P1R-101217	REG	IRMS	USGS
		KAFB-106MW1-S	106MW1S-P1R-101217	REG	IRMS	USGS
		KAFB-106MW2-I	106MW2I-P1R-101217	REG	IRMS	USGS
		KAFB-106MW2-S	106MW2S-P1R-101217	REG	IRMS	USGS
			106MW2S-P1R-101217-FD	FD	IRMS	USGS
10/16/2017	FLUOR	KAFB-106063	106063-P1R-101617	REG	FLUORIMETRIC	CHL
		KAFB-106064	106064-P1R-101617	REG	FLUORIMETRIC	CHL
		KAFB-106EX1	106EX1-P1R-101617	REG	FLUORIMETRIC	CHL
			106EX1-P1R-101617-FD	FD	FLUORIMETRIC	CHL
		KAFB-106EX2	106EX2-P1R-101617	REG	FLUORIMETRIC	CHL
		KAFB-106MW1-I	106MW1I-P1R-101617	REG	FLUORIMETRIC	CHL
		KAFB-106MW1-S	106MW1S-P1R-101617	REG	FLUORIMETRIC	CHL
		KAFB-106MW2-I	106MW2I-P1R-101617	REG	FLUORIMETRIC	CHL
		KAFB-106MW2-S	106MW2S-P1R-101617	REG	FLUORIMETRIC	CHL
	USGS	KAFB-106063	106063-P1R-101617	REG	IRMS	USGS
		KAFB-106064	106064-P1R-101617	REG	IRMS	USGS
10/16/2017	USGS	KAFB-106EX1	106EX1-P1R-101617	REG	IRMS	USGS
			106EX1-P1R-101617-FD	FD	IRMS	USGS
		KAFB-106EX2	106EX2-P1R-101617	REG	IRMS	USGS
		KAFB-106MW1-I	106MW1I-P1R-101617	REG	IRMS	USGS
		KAFB-106MW1-S	106MW1S-P1R-101617	REG	IRMS	USGS
		KAFB-106MW2-I	106MW2I-P1R-101617	REG	IRMS	USGS
		KAFB-106MW2-S	106MW2S-P1R-101617	REG	IRMS	USGS
10/20/2017	FLUOR	KAFB-106063	106063-P1R-102017	REG	FLUORIMETRIC	CHL
		KAFB-106064	106064-P1R-102017	REG	FLUORIMETRIC	CHL
		KAFB-106EX1	106EX1-P1R-102017	REG	FLUORIMETRIC	CHL
		KAFB-106EX2	106EX2-P1R-102017	REG	FLUORIMETRIC	CHL
		KAFB-106MW1-I	106MW1I-P1R-102017	REG	FLUORIMETRIC	CHL

Appendix G-1 - Table 1. Summary of Samples Collected, Sample Date, Sample Location, Analysis Method, and Sample Delivery Group

Sample Date	SDG	Location	Sample ID	Sample Type	Analytic Method	Lab
10/20/2017	FLUOR	KAFB-106MW1-S	106MW1S-P1R-102017	REG	FLUORIMETRIC	CHL
		KAFB-106MW2-I	106MW2I-P1R-102017	REG	FLUORIMETRIC	CHL
		KAFB-106MW2-S	106MW2S-P1R-102017	REG	FLUORIMETRIC	CHL
	USGS	KAFB-106063	106063-P1R-102017	REG	IRMS	USGS
		KAFB-106064	106064-P1R-102017	REG	IRMS	USGS
		KAFB-106EX1	106EX1-P1R-102017	REG	IRMS	USGS
		KAFB-106EX2	106EX2-P1R-102017	REG	IRMS	USGS
		KAFB-106MW1-I	106MW1I-P1R-102017	REG	IRMS	USGS
		KAFB-106MW1-S	106MW1S-P1R-102017	REG	IRMS	USGS
		KAFB-106MW2-I	106MW2I-P1R-102017	REG	IRMS	USGS
			106MW2I-P1R-102017-FD	FD	IRMS	USGS
		KAFB-106MW2-S	106MW2S-P1R-102017	REG	IRMS	USGS
10/24/2017	160-25239-1	KAFB-106063	106063-P1R-102417	REG	E300	TASTL
		KAFB-106064	106064-P1R-102417	REG	E300	TASTL
		KAFB-106EX1	106EX1-P1R-102417	REG	E300	TASTL
	160-25239-1		106EX1-P1R-102417-FD	FD	E300	TASTL
		KAFB-106MW1-S	106MW1S-P1R-102417	REG	E300	TASTL
	9757	KAFB-106063	106063-P1R-102417	REG	E300M	APTIM
					RSK-175	APTIM
		KAFB-106064	106064-P1R-102417	REG	E300M	APTIM
					RSK-175	APTIM
		KAFB-106EX1	106EX1-P1R-102417	REG	E300M	APTIM
					RSK-175	APTIM
			106EX1-P1R-102417-FD	FD	E300M	APTIM
					RSK-175	APTIM
		KAFB-106MW1-S	106MW1S-P1R-102417	REG	E300M	APTIM
					RSK-175	APTIM
	FLUOR	KAFB-106063	106063-P1R-102417	REG	FLUORIMETRIC	CHL
		KAFB-106064	106064-P1R-102417	REG	FLUORIMETRIC	CHL
		KAFB-106EX1	106EX1-P1R-102417	REG	FLUORIMETRIC	CHL
		KAFB-106MW1-S	106MW1S-P1R-102417	REG	FLUORIMETRIC	CHL
	KAFB_004	KAFB-106063	106063-P1R-102417	REG	E353.2	EPLN
					SM2320B	EPLN
					SM4500PE	EPLN
					SW6010C	EPLN
					SW8011	EPLN
					SW8260B	EPLN
					SW9056A	EPLN
		KAFB-106064	106064-P1R-102417	REG	E353.2	EPLN
					SM2320B	EPLN

Appendix G-1 - Table 1. Summary of Samples Collected, Sample Date, Sample Location, Analysis Method, and Sample Delivery Group

Sample Date	SDG	Location	Sample ID	Sample Type	Analytic Method	Lab
10/24/2017	KAFB_004	KAFB-106064	106064-P1R-102417	REG	SM4500PE	EPLN
					SW6010C	EPLN
					SW8011	EPLN
					SW8260B	EPLN
					SW9056A	EPLN
		KAFB-106EX1	106EX1-P1R-102417	REG	E353.2	EPLN
					SM2320B	EPLN
					SM4500PE	EPLN
					SW6010C	EPLN
					SW8011	EPLN
					SW8260B	EPLN
					SW9056A	EPLN
			106EX1-P1R-102417-FD	FD	E353.2	EPLN
					SM2320B	EPLN
					SM4500PE	EPLN
					SW6010C	EPLN
					SW8011	EPLN
					SW8260B	EPLN
					SW9056A	EPLN
		KAFB-106MW1-S	106MW1S-P1R-102417	REG	E353.2	EPLN
					SM2320B	EPLN
					SM4500PE	EPLN
					SW6010C	EPLN
					SW8011	EPLN
	KAFB_004				SW8260B	EPLN
					SW9056A	EPLN
	USGS	KAFB-106063	106063-P1R-102417	REG	IRMS	USGS
		KAFB-106064	106064-P1R-102417	REG	IRMS	USGS
		KAFB-106EX1	106EX1-P1R-102417	REG	IRMS	USGS
			106EX1-P1R-102417-FD	FD	IRMS	USGS
		KAFB-106MW1-S	106MW1S-P1R-102417	REG	IRMS	USGS
10/25/2017	160-25239-1	KAFB-106EX2	106EX2-P1R-102517	REG	E300	TASTL
		KAFB-106MW1-I	106MW1I-P1R-102517	REG	E300	TASTL
		KAFB-106MW2-I	106MW2I-P1R-102517	REG	E300	TASTL
		KAFB-106MW2-S	106MW2S-P1R-102517	REG	E300	TASTL
	9758	KAFB-106EX2	106EX2-P1R-102517	REG	E300M	APTIM
					RSK-175	APTIM
		KAFB-106MW1-I	106MW1I-P1R-102517	REG	E300M	APTIM
					RSK-175	APTIM
		KAFB-106MW2-I	106MW2I-P1R-102517	REG	E300M	APTIM
					RSK-175	APTIM
		KAFB-106MW2-S	106MW2S-P1R-102517	REG	E300M	APTIM
					RSK-175	APTIM
	FLUOR	KAFB-106EX2	106EX2-P1R-102517	REG	FLUORIMETRIC	CHL
		KAFB-106MW1-I	106MW1I-P1R-102517	REG	FLUORIMETRIC	CHL
		KAFB-106MW2-I	106MW2I-P1R-102517	REG	FLUORIMETRIC	CHL
		KAFB-106MW2-S	106MW2S-P1R-102517	REG	FLUORIMETRIC	CHL

Appendix G-1 - Table 1. Summary of Samples Collected, Sample Date, Sample Location, Analysis Method, and Sample Delivery Group

Sample Date	SDG	Location	Sample ID	Sample Type	Analytic Method	Lab
10/25/2017	KAFB_004	KAFB-106EX2	106EX2-P1R-102517	REG	E353.2	EPLN
					SM2320B	EPLN
					SM4500PE	EPLN
					SW6010C	EPLN
					SW8011	EPLN
					SW8260B	EPLN
					SW9056A	EPLN
		KAFB-106MW1-I	106MW1I-P1R-102517	REG	E353.2	EPLN
					SM2320B	EPLN
					SM4500PE	EPLN
					SW6010C	EPLN
					SW8011	EPLN
					SW8260B	EPLN
					SW9056A	EPLN
		KAFB-106MW2-I	106MW2I-P1R-102517	REG	E353.2	EPLN
					SM2320B	EPLN
					SM4500PE	EPLN
					SW6010C	EPLN
					SW8011	EPLN
	KAFB_004	KAFB-106MW2-I	106MW2I-P1R-102517	REG	SW8260B	EPLN
					SW9056A	EPLN
		KAFB-106MW2-S	106MW2S-P1R-102517	REG	E353.2	EPLN
					SM2320B	EPLN
					SM4500PE	EPLN
					SW6010C	EPLN
					SW8011	EPLN
					SW8260B	EPLN
					SW9056A	EPLN
	USGS	KAFB-106EX2	106EX2-P1R-102517	REG	IRMS	USGS
		KAFB-106MW1-I	106MW1I-P1R-102517	REG	IRMS	USGS
		KAFB-106MW2-I	106MW2I-P1R-102517	REG	IRMS	USGS
		KAFB-106MW2-S	106MW2S-P1R-102517	REG	IRMS	USGS
11/1/2017	FLUOR	KAFB-106063	106063-P1R-110117	REG	FLUORIMETRIC	CHL
		KAFB-106064	106064-P1R-110117	REG	FLUORIMETRIC	CHL
		KAFB-106EX1	106EX1-P1R-110117	REG	FLUORIMETRIC	CHL
		KAFB-106EX2	106EX2-P1R-110117	REG	FLUORIMETRIC	CHL
			106EX2-P1R-110117-FD	FD	FLUORIMETRIC	CHL
		KAFB-106MW1-I	106MW1I-P1R-110117	REG	FLUORIMETRIC	CHL
		KAFB-106MW1-S	106MW1S-P1R-110117	REG	FLUORIMETRIC	CHL
		KAFB-106MW2-I	106MW2I-P1R-110117	REG	FLUORIMETRIC	CHL
		KAFB-106MW2-S	106MW2S-P1R-110117	REG	FLUORIMETRIC	CHL
	USGS	KAFB-106063	106063-P1R-110117	REG	IRMS	USGS
		KAFB-106064	106064-P1R-110117	REG	IRMS	USGS
		KAFB-106EX1	106EX1-P1R-110117	REG	IRMS	USGS

Appendix G-1 - Table 1. Summary of Samples Collected, Sample Date, Sample Location, Analysis Method, and Sample Delivery Group

Sample Date	SDG	Location	Sample ID	Sample Type	Analytic Method	Lab
11/1/2017	USGS	KAFB-106EX2	106EX2-P1R-110117	REG	IRMS	USGS
11/1/2017			106EX2-P1R-110117-FD	FD	IRMS	USGS
		KAFB-106MW1-I	106MW1I-P1R-110117	REG	IRMS	USGS
		KAFB-106MW1-S	106MW1S-P1R-110117	REG	IRMS	USGS
		KAFB-106MW2-I	106MW2I-P1R-110117	REG	IRMS	USGS
		KAFB-106MW2-S	106MW2S-P1R-110117	REG	IRMS	USGS
11/15/2017	160-25627-1	KAFB-106063	106063-P1P-111517	REG	E300	TASTL
		KAFB-106064	106064-P1P-111517	REG	E300	TASTL
		KAFB-106MW1-I	106MW1I-P1P-111517	REG	E300	TASTL
		KAFB-106MW1-S	106MW1S-P1P-111517	REG	E300	TASTL
		KAFB-106MW2-I	106MW2I-P1P-111517	REG	E300	TASTL
	9761	KAFB-106063	106063-P1P-111517	REG	E300M	APTIM
					RSK-175	APTIM
		KAFB-106064	106064-P1P-111517	REG	E300M	APTIM
					RSK-175	APTIM
		KAFB-106MW1-I	106MW1I-P1P-111517	REG	E300M	APTIM
					RSK-175	APTIM
		KAFB-106MW1-S	106MW1S-P1P-111517	REG	E300M	APTIM
					RSK-175	APTIM
		KAFB-106MW2-I	106MW2I-P1P-111517	REG	E300M	APTIM
					RSK-175	APTIM
	FLUOR	KAFB-106063	106063-P1P-111517	REG	FLUORIMETRIC	CHL
		KAFB-106064	106064-P1P-111517	REG	FLUORIMETRIC	CHL
		KAFB-106MW1-I	106MW1I-P1P-111517	REG	FLUORIMETRIC	CHL
		KAFB-106MW1-S	106MW1S-P1P-111517	REG	FLUORIMETRIC	CHL
		KAFB-106MW2-I	106MW2I-P1P-111517	REG	FLUORIMETRIC	CHL
	KAFB_005	KAFB-106063	106063-P1P-111517	REG	E353.2	EPLN
					SM2320B	EPLN
					SM4500PE	EPLN
					SW6010C	EPLN
					SW8011	EPLN
					SW8260B	EPLN
					SW9056A	EPLN
		KAFB-106064	106064-P1P-111517	REG	E353.2	EPLN
					SM2320B	EPLN
					SM4500PE	EPLN
					SW6010C	EPLN
					SW8011	EPLN
					SW8260B	EPLN
					SW9056A	EPLN
		KAFB-106MW1-I	106MW1I-P1P-111517	REG	E353.2	EPLN
					SM2320B	EPLN
					SM4500PE	EPLN
					SW6010C	EPLN
					SW8011	EPLN

Appendix G-1 - Table 1. Summary of Samples Collected, Sample Date, Sample Location, Analysis Method, and Sample Delivery Group

Sample Date	SDG	Location	Sample ID	Sample Type	Analytic Method	Lab
11/15/2017	KAFB_005	KAFB-106MW1-I	106MW1I-P1P-111517	REG	SW8260B	EPLN
	KAFB_005	KAFB-106MW1-I	106MW1I-P1P-111517	REG	SW9056A	EPLN
11/15/2017		KAFB-106MW1-S	106MW1S-P1P-111517	REG	E353.2	EPLN
					SM2320B	EPLN
					SM4500PE	EPLN
					SW6010C	EPLN
		KAFB-106MW1-S	106MW1S-P1P-111517	REG	SW8011	EPLN
					SW8260B	EPLN
					SW9056A	EPLN
		KAFB-106MW2-I	106MW2I-P1P-111517	REG	E353.2	EPLN
					SM2320B	EPLN
					SM4500PE	EPLN
					SW6010C	EPLN
					SW8011	EPLN
					SW8260B	EPLN
					SW9056A	EPLN
	USGS	KAFB-106063	106063-P1P-111517	REG	IRMS	USGS
		KAFB-106064	106064-P1P-111517	REG	IRMS	USGS
		KAFB-106MW1-I	106MW1I-P1P-111517	REG	IRMS	USGS
		KAFB-106MW1-S	106MW1S-P1P-111517	REG	IRMS	USGS
		KAFB-106MW2-I	106MW2I-P1P-111517	REG	IRMS	USGS
11/16/2017	160-25627-1	KAFB-106EX1	106EX1-P1P-111617	REG	E300	TASTL
		KAFB-106EX2	106EX2-P1P-111617	REG	E300	TASTL
		KAFB-106IN1	106IN1-P1P-111617	REG	E300	TASTL
			106IN1-P1P-111617-FD	FD	E300	TASTL
		KAFB-106MW2-S	106MW2S-P1P-111617	REG	E300	TASTL
	9762	KAFB-106EX1	106EX1-P1P-111617	REG	E300M	APTIM
					RSK-175	APTIM
		KAFB-106EX2	106EX2-P1P-111617	REG	E300M	APTIM
					RSK-175	APTIM
		KAFB-106IN1	106IN1-P1P-111617	REG	E300M	APTIM
					RSK-175	APTIM
			106IN1-P1P-111617-FD	FD	E300M	APTIM
					RSK-175	APTIM
		KAFB-106MW2-S	106MW2S-P1P-111617	REG	E300M	APTIM
					RSK-175	APTIM
	FLUOR	KAFB-106EX1	106EX1-P1P-111617	REG	FLUORIMETRIC	CHL
		KAFB-106EX2	106EX2-P1P-111617	REG	FLUORIMETRIC	CHL
		KAFB-106IN1	106IN1-P1P-111617	REG	FLUORIMETRIC	CHL
		KAFB-106MW2-S	106MW2S-P1P-111617	REG	FLUORIMETRIC	CHL
	KAFB_005	KAFB-106EX1	106EX1-P1P-111617	REG	E353.2	EPLN
					SM2320B	EPLN
					SM4500PE	EPLN
					SW6010C	EPLN
					SW8011	EPLN

Appendix G-1 - Table 1. Summary of Samples Collected, Sample Date, Sample Location, Analysis Method, and Sample Delivery Group

Sample Date	SDG	Location	Sample ID	Sample Type	Analytic Method	Lab
11/16/2017	KAFB_005	KAFB-106EX1	106EX1-P1P-111617	REG	SW8260B	EPLN
					SW9056A	EPLN
11/16/2017	KAFB_005	KAFB-106EX2	106EX2-P1P-111617	REG	E353.2	EPLN
					SM2320B	EPLN
11/16/2017					SM4500PE	EPLN
					SW6010C	EPLN
					SW8011	EPLN
					SW8260B	EPLN
					SW9056A	EPLN
		KAFB-106IN1	106IN1-P1P-111617	REG	E353.2	EPLN
					SM2320B	EPLN
					SM4500PE	EPLN
					SW6010C	EPLN
					SW8011	EPLN
					SW8260B	EPLN
					SW9056A	EPLN
	KAFB_005		106IN1-P1P-111617-FD	FD	E353.2	EPLN
					SM2320B	EPLN
					SM4500PE	EPLN
					SW6010C	EPLN
					SW8011	EPLN
					SW8260B	EPLN
					SW9056A	EPLN
		KAFB-106MW2-S	106MW2S-P1P-111617	REG	E353.2	EPLN
					SM2320B	EPLN
					SM4500PE	EPLN
					SW6010C	EPLN
					SW8011	EPLN
					SW8260B	EPLN
					SW9056A	EPLN
	USGS	KAFB-106EX1	106EX1-P1P-111617	REG	IRMS	USGS
		KAFB-106EX2	106EX2-P1P-111617	REG	IRMS	USGS
		KAFB-106IN1	106IN1-P1P-111617	REG	IRMS	USGS
			106IN1-P1P-111617-FD	FD	IRMS	USGS
		KAFB-106MW2-S	106MW2S-P1P-111617	REG	IRMS	USGS
11/28/2017	160-25791-1	KAFB-106063	106063-P1P-112817	REG	E300	TASTL
		KAFB-106064	106064-P1P-112817	REG	E300	TASTL
		KAFB-106MW1-I	106MW1I-P1P-112817	REG	E300	TASTL
		KAFB-106MW1-S	106MW1S-P1P-112817	REG	E300	TASTL
		KAFB-106MW2-S	106MW2S-P1P-112817	REG	E300	TASTL
	6_106OK	KAFB-106063	106063-P1P-112817	REG	QUANTARRAY	MI
		KAFB-106064	106064-P1P-112817	REG	QUANTARRAY	MI
		KAFB-106MW1-I	106MW1I-P1P-112817	REG	QUANTARRAY	MI
11/28/2017		KAFB-106MW1-S	106MW1S-P1P-112817	REG	QUANTARRAY	MI
		KAFB-106MW2-S	106MW2S-P1P-112817	REG	QUANTARRAY	MI

Appendix G-1 - Table 1. Summary of Samples Collected, Sample Date, Sample Location, Analysis Method, and Sample Delivery Group

Sample Date	SDG	Location	Sample ID	Sample Type	Analytic Method	Lab
11/28/2017	9764	KAFB-106063	106063-P1P-112817	REG	E300M	APTIM
					RSK-175	APTIM
		KAFB-106064	106064-P1P-112817	REG	E300M	APTIM
11/28/2017	9764	KAFB-106064	106064-P1P-112817	REG	RSK-175	APTIM
		KAFB-106MW1-I	106MW1I-P1P-112817	REG	E300M	APTIM
					RSK-175	APTIM
		KAFB-106MW1-S	106MW1S-P1P-112817	REG	E300M	APTIM
					RSK-175	APTIM
		KAFB-106MW2-S	106MW2S-P1P-112817	REG	E300M	APTIM
					RSK-175	APTIM
	FLUOR	KAFB-106063	106063-P1P-112817	REG	FLUORIMETRIC	CHL
		KAFB-106064	106064-P1P-112817	REG	FLUORIMETRIC	CHL
		KAFB-106MW1-I	106MW1I-P1P-112817	REG	FLUORIMETRIC	CHL
11/28/2017	FLUOR	KAFB-106MW1-S	106MW1S-P1P-112817	REG	FLUORIMETRIC	CHL
		KAFB-106MW2-S	106MW2S-P1P-112817	REG	FLUORIMETRIC	CHL
	KAFB_006	KAFB-106063	106063-P1P-112817	REG	E353.2	EPLN
					SM2320B	EPLN
					SM4500PE	EPLN
					SW6010C	EPLN
					SW8011	EPLN
					SW8260B	EPLN
					SW9056A	EPLN
		KAFB-106064	106064-P1P-112817	REG	E353.2	EPLN
					SM2320B	EPLN
					SM4500PE	EPLN
					SW6010C	EPLN
					SW8011	EPLN
					SW8260B	EPLN
					SW9056A	EPLN
		KAFB-106MW1-I	106MW1I-P1P-112817	REG	E353.2	EPLN
					SM2320B	EPLN
					SM4500PE	EPLN
					SW6010C	EPLN
					SW8011	EPLN
					SW8260B	EPLN
					SW9056A	EPLN
		KAFB-106MW1-S	106MW1S-P1P-112817	REG	E353.2	EPLN
					SM2320B	EPLN
					SM4500PE	EPLN
					SW6010C	EPLN
					SW8011	EPLN
					SW8260B	EPLN
					SW9056A	EPLN
		KAFB-106MW2-S	106MW2S-P1P-112817	REG	E353.2	EPLN
					SM2320B	EPLN
					SM4500PE	EPLN

Appendix G-1 - Table 1. Summary of Samples Collected, Sample Date, Sample Location, Analysis Method, and Sample Delivery Group

Sample Date	SDG	Location	Sample ID	Sample Type	Analytic Method	Lab
11/28/2017	KAFB_006	KAFB-106MW2-S	106MW2S-P1P-112817	REG	SW6010C	EPLN
					SW8011	EPLN
					SW8260B	EPLN
					SW9056A	EPLN
	USGS	KAFB-106063	106063-P1P-112817	REG	IRMS	USGS
		KAFB-106064	106064-P1P-112817	REG	IRMS	USGS
		KAFB-106MW1-I	106MW1I-P1P-112817	REG	IRMS	USGS
		KAFB-106MW1-S	106MW1S-P1P-112817	REG	IRMS	USGS
		KAFB-106MW2-S	106MW2S-P1P-112817	REG	IRMS	USGS
11/29/2017	160-25791-1	KAFB-106EX1	106EX1-P1P-112917	REG	E300	TASTL
		KAFB-106EX2	106EX2-P1P-112917	REG	E300	TASTL
		KAFB-106IN1	106IN1-P1P-112917	REG	E300	TASTL
		KAFB-106MW2-I	106MW2I-P1P-112917	REG	E300	TASTL
			106MW2I-P1P-112917-FD	FD	E300	TASTL
	6_106OK	KAFB-106EX1	106EX1-P1P-112917	REG	QUANTARRAY	MI
		KAFB-106EX2	106EX2-P1P-112917	REG	QUANTARRAY	MI
		KAFB-106IN1	106IN1-P1P-112917	REG	QUANTARRAY	MI
		KAFB-106MW2-I	106MW2I-P1P-112917	REG	QUANTARRAY	MI
	9765	KAFB-106EX1	106EX1-P1P-112917	REG	E300M	APTIM
					RSK-175	APTIM
		KAFB-106EX2	106EX2-P1P-112917	REG	E300M	APTIM
					RSK-175	APTIM
		KAFB-106IN1	106IN1-P1P-112917	REG	E300M	APTIM
					RSK-175	APTIM
		KAFB-106MW2-I	106MW2I-P1P-112917	REG	E300M	APTIM
					RSK-175	APTIM
			106MW2I-P1P-112917-FD	FD	E300M	APTIM
					RSK-175	APTIM
	FLUOR	KAFB-106EX1	106EX1-P1P-112917	REG	FLUORIMETRIC	CHL
		KAFB-106EX2	106EX2-P1P-112917	REG	FLUORIMETRIC	CHL
		KAFB-106IN1	106IN1-P1P-112917	REG	FLUORIMETRIC	CHL
		KAFB-106MW2-I	106MW2I-P1P-112917	REG	FLUORIMETRIC	CHL
	KAFB_006	KAFB-106EX1	106EX1-P1P-112917	REG	E353.2	EPLN
					SM2320B	EPLN
					SM4500PE	EPLN
					SW6010C	EPLN
					SW8011	EPLN
					SW8260B	EPLN
					SW9056A	EPLN

Appendix G-1 - Table 1. Summary of Samples Collected, Sample Date, Sample Location, Analysis Method, and Sample Delivery Group

Sample Date	SDG	Location	Sample ID	Sample Type	Analytic Method	Lab
11/29/2017	KAFB_006	KAFB-106EX2	106EX2-P1P-112917	REG	E353.2	EPLN
					SM2320B	EPLN
					SM4500PE	EPLN
					SW6010C	EPLN
					SW8011	EPLN
					SW8260B	EPLN
					SW9056A	EPLN
		KAFB-106IN1	106IN1-P1P-112917	REG	E353.2	EPLN
					SM2320B	EPLN
					SM4500PE	EPLN
					SW6010C	EPLN
					SW8011	EPLN
					SW8260B	EPLN
					SW9056A	EPLN
		KAFB-106MW2-I	106MW2I-P1P-112917	REG	E353.2	EPLN
					SM2320B	EPLN
					SM4500PE	EPLN
					SW6010C	EPLN
					SW8011	EPLN
					SW8260B	EPLN
					SW9056A	EPLN
			106MW2I-P1P-112917-FD	FD	E353.2	EPLN
					SM2320B	EPLN
					SM4500PE	EPLN
					SW6010C	EPLN
					SW8011	EPLN
					SW8260B	EPLN
					SW9056A	EPLN
	USGS	KAFB-106EX1	106EX1-P1P-112917	REG	IRMS	USGS
		KAFB-106EX2	106EX2-P1P-112917	REG	IRMS	USGS
		KAFB-106IN1	106IN1-P1P-112917	REG	IRMS	USGS
		KAFB-106MW2-I	106MW2I-P1P-112917	REG	IRMS	USGS
			106MW2I-P1P-112917-FD	FD	IRMS	USGS
01/02/2018	160-26240-1	KAFB-106IN1	106IN1-P2R-010218-01	REG	E300	TASTL
			106IN1-P2R-010218-02	REG	E300	TASTL
	9767	KAFB-106IN1	106IN1-P2R-010218-02	REG	E300M	APTIM
1/9/2018	160-26240-1	KAFB-106MW1-I	106MW1I-P2R-010918	REG	E300	TASTL
		KAFB-106MW1-S	106MW1S-P2R-010918	REG	E300	TASTL
		KAFB-106MW2-I	106MW2I-P2R-010918	REG	E300	TASTL
		KAFB-106MW2-S	106MW2S-P2R-010918	REG	E300	TASTL
	9768	KAFB-106MW1-I	106MW1I-P2R-010918	REG	E300M	APTIM
					RSK-175	APTIM
		KAFB-106MW1-S	106MW1S-P2R-010918	REG	E300M	APTIM
					RSK-175	APTIM

Appendix G-1 - Table 1. Summary of Samples Collected, Sample Date, Sample Location, Analysis Method, and Sample Delivery Group

Sample Date	SDG	Location	Sample ID	Sample Type	Analytic Method	Lab
1/9/2018	9768	KAFB-106MW2-I	106MW2I-P2R-010918	REG	E300M	APTIM
					RSK-175	APTIM
		KAFB-106MW2-S	106MW2S-P2R-010918	REG	E300M	APTIM
					RSK-175	APTIM
	KAFB_007	KAFB-106MW1-I	106MW1I-P2R-010918	REG	E353.2	EPLN
					SM2320B	EPLN
					SM4500PE	EPLN
					SW6010C	EPLN
					SW8011	EPLN
					SW8260B	EPLN
					SW9056A	EPLN
		KAFB-106MW1-S	106MW1S-P2R-010918	REG	E353.2	EPLN
					SM2320B	EPLN
					SM4500PE	EPLN
					SW6010C	EPLN
					SW8011	EPLN
					SW8260B	EPLN
					SW9056A	EPLN
		KAFB-106MW2-I	106MW2I-P2R-010918	REG	E353.2	EPLN
					SM2320B	EPLN
					SM4500PE	EPLN
					SW6010C	EPLN
					SW8011	EPLN
					SW8260B	EPLN
					SW9056A	EPLN
		KAFB-106MW2-S	106MW2S-P2R-010918	REG	E353.2	EPLN
					SM2320B	EPLN
					SM4500PE	EPLN
					SW6010C	EPLN
					SW8011	EPLN
					SW8260B	EPLN
					SW9056A	EPLN
1/10/2018		KAFB-106IN1	106IN1-P2R-011018	REG		
	160-26240-1	KAFB-106063	106063-P2R-011018	REG	E300	TASTL
		KAFB-106064	106064-P2R-011018	REG	E300	TASTL
		KAFB-106EX1	106EX1-P2R-011018	REG	E300	TASTL
		KAFB-106EX2	106EX2-P2R-011018	REG	E300	TASTL
			106EX2-P2R-011018-FD	FD	E300	TASTL
		KAFB-106IN1	106IN1-P2R-011018-03	REG	E300	TASTL
	9769	KAFB-106063	106063-P2R-011018	REG	E300M	APTIM
					RSK-175	APTIM
		KAFB-106064	106064-P2R-011018	REG	E300M	APTIM
					RSK-175	APTIM
		KAFB-106EX1	106EX1-P2R-011018	REG	E300M	APTIM
					RSK-175	APTIM
		KAFB-106EX2	106EX2-P2R-011018	REG	E300M	APTIM
					RSK-175	APTIM
			106EX2-P2R-011018-FD	FD	E300M	APTIM
					RSK-175	APTIM
1/10/2018	9769	KAFB-106IN1	106IN1-P2R-011018-03	REG	E300M	APTIM
	KAFB_007	KAFB-106063	106063-P2R-011018	REG	E353.2	EPLN
					SM2320B	EPLN
					SM4500PE	EPLN

Appendix G-1 - Table 1. Summary of Samples Collected, Sample Date, Sample Location, Analysis Method, and Sample Delivery Group

Sample Date	SDG	Location	Sample ID	Sample Type	Analytic Method	Lab
1/10/2018	KAFB_007	KAFB-106063	106063-P2R-011018	REG	SW6010C	EPLN
1/10/2018	KAFB_007	KAFB-106063	106063-P2R-011018	REG	SW8011	EPLN
					SW8260B	EPLN
					SW9056A	EPLN
		KAFB-106064	106064-P2R-011018	REG	E353.2	EPLN
					SM2320B	EPLN
					SM4500PE	EPLN
					SW6010C	EPLN
					SW8011	EPLN
					SW8260B	EPLN
					SW9056A	EPLN
		KAFB-106EX1	106EX1-P2R-011018	REG	E353.2	EPLN
					SM2320B	EPLN
					SM4500PE	EPLN
					SW6010C	EPLN
					SW8011	EPLN
					SW8260B	EPLN
					SW9056A	EPLN
		KAFB-106EX2	106EX2-P2R-011018	REG	E353.2	EPLN
					SM2320B	EPLN
					SM4500PE	EPLN
					SW6010C	EPLN
					SW8011	EPLN
					SW8260B	EPLN
					SW9056A	EPLN
			106EX2-P2R-011018-FD	FD	E353.2	EPLN
					SM2320B	EPLN
					SM4500PE	EPLN
					SW6010C	EPLN
					SW8011	EPLN
					SW8260B	EPLN
					SW9056A	EPLN
1/16/2018	160-26240-1	KAFB-106EX1	106EX1-P2R-011618	REG	E300	TASTL
			106EX1-P2R-011618-FD	FD	E300	TASTL
		KAFB-106EX2	106EX2-P2R-011618	REG	E300	TASTL
		KAFB-106MW1-I	106MW1I-P2R-011618	REG	E300	TASTL
		KAFB-106MW2-S	106MW2S-P2R-011618	REG	E300	TASTL
	9772	KAFB-106EX1	106EX1-P2R-011618	REG	E300M	APTIM
					RSK-175	APTIM
			106EX1-P2R-011618-FD	FD	E300M	APTIM
					RSK-175	APTIM
		KAFB-106EX2	106EX2-P2R-011618	REG	E300M	APTIM
					RSK-175	APTIM
		KAFB-106MW1-I	106MW1I-P2R-011618	REG	E300M	APTIM
					RSK-175	APTIM
		KAFB-106MW2-S	106MW2S-P2R-011618	REG	E300M	APTIM
					RSK-175	APTIM

Appendix G-1 - Table 1. Summary of Samples Collected, Sample Date, Sample Location, Analysis Method, and Sample Delivery Group

Sample Date	SDG	Location	Sample ID	Sample Type	Analytic Method	Lab
1/16/2018	KAFB_008	KAFB-106EX1	106EX1-P2R-011618	REG	E353.2	EPLN
					SM2320B	EPLN
					SM4500PE	EPLN
					SW6010C	EPLN
					SW8011	EPLN
					SW8260B	EPLN
					SW9056A	EPLN
			106EX1-P2R-011618-FD	FD	E353.2	EPLN
					SM2320B	EPLN
					SM4500PE	EPLN
					SW6010C	EPLN
					SW8011	EPLN
					SW8260B	EPLN
					SW9056A	EPLN
		KAFB-106EX2	106EX2-P2R-011618	REG	E353.2	EPLN
					SM2320B	EPLN
					SM4500PE	EPLN
					SW6010C	EPLN
					SW8011	EPLN
					SW8260B	EPLN
					SW9056A	EPLN
		KAFB-106MW1-I	106MW1I-P2R-011618	REG	E353.2	EPLN
					SM2320B	EPLN
					SM4500PE	EPLN
					SW6010C	EPLN
					SW8011	EPLN
					SW8260B	EPLN
					SW9056A	EPLN
		KAFB-106MW2-S	106MW2S-P2R-011618	REG	E353.2	EPLN
					SM2320B	EPLN
					SM4500PE	EPLN
					SW6010C	EPLN
					SW8011	EPLN
					SW8260B	EPLN
					SW9056A	EPLN
1/18/2018	160-26240-1	KAFB-106063	106063-P2R-011818	REG	E300	TASTL
		KAFB-106064	106064-P2R-011818	REG	E300	TASTL
		KAFB-106MW1-S	106MWIS-P2R-011818	REG	E300	TASTL
		KAFB-106MW2-I	106MW2I-P2R-011818	REG	E300	TASTL
	9775	KAFB-106063	106063-P2R-011818	REG	E300M	APTIM
					RSK-175	APTIM
		KAFB-106064	106064-P2R-011818	REG	E300M	APTIM
					RSK-175	APTIM
		KAFB-106MW1-S	106MW1S-P2R-011818	REG	E300M	APTIM
					RSK-175	APTIM
		KAFB-106MW2-I	106MW2I-P2R-011818	REG	E300M	APTIM
					RSK-175	APTIM
	KAFB_008	KAFB-106063	106063-P2R-011818	REG	E353.2	EPLN
					SM2320B	EPLN
					SM4500PE	EPLN
					SW6010C	EPLN
					SW8011	EPLN
					SW8260B	EPLN
					SW9056A	EPLN

Appendix G-1 - Table 1. Summary of Samples Collected, Sample Date, Sample Location, Analysis Method, and Sample Delivery Group

Sample Date	SDG	Location	Sample ID	Sample Type	Analytic Method	Lab
1/18/2018	KAFB_008	KAFB-106064	106064-P2R-011818	REG	E353.2	EPLN
					SM2320B	EPLN
					SM4500PE	EPLN
					SW6010C	EPLN
					SW8011	EPLN
					SW8260B	EPLN
					SW9056A	EPLN
		KAFB-106MW1-S	106MW1S-P2R-011818	REG	E353.2	EPLN
					SM2320B	EPLN
					SM4500PE	EPLN
					SW6010C	EPLN
					SW8011	EPLN
					SW8260B	EPLN
					SW9056A	EPLN
		KAFB-106MW2-I	106MW2I-P2R-011818	REG	E353.2	EPLN
					SM2320B	EPLN
					SM4500PE	EPLN
					SW6010C	EPLN
					SW8011	EPLN
					SW8260B	EPLN
					SW9056A	EPLN
1/24/2018	160-26515-1	KAFB-106IN1	106IN1-P2R-012418-04	REG	E300	TASTL
		KAFB-106MW1-I	106MW1I-P2R-012418	REG	E300	TASTL
			106MW1I-P2R-012418-FD	FD	E300	TASTL
		KAFB-106MW1-S	106MW1S-P2R-012418	REG	E300	TASTL
		KAFB-106MW2-I	106MW2I-P2R-012418	REG	E300	TASTL
		KAFB-106MW2-S	106MW2S-P2R-012418	REG	E300	TASTL
	59_055pa	KAFB-106MW1-I	106MW1I-P2R-012418	REG	QUANTARRAY	MI
		KAFB-106MW1-S	106MW1S-P2R-012418	REG	QUANTARRAY	MI
		KAFB-106MW2-I	106MW2I-P2R-012418	REG	QUANTARRAY	MI
		KAFB-106MW2-S	106MW2S-P2R-012418	REG	QUANTARRAY	MI
	9777	KAFB-106IN1	106IN1-P2R-012418	REG	E300M	APTIM
		KAFB-106MW1-I	106MW1I-P2R-012418	REG	E300M	APTIM
					RSK-175	APTIM
			106MW1I-P2R-012418-FD	FD	E300M	APTIM
					RSK-175	APTIM
		KAFB-106MW1-S	106MW1S-P2R-012418	REG	E300M	APTIM
					RSK-175	APTIM
		KAFB-106MW2-I	106MW2I-P2R-012418	REG	E300M	APTIM
					RSK-175	APTIM
		KAFB-106MW2-S	106MW2S-P2R-012418	REG	E300M	APTIM
					RSK-175	APTIM
	KAFB_009	KAFB-106IN1	106IN1-P2R-012418-04	REG	SM4500PE	EPLN
		KAFB-106MW1-I	106MW1I-P2R-012418	REG	E353.2	EPLN
					SM2320B	EPLN
					SM4500PE	EPLN
1/24/2018	KAFB_009				SW6010C	EPLN
					SW8011	EPLN
					SW8260B	EPLN

Appendix G-1 - Table 1. Summary of Samples Collected, Sample Date, Sample Location, Analysis Method, and Sample Delivery Group

Sample Date	SDG	Location	Sample ID	Sample Type	Analytic Method	Lab
					SW9056A	EPLN
1/24/2018	KAFB_009	KAFB-106MW1-I	106MW1I-P2R-012418-FD	FD	E353.2	EPLN
					SM2320B	EPLN
					SM4500PE	EPLN
					SW6010C	EPLN
					SW8011	EPLN
					SW8260B	EPLN
					SW9056A	EPLN
		KAFB-106MW1-S	106MW1S-P2R-012418	REG	E353.2	EPLN
					SM2320B	EPLN
					SM4500PE	EPLN
					SW6010C	EPLN
					SW8011	EPLN
					SW8260B	EPLN
					SW9056A	EPLN
		KAFB-106MW2-I	106MW2I-P2R-012418	REG	E353.2	EPLN
					SM2320B	EPLN
					SM4500PE	EPLN
					SW6010C	EPLN
					SW8011	EPLN
					SW8260B	EPLN
					SW9056A	EPLN
		KAFB-106MW2-S	106MW2S-P2R-012418	REG	E353.2	EPLN
					SM2320B	EPLN
					SM4500PE	EPLN
					SW6010C	EPLN
					SW8011	EPLN
					SW8260B	EPLN
					SW9056A	EPLN
1/25/2018	160-26515-1	KAFB-106063	106063-P2R-012518	REG	E300	TASTL
		KAFB-106064	106064-P2R-012518	REG	E300	TASTL
		KAFB-106EX1	106EX1-P2R-012518	REG	E300	TASTL
		KAFB-106EX2	106EX2-P2R-012518	REG	E300	TASTL
	59_055pa	KAFB-106063	106063-P2R-012518	REG	QUANTARRAY	MI
		KAFB-106064	106064-P2R-012518	REG	QUANTARRAY	MI
		KAFB-106EX1	106EX1-P2R-012518	REG	QUANTARRAY	MI
		KAFB-106EX2	106EX2-P2R-012518	REG	QUANTARRAY	MI
	9778	KAFB-106063	106063-P2R-012518	REG	E300M	APTIM
					RSK-175	APTIM
		KAFB-106064	106064-P2R-012518	REG	E300M	APTIM
					RSK-175	APTIM
		KAFB-106EX1	106EX1-P2R-012518	REG	E300M	APTIM
					RSK-175	APTIM
		KAFB-106EX2	106EX2-P2R-012518	REG	E300M	APTIM
					RSK-175	APTIM

Appendix G-1 - Table 1. Summary of Samples Collected, Sample Date, Sample Location, Analysis Method, and Sample Delivery Group

Sample Date	SDG	Location	Sample ID	Sample Type	Analytic Method	Lab
1/25/2018	KAFB_009	KAFB-106063	106063-P2R-012518	REG	E353.2	EPLN
					SM2320B	EPLN
					SM4500PE	EPLN
					SW6010C	EPLN
					SW8011	EPLN
					SW8260B	EPLN
					SW9056A	EPLN
		KAFB-106064	106064-P2R-012518	REG	E353.2	EPLN
					SM2320B	EPLN
					SM4500PE	EPLN
					SW6010C	EPLN
					SW8011	EPLN
					SW8260B	EPLN
					SW9056A	EPLN
		KAFB-106EX1	106EX1-P2R-012518	REG	E353.2	EPLN
					SM2320B	EPLN
					SM4500PE	EPLN
					SW6010C	EPLN
					SW8011	EPLN
					SW8260B	EPLN
					SW9056A	EPLN
		KAFB-106EX2	106EX2-P2R-012518	REG	E353.2	EPLN
					SM2320B	EPLN
					SM4500PE	EPLN
					SW6010C	EPLN
					SW8011	EPLN
					SW8260B	EPLN
					SW9056A	EPLN
3/6/2018	160-27155-1	KAFB-106063	106063-P2P-030618	REG	E300	TASTL
		KAFB-106MW1-I	106MW1I-P2P-030618	REG	E300	TASTL
		KAFB-106MW1-S	106MW1S-P2P-030618	REG	E300	TASTL
		KAFB-106MW2-I	106MW2I-P2P-030618	REG	E300	TASTL
			106MW2I-P2P-030618-FD	FD	E300	TASTL
	9788	KAFB-106063	106063-P2P-030618	REG	E300M	APTIM
					RSK-175	APTIM
		KAFB-106MW1-I	106MW1I-P2P-030618	REG	E300M	APTIM
					RSK-175	APTIM
		KAFB-106MW1-S	106MW1S-P2P-030618	REG	E300M	APTIM
					RSK-175	APTIM
		KAFB-106MW2-I	106MW2I-P2P-030618	REG	E300M	APTIM
					RSK-175	APTIM
			106MW2I-P2P-030618-FD	FD	E300M	APTIM
					RSK-175	APTIM
	KAFB_010	KAFB-106063	106063-P2P-030618	REG	E353.2	EPLN
					SM2320B	EPLN
					SM4500PE	EPLN
					SW6010C	EPLN
					SW8011	EPLN
					SW8260B	EPLN
					SW9056A	EPLN
		KAFB-106MW1-I	106MW1I-P2P-030618	REG	E353.2	EPLN
					SM2320B	EPLN
					SM4500PE	EPLN

Appendix G-1 - Table 1. Summary of Samples Collected, Sample Date, Sample Location, Analysis Method, and Sample Delivery Group

Sample Date	SDG	Location	Sample ID	Sample Type	Analytic Method	Lab
3/6/2018	KAFB_010	KAFB-106MW1-I	106MW1I-P2P-030618	REG	SW6010C	EPLN
					SW8011	EPLN
					SW8260B	EPLN
					SW9056A	EPLN
		KAFB-106MW1-S	106MW1S-P2P-030618	REG	E353.2	EPLN
					SM2320B	EPLN
					SM4500PE	EPLN
					SW6010C	EPLN
					SW8011	EPLN
					SW8260B	EPLN
					SW9056A	EPLN
		KAFB-106MW2-I	106MW2I-P2P-030618	REG	E353.2	EPLN
					SM2320B	EPLN
					SM4500PE	EPLN
					SW6010C	EPLN
					SW8011	EPLN
					SW8260B	EPLN
					SW9056A	EPLN
			106MW2I-P2P-030618-FD	FD	E353.2	EPLN
					SM2320B	EPLN
					SM4500PE	EPLN
					SW6010C	EPLN
					SW8011	EPLN
					SW8260B	EPLN
					SW9056A	EPLN
3/7/2018	160-27155-1	KAFB-106064	106064-P2P-030718	REG	E300	TASTL
		KAFB-106EX1	106EX1-P2P-030718	REG	E300	TASTL
		KAFB-106EX2	106EX2-P2P-030718	REG	E300	TASTL
		KAFB-106IN1	106IN1-P2P-030718	REG	E300	TASTL
		KAFB-106MW2-S	106MW2S-P2P-030718	REG	E300	TASTL
	9788	KAFB-106064	106064-P2P-030718	REG	E300M	APTIM
					RSK-175	APTIM
		KAFB-106EX1	106EX1-P2P-030718	REG	E300M	APTIM
					RSK-175	APTIM
		KAFB-106EX2	106EX2-P2P-030718	REG	E300M	APTIM
					RSK-175	APTIM
		KAFB-106IN1	106IN1-P2P-030718	REG	E300M	APTIM
					RSK-175	APTIM
		KAFB-106MW2-S	106MW2S-P2P-030718	REG	E300M	APTIM
					RSK-175	APTIM
	KAFB_010	KAFB-106064	106064-P2P-030718	REG	E353.2	EPLN
					SM2320B	EPLN
					SM4500PE	EPLN
					SW6010C	EPLN
					SW8011	EPLN
					SW8260B	EPLN
					SW9056A	EPLN
		KAFB-106EX1	106EX1-P2P-030718	REG	E353.2	EPLN
					SM2320B	EPLN
					SM4500PE	EPLN
					SW6010C	EPLN
					SW8011	EPLN
					SW8260B	EPLN
					SW9056A	EPLN

Appendix G-1 - Table 1. Summary of Samples Collected, Sample Date, Sample Location, Analysis Method, and Sample Delivery Group

Sample Date	SDG	Location	Sample ID	Sample Type	Analytic Method	Lab
3/7/2018	KAFB_010	KAFB-106EX2	106EX2-P2P-030718	REG	E353.2	EPLN
					SM2320B	EPLN
					SM4500PE	EPLN
					SW6010C	EPLN
					SW8011	EPLN
					SW8260B	EPLN
					SW9056A	EPLN
		KAFB-106IN1	106IN1-P2P-030718	REG	E353.2	EPLN
					SM2320B	EPLN
					SM4500PE	EPLN
					SW6010C	EPLN
					SW8011	EPLN
					SW8260B	EPLN
					SW9056A	EPLN
		KAFB-106MW2-S	106MW2S-P2P-030718	REG	E353.2	EPLN
					SM2320B	EPLN
					SM4500PE	EPLN
					SW6010C	EPLN
					SW8011	EPLN
					SW8260B	EPLN
					SW9056A	EPLN
4/10/2018	160-27760-1	KAFB-106063	106063-P2P-041018	REG	E300	TASTL
		KAFB-106064	106064-P2P-041018	REG	E300	TASTL
		KAFB-106MW1-I	106MW1I-P2P-041018	REG	E300	TASTL
		KAFB-106MW2-S	106MW2S-P2P-041018	REG	E300	TASTL
			106MW2S-P2P-041018-FD	FD	E300	TASTL
	9798	KAFB-106063	106063-P2P-041018	REG	E300M	APTIM
					RSK-175	APTIM
		KAFB-106064	106064-P2P-041018	REG	E300M	APTIM
					RSK-175	APTIM
		KAFB-106MW1-I	106MW1I-P2P-041018	REG	E300M	APTIM
					RSK-175	APTIM
		KAFB-106MW2-S	106MW2S-P2P-041018	REG	E300M	APTIM
					RSK-175	APTIM
			106MW2S-P2P-041018-FD	FD	E300M	APTIM
					RSK-175	APTIM
	KAFB_011	KAFB-106063	106063-P2P-041018	REG	SM2320B	EPLN
					SM4500PE	EPLN
					SW6010C	EPLN
					SW8011	EPLN
					SW8260B	EPLN
					SW9056A	EPLN
		KAFB-106064	106064-P2P-041018	REG	SM2320B	EPLN
					SM4500PE	EPLN
					SW6010C	EPLN
					SW8011	EPLN
					SW8260B	EPLN
					SW9056A	EPLN
		KAFB-106MW1-I	106MW1I-P2P-041018	REG	SM2320B	EPLN
					SM4500PE	EPLN
					SW6010C	EPLN
					SW8011	EPLN
					SW8260B	EPLN
					SW9056A	EPLN
4/10/2018	KAFB_011	KAFB-106MW2-S	106MW2S-P2P-041018	REG	SM2320B	EPLN
					SM4500PE	EPLN

Appendix G-1 - Table 1. Summary of Samples Collected, Sample Date, Sample Location, Analysis Method, and Sample Delivery Group

Sample Date	SDG	Location	Sample ID	Sample Type	Analytic Method	Lab
4/10/2018	KAFB_011	KAFB-106MW2-S	106MW2S-P2P-041018	REG	SW6010C	EPLN
4/10/2018	KAFB_011	KAFB-106MW2-S	106MW2S-P2P-041018	REG	SW8011	EPLN
					SW8260B	EPLN
					SW9056A	EPLN
			106MW2S-P2P-041018-FD	FD	SM2320B	EPLN
					SM4500PE	EPLN
					SW6010C	EPLN
					SW8011	EPLN
					SW8260B	EPLN
					SW9056A	EPLN
4/11/2018	160-27760-1	KAFB-106EX1	106EX1-P2P-041118	REG	E300	TASTL
		KAFB-106EX2	106EX2-P2P-041118	REG	E300	TASTL
		KAFB-106IN1	106IN1-P2P-041118	REG	E300	TASTL
		KAFB-106MW1-S	106MW1S-P2P-041118	REG	E300	TASTL
		KAFB-106MW2-I	106MW2I-P2P-041118	REG	E300	TASTL
	9799	KAFB-106EX1	106EX1-P2P-041118	REG	E300M	APTIM
					RSK-175	APTIM
		KAFB-106EX2	106EX2-P2P-041118	REG	E300M	APTIM
					RSK-175	APTIM
		KAFB-106IN1	106IN1-P2P-041118	REG	E300M	APTIM
					RSK-175	APTIM
		KAFB-106MW1-S	106MW1S-P2P-041118	REG	E300M	APTIM
					RSK-175	APTIM
		KAFB-106MW2-I	106MW2I-P2P-041118	REG	E300M	APTIM
					RSK-175	APTIM
	KAFB_011	KAFB-106EX1	106EX1-P2P-041118	REG	SM2320B	EPLN
					SM4500PE	EPLN
					SW6010C	EPLN
					SW8011	EPLN
					SW8260B	EPLN
					SW9056A	EPLN
		KAFB-106EX2	106EX2-P2P-04118	REG	SM2320B	EPLN
					SM4500PE	EPLN
					SW6010C	EPLN
					SW8011	EPLN
					SW8260B	EPLN
					SW9056A	EPLN
		KAFB-106IN1	106IN1-P2P-041118	REG	SM2320B	EPLN
					SM4500PE	EPLN
					SW6010C	EPLN
					SW8011	EPLN
					SW8260B	EPLN
					SW9056A	EPLN
		KAFB-106MW1-S	106MW1S-P2P-041118	REG	SM2320B	EPLN
					SM4500PE	EPLN
					SW6010C	EPLN
					SW8011	EPLN
					SW8260B	EPLN
					SW9056A	EPLN
		KAFB-106MW2-I	106MW2I-P2P-041118	REG	SM2320B	EPLN
					SM4500PE	EPLN
					SW6010C	EPLN
4/11/2018	KAFB_011	KAFB-106MW2-I	106MW2I-P2P-041118	REG	SW8011	EPLN
					SW8260B	EPLN
					SW9056A	EPLN

Appendix G-1 - Table 1. Summary of Samples Collected, Sample Date, Sample Location, Analysis Method, and Sample Delivery Group

Sample Date	SDG	Location	Sample ID	Sample Type	Analytic Method	Lab
05/08/2018	160-28253-1	KAFB-106063	106063-P2P-050818	REG	E300	TASTL
		KAFB-106MW1-I	106MW1I-P2P-050818	REG	E300	TASTL
		KAFB-106MW1-S	106MW1S-P2P-050818	REG	E300	TASTL
		KAFB-106MW2-I	106MW2I-P2P-050818	REG	E300	TASTL
	94_038PE	KAFB-106063	106063-P2P-050818	REG	QUANTARRAY	APTIM
		KAFB-106MW1-I	106MW1I-P2P-050818	REG	QUANTARRAY	APTIM
		KAFB-106MW1-S	106MW1S-P2P-050818	REG	QUANTARRAY	APTIM
		KAFB-106MW2-I	106MW2I-P2P-050818	REG	QUANTARRAY	APTIM
	9812	KAFB-106063	106063-P2P-050818	REG	E300M	APTIM
					RSK-175	APTIM
		KAFB-106MW1-I	106MW1I-P2P-050818	REG	E300M	APTIM
					RSK-175	APTIM
		KAFB-106MW1-S	106MW1S-P2P-050818	REG	E300M	APTIM
					RSK-175	APTIM
		KAFB-106MW2-I	106MW2I-P2P-050818	REG	E300M	APTIM
					RSK-175	APTIM
	KAFB_012	KAFB-106063	106063-P2P-050818	REG	SM2320B	EPLN
					SM4500PE	EPLN
					SW6010C	EPLN
					SW8011	EPLN
					SW8260B	EPLN
					SW9056A	EPLN
		KAFB-106MW1-I	106MW1I-P2P-050818	REG	SM2320B	EPLN
					SM4500PE	EPLN
					SW6010C	EPLN
					SW8011	EPLN
					SW8260B	EPLN
					SW9056A	EPLN
		KAFB-106MW1-S	106MW1S-P2P-050818	REG	SM2320B	EPLN
					SM4500PE	EPLN
					SW6010C	EPLN
					SW8011	EPLN
					SW8260B	EPLN
					SW9056A	EPLN
		KAFB-106MW2-I	106MW2I-P2P-050818	REG	SM2320B	EPLN
					SM4500PE	EPLN
					SW6010C	EPLN
					SW8011	EPLN
					SW8260B	EPLN
					SW9056A	EPLN
5/9/2018	160-28253-1	KAFB-106064	106064-P2P-050918	REG	E300	TASTL
			106064-P2P-050918-FD	FD	E300	TASTL
		KAFB-106EX1	106EX1-P2P-050918	REG	E300	TASTL
		KAFB-106EX2	106EX2-P2P-050918	REG	E300	TASTL
5/9/2018	160-28253-1	KAFB-106IN1	106IN1-P2P-050918	REG	E300	TASTL
		KAFB-106MW2-S	106MW2S-P2P-050918	REG	E300	TASTL

Appendix G-1 - Table 1. Summary of Samples Collected, Sample Date, Sample Location, Analysis Method, and Sample Delivery Group

Sample Date	SDG	Location	Sample ID	Sample Type	Analytic Method	Lab
	94_038PE	KAFB-106064	106064-P2P-050918	REG	QUANTARRAY	APTIM
5/9/2018	94_038PE	KAFB-106EX1	106EX1-P2P-050918	REG	QUANTARRAY	APTIM
	94_038PE	KAFB-106EX2	106EX2-P2P-050918	REG	QUANTARRAY	APTIM
		KAFB-106IN1	106IN1-P2P-050918	REG	QUANTARRAY	APTIM
		KAFB-106MW2-S	106MW2S-P2P-050918	REG	QUANTARRAY	APTIM
	9813	KAFB-106064	106064-P2P-050918	REG	E300M	APTIM
					RSK-175	APTIM
			106064-P2P-050918-FD	FD	E300M	APTIM
					RSK-175	APTIM
		KAFB-106EX1	106EX1-P2P-050918	REG	E300M	APTIM
					RSK-175	APTIM
		KAFB-106EX2	106EX2-P2P-050918	REG	E300M	APTIM
					RSK-175	APTIM
		KAFB-106IN1	106IN1-P2P-050918	REG	E300M	APTIM
					RSK-175	APTIM
		KAFB-106MW2-S	106MW2S-P2P-050918	REG	E300M	APTIM
					RSK-175	APTIM
	KAFB_012	KAFB-106064	106064-P2P-050918	REG	SM2320B	EPLN
					SM4500PE	EPLN
					SW6010C	EPLN
					SW8011	EPLN
					SW8260B	EPLN
					SW9056A	EPLN
			106064-P2P-050918-FD	FD	SM2320B	EPLN
					SM4500PE	EPLN
					SW6010C	EPLN
					SW8011	EPLN
					SW8260B	EPLN
					SW9056A	EPLN
		KAFB-106EX1	106EX1-P2P-050918	REG	SM2320B	EPLN
					SM4500PE	EPLN
					SW6010C	EPLN
					SW8011	EPLN
					SW8260B	EPLN
					SW9056A	EPLN
		KAFB-106EX2	106EX2-P2P-050918	REG	SM2320B	EPLN
					SM4500PE	EPLN
					SW6010C	EPLN
					SW8011	EPLN
					SW8260B	EPLN
					SW9056A	EPLN
		KAFB-106IN1	106IN1-P2P-050918	REG	SM2320B	EPLN
					SM4500PE	EPLN
					SW6010C	EPLN
					SW8011	EPLN
					SW8260B	EPLN
					SW9056A	EPLN
		KAFB-106MW2-S	106MW2S-P2P-050918	REG	SM2320B	EPLN
					SM4500PE	EPLN
					SW6010C	EPLN
	KAFB_012				SW8011	EPLN
					SW8260B	EPLN
					SW9056A	EPLN
6/12/2018	160-28933-1	KAFB-106063	106063-P2P-061218	REG	E300	TASTL

Appendix G-1 - Table 1. Summary of Samples Collected, Sample Date, Sample Location, Analysis Method, and Sample Delivery Group

Sample Date	SDG	Location	Sample ID	Sample Type	Analytic Method	Lab
6/12/2018	160-28933-1	KAFB-106MW1-I	106MW1I-P2P-061218	REG	E300	TASTL
		KAFB-106MW2-I	106MW2I-P2P-061218	REG	E300	TASTL
6/12/2018	9820	KAFB-106063	106063-P2P-061218	REG	E300M	APTIM
					RSK-175	APTIM
6/12/2018		KAFB-106MW1-I	106MW1I-P2P-061218	REG	E300M	APTIM
					RSK-175	APTIM
		KAFB-106MW2-I	106MW2I-P2P-061218	REG	E300M	APTIM
					RSK-175	APTIM
	KAFB_013	KAFB-106063	106063-P2P-061218	REG	SM2320B	EPLN
					SM4500PE	EPLN
					SW6010C	EPLN
					SW8011	EPLN
					SW8260B	EPLN
					SW9056A	EPLN
		KAFB-106MW1-I	106MW1I-P2P-061218	REG	SM2320B	EPLN
					SM4500PE	EPLN
					SW6010C	EPLN
					SW8011	EPLN
					SW8260B	EPLN
					SW9056A	EPLN
		KAFB-106MW2-I	106MW2I-P2P-061218	REG	SM2320B	EPLN
					SM4500PE	EPLN
					SW6010C	EPLN
					SW8011	EPLN
					SW8260B	EPLN
					SW9056A	EPLN
6/14/2018	160-28933-1	KAFB-106064	106064-P2P-061418	REG	E300	TASTL
			106064-P2P-061418-FD	FD	E300	TASTL
		KAFB-106EX1	106EX1-P2P-061418	REG	E300	TASTL
		KAFB-106EX2	106EX2-P2P-061418	REG	E300	TASTL
		KAFB-106IN1	106IN1-P2P-061418	REG	E300	TASTL
		KAFB-106MW1-S	106MW1S-P2P-061418	REG	E300	TASTL
		KAFB-106MW2-S	106MW2S-P2P-061418	REG	E300	TASTL
	9822	KAFB-106064	106064-P2P-061418	REG	E300M	APTIM
					RSK-175	APTIM
			106064-P2P-061418-FD	FD	E300M	APTIM
					RSK-175	APTIM
		KAFB-106EX1	106EX1-P2P-061418	REG	E300M	APTIM
					RSK-175	APTIM
		KAFB-106EX2	106EX2-P2P-061418	REG	E300M	APTIM
					RSK-175	APTIM
		KAFB-106IN1	106IN1-P2P-061418	REG	E300M	APTIM
					RSK-175	APTIM
		KAFB-106MW1-S	106MW1S-P2P-061418	REG	E300M	APTIM
					RSK-175	APTIM

Appendix G-1 - Table 1. Summary of Samples Collected, Sample Date, Sample Location, Analysis Method, and Sample Delivery Group

Sample Date	SDG	Location	Sample ID	Sample Type	Analytic Method	Lab
6/14/2018	9822	KAFB-106MW2-S	106MW2S-P2P-061418	REG	E300M	APTIM
					RSK-175	APTIM
	KAFB_013	KAFB-106064	106064-P2P-061418	REG	SM2320B	EPLN
					SM4500PE	EPLN
					SW6010C	EPLN
					SW8011	EPLN
					SW8260B	EPLN
					SW9056A	EPLN
			106064-P2P-061418-FD	FD	SM2320B	EPLN
					SM4500PE	EPLN
					SW6010C	EPLN
					SW8011	EPLN
					SW8260B	EPLN
					SW9056A	EPLN
		KAFB-106EX1	106EX1-P2P-061418	REG	SM2320B	EPLN
					SM4500PE	EPLN
					SW6010C	EPLN
					SW8011	EPLN
					SW8260B	EPLN
					SW9056A	EPLN
		KAFB-106EX2	106EX2-P2P-061418	REG	SM2320B	EPLN
					SM4500PE	EPLN
					SW6010C	EPLN
					SW8011	EPLN
					SW8260B	EPLN
					SW9056A	EPLN
		KAFB-106IN1	106IN1-P2P-061418	REG	SM2320B	EPLN
					SM4500PE	EPLN
					SW6010C	EPLN
					SW8011	EPLN
					SW8260B	EPLN
					SW9056A	EPLN
		KAFB-106MW1-S	106MW1S-P2P-061418	REG	SM2320B	EPLN
					SM4500PE	EPLN
					SW6010C	EPLN
					SW8011	EPLN
					SW8260B	EPLN
					SW9056A	EPLN
		KAFB-106MW2-S	106MW2S-P2P-061418	REG	SM2320B	EPLN
					SM4500PE	EPLN
					SW6010C	EPLN
					SW8011	EPLN
					SW8260B	EPLN
					SW9056A	EPLN
08/07/2018	160-30041-1	KAFB-106MW1-I	106MW1I-P3P-080718	REG	E300	TASTL
		KAFB-106MW1-S	106MW1S-P3P-080718	REG	E300	TASTL
		KAFB-106MW2-I	106MW2I-P3P-080718	REG	E300	TASTL
		KAFB-106MW2-S	106MW2S-P3P-080718	REG	E300	TASTL
	9827	KAFB-106MW1-I	106MW1I-P3P-080718	REG	E300M	APTIM
					RSK-175	APTIM
		KAFB-106MW1-S	106MW1S-P3P-080718	REG	E300M	APTIM
					RSK-175	APTIM
		KAFB-106MW2-I	106MW2I-P3P-080718	REG	E300M	APTIM
					RSK-175	APTIM
		KAFB-106MW2-S	106MW2S-P3P-080718	REG	E300M	APTIM
					RSK-175	APTIM

Appendix G-1 - Table 1. Summary of Samples Collected, Sample Date, Sample Location, Analysis Method, and Sample Delivery Group

Sample Date	SDG	Location	Sample ID	Sample Type	Analytic Method	Lab
08/08/2018	160-30041-1	KAFB-106063	106063-P3P-080818	REG	E300	TASTL
		KAFB-106064	106064-P3P-080818	REG	E300	TASTL
		KAFB-106EX1	106EX1-P3P-080818	REG	E300	TASTL
		KAFB-106EX2	106EX2-P3P-080818	REG	E300	TASTL
			106EX2-P3P-080818-FD	FD	E300	TASTL
	680-156637-1	KAFB-106063	106063-P3P-080818	REG	SM2320B	TASAC
					SW9056A	TASAC
					SW6010C	TASAV
					SW8011	TASAV
					SW8260B	TASAV
					SW9056A	TASAV
		KAFB-106064	106064-P3P-080818	REG	SM2320B	TASAC
					SW9056A	TASAC
					SW6010C	TASAV
					SW8011	TASAV
					SW8260B	TASAV
					SW9056A	TASAV
		KAFB-106EX1	106EX1-P3P-080818	REG	SM2320B	TASAC
					SW9056A	TASAC
					SW6010C	TASAV
					SW8011	TASAV
					SW8260B	TASAV
					SW9056A	TASAV
		KAFB-106EX2	106EX2-P3P-080818	REG	SM2320B	TASAC
					SW9056A	TASAC
					SW6010C	TASAV
					SW8011	TASAV
					SW8260B	TASAV
					SW9056A	TASAV
			106EX2-P3P-080818-FD	FD	SM2320B	TASAC
					SW9056A	TASAC
					SW6010C	TASAV
					SW8011	TASAV
					SW8260B	TASAV
					SW9056A	TASAV
	9828	KAFB-106063	106063-P3P-080818	REG	E300M	APTIM
					RSK-175	APTIM
		KAFB-106064	106064-P3P-080818	REG	E300M	APTIM
					RSK-175	APTIM
		KAFB-106EX1	106EX1-P3P-080818	REG	E300M	APTIM
					RSK-175	APTIM
		KAFB-106EX2	106EX2-P3P-080818	REG	E300M	APTIM
					RSK-175	APTIM
			106EX2-P3P-080818-FD	FD	E300M	APTIM
					RSK-175	APTIM
8/15/2018	160-30197-1	KAFB-106MW1-I	106MW1I-P3P-081518	REG	E300	TASTL
		KAFB-106MW1-S	106MW1S-P3P-081518	REG	E300	TASTL
		KAFB-106MW2-I	106MW2I-P3P-081518	REG	E300	TASTL
		KAFB-106MW2-S	106MW2S-P3P-081518	REG	E300	TASTL

Appendix G-1 - Table 1. Summary of Samples Collected, Sample Date, Sample Location, Analysis Method, and Sample Delivery Group

Sample Date	SDG	Location	Sample ID	Sample Type	Analytic Method	Lab
8/15/2018	680-156725-1	KAFB-106MW1-I	106MW1I-P3P-081518	REG	SM2320B	TASAC
					SW9056A	TASAC
					SW6010C	TASAV
					SW8011	TASAV
					SW8260B	TASAV
					SW9056A	TASAV
		KAFB-106MW1-S	106MW1S-P3P-081518	REG	SM2320B	TASAC
					SW9056A	TASAC
					SW6010C	TASAV
					SW8011	TASAV
					SW8260B	TASAV
					SW9056A	TASAV
		KAFB-106MW2-I	106MW2I-P3P-081518	REG	SM2320B	TASAC
					SW9056A	TASAC
					SW6010C	TASAV
					SW8011	TASAV
					SW8260B	TASAV
					SW9056A	TASAV
		KAFB-106MW2-S	106MW2S-P3P-081518	REG	SM2320B	TASAC
					SW9056A	TASAC
					SW6010C	TASAV
					SW8011	TASAV
					SW8260B	TASAV
					SW9056A	TASAV
	9829	KAFB-106MW1-I	106MW1I-P3P-081518	REG	E300M	APTIM
					RSK-175	APTIM
		KAFB-106MW1-S	106MW1S-P3P-081518	REG	E300M	APTIM
					RSK-175	APTIM
		KAFB-106MW2-I	106MW2I-P3P-081518	REG	E300M	APTIM
					RSK-175	APTIM
		KAFB-106MW2-S	106MW2S-P3P-081518	REG	E300M	APTIM
					RSK-175	APTIM
8/16/2018	160-30197-1	KAFB-106063	106063-P3P-081618	REG	E300	TASTL
		KAFB-106064	106064-P3P-081618	REG	E300	TASTL
		KAFB-106EX1	106EX1-P3P-081618	REG	E300	TASTL
			106EX1-P3P-081618-FD	FD	E300	TASTL
		KAFB-106EX2	106EX2-P3P-081618	REG	E300	TASTL
	680-156725-1	KAFB-106063	106063-P3P-081618	REG	SM2320B	TASAC
					SW9056A	TASAC
					SW6010C	TASAV
					SW8011	TASAV
					SW8260B	TASAV
					SW9056A	TASAV
		KAFB-106064	106064-P3P-081618	REG	SM2320B	TASAC
					SW9056A	TASAC
					SW6010C	TASAV
					SW8011	TASAV
					SW8260B	TASAV
					SW9056A	TASAV
		KAFB-106EX1	106EX1-P3P-081618	REG	SM2320B	TASAC
					SW9056A	TASAC
					SW6010C	TASAV
					SW8011	TASAV
					SW8260B	TASAV
					SW9056A	TASAV

Appendix G-1 - Table 1. Summary of Samples Collected, Sample Date, Sample Location, Analysis Method, and Sample Delivery Group

Sample Date	SDG	Location	Sample ID	Sample Type	Analytic Method	Lab
8/16/2018	680-156725-1	KAFB-106EX1	106EX1-P3P-081618-FD	FD	SM2320B	TASAC
					SW9056A	TASAC
					SW6010C	TASAV
					SW8011	TASAV
					SW8260B	TASAV
					SW9056A	TASAV
		KAFB-106EX2	106EX2-P3P-081618	REG	SM2320B	TASAC
					SW9056A	TASAC
					SW6010C	TASAV
					SW8011	TASAV
					SW8260B	TASAV
					SW9056A	TASAV
	9830	KAFB-106063	106063-P3P-081618	REG	E300M	APTIM
					RSK-175	APTIM
		KAFB-106064	106064-P3P-081618	REG	E300M	APTIM
					RSK-175	APTIM
		KAFB-106EX1	106EX1-P3P-081618	REG	E300M	APTIM
					RSK-175	APTIM
			106EX1-P3P-081618-FD	FD	E300M	APTIM
					RSK-175	APTIM
		KAFB-106EX2	106EX2-P3P-081618	REG	E300M	APTIM
					RSK-175	APTIM
8/21/2018	0_093PH	KAFB-106MW1-I	106MW1I-P3P-082118	REG	QUANTARRAY	MI
		KAFB-106MW1-S	106MW1S-P3P-082118	REG	QUANTARRAY	MI
		KAFB-106MW2-I	106MW2I-P3P-082118	REG	QUANTARRAY	MI
		KAFB-106MW2-S	106MW2S-P3P-082118	REG	QUANTARRAY	MI
	160-30327-1	KAFB-106MW1-I	106MW1I-P3P-082118	REG	E300	TASTL
			106MW1I-P3P-082118-FD	FD	E300	TASTL
		KAFB-106MW1-S	106MW1S-P3P-082118	REG	E300	TASTL
		KAFB-106MW2-I	106MW2I-P3P-082118	REG	E300	TASTL
		KAFB-106MW2-S	106MW2S-P3P-082118	REG	E300	TASTL
	680-156910-1	KAFB-106MW1-I	106MW1I-P3P-082118	REG	SM2320B	TASAC
					SW9056A	TASAC
					SW6010C	TASAV
					SW8011	TASAV
					SW8260B	TASAV
					SW9056A	TASAV
			106MW1I-P3P-082118-FD	FD	SM2320B	TASAC
					SW9056A	TASAC
					SW6010C	TASAV
					SW8011	TASAV
					SW8260B	TASAV
					SW9056A	TASAV
		KAFB-106MW1-S	106MW1S-P3P-082118	REG	SM2320B	TASAC
					SW9056A	TASAC
					SW6010C	TASAV
					SW8011	TASAV
					SW8260B	TASAV
					SW9056A	TASAV

Appendix G-1 - Table 1. Summary of Samples Collected, Sample Date, Sample Location, Analysis Method, and Sample Delivery Group

Sample Date	SDG	Location	Sample ID	Sample Type	Analytic Method	Lab
8/21/2018	680-156910-1	KAFB-106MW2-I	106MW2I-P3P-082118	REG	SM2320B	TASAC
					SW9056A	TASAC
					SW6010C	TASAV
					SW8011	TASAV
					SW8260B	TASAV
					SW9056A	TASAV
		KAFB-106MW2-S	106MW2S-P3P-082118	REG	SM2320B	TASAC
					SW9056A	TASAC
					SW6010C	TASAV
					SW8011	TASAV
					SW8260B	TASAV
					SW9056A	TASAV
	9832	KAFB-106MW1-I	106MW1I-P3P-082118	REG	E300M	APTIM
					RSK-175	APTIM
			106MW1I-P3P-082118-FD	FD	E300M	APTIM
					RSK-175	APTIM
		KAFB-106MW1-S	106MW1S-P3P-082118	REG	E300M	APTIM
					RSK-175	APTIM
		KAFB-106MW2-I	106MW2I-P3P-082118	REG	E300M	APTIM
					RSK-175	APTIM
		KAFB-106MW2-S	106MW2S-P3P-082118	REG	E300M	APTIM
					RSK-175	APTIM
8/22/2018	0_093PH	KAFB-106063	106063-P3P-082218	REG	QUANTARRAY	MI
		KAFB-106064	106064-P3P-082218	REG	QUANTARRAY	MI
		KAFB-106EX1	106EX1-P3P-082218	REG	QUANTARRAY	MI
		KAFB-106EX2	106EX2-P3P-082218	REG	QUANTARRAY	MI
	160-30327-1	KAFB-106063	106063-P3P-082218	REG	E300	TASTL
		KAFB-106064	106064-P3P-082218	REG	E300	TASTL
		KAFB-106EX1	106EX1-P3P-082218	REG	E300	TASTL
		KAFB-106EX2	106EX2-P3P-082218	REG	E300	TASTL
	680-156910-1	KAFB-106063	106063-P3P-082218	REG	SM2320B	TASAC
					SW9056A	TASAC
					SW6010C	TASAV
					SW8011	TASAV
					SW8260B	TASAV
					SW9056A	TASAV
		KAFB-106064	106064-P3P-082218	REG	SM2320B	TASAC
					SW9056A	TASAC
					SW6010C	TASAV
					SW8011	TASAV
					SW8260B	TASAV
					SW9056A	TASAV
		KAFB-106EX1	106EX1-P3P-082218	REG	SM2320B	TASAC
					SW9056A	TASAC
					SW6010C	TASAV
					SW8011	TASAV
					SW8260B	TASAV
					SW9056A	TASAV
		KAFB-106EX2	106EX2-P3P-082218	REG	SM2320B	TASAC
					SW9056A	TASAC
					SW6010C	TASAV
					SW8011	TASAV
					SW8260B	TASAV

Appendix G-1 - Table 1. Summary of Samples Collected, Sample Date, Sample Location, Analysis Method, and Sample Delivery Group

Sample Date	SDG	Location	Sample ID	Sample Type	Analytic Method	Lab
8/22/2018	680-156910-1	KAFB-106EX2	106EX2-P3P-082218	REG	SW9056A	TASAV
8/22/2018	9833	KAFB-106063	106063-P3P-082218	REG	E300M	APTIM
					RSK-175	APTIM
		KAFB-106064	106064-P3P-082218	REG	E300M	APTIM
					RSK-175	APTIM
		KAFB-106EX1	106EX1-P3P-082218	REG	E300M	APTIM
					RSK-175	APTIM
		KAFB-106EX2	106EX2-P3P-082218	REG	E300M	APTIM
					RSK-175	APTIM
08/28/2018	160-30445-1	KAFB-106MW1-I	106MW1I-P3P-082818	REG	E300	TASTL
		KAFB-106MW1-S	106MW1S-P3P-082818	REG	E300	TASTL
		KAFB-106MW2-I	106MW2I-P3P-082818	REG	E300	TASTL
		KAFB-106MW2-S	106MW2S-P3P-082818	REG	E300	TASTL
	680-157217-1	KAFB-106MW1-I	106MW1I-P3P-082818	REG	SM2320B	TASAC
					SW9056A	TASAC
					SW6010C	TASAV
					SW8011	TASAV
					SW8260B	TASAV
					SW9056A	TASAV
		KAFB-106MW1-S	106MW1S-P3P-082818	REG	SM2320B	TASAC
					SW9056A	TASAC
					SW6010C	TASAV
					SW8011	TASAV
					SW8260B	TASAV
					SW9056A	TASAV
		KAFB-106MW2-I	106MW2I-P3P-082818	REG	SM2320B	TASAC
					SW9056A	TASAC
					SW6010C	TASAV
					SW8011	TASAV
					SW8260B	TASAV
					SW9056A	TASAV
		KAFB-106MW2-S	106MW2S-P3P-082818	REG	SM2320B	TASAC
					SW9056A	TASAC
					SW6010C	TASAV
					SW8011	TASAV
					SW8260B	TASAV
					SW9056A	TASAV
	9834	KAFB-106MW1-I	106MW1I-P3P-082818	REG	E300M	APTIM
					RSK-175	APTIM
		KAFB-106MW1-S	106MW1S-P3P-082818	REG	E300M	APTIM
					RSK-175	APTIM
		KAFB-106MW2-I	106MW2I-P3P-082818	REG	E300M	APTIM
					RSK-175	APTIM
		KAFB-106MW2-S	106MW2S-P3P-082818	REG	E300M	APTIM
					RSK-175	APTIM
8/29/2018	160-30445-1	KAFB-106063	106063-P3P-082918	REG	E300	TASTL
			106063-P3P-082918-FD	FD	E300	TASTL
		KAFB-106064	106064-P3P-082918	REG	E300	TASTL
		KAFB-106EX1	106EX1-P3P-082918	REG	E300	TASTL
		KAFB-106EX2	106EX2-P3P-082918	REG	E300	TASTL

Appendix G-1 - Table 1. Summary of Samples Collected, Sample Date, Sample Location, Analysis Method, and Sample Delivery Group

Sample Date	SDG	Location	Sample ID	Sample Type	Analytic Method	Lab
	680-157273-1	KAFB-106063	106063-P3P-082918	REG	SM2320B	TASAC
					SW9056A	TASAC
					SW6010C	TASAV
					SW8011	TASAV
8/29/2018	680-157273-1	KAFB-106063	106063-P3P-082918	REG	SW8260B	TASAV
					SW9056A	TASAV
			106063-P3P-082918-FD	FD	SM2320B	TASAC
					SW9056A	TASAC
					SW6010C	TASAV
					SW8011	TASAV
					SW8260B	TASAV
					SW9056A	TASAV
		KAFB-106064	106064-P3P-082918	REG	SM2320B	TASAC
					SW9056A	TASAC
					SW6010C	TASAV
					SW8011	TASAV
					SW8260B	TASAV
					SW9056A	TASAV
		KAFB-106EX1	106EX1-P3P-082918	REG	SM2320B	TASAC
					SW9056A	TASAC
					SW6010C	TASAV
					SW8011	TASAV
					SW8260B	TASAV
					SW9056A	TASAV
		KAFB-106EX2	106EX2-P3P-082918	REG	SM2320B	TASAC
					SW9056A	TASAC
					SW6010C	TASAV
					SW8011	TASAV
					SW8260B	TASAV
					SW9056A	TASAV
	9835	KAFB-106063	106063-P3P-082918	REG	E300M	APTIM
					RSK-175	APTIM
			106063-P3P-082918-FD	FD	E300M	APTIM
					RSK-175	APTIM
		KAFB-106064	106064-P3P-082918	REG	E300M	APTIM
					RSK-175	APTIM
		KAFB-106EX1	106EX1-P3P-082918	REG	E300M	APTIM
					RSK-175	APTIM
		KAFB-106EX2	106EX2-P3P-082918	REG	E300M	APTIM
					RSK-175	APTIM
9/11/2018	160-30672-1	KAFB-106MW1-I	106MW1I-P3P-091118	REG	E300	TASTL
		KAFB-106MW1-S	106MW1S-P3P-091118	REG	E300	TASTL
		KAFB-106MW2-I	106MW2I-P3P-091118	REG	E300	TASTL
		KAFB-106MW2-S	106MW2S-P3P-091118	REG	E300	TASTL
	680-157805-1	KAFB-106MW1-I	106MW1I-P3P-091118	REG	SM2320B	TASAC
					SW9056A	TASAC
					SW6010C	TASAV
					SW8011	TASAV
					SW8260B	TASAV
					SW9056A	TASAV
		KAFB-106MW1-S	106MW1S-P3P-091118	REG	SM2320B	TASAC
					SW9056A	TASAC
					SW6010C	TASAV
					SW8011	TASAV
					SW8260B	TASAV
					SW9056A	TASAV

Appendix G-1 - Table 1. Summary of Samples Collected, Sample Date, Sample Location, Analysis Method, and Sample Delivery Group

Sample Date	SDG	Location	Sample ID	Sample Type	Analytic Method	Lab
9/11/2018	680-157805-1	KAFB-106MW2-I	106MW2I-P3P-091118	REG	SM2320B	TASAC
					SW9056A	TASAC
					SW6010C	TASAV
					SW8011	TASAV
					SW8260B	TASAV
					SW9056A	TASAV
		KAFB-106MW2-S	106MW2S-P3P-091118	REG	SM2320B	TASAC
					SW9056A	TASAC
					SW6010C	TASAV
					SW8011	TASAV
					SW8260B	TASAV
					SW9056A	TASAV
	9839	KAFB-106MW1-I	106MW1I-P3P-091118	REG	E300M	APTIM
					RSK-175	APTIM
		KAFB-106MW1-S	106MW1S-P3P-091118	REG	E300M	APTIM
					RSK-175	APTIM
		KAFB-106MW2-I	106MW2I-P3P-091118	REG	E300M	APTIM
					RSK-175	APTIM
		KAFB-106MW2-S	106MW2S-P3P-091118	REG	E300M	APTIM
					RSK-175	APTIM
09/12/2018	160-30672-1	KAFB-106063	106063-P3P-091218	REG	E300	TASTL
		KAFB-106064	106064-P3P-091218	REG	E300	TASTL
			106064-P3P-091218-FD	FD	E300	TASTL
		KAFB-106EX1	106EX1-P3P-091218	REG	E300	TASTL
		KAFB-106EX2	106EX2-P3P-091218	REG	E300	TASTL
	680-157881-1	KAFB-106063	106063-P3P-091218	REG	SM2320B	TASAC
					SW9056A	TASAC
					SW6010C	TASAV
					SW8011	TASAV
					SW8260B	TASAV
					SW9056A	TASAV
		KAFB-106064	106064-P3P-091218	REG	SM2320B	TASAC
					SW9056A	TASAC
					SW6010C	TASAV
					SW8011	TASAV
					SW8260B	TASAV
					SW9056A	TASAV
			106064-P3P-091218-FD	FD	SM2320B	TASAC
					SW9056A	TASAC
					SW6010C	TASAV
					SW8011	TASAV
					SW8260B	TASAV
					SW9056A	TASAV
		KAFB-106EX1	106EX1-P3P-091218	REG	SM2320B	TASAC
					SW9056A	TASAC
					SW6010C	TASAV
					SW8011	TASAV
					SW8260B	TASAV
					SW9056A	TASAV
		KAFB-106EX2	106EX2-P3P-091218	REG	SM2320B	TASAC
					SW9056A	TASAC
					SW6010C	TASAV
					SW8011	TASAV
					SW8260B	TASAV
					SW9056A	TASAV

Appendix G-1 - Table 1. Summary of Samples Collected, Sample Date, Sample Location, Analysis Method, and Sample Delivery Group

Sample Date	SDG	Location	Sample ID	Sample Type	Analytic Method	Lab
	9840	KAFB-106063	106063-P3P-091218	REG	E300M	APTIM
					RSK-175	APTIM
		KAFB-106064	106064-P3P-091218	REG	E300M	APTIM
					RSK-175	APTIM
		KAFB-106EX1	106EX1-P3P-091218	REG	E300M	APTIM
					RSK-175	APTIM
		KAFB-106EX2	106EX2-P3P-091218	REG	E300M	APTIM
					RSK-175	APTIM
10/02/2018	160-31078-1	KAFB-106MW2-I	106MW2I-P3P-100218	REG	E300	TASTL
		KAFB-106MW2-S	106MW2S-P3P-100218	REG	E300	TASTL
	680-158674-1	KAFB-106MW2-I	106MW2I-P3P-100218	REG	SM2320B	TASAC
					SW9056A	TASAC
					SW6010C	TASAV
					SW8011	TASAV
					SW8260B	TASAV
					SW9056A	TASAV
		KAFB-106MW2-S	106MW2S-P3P-100218	REG	SM2320B	TASAC
					SW9056A	TASAC
					SW6010C	TASAV
					SW8011	TASAV
					SW8260B	TASAV
					SW9056A	TASAV
	9841	KAFB-106MW2-I	106MW2I-P3P-100218	REG	E300M	APTIM
					RSK-175	APTIM
		KAFB-106MW2-S	106MW2S-P3P-100218	REG	E300M	APTIM
					RSK-175	APTIM
10/03/2018	160-31078-1	KAFB-106MW1-I	106MW1I-P3P-100318	REG	E300	TASTL
		KAFB-106MW1-S	106MW1S-P3P-100318	REG	E300	TASTL
			106MW1S-P3P-100318-FD	FD	E300	TASTL
	680-158738-1	KAFB-106MW1-I	106MW1I-P3P-100318	REG	SM2320B	TASAC
					SW9056A	TASAC
					SW6010C	TASAV
					SW8011	TASAV
					SW8260B	TASAV
					SW9056A	TASAV
		KAFB-106MW1-S	106MW1S-P3P-100318	REG	SM2320B	TASAC
					SW9056A	TASAC
					SW6010C	TASAV
					SW8011	TASAV
					SW8260B	TASAV
					SW9056A	TASAV
			106MW1S-P3P-100318-FD	FD	SM2320B	TASAC
					SW9056A	TASAC
					SW6010C	TASAV
					SW8011	TASAV
					SW8260B	TASAV
					SW9056A	TASAV
	9841	KAFB-106MW1-I	106MW1I-P3P-100318	REG	E300M	APTIM
					RSK-175	APTIM
		KAFB-106MW1-S	106MW1S-P3P-100318	REG	E300M	APTIM
					RSK-175	APTIM
			106MW1S-P3P-100318-FD	FD	E300M	APTIM
					RSK-175	APTIM
10/4/2018	160-31078-1	KAFB-106063	106063-P3P-100418	REG	E300	TASTL

Appendix G-1 - Table 1. Summary of Samples Collected, Sample Date, Sample Location, Analysis Method, and Sample Delivery Group

Sample Date	SDG	Location	Sample ID	Sample Type	Analytic Method	Lab
10/4/2018	160-31078-1	KAFB-106064	106064-P3P-100418	REG	E300	TASTL
		KAFB-106EX1	106EX1-P3P-100418	REG	E300	TASTL
		KAFB-106EX2	106EX2-P3P-100418	REG	E300	TASTL
		KAFB-106IN1	106IN1-P3P-100418	REG	E300	TASTL
10/4/2018	680-158847-1	KAFB-106063	106063-P3P-100418	REG	SM2320B	TASAC
					SW9056A	TASAC
					SW6010C	TASAV
					SW8011	TASAV
					SW8260B	TASAV
					SW9056A	TASAV
		KAFB-106064	106064-P3P-100418	REG	SM2320B	TASAC
					SW9056A	TASAC
					SW6010C	TASAV
					SW8011	TASAV
					SW8260B	TASAV
					SW9056A	TASAV
		KAFB-106EX1	106EX1-P3P-100418	REG	SM2320B	TASAC
					SW9056A	TASAC
					SW6010C	TASAV
					SW8011	TASAV
					SW8260B	TASAV
					SW9056A	TASAV
		KAFB-106EX2	106EX2-P3P-100418	REG	SM2320B	TASAC
					SW9056A	TASAC
					SW6010C	TASAV
					SW8011	TASAV
					SW8260B	TASAV
					SW9056A	TASAV
		KAFB-106IN1	106IN1-P3P-100418	REG	SM2320B	TASAC
					SW9056A	TASAC
					SW6010C	TASAV
					SW8011	TASAV
					SW8260B	TASAV
					SW9056A	TASAV
	9842	KAFB-106063	106063-P3P-100418	REG	E300M	APTIM
					RSK-175	APTIM
		KAFB-106064	106064-P3P-100418	REG	E300M	APTIM
					RSK-175	APTIM
		KAFB-106EX1	106EX1-P3P-100418	REG	E300M	APTIM
					RSK-175	APTIM
		KAFB-106EX2	106EX2-P3P-100418	REG	E300M	APTIM
					RSK-175	APTIM
		KAFB-106IN1	106IN1-P3P-100418	REG	E300M	APTIM
					RSK-175	APTIM
11/14/2018	160-31863-1	KAFB-106064	106064-P3P-111418	REG	E300	TASTL
		KAFB-106MW1-I	106MW1I-P3P-111418	REG	E300	TASTL
		KAFB-106MW1-S	106MW1S-P3P-111418	REG	E300	TASTL
	50_057	KAFB-106064	106064-P3P-111418	REG	QUANTARRAY	MI
		KAFB-106MW1-I	106MW1I-P3P-111418	REG	QUANTARRAY	MI
		KAFB-106MW1-S	106MW1S-P3P-111418	REG	QUANTARRAY	MI

Appendix G-1 - Table 1. Summary of Samples Collected, Sample Date, Sample Location, Analysis Method, and Sample Delivery Group

Sample Date	SDG	Location	Sample ID	Sample Type	Analytic Method	Lab
11/14/2018	680-160761-1	KAFB-106064	106064-P3P-111418	REG	SM2320B	TASAC
					SW9056A	TASAC
					SW6010C	TASAV
					SW8011	TASAV
					SW8260B	TASAV
					SW9056A	TASAV
		KAFB-106MW1-I	106MW1I-P3P-111418	REG	SM2320B	TASAC
					SW9056A	TASAC
					SW6010C	TASAV
					SW8011	TASAV
		KAFB-106MW1-I	106MW1I-P3P-111418	REG	SW8260B	TASAV
					SW9056A	TASAV
		KAFB-106MW1-S	106MW1S-P3P-111418	REG	SM2320B	TASAC
					SW9056A	TASAC
					SW6010C	TASAV
					SW8011	TASAV
					SW8260B	TASAV
					SW9056A	TASAV
	9843	KAFB-106064	106064-P3P-111418	REG	E300M	APTIM
					RSK-175	APTIM
		KAFB-106MW1-I	106MW1I-P3P-111418	REG	E300M	APTIM
					RSK-175	APTIM
		KAFB-106MW1-S	106MW1S-P3P-111418	REG	E300M	APTIM
					RSK-175	APTIM
11/15/2018	160-31892-1	KAFB-106063	106063-P3P-111518	REG	E300	TASTL
		KAFB-106MW2-I	106MW2I-P3P-111518	REG	E300	TASTL
			106MW2I-P3P-111518-FD	FD	E300	TASTL
		KAFB-106MW2-S	106MW2S-P3P-111518	REG	E300	TASTL
	50_057	KAFB-106063	106063-P3P-111518	REG	QUANTARRAY	MI
		KAFB-106MW2-I	106MW2I-P3P-111518	REG	QUANTARRAY	MI
		KAFB-106MW2-S	106MW2S-P3P-111518	REG	QUANTARRAY	MI
	680-160831-1	KAFB-106063	106063-P3P-111518	REG	SM2320B	TASAC
					SW9056A	TASAC
					SW6010C	TASAV
					SW8011	TASAV
					SW8260B	TASAV
					SW9056A	TASAV
		KAFB-106MW2-I	106MW2I-P3P-111518	REG	SM2320B	TASAC
					SW9056A	TASAC
					SW6010C	TASAV
					SW8011	TASAV
					SW8260B	TASAV
					SW9056A	TASAV
			106MW2I-P3P-111518-FD	FD	SM2320B	TASAC
					SW9056A	TASAC
					SW6010C	TASAV
					SW8011	TASAV
					SW8260B	TASAV
					SW9056A	TASAV
		KAFB-106MW2-S	106MW2S-P3P-111518	REG	SM2320B	TASAC
					SW9056A	TASAC
					SW6010C	TASAV
					SW8011	TASAV
					SW8260B	TASAV

Appendix G-1 - Table 1. Summary of Samples Collected, Sample Date, Sample Location, Analysis Method, and Sample Delivery Group

Sample Date	SDG	Location	Sample ID	Sample Type	Analytic Method	Lab
11/15/2018	680-160831-1	KAFB-106MW2-S	106MW2S-P3P-111518	REG	SW9056A	TASAV
	9844	KAFB-106063	106063-P3P-111518	REG	E300M	APTIM
					RSK-175	APTIM
		KAFB-106MW2-I	106MW2I-P3P-111518	REG	E300M	APTIM
					RSK-175	APTIM
			106MW2I-P3P-111518-FD	FD	E300M	APTIM
					RSK-175	APTIM
		KAFB-106MW2-S	106MW2S-P3P-111518	REG	E300M	APTIM
					RSK-175	APTIM
11/19/2018	160-31946-1	KAFB-106EX1	106EX1-P3P-111918	REG	E300	TASTL
		KAFB-106EX2	106EX2-P3P-111918	REG	E300	TASTL
		KAFB-106IN1	106IN1-P3P-111918	REG	E300	TASTL
	50_057	KAFB-106EX1	106EX1-P3P-111918	REG	QUANTARRAY	MI
		KAFB-106EX2	106EX2-P3P-111918	REG	QUANTARRAY	MI
		KAFB-106IN1	106IN1-P3P-111918	REG	QUANTARRAY	MI
	680-160953-1	KAFB-106EX1	106EX1-P3P-111918	REG	SM2320B	TASAC
					SW9056A	TASAC
					SW6010C	TASAV
					SW8011	TASAV
					SW8260B	TASAV
					SW9056A	TASAV
		KAFB-106EX2	106EX2-P3P-111918	REG	SM2320B	TASAC
					SW9056A	TASAC
					SW6010C	TASAV
					SW8011	TASAV
					SW8260B	TASAV
					SW9056A	TASAV
		KAFB-106IN1	106IN1-P3P-111918	REG	SM2320B	TASAC
					SW9056A	TASAC
					SW6010C	TASAV
					SW8011	TASAV
					SW8260B	TASAV
					SW9056A	TASAV
	9845	KAFB-106EX1	106EX1-P3P-111918	REG	E300M	APTIM
					RSK-175	APTIM
		KAFB-106EX2	106EX2-P3P-111918	REG	E300M	APTIM
					RSK-175	APTIM
		KAFB-106IN1	106IN1-P3P-111918	REG	E300M	APTIM
					RSK-175	APTIM
1/16/2019	160-32669-1	KAFB-106064	106064-P4P-011619	REG	E300	TASTL
		KAFB-106MW1-I	106MW1I-P4P-011619	REG	E300	TASTL
		KAFB-106MW1-S	106MW1S-P4P-011619	REG	E300	TASTL
	68_038A	KAFB-106064	106064-P4P-011619-FD	FD	QUANTARRAY	MI
		KAFB-106MW1-I	106MW1I-P4P-011619	REG	QUANTARRAY	MI
		KAFB-106MW1-S	106MW1S-P4P-011619	REG	QUANTARRAY	MI
	680-163342-1	KAFB-106064	106064-P4P-	REG	SM2320B	TASAC
					SW9056A	TASAC
					SW6010C	TASAV

Appendix G-1 - Table 1. Summary of Samples Collected, Sample Date, Sample Location, Analysis Method, and Sample Delivery Group

Sample Date	SDG	Location	Sample ID	Sample Type	Analytic Method	Lab
1/16/2019	680-163342-1	KAFB-106064	011619	REG	SW8011	TASAV
					SW8260B	TASAV
					SW9056A	TASAV
			106064-P4P-011619-FD	FD	SM2320B	TASAC
					SW9056A	TASAC
					SW6010C	TASAV
					SW8011	TASAV
					SW8260B	TASAV
					SW9056A	TASAV
1/16/2019	680-163342-1	KAFB-106MW1-I	106MW1I-P4P-011619	REG	SM2320B	TASAC
					SW9056A	TASAC
					SW6010C	TASAV
					SW8011	TASAV
					SW8260B	TASAV
					SW9056A	TASAV
		KAFB-106MW1-S	106MW1S-P4P-011619	REG	SM2320B	TASAC
					SW9056A	TASAC
					SW6010C	TASAV
					SW8011	TASAV
					SW8260B	TASAV
					SW9056A	TASAV
	9848	KAFB-106064	106064-P4P-011619	REG	E300M	APTIM
					RSK-175	APTIM
			106064-P4P-011619-FD	FD	E300M	APTIM
					RSK-175	APTIM
		KAFB-106MW1-I	106MW1I-P4P-011619	REG	E300M	APTIM
					RSK-175	APTIM
		KAFB-106MW1-S	106MW1S-P4P-011619	REG	E300M	APTIM
					RSK-175	APTIM
1/17/2019	160-32669-1	KAFB-106063	106063-P4P-011719	REG	E300	TASTL
		KAFB-106MW2-I	106MW2I-P4P-011719	REG	E300	TASTL
		KAFB-106MW2-S	106MW2S-P4P-011719	REG	E300	TASTL
	68_038A	KAFB-106063	106063-P4P-011719	REG	QUANTARRAY	MI
		KAFB-106MW2-I	106MW2I-P4P-011719	REG	QUANTARRAY	MI
		KAFB-106MW2-S	106MW2S-P4P-011719	REG	QUANTARRAY	MI
	680-163418-1	KAFB-106063	106063-P4P-011719	REG	SM2320B	TASAC
					SW9056A	TASAC
					SW6010C	TASAV
					SW8011	TASAV
					SW8260B	TASAV
					SW9056A	TASAV
		KAFB-106MW2-I	106MW2I-P4P-011719	REG	SM2320B	TASAC
					SW9056A	TASAC
					SW6010C	TASAV
					SW8011	TASAV
					SW8260B	TASAV
					SW9056A	TASAV
		KAFB-106MW2-S	106MW2S-P4P-0111719	REG	SM2320B	TASAC
					SW9056A	TASAC
					SW6010C	TASAV
					SW8011	TASAV
					SW8260B	TASAV
					SW9056A	TASAV

Appendix G-1 - Table 1. Summary of Samples Collected, Sample Date, Sample Location, Analysis Method, and Sample Delivery Group

Sample Date	SDG	Location	Sample ID	Sample Type	Analytic Method	Lab
1/17/2019	9849	KAFB-106063	106063-P4P-011719	REG	E300M	APTIM
					RSK-175	APTIM
		KAFB-106MW2-I	106MW2I-P4P-011719	REG	E300M	APTIM
					RSK-175	APTIM
		KAFB-106MW2-S	106MW2S-P4P-011719	REG	E300M	APTIM
					RSK-175	APTIM
1/21/2019	160-32669-1	KAFB-106EX1	106EX1-P4P-012119	REG	E300	TASTL
		KAFB-106EX2	106EX2-P4P-012119	REG	E300	TASTL
		KAFB-106IN1	106IN1-P4P-012119	REG	E300	TASTL
1/21/2019	68_038A	KAFB-106EX1	106EX1-P4P-012119	REG	QUANTARRAY	MI
		KAFB-106EX2	106EX2-P4P-012119	REG	QUANTARRAY	MI
		KAFB-106IN1	106IN1-P4P-012119	REG	QUANTARRAY	MI
	680-163514-1	KAFB-106EX1	106EX1-P4P-012119	REG	SM2320B	TASAC
					SW9056A	TASAC
					SW6010C	TASAV
					SW8011	TASAV
					SW8260B	TASAV
					SW9056A	TASAV
		KAFB-106EX2	106EX2-P4P-012119	REG	SM2320B	TASAC
					SW9056A	TASAC
					SW6010C	TASAV
					SW8011	TASAV
					SW8260B	TASAV
					SW9056A	TASAV
		KAFB-106IN1	106IN1-P4P-012119	REG	SM2320B	TASAC
					SW9056A	TASAC
					SW6010C	TASAV
					SW8011	TASAV
					SW8260B	TASAV
					SW9056A	TASAV
	9850	KAFB-106EX1	106EX1-P4P-012119	REG	E300M	APTIM
					RSK-175	APTIM
		KAFB-106EX2	106EX2-P4P-012119	REG	E300M	APTIM
					RSK-175	APTIM
		KAFB-106IN1	106IN1-P4P-012119	REG	E300M	APTIM
					RSK-175	APTIM

Notes:
REG : Regular
SDG: Sample Delivery Group
CHL: Crawford Hydrology Lab
EPLN: Empirical Laboratories
MI: Microbial Insights
TASTL: Test America in Earth City
TASAV: Test America in Savannah
TASAC: Test America in West Sacramento
USGS: U.S Geological Survey

Appendix G-1 – Table 2. Data Qualification Flags and Reason Codes

Data Qualifier Definitions for Organic Data Review

Qualifier	Definition
	No Qualifier indicates that the data are acceptable both qualitatively and quantitatively.
U	The analyte was analyzed for but was not detected above the reported limit of quantitation.
J	The analyte was analyzed for and was positively identified, but the reported numerical value may not be consistent with the amount actually present in the environmental sample. Results are estimated, although the data are considered usable and may be used as appropriate to meet project objectives. Results are qualitatively acceptable and quantitatively uncertain.
J-	The analyte was positively identified; the associated numerical value is its approximate concentration with a low bias in the sample.
J+	The analyte was positively identified; the associated numerical value is its approximate concentration with a high bias in the sample.
N	The analysis indicates the presence of an analyte for which there is presumptive evidence to make a “tentative identification.”
NJ	The analysis indicates the presence of an analyte that has been ”tentatively identified,” and the associated value represents its approximate concentration.
UJ	The analyte was not detected above the reported limit of quantitation. However, the reported limit of quantitation is approximate and may or may not represent the actual limit of quantitation necessary to accurately and precisely measure the analyte in the sample.
R	The analyte was analyzed for, but the presence or absence of the analyte has not been verified. Re-sampling and re-analysis may be necessary to confirm or deny the presence of the analyte. Results are rejected, and data are unusable for any purposes.

Data Qualifier Definitions For Inorganic Data Review

Qualifier	Definition
	No Qualifier indicates that the data are acceptable both qualitatively and quantitatively.
U	The analyte was analyzed for but was not detected above the level of the reported value. The reported value is the limit of quantitation for water and soil for all the analytes except cyanide and mercury. For cyanide and mercury, the reported value is the contract-required detection limit.
J	The analyte was analyzed for and was positively identified, but the reported numerical value may not be consistent with the amount actually present in the environmental sample. Results are estimated, although the data are considered usable and may be used as appropriate to meet project objectives. Results are qualitatively acceptable and quantitatively uncertain.
J-	The analyte was positively identified; the associated numerical value is its approximate concentration with a low bias in the sample.
J+	The analyte was positively identified; the associated numerical value is its approximate concentration with a high bias in the sample.
UJ	The analyte was analyzed for but was not detected above the reported value. The reported value may not accurately or precisely represent the sample limit of quantitation.
R	The analyte was analyzed for, but the presence or absence of the analyte has not been verified. Re-sampling and re-analysis may be necessary to confirm or deny the presence of the analyte. Results are rejected, and data are unusable for any purposes.

Appendix G-1 – Table 2. Data Qualification Flags and Reason Codes (concluded)

Reason Codes for Data Review and Validation

Reason Code	Description
A	Serial dilution outside criteria (Level IV).
B1	Method blank contaminants above reporting limit.
B2	Calibration blank contaminants above reporting limit.
B2, Bias Flag "-"	Calibration blank indicates negative interference; false negatives may be present.
C	Calibration outside control limits.
D	Sample results precision between primary and secondary columns outside control limit.
D1	Sample duplicate RPD outside control limit.
D2	Matrix duplicate RPD outside control limit.
D3	Laboratory control sample duplicate RPD outside control limit.
E	The sample results exceed the linear calibration range of the instrument.
F	Hydrocarbon pattern does not match hydrocarbon pattern in the standard.
G1	Initial calibration relative standard deviation outside control limit.
G2	Initial continuing calibration RRF outside control limit.
G3	Continuing calibration RRF outside control limit.
H	Holding time exceeded.
I	Internal standard recovery outside control limit.
K1	Equipment rinsate contamination.
K2	Ambient blank contamination.
K3	Trip blank contamination.
L	LCS outside control limits.
M	MS outside control limits.
O	Interference check sample outside acceptance criteria.
P	Analyte qualified based on the professional judgment of the reviewer.
S	Surrogate recovery outside control limit.
T	Temperature outside acceptance criteria.
Tr	Value reported detected between the detection limit and LOQ.
W	Pesticide breakdown outside criteria (Level IV).
X	Raised reporting limit due to matrix interference or high analyte concentration.
Y	Analyte was not confirmed by a second column.

Notes:
LCS laboratory control sample.
LOQ limit of quantitation.
MS matrix spike.
RPD relative percent difference.
RRF relative response factor.

Appendix G-1 - Table 3. Qualified Data Summary (Field QC Samples)

Sample	Sample Type	Sample Date	Analyte	SDG	Result	LOQ	Units	Qualifier
Reason Code C	**EPA Method SW8260B**							
TB-091917	TB	09/19/2017	2-BUTANONE	KAFB_003	5	10.0	µg/L	UJ
TB-091917	TB	09/19/2017	2-HEXANONE	KAFB_003	2.5	5.00	µg/L	UJ
TB-091917	TB	09/19/2017	4-METHYL-2-PENTANONE	KAFB_003	2.5	5.00	µg/L	UJ
Reason Code C, Tr	**EPA Method SW8260B**							
TB-111617	TB	11/16/2017	ACETONE	KAFB_005	4.17	10.0	µg/L	J-

Notes:

Please see Table 2 for definitions of qualifiers and reason codes.

µg/L - micrograms per liter.

EPA - Unites States Environmental Protection Agency.

LOQ - limit of quantitation.

QC - quality control.

SDG - sample delivery group.

TB - trip blank.

Appendix G-1 - Table 4. Detected Trip Blank Results and Associated Sample Results

SDG	Method	Analyte	Sample Date	Sample Type	Field Sample ID	Result	LOQ	Unit	ValQual	Reason
KAFB_002	SW8260B	ACETONE	08/16/2017	TB	TB-081617	2.53	10.0	µg/L		
		ACETONE	08/16/2017	REG	106064-BL-081617	25	25.0	µg/L	UJ	CK3
KAFB_003	SW8260B	CARBON DISULFIDE	09/18/2017	TB	TB-091817	0.279	1.00	µg/L		
		CARBON DISULFIDE	09/18/2017	REG	106MW1I-BL-091817	ND	2.00	µg/L	U	
		CARBON DISULFIDE	09/19/2017	TB	TB-091917	0.256	1.00	µg/L		
		CARBON DISULFIDE	09/19/2017	REG	106MW1S-BL-091917	ND	200	µg/L	UJ	S
		CARBON DISULFIDE	09/19/2017	FD	106MW2I-BL-FD-091917	ND	2.00	µg/L	U	
		CARBON DISULFIDE	09/26/2017	TB	TB-092617	0.289	1.00	µg/L		
		CARBON DISULFIDE	09/26/2017	REG	106EX1-BL-092617	27.2	100	µg/L	J	Tr
KAFB_004	SW8260B	ACETONE	10/25/2017	TB	TB-102517	3.27	10.0	µg/L	J	Tr
		ACETONE	10/25/2017	REG	106MW2I-P1R-102517	724	500	µg/L		
KAFB_005	SW8260B	ACETONE	11/16/2017	TB	TB-111617	4.17	10.0	µg/L	J-	CTr
		ACETONE	11/16/2017	REG	106MW2S-P1P-111617	272	1000	µg/L	J-	Tr
		ACETONE	11/16/2017	FD	106IN1-P1P-111617-FD	451	1000	µg/L	J-	CTr

Notes:

Please see Table 2 for definitions of qualifiers and reason codes

FD - field duplicate.

ID - identification.

KAFB - Kirtland Air Force Base.

LOQ - limit of quantitation.

ND - not detected.

REG - regular/parent sample.

TB - trip blank.

Appendix G-1 - Table 5 Field Duplicate Summary

		Location Code	KAFB-106063				
		Sample Number	106063-P3P-082918		106063-P3P-082918-FD		
		Sample Date	08/29/2018		08/29/2018		
		Sample Purpose	REG		FD		
		Sample Type	GW		GW		Relative Percent Difference
		Depth	--		--		
Test Group	**Parameter**	**Units**	**Result**	**VQ**	**Result**	**VQ**	
EDB	1,2-DIBROMOETHANE	µg/L	6.4		6.1		4.80
REDUCED GASES	ACETYLENE	µg/L	10	U	10	U	NC
	ETHANE	µg/L	4	U	4	U	NC
	ETHYLENE	µg/L	6.4		8.7		30.46
	METHANE	µg/L	15.5		21.7		33.33
	PROPANE	µg/L	6	U	6	U	NC
GENERAL CHEMISTRY	ACETIC ACID	MG/L	4.8		4.4		8.70
	ALKALINITY	MG/L	400		390		2.53
	BROMIDE	MG/L	0.98		0.87		11.89
	BUTYRIC ACID	MG/L	1	U	1	U	NC
	CHLORIDE	MG/L	52		52		0.00
	FORMIC ACID	MG/L	1	U	1	U	NC
	IODIDE	MG/L	5.3		5		5.83
	LACTIC ACID	MG/L	0.8	J	0.6	J	NC
	NITROGEN, NITRATE-NITRITE	MG/L	0.05	U	0.05	U	NC
	ORTHOPHOSPHATE	MG/L	0.15	U	0.15	U	NC
	PROPIONIC ACID	MG/L	1	U	1	U	NC
	PYRUVIC ACID	MG/L	1	U	1	U	NC
	SULFATE	MG/L	1	U	1	U	NC
	VALERIC ACID	MG/L	1	U	1	U	NC
METALS, DISS	IRON	µg/L	3800		3800		0.00
	MANGANESE	µg/L	4900		4900		0.00
VOLATILES	1,1,2-TRICHLOROETHANE	µg/L	0.5	U	50	U	NC
	1,2,4-TRIMETHYLBENZENE	µg/L	310		330		6.25
	1,2-DIBROMOETHANE	µg/L	8.4	J+	100	U	NC
	1,3,5-TRIMETHYLBENZENE	µg/L	130	J+	140		7.41
	2-BUTANONE	µg/L	6.2	J+	1000	U	NC
	2-CHLOROTOLUENE	µg/L	0.5	U	50	U	NC
	2-HEXANONE	µg/L	38	J+	500	U	NC
	4-METHYL-2-PENTANONE	µg/L	63	J+	500	U	NC
	ACETONE	µg/L	34	J+	1000	U	NC
	BENZENE	µg/L	3000		3100		3.28
	CARBON DISULFIDE	µg/L	2	U	200	U	NC
	CHLOROMETHANE	µg/L	1	U	100	U	NC
	ISOPROPYLBENZENE	µg/L	160	J+	160		0.00
	METHYL TERT-BUTYL ETHER	µg/L	0.48	J+	50	U	NC
	METHYLENE CHLORIDE	µg/L	5	U	270	J	NC
	NAPHTHALENE	µg/L	140	J+	500	U	NC
	N-BUTYLBENZENE	µg/L	20	J+	100	U	NC
	N-PROPYLBENZENE	µg/L	110	J+	120		8.70

Appendix G-1 - Table 5 Field Duplicate Summary

VOLATILES	P-ISOPROPYLTOLUENE	µg/L	160	J+	140		13.33
	SEC-BUTYLBENZENE	µg/L	18	J+	100	U	NC
	TERT-BUTYLBENZENE	µg/L	1.5	J+	100	U	NC
	TOLUENE	µg/L	6700		6800		1.48
	TRICHLOROETHENE	µg/L	1	U	100	U	NC
	TRICHLOROFLUOROMETHANE	µg/L	1	U	100	U	NC
	XYLENES	µg/L	3100		3200		3.17

Notes:
Please see Table 2 for definitions of qualifiers and reason codes.
FD - field duplicate.
GW - groundwater.
KAFB - Kirtland Air Force Base.
µg/L - micrograms per liter.
mg/L - milligram per liter.
NC - not calculated.
REG - regular/parent sample.
VQ - validation qualifier.

Appendix G-1 - Table 5 Field Duplicate Summary

Test Group							Relative Percent Difference
		Location Code	KAFB-106064				
		Sample Number	106064-P1R-100417		106064-P1R-100417-FD		
		Sample Date	10/04/2017		10/04/2017		
		Sample Purpose	REG		FD		
		Sample Type	GW		GW		
		Depth	--		--		
			Result	**VQ**	**Result**	**VQ**	
FLUORIMETRIC	FLUORESCEIN	PPB	0.01	U	0.01	U	NC
USGS	DELTA2H	PER MILLE	-93.39		-94.11		(0.77)

Notes:
Please see Table 2 for definitions of qualifiers and reason codes.
FD - field duplicate.
GW - groundwater.
KAFB - Kirtland Air Force Base.
NC - not calculated.
ppb - parts per billion.
REG - regular/parent sample.
USGS - Unites States Geological Survey.
VQ - validation qualifier.

Appendix G-1 - Table 5 Field Duplicate Summary

		Location Code	KAFB-106064				
		Sample Number	106064-P2P-050918		106064-P2P-050918-FD		
		Sample Date	05/09/2018		05/09/2018		
		Sample Purpose	REG		FD		
		Sample Type	GW		GW		Relative Percent Difference
		Depth	--		--		
Test Group	**Parameter**	**Units**	**Result**	**VQ**	**Result**	**VQ**	
EDB	1,2-DIBROMOETHANE	µg/L	6.2		10.6		52.38
GASES	ACETYLENE	µg/L	10	U	10	U	NC
	ETHANE	µg/L	4.5		4.59		1.98
	ETHYLENE	µg/L	11		11.7		6.17
	METHANE	µg/L	601		614		2.14
	PROPANE	µg/L	4.8	J	4.9	J	NC
GEN CHEMISTRY	ACETIC ACID	MG/L	119		122		2.49
	ALKALINITY	MG/L	421		402		4.62
	BROMIDE	MG/L	0.597		0.594		0.50
	BUTYRIC ACID	MG/L	1	U	1	U	NC
	CHLORIDE	MG/L	51.8		52		0.39
	FORMIC ACID	MG/L	0.4	J	0.3	J	NC
	IODIDE	MG/L	22		22		0.00
	LACTIC ACID	MG/L	1	U	1	U	NC
	NITRATE	MG/L	0.2	U	0.2	U	NC
	NITRITE	MG/L	0.2	U	0.2	U	NC
	O-PHOSPHATE (AS P)	MG/L	1.28		1.27		0.78
	PROPIONIC ACID	MG/L	24.3		24.1		0.83
	PYRUVIC ACID	MG/L	0.5	J	1	U	NC
	SULFATE	MG/L	2	U	2	U	NC
	VALERIC ACID	MG/L	1	U	1	U	NC
METALS, DISS	IRON	µg/L	5070		4810		5.26
	MANGANESE	µg/L	5620		5410		3.81
VOLATILES	1,1,2-TRICHLOROETHANE	µg/L	100	U	100	U	NC
	1,2,4-TRIMETHYLBENZENE	µg/L	404		409		1.23
	1,2-DIBROMOETHANE	µg/L	100	U	100	U	NC
	1,2-DICHLOROETHANE	µg/L	100	U	100	U	NC
	1,3,5-TRIMETHYLBENZENE	µg/L	124	J	142	J	NC
	2-BUTANONE	µg/L	1000	U	1000	U	NC
	2-CHLOROTOLUENE	µg/L	100	U	100	U	NC
	2-HEXANONE	µg/L	500	U	500	U	NC
	4-METHYL-2-PENTANONE	µg/L	500	U	500	U	NC
	ACETONE	µg/L	1000	U	1000	U	NC
	BENZENE	µg/L	3490		3620		3.66
	CARBON DISULFIDE	µg/L	100	U	100	U	NC
	CHLOROMETHANE	µg/L	100	U	100	U	NC
	DICHLORODIFLUOROMETHANE	µg/L	200	U	200	U	NC
	ETHYLBENZENE	µg/L	1660		1670		0.60
	ISOPROPYLBENZENE	µg/L	202		207		2.44
	METHYL TERT-BUTYL ETHER	µg/L	100	U	100	U	NC

Appendix G-1 - Table 5 Field Duplicate Summary

VOLATILES	METHYLENE CHLORIDE	µg/L	200	U	200	U	NC
	NAPHTHALENE	µg/L	137	J	137	J	NC
	N-BUTYLBENZENE	µg/L	100	U	100	U	NC
	N-PROPYLBENZENE	µg/L	124	J	117	J	NC
	P-ISOPROPYLTOLUENE	µg/L	56.1	J	56.2	J	NC
	SEC-BUTYLBENZENE	µg/L	100	U	100	U	NC
	TERT-BUTYLBENZENE	µg/L	100	U	100	U	NC
	TOLUENE	µg/L	13900		14000		0.72
	TRICHLOROETHENE	µg/L	100	U	100	U	NC
	TRICHLOROFLUOROMETHANE	µg/L	200	U	200	U	NC
	XYLENES	µg/L	5130		5220		1.74

Notes:
Please see Table 2 for definitions of qualifiers and reason codes.
FD - field duplicate.
GW - groundwater.
KAFB - Kirtland Air Force Base.
µg/L - micrograms per liter.
mg/L - milligram per liter.
NC - not calculated.
REG - regular/parent sample.
VQ - validation qualifier.

Appendix G-1 - Table 5 Field Duplicate Summary

		Location Code	KAFB-106064				
		Sample Number	106064-P2P-061418		106064-P2P-061418-FD		
		Sample Date	06/14/2018		06/14/2018		
		Sample Purpose	REG		FD		
		Sample Type	GW		GW		Relative Percent Difference
		Depth	--		--		
Test Group	**Parameter**	**Units**	**Result**	**VQ**	**Result**	**VQ**	
EDB	1,2-DIBROMOETHANE	µg/L	6.19		6.45		4.11
GASES	ACETYLENE	µg/L	10	UJ	10	UJ	0.00
	ETHANE	µg/L	5.3	J	5.3	J	0.00
	ETHYLENE	µg/L	12.6	J	13.2	J	4.65
	METHANE	µg/L	250	J	266	J	6.20
	PROPANE	µg/L	6	J	6.5	J	8.00
GEN CHEMISTRY	ACETIC ACID	MG/L	141	J	121	J	15.27
	ALKALINITY	MG/L	483	J-	473	J-	2.09
	BROMIDE	MG/L	0.416	J	0.417	J	NC
	BUTYRIC ACID	MG/L	10	UJ	10	UJ	0.00
	CHLORIDE	MG/L	49.3		49.4		0.20
	FORMIC ACID	MG/L	10	UJ	10	UJ	0.00
	IODIDE	MG/L	19		20		5.13
	LACTIC ACID	MG/L	10	UJ	10	UJ	0.00
	NITRATE	MG/L	0.5	U	0.5	U	NC
	NITRITE	MG/L	0.5	U	0.5	U	NC
	O-PHOSPHATE (AS P)	MG/L	1.45		6.73		129.10
	PROPIONIC ACID	MG/L	11.6	J	8.9	J	26.34
	PYRUVIC ACID	MG/L	10	UJ	10	UJ	0.00
	SULFATE	MG/L	5	U	5	U	NC
	VALERIC ACID	MG/L	10	UJ	10	UJ	0.00
METALS, DISS	IRON	µg/L	4230		4110		2.88
	MANGANESE	µg/L	5850		5470		6.71
VOLATILES	1,1,2-TRICHLOROETHANE	µg/L	100	U	100	U	NC
	1,2,4-TRIMETHYLBENZENE	µg/L	367		352		4.17
	1,2-DIBROMOETHANE	µg/L	100	U	100	U	NC
	1,2-DICHLOROETHANE	µg/L	100	U	100	U	NC
	1,3,5-TRIMETHYLBENZENE	µg/L	122	J	123	J	NC
	2-BUTANONE	µg/L	1000	U	1000	U	NC
	2-CHLOROTOLUENE	µg/L	100	U	100	U	NC
	2-HEXANONE	µg/L	500	U	500	U	NC
	4-METHYL-2-PENTANONE	µg/L	500	U	500	U	NC
	ACETONE	µg/L	657	J	657	J	NC
	BENZENE	µg/L	3820		3820		0.00
	CARBON DISULFIDE	µg/L	100	U	100	U	NC
	CHLOROMETHANE	µg/L	100	U	100	U	NC
	DICHLORODIFLUOROMETHANE	µg/L	200	U	200	U	NC
	ETHYLBENZENE	µg/L	1370		1390		1.45
	ISOPROPYLBENZENE	µg/L	149	J	158	J	NC
	METHYL TERT-BUTYL ETHER	µg/L	100	U	100	U	NC

Appendix G-1 - Table 5 Field Duplicate Summary

VOLATILES	METHYLENE CHLORIDE	µg/L	200	U	200	U	NC
	NAPHTHALENE	µg/L	110	J	113	J	NC
	N-BUTYLBENZENE	µg/L	100	U	100	U	NC
	N-PROPYLBENZENE	µg/L	104	J	112	J	NC
	P-ISOPROPYLTOLUENE	µg/L	100	U	56.6	J	NC
	SEC-BUTYLBENZENE	µg/L	100	U	100	U	NC
	TERT-BUTYLBENZENE	µg/L	100	U	100	U	NC
	TOLUENE	µg/L	13000		12900		0.77
	TRICHLOROETHENE	µg/L	100	U	100	U	NC
	TRICHLOROFLUOROMETHANE	µg/L	200	U	200	U	NC
	XYLENES	µg/L	4450		4410		0.90

Notes:
Please see Table 2 for definitions of qualifiers and reason codes.
FD - field duplicate.
GW - groundwater.
KAFB - Kirtland Air Force Base.
µg/L - micrograms per liter.
mg/L - milligram per liter.
NC - not calculated.
REG - regular/parent sample.
VQ - validation qualifier.

Appendix G-1 - Table 5 Field Duplicate Summary

		Location Code	KAFB-106064				
		Sample Number	106064-P3P-091218		106064-P3P-091218-FD		
		Sample Date	09/12/2018		09/12/2018		
		Sample Purpose	REG		FD		
		Sample Type	GW		GW		Relative Percent Difference
		Depth	--		--		
Test Group	**Parameter**	**Units**	**Result**	**VQ**	**Result**	**VQ**	
EDB	1,2-DIBROMOETHANE	µg/L	1.5		1.7		12.50
GASES	ACETYLENE	µg/L	10	U	10.0		NC
	ETHANE	µg/L	4.2		4.2		0.00
	ETHYLENE	µg/L	10.4		10.4		0.00
	METHANE	µg/L	7053.1		7,090.1		0.52
	PROPANE	µg/L	5.7	J	5.7		NC
GEN CHEMISTRY	ACETIC ACID	MG/L	50.6		50.1		0.99
	ALKALINITY	MG/L	450		460		2.20
	BROMIDE	MG/L	0.78	J+	0.77		1.29
	BUTYRIC ACID	MG/L	1	U	1.0		NC
	CHLORIDE	MG/L	51		51		0.00
	FORMIC ACID	MG/L	1	U	1.0		NC
	IODIDE	MG/L	4.5		5.3		16.33
	LACTIC ACID	MG/L	1	U	1.0		NC
	NITROGEN, NITRATE-NITRITE	MG/L	0.05	UJ	0.05	U	0.00
	ORTHOPHOSPHATE	MG/L	3.9		3.9		0.00
	PROPIONIC ACID	MG/L	74.9		76.1		1.59
	PYRUVIC ACID	MG/L	1	U	1.0		NC
	SULFATE	MG/L	1	U	1	U	NC
	VALERIC ACID	MG/L	1	U	1.0		NC
METALS, DISS	IRON	µg/L	3000		3000		0.00
	MANGANESE	µg/L	6500		6600		1.53
VOLATILES	1,1,2-TRICHLOROETHANE	µg/L	50	U	50	U	NC
	1,2,4-TRIMETHYLBENZENE	µg/L	350		360		2.82
	1,2-DIBROMOETHANE	µg/L	100	U	100	U	NC
	1,3,5-TRIMETHYLBENZENE	µg/L	120		120		0.00
	2-BUTANONE	µg/L	1000	U	1000	U	NC
	2-CHLOROTOLUENE	µg/L	50	U	50	U	NC
	2-HEXANONE	µg/L	500	U	500	U	NC
	4-METHYL-2-PENTANONE	µg/L	500	U	500	U	NC
	ACETONE	µg/L	1000	U	1000	U	NC
	BENZENE	µg/L	3300		3400		2.99
	CARBON DISULFIDE	µg/L	200	U	200	U	NC
	CHLOROMETHANE	µg/L	100	U	100	U	NC
	ISOPROPYLBENZENE	µg/L	100		100		0.00
	METHYL TERT-BUTYL ETHER	µg/L	50	U	50	U	NC
	METHYLENE CHLORIDE	µg/L	500	U	500	U	NC
	NAPHTHALENE	µg/L	500	U	500	U	NC
	N-BUTYLBENZENE	µg/L	100	U	100	U	NC
	N-PROPYLBENZENE	µg/L	94	J	92	J	NC

Appendix G-1 - Table 5 Field Duplicate Summary

VOLATILES	P-ISOPROPYLTOLUENE	µg/L	64	J	62	J	NC
	SEC-BUTYLBENZENE	µg/L	100	U	100	U	NC
	TERT-BUTYLBENZENE	µg/L	100	U	100	U	NC
	TOLUENE	µg/L	11000		11000		0.00
	TRICHLOROETHENE	µg/L	100	U	100	U	NC
	TRICHLOROFLUOROMETHANE	µg/L	100	U	100	U	NC
	XYLENES	µg/L	3500		3700		5.56

Notes:
Please see Table 2 for definitions of qualifiers and reason codes.
FD - field duplicate.
GW - groundwater.
KAFB - Kirtland Air Force Base.
µg/L - micrograms per liter.
mg/L - milligram per liter.
NC - not calculated.
REG - regular/parent sample.
VQ - validation qualifier.

Appendix G-1 - Table 5 Field Duplicate Summary

		Location Code	KAFB-106064				
		Sample Number	106064-P4P-011619		106064-P4P-011619-FD		
		Sample Date	01/16/2019		01/16/2019		
		Sample Purpose	REG		FD		
		Sample Type	GW		GW		Relative Percent Difference
		Depth	--		--		
Test Group	**Parameter**	**Units**	**Result**	**VQ**	**Result**	**VQ**	
EDB	1,2-DIBROMOETHANE	µg/L	0.028		0.026		7.41
GASES	ACETYLENE	µg/L	10	U	10	U	NC
	ETHANE	µg/L	4.5		4.5		0.00
	ETHYLENE	µg/L	6.7		6.6		1.50
	METHANE	µg/L	14220.9		15034.6		5.56
	PROPANE	µg/L	5.5	J	5.3	J	NC
GEN CHEMISTRY	ACETIC ACID	MG/L	0.5	J	0.3	J	NC
	ALKALINITY	MG/L	510		510		0.00
	BROMIDE	MG/L	1.1		0.77		35.29
	BUTYRIC ACID	MG/L	1	U	1	U	NC
	CHLORIDE	MG/L	47		48		2.11
	FORMIC ACID	MG/L	1	U	1	U	NC
	IODIDE	MG/L	4		-NA-		0.00
	LACTIC ACID	MG/L	0.8	J	0.8	J	NC
	NITROGEN, NITRATE-NITRITE	MG/L	0.05	UJ	0.05	UJ	0.00
	ORTHOPHOSPHATE	MG/L	0.14	J	0.12	J	NC
	PROPIONIC ACID	MG/L	1	U	1	U	NC
	PYRUVIC ACID	MG/L	1	U	1	U	NC
	SULFATE	MG/L	1	U	1	U	NC
	VALERIC ACID	MG/L	1	U	1	U	NC
METALS, DISS	IRON	µg/L	5100		5000		1.98
	MANGANESE	µg/L	7100		6400		10.37
VOLATILES	1,1,2-TRICHLOROETHANE	µg/L	50	U	50	U	NC
	1,2,4-TRIMETHYLBENZENE	µg/L	470		420		11.24
	1,2-DIBROMOETHANE	µg/L	100	U	100	U	NC
	1,3,5-TRIMETHYLBENZENE	µg/L	160		140		13.33
	2-BUTANONE	µg/L	1000	U	1000	U	NC
	2-CHLOROTOLUENE	µg/L	50	U	50	U	NC
	2-HEXANONE	µg/L	500	U	500	U	NC
	4-METHYL-2-PENTANONE	µg/L	500	U	500	U	NC
	ACETONE	µg/L	1000	U	1000	U	NC
	BENZENE	µg/L	3400		3200		6.06
	CARBON DISULFIDE	µg/L	200	U	200	U	NC
	CHLOROMETHANE	µg/L	100	U	100	U	NC
	ISOPROPYLBENZENE	µg/L	230		210		9.09
	METHYL TERT-BUTYL ETHER	µg/L	50	U	50	U	NC
	METHYLENE CHLORIDE	µg/L	500	U	500	U	NC
	NAPHTHALENE	µg/L	500	U	500	U	NC
	N-BUTYLBENZENE	µg/L	100	U	100	U	NC
	N-PROPYLBENZENE	µg/L	160		130		20.69
	P-ISOPROPYLTOLUENE	µg/L	100	U	100	U	NC
	SEC-BUTYLBENZENE	µg/L	100	U	100	U	NC

Appendix G-1 - Table 5 Field Duplicate Summary

VOLATILES	TERT-BUTYLBENZENE	µg/L	100	U	100	U	NC
	TOLUENE	µg/L	990		930		6.25
	TRICHLOROETHENE	µg/L	100	U	100	U	NC
	TRICHLOROFLUOROMETHANE	µg/L	100	U	100	U	NC
	XYLENES	µg/L	5000		4500		10.53

Notes:
Please see Table 2 for definitions of qualifiers and reason codes.
FD - field duplicate.
GW - groundwater.
KAFB - Kirtland Air Force Base.
µg/L - micrograms per liter.
mg/L - milligram per liter.
NC - not calculated.
REG - regular/parent sample.
VQ - validation qualifier.

Appendix G-1 - Table 5 Field Duplicate Summary

		Location Code	KAFB-106EX1				
		Sample Number	106EX1-P1R-102417		106EX1-P1R-102417-FD		
		Sample Date	10/24/2017		10/24/2017		
		Sample Purpose	REG		FD		
		Sample Type	GW		GW		Relative Percent Difference
		Depth	--		--		
Test Group	**Parameter**	**Units**	**Result**	**VQ**	**Result**	**VQ**	
EDB	1,2-DIBROMOETHANE	µg/L	53.6		50.4		6.15
FLUORIMETRIC	FLUORESCEIN	PPB	2.625		-NA-		0.00
GASES	ACETYLENE	µg/L	10	U	10	U	NC
	ETHANE	µg/L	4	U	4	U	NC
	ETHYLENE	µg/L	3.07	J	3.53	J	NC
	METHANE	µg/L	1.02	J	1.2	J	NC
	PROPANE	µg/L	6	U	6	U	NC
GEN CHEMISTRY	ACETIC ACID	MG/L	1	U	1	U	NC
	ALKALINITY	MG/L	267		268		0.37
	BROMIDE	MG/L	0.264		0.257		2.69
	BUTYRIC ACID	MG/L	1	U	1	U	NC
	CHLORIDE	MG/L	15.4		15.5		0.65
	FORMIC ACID	MG/L	1	U	1	U	NC
	IODIDE	MG/L	0.75	U	0.75	U	NC
	LACTIC ACID	MG/L	1	U	1	U	NC
	NITROGEN, NITRATE-NITRITE	MG/L	0.375	U	0.375	U	NC
	O-PHOSPHATE (AS P)	MG/L	0.0200	U	0.0200	U	NC
	PROPIONIC ACID	MG/L	1	U	1	U	NC
	PYRUVIC ACID	MG/L	1	U	1	U	NC
	SULFATE	MG/L	14.6		14.3		2.08
	VALERIC ACID	MG/L	1	U	1	U	NC
METALS, DISS	IRON	µg/L	248		250		0.80
	MANGANESE	µg/L	1570		1590		1.27
USGS	DELTA2H	PER MILLE	-93.32		-94.31		(1.06)
VOLATILES	1,1,2-TRICHLOROETHANE	µg/L	25.0	U	25.0	U	NC
	1,2,4-TRIMETHYLBENZENE	µg/L	255		220		14.74
	1,2-DIBROMOETHANE	µg/L	57.6		67.8		16.27
	1,2-DICHLOROETHANE	µg/L	25.0	U	25.0	U	NC
	1,3,5-TRIMETHYLBENZENE	µg/L	92.3		81.2		12.80
	2-BUTANONE	µg/L	250	U	148	J	NC
	2-CHLOROTOLUENE	µg/L	25.0	U	25.0	U	NC
	2-HEXANONE	µg/L	103	J	106	J	NC
	4-METHYL-2-PENTANONE	µg/L	125	U	68.6	J	NC
	ACETONE	µg/L	719		853		17.05
	BENZENE	µg/L	2910		2680		8.23
	CARBON DISULFIDE	µg/L	25.0	U	25.0	U	NC
	CHLOROMETHANE	µg/L	25.0	U	25.0	U	NC
	DICHLORODIFLUOROMETHANE	µg/L	50.0	U	50.0	U	NC
	ETHYLBENZENE	µg/L	688		620		10.40
VOLATILES	ISOPROPYLBENZENE	µg/L	61.4		53.0		14.69
	METHYL TERT-BUTYL ETHER	µg/L	25.0	U	25.0	U	NC

Appendix G-1 - Table 5 Field Duplicate Summary

VOLATILES	METHYLENE CHLORIDE	µg/L	50.0	U	50.0	U	NC
	NAPHTHALENE	µg/L	72.4		68.6		5.39
	N-BUTYLBENZENE	µg/L	14.6	J	12.9	J	NC
	N-PROPYLBENZENE	µg/L	63.9		58.1		9.51
	P-ISOPROPYLTOLUENE	µg/L	25.0	U	13.5	J	NC
	SEC-BUTYLBENZENE	µg/L	25.0	U	13.5	J	NC
	TERT-BUTYLBENZENE	µg/L	25.0	U	25.0	U	NC
	TOLUENE	µg/L	5610		5060		10.31
	TRICHLOROETHENE	µg/L	25.0	U	25.0	U	NC
	TRICHLOROFLUOROMETHANE	µg/L	50.0	U	50.0	U	NC
	XYLENES	µg/L	2470		2240		9.77

Notes:
Please see Table 2 for definitions of qualifiers and reason codes.
FD - field duplicate.
GW - groundwater.
KAFB - Kirtland Air Force Base.
µg/L - micrograms per liter.
mg/L - milligram per liter.
NC - not calculated.
REG - regular/parent sample.
VQ - validation qualifier.

Appendix G-1 - Table 5 Field Duplicate Summary

		Location Code	KAFB-106EX1				
		Sample Number	106EX1-P1R-101617		106EX1-P1R-101617-FD		
		Sample Date	10/16/2017		10/16/2017		
		Sample Purpose	REG		FD		
		Sample Type	GW		GW		Relative Percent Difference
		Depth	--		--		
Test Group	**Parameter**	**Units**	**Result**	**VQ**	**Result**	**VQ**	
FLUORIMETRIC	FLUORESCEIN	PPB	0.735		0.773		5.04
USGS	DELTA2H	PER MILLE	-92.41		-92.76		(0.38)

Notes:
Please see Table 2 for definitions of qualifiers and reason codes.
FD - field duplicate.
GW - groundwater.
KAFB - Kirtland Air Force Base.
NC - not calculated.
ppb - parts per billion.
REG - regular/parent sample.
USGS - Unites States Geological Survey.
VQ - validation qualifier.

Appendix G-1 - Table 5 Field Duplicate Summary

		Location Code	KAFB-106EX1				
		Sample Number	106EX1-P2R-011618		106EX1-P2R-011618-FD		
		Sample Date	01/16/2018		01/16/2018		
		Sample Purpose	REG		FD		
		Sample Type	GW		GW		Relative Percent Difference
		Depth	--		--		
Test Group	**Parameter**	**Units**	**Result**	**VQ**	**Result**	**VQ**	
EDB	1,2-DIBROMOETHANE	µg/L	62.2		80.0		25.04
GASES	ACETYLENE	µg/L	10.0	U	10.0	U	NC
	ETHANE	µg/L	2.66	J	2.71	J	NC
	ETHYLENE	µg/L	8.34		7.83		6.31
	METHANE	µg/L	2.92		2.78		4.91
	PROPANE	µg/L	2.68	J	2.61	J	NC
GEN CHEMISTRY	ACETIC ACID	MG/L	4.45		5.75		25.49
	ALKALINITY	MG/L	280		294		4.88
	BROMIDE	MG/L	0.403		0.383	J	5.09
	BUTYRIC ACID	MG/L	1.0	U	1.0	U	NC
	CHLORIDE	MG/L	29.6		29.1		1.70
	FORMIC ACID	MG/L	1.0	U	1.0	U	NC
	IODIDE	MG/L	0.58	J	0.59	J	NC
	LACTIC ACID	MG/L	0.75	J	0.93	J	NC
	NITROGEN, NITRATE-NITRITE	MG/L	0.375	U	0.375	U	NC
	O-PHOSPHATE (AS P)	MG/L	0.0200	U	0.0200	U	NC
	PROPIONIC ACID	MG/L	0.32	J	0.73	J	NC
	PYRUVIC ACID	MG/L	1.0	U	1.0	U	NC
	SULFATE	MG/L	7.21		7.15		0.84
	VALERIC ACID	MG/L	1.0	U	1.0	U	NC
METALS, DISS	IRON	µg/L	535		518		3.23
	MANGANESE	µg/L	2490		2460		1.21
VOLATILES	1,1,2-TRICHLOROETHANE	µg/L	50.0	U	50.0	U	NC
	1,2,4-TRIMETHYLBENZENE	µg/L	325		300		8.00
	1,2-DIBROMOETHANE	µg/L	51.0	J	45.8	J	NC
	1,2-DICHLOROETHANE	µg/L	50.0	U	50.0	U	NC
	1,3,5-TRIMETHYLBENZENE	µg/L	114		104		9.17
	2-BUTANONE	µg/L	500	U	500	U	NC
	2-CHLOROTOLUENE	µg/L	50.0	U	50.0	U	NC
	2-HEXANONE	µg/L	250	U	250	U	NC
	4-METHYL-2-PENTANONE	µg/L	250	U	250	U	NC
	ACETONE	µg/L	356	J	356	J	NC
	BENZENE	µg/L	3940		3740		5.21
	CARBON DISULFIDE	µg/L	50.0	U	50.0	U	NC
	CHLOROMETHANE	µg/L	50.0	U	50.0	U	NC
	DICHLORODIFLUOROMETHANE	µg/L	100	U	100	U	NC
	ETHYLBENZENE	µg/L	919		842		8.75
	ISOPROPYLBENZENE	µg/L	71.2	J	59.9	J	NC
	METHYL TERT-BUTYL ETHER	µg/L	50.0	U	50.0	U	NC
	METHYLENE CHLORIDE	µg/L	100	U	100	U	NC
	NAPHTHALENE	µg/L	98.7	J	86.5	J	NC
	N-BUTYLBENZENE	µg/L	50.0	U	50.0	U	NC

Appendix G-1 - Table 5 Field Duplicate Summary

VOLATILES	N-PROPYLBENZENE	µg/L	84.6	J	74.5	J	NC
	P-ISOPROPYLTOLUENE	µg/L	36.9	J	30.9	J	NC
	SEC-BUTYLBENZENE	µg/L	50.0	U	50.0	U	NC
	TERT-BUTYLBENZENE	µg/L	50.0	U	50.0	U	NC
	TOLUENE	µg/L	9220		8610		6.84
	TRICHLOROETHENE	µg/L	50.0	U	50.0	U	NC
	TRICHLOROFLUOROMETHANE	µg/L	100	U	100	U	NC
	XYLENES	µg/L	2860		2640		8.00

Notes:
Please see Table 2 for definitions of qualifiers and reason codes.
FD - field duplicate.
GW - groundwater.
KAFB - Kirtland Air Force Base.
µg/L - micrograms per liter.
mg/L - milligram per liter.
NC - not calculated.
REG - regular/parent sample.
VQ - validation qualifier.

Appendix G-1 - Table 5 Field Duplicate Summary

		Location Code	KAFB-106EX1				
		Sample Number	106EX1-P3P-081618		106EX1-P3P-081618-FD		
		Sample Date	08/16/2018		08/16/2018		
		Sample Purpose	REG		FD		
		Sample Type	GW		GW		Relative Percent Difference
		Depth	--		--		
Test Group	**Parameter**	**Units**	**Result**	**VQ**	**Result**	**VQ**	
EDB	1,2-DIBROMOETHANE	µg/L	19		22		14.63
GASES	ACETYLENE	µg/L	10	U	10	U	NC
	ETHANE	µg/L	3.8	J	3.6	J	NC
	ETHYLENE	µg/L	13		12.3		5.53
	METHANE	µg/L	9.3		9		3.28
	PROPANE	µg/L	5.5	J	4.8	J	NC
GEN CHEMISTRY	ACETIC ACID	MG/L	28.5		28.6		0.35
	ALKALINITY	MG/L	320		330		3.08
	BROMIDE	MG/L	0.71		0.69		2.86
	BUTYRIC ACID	MG/L	1	U	1	U	NC
	CHLORIDE	MG/L	33		33		0.00
	FORMIC ACID	MG/L	1	U	1	U	NC
	IODIDE	MG/L	3.9		3.7		5.26
	LACTIC ACID	MG/L	0.7	J	0.9	J	NC
	NITROGEN, NITRATE-NITRITE	MG/L	0.05	U	0.05	U	NC
	ORTHOPHOSPHATE	MG/L	0.15	U	0.15	U	NC
	PROPIONIC ACID	MG/L	1	U	1	U	NC
	PYRUVIC ACID	MG/L	1	U	1	U	NC
	SULFATE	MG/L	6.7		6.7		0.00
	VALERIC ACID	MG/L	1	U	1	U	NC
METALS, DISS	IRON	µg/L	1500		1500		0.00
	MANGANESE	µg/L	4200		4200		0.00
VOLATILES	1,1,2-TRICHLOROETHANE	µg/L	10	U	10	U	NC
	1,2,4-TRIMETHYLBENZENE	µg/L	320		300		6.45
	1,2-DIBROMOETHANE	µg/L	19	J	20		NC
	1,3,5-TRIMETHYLBENZENE	µg/L	110		100		9.52
	2-BUTANONE	µg/L	81	J	73	J	NC
	2-CHLOROTOLUENE	µg/L	10	U	10	U	NC
	2-HEXANONE	µg/L	88	J	92	J	NC
	4-METHYL-2-PENTANONE	µg/L	66	J	70	J	NC
	ACETONE	µg/L	280		280		0.00
	BENZENE	µg/L	3500		3300		5.88
	CARBON DISULFIDE	µg/L	40	U	40	U	NC
	CHLOROMETHANE	µg/L	20	U	20	U	NC
	ISOPROPYLBENZENE	µg/L	79		71		10.67
	METHYL TERT-BUTYL ETHER	µg/L	10	U	10	U	NC
	METHYLENE CHLORIDE	µg/L	100	U	100	U	NC
	NAPHTHALENE	µg/L	130		120		8.00
	N-BUTYLBENZENE	µg/L	14	J	12	J	NC
	N-PROPYLBENZENE	µg/L	76		68		11.11
	P-ISOPROPYLTOLUENE	µg/L	49		44		10.75
	SEC-BUTYLBENZENE	µg/L	15	J	14	J	NC

Appendix G-1 - Table 5 Field Duplicate Summary

VOLATILES	TERT-BUTYLBENZENE	µg/L	20	U	20	U	NC
	TOLUENE	µg/L	9500		9300		2.13
	TRICHLOROETHENE	µg/L	20	U	20	U	NC
	TRICHLOROFLUOROMETHANE	µg/L	20	U	20	U	NC
	XYLENES	µg/L	2900		2700		7.14

Notes:
Please see Table 2 for definitions of qualifiers and reason codes.
FD - field duplicate.
GW - groundwater.
KAFB - Kirtland Air Force Base.
µg/L - micrograms per liter.
mg/L - milligram per liter.
NC - not calculated.
REG - regular/parent sample.
VQ - validation qualifier.

Appendix G-1 - Table 5 Field Duplicate Summary

		Location Code	KAFB-106EX2				
		Sample Number	106EX2-P1R-110117		106EX2-P1R-110117-FD		
		Sample Date	11/01/2017		11/01/2017		
		Sample Purpose	REG		FD		
		Sample Type	GW		GW		Relative Percent Difference
		Depth	--		--		
Test Group	**Parameter**	**Units**	**Result**	**VQ**	**Result**	**VQ**	
FLUORIMETRIC	FLUORESCEIN	PPB	8.221		8.337		1.40
USGS	DELTA2H	PER MILLE	-84		-83		(1.20)

Notes:
Please see Table 2 for definitions of qualifiers and reason codes.
FD - field duplicate.
GW - groundwater.
KAFB - Kirtland Air Force Base.
NC - not calculated.
ppb - parts per billion.
REG - regular/parent sample.
USGS - Unites States Geological Survey.
VQ - validation qualifier.

Appendix G-1 - Table 5 Field Duplicate Summary

		Location Code	KAFB-106EX2				
		Sample Number	106EX2-P2R-011018		106EX2-P2R-011018-FD		
		Sample Date	01/10/2018		01/10/2018		
		Sample Purpose	REG		FD		
		Sample Type	GW		GW		**Relative Percent Difference**
		Depth	--		--		
Test Group	**Parameter**	**Units**	**Result**	**VQ**	**Result**	**VQ**	
EDB	1,2-DIBROMOETHANE	µg/L	61.4		70.2		13.37
GASES	ACETYLENE	µg/L	10.0	U	10.0	U	NC
	ETHANE	µg/L	1.56	J	1.65	J	NC
	ETHYLENE	µg/L	3.10	J	3.20	J	NC
	METHANE	µg/L	1.60	J	1.89	J	NC
	PROPANE	µg/L	6.0	U	6.0	U	NC
GEN CHEMISTRY	ACETIC ACID	MG/L	3.74		7.32		64.74
	ALKALINITY	MG/L	350		354		1.14
	BROMIDE	MG/L	0.848		0.844		0.47
	BUTYRIC ACID	MG/L	1.0	U	1.0	U	NC
	CHLORIDE	MG/L	87.5		87.2		0.34
	FORMIC ACID	MG/L	1.0	U	1.0	U	NC
	IODIDE	MG/L	0.82	J	0.83	J	NC
	LACTIC ACID	MG/L	0.79	J	1.63		NC
	NITROGEN, NITRATE-NITRITE	MG/L	0.375	U	0.375	U	NC
	O-PHOSPHATE (AS P)	MG/L	0.0172	J	0.0136	J	NC
	PROPIONIC ACID	MG/L	1.52		3.30		73.86
	PYRUVIC ACID	MG/L	1.0	U	1.0	U	NC
	SULFATE	MG/L	23.5	J+	24.0	J+	2.11
	VALERIC ACID	MG/L	1.0	U	1.0	U	NC
METALS, DISS	IRON	µg/L	352		356		1.13
	MANGANESE	µg/L	2870		2870		0.00
VOLATILES	1,1,2-TRICHLOROETHANE	µg/L	50.0	U	50.0	U	NC
	1,2,4-TRIMETHYLBENZENE	µg/L	256		273		6.43
	1,2-DIBROMOETHANE	µg/L	118		112		5.22
	1,2-DICHLOROETHANE	µg/L	50.0	U	50.0	U	NC
	1,3,5-TRIMETHYLBENZENE	µg/L	89.8	J	93.0	J	NC
	2-BUTANONE	µg/L	500	U	500	U	NC
	2-CHLOROTOLUENE	µg/L	50.0	U	50.0	U	NC
	2-HEXANONE	µg/L	231	J	197	J	NC
	4-METHYL-2-PENTANONE	µg/L	250	U	250	U	NC
	ACETONE	µg/L	954	J	829	J	NC
	BENZENE	µg/L	4260		4240		0.47
	CARBON DISULFIDE	µg/L	50.0	U	50.0	U	NC
	CHLOROMETHANE	µg/L	50.5		61.6		NC
	DICHLORODIFLUOROMETHANE	µg/L	100	U	100	U	NC
	ETHYLBENZENE	µg/L	882		871		1.25
	ISOPROPYLBENZENE	µg/L	66.3	J	66.9	J	NC
	METHYL TERT-BUTYL ETHER	µg/L	50.0	U	50.0	U	NC
	METHYLENE CHLORIDE	µg/L	58.0	J	50.4	J	NC
	NAPHTHALENE	µg/L	101		91.5		9.87
	N-BUTYLBENZENE	µg/L	50.0	U	50.0	U	NC

Appendix G-1 - Table 5 Field Duplicate Summary

VOLATILES	N-PROPYLBENZENE	µg/L	69.2	J	67.8	J	NC
	P-ISOPROPYLTOLUENE	µg/L	28.6	J	27.6	J	NC
	SEC-BUTYLBENZENE	µg/L	50.0	U	50.0	U	NC
	TERT-BUTYLBENZENE	µg/L	50.0	U	50.0	U	NC
	TOLUENE	µg/L	8070		8110		0.49
	TRICHLOROETHENE	µg/L	50.0	U	50.0	U	NC
	TRICHLOROFLUOROMETHANE	µg/L	100	U	100	U	NC
	XYLENES	µg/L	2870		2880		0.35

Notes:
Please see Table 2 for definitions of qualifiers and reason codes.
FD - field duplicate.
GW - groundwater.
KAFB - Kirtland Air Force Base.
µg/L - micrograms per liter.
mg/L - milligram per liter.
NC - not calculated.
REG - regular/parent sample.
VQ - validation qualifier.

Appendix G-1 - Table 5 Field Duplicate Summary

		Location Code	KAFB-106EX2				
		Sample Number	106EX2-P3P-080818		106EX2-P3P-080818-FD		
		Sample Date	08/08/2018		08/08/2018		
		Sample Purpose	REG		FD		
		Sample Type	GW		GW		**Relative Percent Difference**
		Depth	--		--		
Test Group	**Parameter**	**Units**	**Result**	**VQ**	**Result**	**VQ**	
EDB	1,2-DIBROMOETHANE	µg/L	82		74		10.26
GASES	ACETYLENE	µg/L	10	U	10	U	NC
	ETHANE	µg/L	4.9		4.8		2.06
	ETHYLENE	µg/L	9		8.5		5.71
	METHANE	µg/L	10.3		10		2.96
	PROPANE	µg/L	5.3	J	5.4	J	NC
GEN CHEMISTRY	ACETIC ACID	MG/L	13.9		14		0.72
	ALKALINITY	MG/L	380		370		2.67
	BROMIDE	MG/L	1.7		1.7		0.00
	BUTYRIC ACID	MG/L	1	U	1	U	NC
	CHLORIDE	MG/L	91		90		1.10
	FORMIC ACID	MG/L	1	U	1	U	NC
	IODIDE	MG/L	3.9		4.8		20.69
	LACTIC ACID	MG/L	1	U	1	U	NC
	NITROGEN, NITRATE-NITRITE	MG/L	0.05	R	0.05	R	0.00
	ORTHOPHOSPHATE	MG/L	0.15	R	0.15	R	NC
	PROPIONIC ACID	MG/L	1	U	1	U	NC
	PYRUVIC ACID	MG/L	1	U	1	U	NC
	SULFATE	MG/L	28		28		0.00
	VALERIC ACID	MG/L	1	U	1	U	NC
METALS, DISS	IRON	µg/L	1100		1200		8.70
	MANGANESE	µg/L	4400		4700		6.59
VOLATILES	1,1,2-TRICHLOROETHANE	µg/L	0.5	U	0.5	U	NC
	1,2,4-TRIMETHYLBENZENE	µg/L	230		230		0.00
	1,2-DIBROMOETHANE	µg/L	78	J+	85	J+	8.59
	1,3,5-TRIMETHYLBENZENE	µg/L	86	J+	88	J+	2.30
	2-BUTANONE	µg/L	130	J+	130	J+	0.00
	2-CHLOROTOLUENE	µg/L	0.5	U	0.5	U	NC
	2-HEXANONE	µg/L	160	J+	160	J+	0.00
	4-METHYL-2-PENTANONE	µg/L	98	J+	99	J+	1.02
	ACETONE	µg/L	480	J+	490	J+	2.06
	BENZENE	µg/L	3300		3500		5.88
	CARBON DISULFIDE	µg/L	2	U	2	U	NC
	CHLOROMETHANE	µg/L	1	U	1	U	NC
	ISOPROPYLBENZENE	µg/L	70	J+	71	J+	1.42
	METHYL TERT-BUTYL ETHER	µg/L	0.5	U	0.5	U	NC
	METHYLENE CHLORIDE	µg/L	5	U	5	U	NC
	NAPHTHALENE	µg/L	120	J+	130	J+	8.00
	N-BUTYLBENZENE	µg/L	12	J+	13	J+	8.00
	N-PROPYLBENZENE	µg/L	69	J+	71	J+	2.86

Appendix G-1 - Table 5 Field Duplicate Summary

VOLATILES	P-ISOPROPYLTOLUENE	µg/L	32	J+	33	J+	3.08
	SEC-BUTYLBENZENE	µg/L	13	J+	13	J+	0.00
	TERT-BUTYLBENZENE	µg/L	1.2	J+	1.1	J+	8.70
	TOLUENE	µg/L	7600	J-	7100	J-	6.80
	TRICHLOROETHENE	µg/L	1	U	1	U	NC
	TRICHLOROFLUOROMETHANE	µg/L	1	U	1	U	NC
	XYLENES	µg/L	2400		2400		0.00

Notes:
Please see Table 2 for definitions of qualifiers and reason codes.
FD - field duplicate.
GW - groundwater.
KAFB - Kirtland Air Force Base.
µg/L - micrograms per liter.
mg/L - milligram per liter.
NC - not calculated.
REG - regular/parent sample.
VQ - validation qualifier.

Appendix G-1 - Table 5 Field Duplicate Summary

		Location Code	KAFB-106IN1				
		Sample Number	106IN1-P1P-111617		106IN1-P1P-111617-FD		
		Sample Date	11/16/2017		11/16/2017		
		Sample Purpose	REG		FD		
		Sample Type	GW		GW		Relative Percent Difference
		Depth	--		--		
Test Group	**Parameter**	**Units**	**Result**	**VQ**	**Result**	**VQ**	
EDB	1,2-DIBROMOETHANE	µg/L	19.9		22.1		10.48
FLUORIMETRIC	FLUORESCEIN	PPB	3.338		-NA-		0.00
GASES	ACETYLENE	µg/L	10	U	10	U	NC
	ETHANE	µg/L	4	U	4	U	NC
	ETHYLENE	µg/L	4.04	J	4.03	J	NC
	METHANE	µg/L	18		17.3		3.97
	PROPANE	µg/L	6	U	6	U	NC
GEN CHEMISTRY	ACETIC ACID	MG/L	108		114		5.41
	ALKALINITY	MG/L	314		289		8.29
	BROMIDE	MG/L	0.676		0.683		1.03
	BUTYRIC ACID	MG/L	9.2		10.1		9.33
	CHLORIDE	MG/L	48.8		49.0		0.41
	FORMIC ACID	MG/L	1	U	1	U	NC
	IODIDE	MG/L	0.75	U	0.75	U	NC
	LACTIC ACID	MG/L	1	U	1	U	NC
	NITROGEN, NITRATE-NITRITE	MG/L	0.375	U	0.375	U	NC
	O-PHOSPHATE (AS P)	MG/L	0.0245	J	0.0171	J	NC
	PROPIONIC ACID	MG/L	21.9		22.7		3.59
	PYRUVIC ACID	MG/L	1	U	1	U	NC
	SULFATE	MG/L	2.00	U	2.00	U	NC
	VALERIC ACID	MG/L	4.34		4.03		7.41
METALS, DISS	IRON	µg/L	25500		24800		2.78
	MANGANESE	µg/L	3090		3060		0.98
USGS	DELTA2H	PER MILLE	-88.51		-87.39		(1.27)
VOLATILES	1,1,2-TRICHLOROETHANE	µg/L	50.0	U	50.0	U	NC
	1,2,4-TRIMETHYLBENZENE	µg/L	194		170		13.19
	1,2-DIBROMOETHANE	µg/L	26.5	J	26.4	J	NC
	1,2-DICHLOROETHANE	µg/L	50.0	U	50.0	U	NC
	1,3,5-TRIMETHYLBENZENE	µg/L	68.7	J	58.3	J	NC
	2-BUTANONE	µg/L	500	U	500	U	NC
	2-CHLOROTOLUENE	µg/L	50.0	U	50.0	U	NC
	2-HEXANONE	µg/L	250	U	250	U	NC
	4-METHYL-2-PENTANONE	µg/L	250	U	250	U	NC
	ACETONE	µg/L	466	J-	451	J-	NC
	BENZENE	µg/L	2950		2590		13.00
	CARBON DISULFIDE	µg/L	50.0	U	50.0	U	NC
	CHLOROMETHANE	µg/L	50.0	U	50.0	U	NC
	DICHLORODIFLUOROMETHANE	µg/L	100	U	100	U	NC
	ETHYLBENZENE	µg/L	576		483		17.56

Appendix G-1 - Table 5 Field Duplicate Summary

VOLATILES	ISOPROPYLBENZENE	µg/L	57.5	J	49.6	J	NC
	METHYL TERT-BUTYL ETHER	µg/L	50.0	U	50.0	U	NC
	METHYLENE CHLORIDE	µg/L	100	U	100	U	NC
	NAPHTHALENE	µg/L	73.6	J	77.0	J	NC
	N-BUTYLBENZENE	µg/L	50.0	U	50.0	U	NC
	N-PROPYLBENZENE	µg/L	45.6	J	39.3	J	NC
	P-ISOPROPYLTOLUENE	µg/L	50.0	U	50.0	U	NC
	SEC-BUTYLBENZENE	µg/L	50.0	U	50.0	U	NC
	TERT-BUTYLBENZENE	µg/L	50.0	U	50.0	U	NC
	TOLUENE	µg/L	6210		5140		18.85
	TRICHLOROETHENE	µg/L	50.0	U	50.0	U	NC
	TRICHLOROFLUOROMETHANE	µg/L	100	U	100	U	NC
	XYLENES	µg/L	1790		1520		16.31

Notes:
Please see Table 2 for definitions of qualifiers and reason codes.
FD - field duplicate.
GW - groundwater.
KAFB - Kirtland Air Force Base.
µg/L - micrograms per liter.
mg/L - milligram per liter.
NC - not calculated.
REG - regular/parent sample.
VQ - validation qualifier.

Appendix G-1 - Table 5 Field Duplicate Summary

		Location Code	KAFB-106MW1-I				
		Sample Number	106MW1I-P1R-100917		106MW1I-P1R-100917-FD		
		Sample Date	10/09/2017		10/09/2017		
		Sample Purpose	REG		FD		
		Sample Type	GW		GW		Relative Percent Difference
		Depth	--		--		
Test Group	**Parameter**	**Units**	**Result**	**VQ**	**Result**	**VQ**	
FLUORIMETRIC	FLUORESCEIN	PPB	0.01	U	0.01	U	NC
USGS	DELTA2H	PER MILLE	-96.02		-96.54		(0.54)

Notes:
Please see Table 2 for definitions of qualifiers and reason codes.
FD - field duplicate.
GW - groundwater.
KAFB - Kirtland Air Force Base.
NC - not calculated.
ppb - parts per billion.
REG - regular/parent sample.
USGS - Unites States Geological Survey.
VQ - validation qualifier.

Appendix G-1 - Table 5 Field Duplicate Summary

		Location Code	KAFB-106MW1-I				
		Sample Number	106MW1I-P2R-012418		106MW1I-P2R-012418-FD		
		Sample Date	01/24/2018		01/24/2018		
		Sample Purpose	REG		FD		
		Sample Type	GW		GW		Relative Percent Difference
		Depth	--		--		
Test Group	**Parameter**	**Units**	**Result**	**VQ**	**Result**	**VQ**	
EDB	1,2-DIBROMOETHANE	µg/L	44.2		32.1		31.72
GASES	ACETYLENE	µg/L	10.0	U	10.0	U	NC
	ETHANE	µg/L	0.75	J	0.78	J	NC
	ETHYLENE	µg/L	3.55	J	4.05	J	NC
	METHANE	µg/L	1.31	J	1.35	J	NC
	PROPANE	µg/L	6.0	U	6.0	U	NC
GEN CHEMISTRY	ACETIC ACID	MG/L	0.98	J	0.39	J	NC
	ALKALINITY	MG/L	366		360		1.65
	BROMIDE	MG/L	0.529	J-	0.548		3.53
	BUTYRIC ACID	MG/L	1.0	U	1.0	U	NC
	CHLORIDE	MG/L	48.5		48.9		0.82
	FORMIC ACID	MG/L	1.0	U	1.0	U	NC
	IODIDE	MG/L	0.56	J	0.58	J	NC
	LACTIC ACID	MG/L	0.97	J	0.39	J	NC
	NITROGEN, NITRATE-NITRITE	MG/L	0.375	U	0.375	U	NC
	O-PHOSPHATE (AS P)	MG/L	0.0200	U	0.0200	U	NC
	PROPIONIC ACID	MG/L	0.67	J	1.0	U	NC
	PYRUVIC ACID	MG/L	1.0	U	1.0	U	NC
	SULFATE	MG/L	1.73	J	1.75	J	NC
	VALERIC ACID	MG/L	1.0	U	1.0	U	NC
METALS, DISS	IRON	µg/L	6410	J-	6510	J-	1.55
	MANGANESE	µg/L	1090	J-	1050	J-	3.74
VOLATILES	1,1,2-TRICHLOROETHANE	µg/L	25.0	U	25.0	U	NC
	1,2,4-TRIMETHYLBENZENE	µg/L	195		200		2.53
	1,2-DIBROMOETHANE	µg/L	30.7	J	31.1	J	NC
	1,2-DICHLOROETHANE	µg/L	25.0	U	25.0	U	NC
	1,3,5-TRIMETHYLBENZENE	µg/L	98.1		100		1.92
	2-BUTANONE	µg/L	250	U	250	U	NC
	2-CHLOROTOLUENE	µg/L	25.0	U	25.0	U	NC
	2-HEXANONE	µg/L	125	U	125	U	NC
	4-METHYL-2-PENTANONE	µg/L	125	U	125	U	NC
	ACETONE	µg/L	193	J	196	J	NC
	BENZENE	µg/L	1570		1660		5.57
	CARBON DISULFIDE	µg/L	25.0	U	25.0	U	NC
	CHLOROMETHANE	µg/L	25.0	U	25.0	U	NC
	DICHLORODIFLUOROMETHANE	µg/L	50.0	U	50.0	U	NC
	ETHYLBENZENE	µg/L	614		634		3.21
	ISOPROPYLBENZENE	µg/L	51.0		49.5	J	2.99
	METHYL TERT-BUTYL ETHER	µg/L	25.0	U	25.0	U	NC
	METHYLENE CHLORIDE	µg/L	50.0	U	50.0	U	NC
	NAPHTHALENE	µg/L	55.6		50.6		9.42
	N-BUTYLBENZENE	µg/L	25.0	U	25.0	U	NC

Appendix G-1 - Table 5 Field Duplicate Summary

VOLATILES	N-PROPYLBENZENE	µg/L	44.3	J	46.0	J	NC
	P-ISOPROPYLTOLUENE	µg/L	25.0	U	25.0	U	NC
	SEC-BUTYLBENZENE	µg/L	25.0	U	25.0	U	NC
	TERT-BUTYLBENZENE	µg/L	25.0	U	25.0	U	NC
	TOLUENE	µg/L	5000		5090		1.78
	TRICHLOROETHENE	µg/L	25.0	U	25.0	U	NC
	TRICHLOROFLUOROMETHANE	µg/L	50.0	U	50.0	U	NC
	XYLENES	µg/L	1770		1780		0.56

Notes:
Please see Table 2 for definitions of qualifiers and reason codes.
FD - field duplicate.
GW - groundwater.
KAFB - Kirtland Air Force Base.
µg/L - micrograms per liter.
mg/L - milligram per liter.
NC - not calculated.
REG - regular/parent sample.
VQ - validation qualifier.

Appendix G-1 - Table 5 Field Duplicate Summary

		Location Code	KAFB-106MW1-I				
		Sample Number	106MW1I-P3P-082118		106MW1I-P3P-082118-FD		
		Sample Date	08/21/2018		08/21/2018		
		Sample Purpose	REG		FD		
		Sample Type	GW		GW		Relative Percent Difference
		Depth	--		--		
Test Group	**Parameter**	**Units**	**Result**	**VQ**	**Result**	**VQ**	
EDB	1,2-DIBROMOETHANE	µg/L	2.7		2.9		7.14
GASES	ACETYLENE	µg/L	10	U	10	U	NC
	ETHANE	µg/L	1.1	J	1.1	J	NC
	ETHYLENE	µg/L	3.7	J	3.8	J	NC
	METHANE	µg/L	13.9		14.8		6.27
	PROPANE	µg/L	1.3	J	1.2	J	NC
GEN CHEMISTRY	ACETIC ACID	MG/L	40.7		39.5		2.99
	ALKALINITY	MG/L	400		410		2.47
	BROMIDE	MG/L	0.81		0.8		1.24
	BUTYRIC ACID	MG/L	1	U	1	U	NC
	CHLORIDE	MG/L	49		49		0.00
	FORMIC ACID	MG/L	0.9	J	1	J	NC
	IODIDE	MG/L	13		13		0.00
	LACTIC ACID	MG/L	0.7	J	1.1		NC
	NITROGEN, NITRATE-NITRITE	MG/L	0.05		0.05		0.00
	ORTHOPHOSPHATE	MG/L	0.15		0.15		NC
	PROPIONIC ACID	MG/L	1	U	1	U	NC
	PYRUVIC ACID	MG/L	1	U	1	U	NC
	SULFATE	MG/L	1.9		2.1		10.00
	VALERIC ACID	MG/L	1	U	1	U	NC
METALS, DISS	IRON	µg/L	6900		7100		2.86
	MANGANESE	µg/L	4200		4300		2.35
VOLATILES	1,1,2-TRICHLOROETHANE	µg/L	2.5	U	2.5	U	NC
	1,2,4-TRIMETHYLBENZENE	µg/L	350		360		2.82
	1,2-DIBROMOETHANE	µg/L	3.9	J	3.4	J	NC
	1,3,5-TRIMETHYLBENZENE	µg/L	110		110		0.00
	2-BUTANONE	µg/L	44	J	49	J	NC
	2-CHLOROTOLUENE	µg/L	2.5	U	2.5	U	NC
	2-HEXANONE	µg/L	90		82		9.30
	4-METHYL-2-PENTANONE	µg/L	73		76		4.03
	ACETONE	µg/L	190		180		5.41
	BENZENE	µg/L	2800		2900		3.51
	CARBON DISULFIDE	µg/L	10	U	10	U	NC
	CHLOROMETHANE	µg/L	5	U	5	U	NC
	ISOPROPYLBENZENE	µg/L	120		120		0.00
	METHYL TERT-BUTYL ETHER	µg/L	2.5	U	2.5	U	NC
	METHYLENE CHLORIDE	µg/L	25	U	25	U	NC
	NAPHTHALENE	µg/L	140		130		7.41
	N-BUTYLBENZENE	µg/L	14		14		0.00
	N-PROPYLBENZENE	µg/L	110		110		0.00
	P-ISOPROPYLTOLUENE	µg/L	41		40		2.47
	SEC-BUTYLBENZENE	µg/L	14		13		7.41

Appendix G-1 - Table 5 Field Duplicate Summary

VOLATILES	TERT-BUTYLBENZENE	µg/L	5	U	5	U	NC
	TOLUENE	µg/L	4900		5100		4.00
	TRICHLOROETHENE	µg/L	5	U	5	U	NC
	TRICHLOROFLUOROMETHANE	µg/L	5	U	5	U	NC
	XYLENES	µg/L	3100		3300		6.25

Notes:
Please see Table 2 for definitions of qualifiers and reason codes.
FD - field duplicate.
GW - groundwater.
KAFB - Kirtland Air Force Base.
µg/L - micrograms per liter.
mg/L - milligram per liter.
NC - not calculated.
REG - regular/parent sample.
VQ - validation qualifier.

Appendix G-1 - Table 5 Field Duplicate Summary

		Location Code	KAFB-106MW1-S				
		Sample Number	106MW1S-P1R-100617		106MW1S-P1R-100617-FD		
		Sample Date	10/06/2017		10/06/2017		
		Sample Purpose	REG		FD		
		Sample Type	GW		GW		Relative Percent Difference
		Depth	--		--		
Test Group	**Parameter**	**Units**	**Result**	**VQ**	**Result**	**VQ**	
FLUORIMETRIC	FLUORESCEIN	PPB	0.01	U	0.01	U	NC
USGS	DELTA2H	PER MILLE	-96.06		-95.87		(0.20)

Notes:
Please see Table 2 for definitions of qualifiers and reason codes.
FD - field duplicate.
GW - groundwater.
KAFB - Kirtland Air Force Base.
NC - not calculated.
ppb - parts per billion.
REG - regular/parent sample.
USGS - Unites States Geological Survey.
VQ - validation qualifier.

Appendix G-1 - Table 5 Field Duplicate Summary

		Location Code	KAFB-106MW1-S				
		Sample Number	106MW1S-P3P-100318		106MW1S-P3P-100318-FD		
		Sample Date	10/03/2018		10/03/2018		
		Sample Purpose	REG		FD		
		Sample Type	GW		GW		Relative Percent Difference
		Depth	--		--		
Test Group	**Parameter**	**Units**	**Result**	**VQ**	**Result**	**VQ**	
EDB	1,2-DIBROMOETHANE	µg/L	3.2		3.9		19.72
GASES	ACETYLENE	µg/L	10	U	10	U	NC
	ETHANE	µg/L	4.9		4.7		4.17
	ETHYLENE	µg/L	13.4		13.3		0.75
	METHANE	µg/L	1436.2		1384		3.70
	PROPANE	µg/L	7.2		7		2.82
GEN CHEMISTRY	ACETIC ACID	MG/L	105.1		106.6		1.42
	ALKALINITY	MG/L	460		470		2.15
	BROMIDE	MG/L	2		2.1		4.88
	BUTYRIC ACID	MG/L	1	U	1	U	NC
	CHLORIDE	MG/L	49		50		2.02
	FORMIC ACID	MG/L	1.6	J	1.5	J	NC
	IODIDE	MG/L	5		5.1		1.98
	LACTIC ACID	MG/L	1	U	1	U	NC
	NITROGEN, NITRATE-NITRITE	MG/L	0.05	U	0.05	U	NC
	ORTHOPHOSPHATE	MG/L	0.15	U	0.15	U	NC
	PROPIONIC ACID	MG/L	57.7		60		3.91
	PYRUVIC ACID	MG/L	1	U	1	U	NC
	SULFATE	MG/L	1	U	1	U	NC
	VALERIC ACID	MG/L	1	U	1	U	NC
METALS, DISS	IRON	µg/L	7300		7500		2.70
	MANGANESE	µg/L	7200		7500		4.08
VOLATILES	1,1,2-TRICHLOROETHANE	µg/L	50	U	50	U	NC
	1,2,4-TRIMETHYLBENZENE	µg/L	430		420		2.35
	1,2-DIBROMOETHANE	µg/L	100	U	100	U	NC
	1,3,5-TRIMETHYLBENZENE	µg/L	140		140		0.00
	2-BUTANONE	µg/L	1000	U	1000	U	NC
	2-CHLOROTOLUENE	µg/L	50	U	50	U	NC
	2-HEXANONE	µg/L	500	U	500	U	NC
	4-METHYL-2-PENTANONE	µg/L	500	U	500	U	NC
	ACETONE	µg/L	1000	U	1000	U	NC
	BENZENE	µg/L	4100		4000		2.47
	CARBON DISULFIDE	µg/L	200	U	200	U	NC
	CHLOROMETHANE	µg/L	100	U	100	U	NC
	ISOPROPYLBENZENE	µg/L	110		110		0.00
	METHYL TERT-BUTYL ETHER	µg/L	50	U	50	U	NC
	METHYLENE CHLORIDE	µg/L	500	U	500	U	NC
	NAPHTHALENE	µg/L	500	U	500	U	NC
	N-BUTYLBENZENE	µg/L	100	U	100	U	NC
	N-PROPYLBENZENE	µg/L	130		120		8.00
	P-ISOPROPYLTOLUENE	µg/L	100	U	100	U	NC
	SEC-BUTYLBENZENE	µg/L	100	U	100	U	NC

Appendix G-1 - Table 5 Field Duplicate Summary

VOLATILES	TERT-BUTYLBENZENE	µg/L	100	U	100	U	NC
	TOLUENE	µg/L	11000		11000		0.00
	TRICHLOROETHENE	µg/L	100	U	100	U	NC
	TRICHLOROFLUOROMETHANE	µg/L	100	U	100	U	NC
	XYLENES	µg/L	4400		4200		4.65

Notes:
Please see Table 2 for definitions of qualifiers and reason codes.
FD - field duplicate.
GW - groundwater.
KAFB - Kirtland Air Force Base.
µg/L - micrograms per liter.
mg/L - milligram per liter.
NC - not calculated.
REG - regular/parent sample.
VQ - validation qualifier.

Appendix G-1 - Table 5 Field Duplicate Summary

		Location Code	KAFB-106MW2-I				
		Sample Number	106MW2I-BL-072417		106MW2I-BL-FD-072417		
		Sample Date	07/24/2017		07/24/2017		
		Sample Purpose	REG		FD		
		Sample Type	GW		GW		**Relative Percent Difference**
		Depth	--		--		
Test Group	**Parameter**	**Units**	**Result**	**VQ**	**Result**	**VQ**	
EDB	1,2-DIBROMOETHANE	µg/L	0.019	UJ	0.0189	UJ	NC
FLUORIMETRIC	FLUORESCEIN	PPB	0.01	U	0.01	U	NC
GASES	ACETYLENE	µg/L	10	U	10	U	NC
	ETHANE	µg/L	4	U	4	U	NC
	ETHYLENE	µg/L	5	U	5	U	NC
	METHANE	µg/L	2	U	2	U	NC
	PROPANE	µg/L	6	U	6	U	NC
GEN CHEMISTRY	ACETIC ACID	MG/L	1	U	1	U	NC
	ALKALINITY	MG/L	190		186		2.13
	BROMIDE	MG/L	0.196		0.193		NC
	BUTYRIC ACID	MG/L	1	U	1	U	NC
	CHLORIDE	MG/L	20.4		20.4		0.00
	FORMIC ACID	MG/L	1	U	1	U	NC
	IODIDE	MG/L	0.2	U	0.2	U	NC
	LACTIC ACID	MG/L	1	U	1	U	NC
	NITROGEN, NITRATE-NITRITE	MG/L	0.375	U	0.375	U	NC
	O-PHOSPHATE (AS P)	MG/L	0.02	U	0.0125		NC
	PROPIONIC ACID	MG/L	1	U	1	U	NC
	PYRUVIC ACID	MG/L	1	U	1	U	NC
	SULFATE	MG/L	23		23.1		0.43
	VALERIC ACID	MG/L	1	U	1	U	NC
METALS, DISS	IRON	µg/L	53		51.4		NC
	MANGANESE	µg/L	154		142		8.11
USGS	DELTA2H	PER MILLE	-97.17		-97.04		(0.13)
VOLATILES	1,1,2-TRICHLOROETHANE	µg/L	1	U	1	U	NC
	1,2,4-TRIMETHYLBENZENE	µg/L	1	U	1	U	NC
	1,2-DIBROMOETHANE	µg/L	1	U	1	U	NC
	1,2-DICHLOROETHANE	µg/L	1	U	1	U	NC
	1,3,5-TRIMETHYLBENZENE	µg/L	1	U	1	U	NC
	2-BUTANONE	µg/L	10	U	10	U	NC
	2-CHLOROTOLUENE	µg/L	1	U	1	U	NC
	2-HEXANONE	µg/L	5	U	5	U	NC
	4-METHYL-2-PENTANONE	µg/L	5	U	5	U	NC
	ACETONE	µg/L	19.8	J	15.9	J	NC
	BENZENE	µg/L	1	U	1	U	NC
	CARBON DISULFIDE	µg/L	1	U	1	U	NC
	CHLOROMETHANE	µg/L	1	U	1	U	NC
	DICHLORODIFLUOROMETHANE	µg/L	2	U	2	U	NC
	ETHYLBENZENE	µg/L	1	U	1	U	NC
	ISOPROPYLBENZENE	µg/L	1	U	1	U	NC
	METHYL TERT-BUTYL ETHER	µg/L	1	U	1	U	NC

Appendix G-1 - Table 5 Field Duplicate Summary

VOLATILES	METHYLENE CHLORIDE	µg/L	2	U	2	U	NC
	NAPHTHALENE	µg/L	1	U	1	U	NC
	N-BUTYLBENZENE	µg/L	1	U	1	U	NC
	N-PROPYLBENZENE	µg/L	1	U	1	U	NC
	P-ISOPROPYLTOLUENE	µg/L	1	U	1	U	NC
	SEC-BUTYLBENZENE	µg/L	1	U	1	U	NC
	TERT-BUTYLBENZENE	µg/L	1	U	1	U	NC
	TOLUENE	µg/L	1	U	0.69	J	NC
	TRICHLOROETHENE	µg/L	1	U	1	U	NC
	TRICHLOROFLUOROMETHANE	µg/L	2	U	2	U	NC
	XYLENES	µg/L	3	U	3	U	NC

Notes:
Please see Table 2 for definitions of qualifiers and reason codes.
FD - field duplicate.
GW - groundwater.
KAFB - Kirtland Air Force Base.
µg/L - micrograms per liter.
mg/L - milligram per liter.
NC - not calculated.
REG - regular/parent sample.
VQ - validation qualifier.

Appendix G-1 - Table 5 Field Duplicate Summary

		Location Code	KAFB-106MW2-I				
		Sample Number	106MW2I-BL-091917		106MW2I-BL-FD-091917		
		Sample Date	09/19/2017		09/19/2017		
		Sample Purpose	REG		FD		
		Sample Type	GW		GW		Relative Percent Difference
		Depth	--		--		
Test Group	**Parameter**	**Units**	**Result**	**VQ**	**Result**	**VQ**	
EDB	1,2-DIBROMOETHANE	µg/L	0.072		0.122		51.55
FLUORIMETRIC	FLUORESCEIN	PPB	0.01	U	0.01	U	NC
GASES	ACETYLENE	µg/L	10	U	10	U	NC
	ETHANE	µg/L	4	U	4	U	NC
	ETHYLENE	µg/L	5	U	5	U	NC
	METHANE	µg/L	7.2		6.86		4.84
	PROPANE	µg/L	6	U	6	U	NC
GEN CHEMISTRY	ACETIC ACID	MG/L	0.59	J	0.31	J	NC
	ALKALINITY	MG/L	194		207		6.48
	BROMIDE	MG/L	0.249		0.287		NC
	BUTYRIC ACID	MG/L	1	U	1	U	NC
	CHLORIDE	MG/L	31.6		32.1		1.57
	FORMIC ACID	MG/L	1	U	1	U	NC
	IODIDE	MG/L	0.75	U	0.75	U	NC
	LACTIC ACID	MG/L	1.08		0.97	J	10.73
	NITROGEN, NITRATE-NITRITE	MG/L	0.375	U	0.375	U	NC
	O-PHOSPHATE (AS P)	MG/L	0.0342	U	0.0525	U	NC
	PROPIONIC ACID	MG/L	1	U	1	U	NC
	PYRUVIC ACID	MG/L	1	U	1	U	NC
	SULFATE	MG/L	19.2		19.8		3.08
	VALERIC ACID	MG/L	1	U	1	U	NC
METALS, DISS	IRON	µg/L	955		996		4.20
	MANGANESE	µg/L	392		405		3.26
USGS	DELTA2H	PER MILLE	-96.44		-96.4		(0.04)
VOLATILES	1,1,2-TRICHLOROETHANE	µg/L	2.5	U	1	U	NC
	1,2,4-TRIMETHYLBENZENE	µg/L	2.5	U	1	U	NC
	1,2-DIBROMOETHANE	µg/L	2.5	U	1	U	NC
	1,2-DICHLOROETHANE	µg/L	2.5	U	0.78	J	NC
	1,3,5-TRIMETHYLBENZENE	µg/L	2.5	U	1	U	NC
	2-BUTANONE	µg/L	25	U	10	J-	NC
	2-CHLOROTOLUENE	µg/L	2.5	U	1	U	NC
	2-HEXANONE	µg/L	12.5	U	5	UJ	NC
	4-METHYL-2-PENTANONE	µg/L	12.5	U	5	UJ	NC
	ACETONE	µg/L	24.6	J	11.3	J	NC
	BENZENE	µg/L	2.5	U	1	U	NC
	CARBON DISULFIDE	µg/L	2.5	U	1	U	NC
	CHLOROMETHANE	µg/L	2.5	U	1	U	NC
	DICHLORODIFLUOROMETHANE	µg/L	5	U	2	U	NC
	ETHYLBENZENE	µg/L	2.5	U	0.619	J	NC

Appendix G-1 - Table 5 Field Duplicate Summary

VOLATILES	ISOPROPYLBENZENE	µg/L	1.46	J	1.51	J	NC
	METHYL TERT-BUTYL ETHER	µg/L	2.5	U	1	U	NC
	METHYLENE CHLORIDE	µg/L	5	U	2	U	NC
	NAPHTHALENE	µg/L	1.34	J	1	U	NC
	N-BUTYLBENZENE	µg/L	2.5	U	1	U	NC
	N-PROPYLBENZENE	µg/L	2.5	U	1	U	NC
	P-ISOPROPYLTOLUENE	µg/L	1.29	J	1	U	NC
	SEC-BUTYLBENZENE	µg/L	2.5	U	1	U	NC
	TERT-BUTYLBENZENE	µg/L	2.5	U	1	U	NC
	TOLUENE	µg/L	5.61		2.71		69.71
	TRICHLOROETHENE	µg/L	2.5	U	1	U	NC
	TRICHLOROFLUOROMETHANE	µg/L	5	U	2	U	NC
	XYLENES	µg/L	9.02	J	4.36	J	NC

Notes:
Please see Table 2 for definitions of qualifiers and reason codes.
FD - field duplicate.
GW - groundwater.
KAFB - Kirtland Air Force Base.
µg/L - micrograms per liter.
mg/L - milligram per liter.
NC - not calculated.
REG - regular/parent sample.
VQ - validation qualifier.

Appendix G-1 - Table 5 Field Duplicate Summary

		Location Code	KAFB-106MW2-I				
		Sample Number	106MW2I-P1P-112917		106MW2I-P1P-112917-FD		
		Sample Date	11/29/2017		11/29/2017		
		Sample Purpose	REG		FD		
		Sample Type	GW		GW		Relative Percent Difference
		Depth	--		--		
Test Group	**Parameter**	**Units**	**Result**	**VQ**	**Result**	**VQ**	
EDB	1,2-DIBROMOETHANE	µg/L	20.1		17.1		16.13
FLUORIMETRIC	FLUORESCEIN	PPB	7.694		-NA-		0.00
GASES	ACETYLENE	µg/L	10	U	10	U	NC
	ETHANE	µg/L	4	U	4	U	NC
	ETHYLENE	µg/L	2.24	J	1.99	J	NC
	METHANE	µg/L	17.2		16.3		5.37
	PROPANE	µg/L	6	U	6	U	NC
GEN CHEMISTRY	ACETIC ACID	MG/L	20.5		17.6		15.22
	ALKALINITY	MG/L	260		274		5.24
	BROMIDE	MG/L	0.599		0.600		0.17
	BUTYRIC ACID	MG/L	1	U	1	U	NC
	CHLORIDE	MG/L	42.9		42.8		0.23
	FORMIC ACID	MG/L	1	U	1	U	NC
	IODIDE	MG/L	0.75	U	0.75	U	NC
	LACTIC ACID	MG/L	1	U	1	U	NC
	NITROGEN, NITRATE-NITRITE	MG/L	0.375	U	0.375	U	NC
	O-PHOSPHATE (AS P)	MG/L	0.0200	U	0.0200	U	NC
	PROPIONIC ACID	MG/L	1	U	1	U	NC
	PYRUVIC ACID	MG/L	1	U	1	U	NC
	SULFATE	MG/L	2.37	J	2.42	J	NC
	VALERIC ACID	MG/L	1	U	1	U	NC
METALS, DISS	IRON	µg/L	18300		17800		2.77
	MANGANESE	µg/L	2810		2760		1.80
USGS	DELTA2H	PER MILLE	-87.37		-87.91		(0.62)
VOLATILES	1,1,2-TRICHLOROETHANE	µg/L	2.50	U	2.50	U	NC
	1,2,4-TRIMETHYLBENZENE	µg/L	54.9		57.7		4.97
	1,2-DIBROMOETHANE	µg/L	21.7		22.3		2.73
	1,2-DICHLOROETHANE	µg/L	1.72	J	1.93	J	NC
	1,3,5-TRIMETHYLBENZENE	µg/L	28.6		29.5		3.10
	2-BUTANONE	µg/L	16.6	J	16.8	J	NC
	2-CHLOROTOLUENE	µg/L	2.50	U	2.50	U	NC
	2-HEXANONE	µg/L	31.1		34.6		10.65
	4-METHYL-2-PENTANONE	µg/L	32.6		34.0		4.20
	ACETONE	µg/L	97.2		104		6.76
	BENZENE	µg/L	410		411		0.24
	CARBON DISULFIDE	µg/L	2.50	U	2.50	U	NC
	CHLOROMETHANE	µg/L	2.50	U	2.50	U	NC
	DICHLORODIFLUOROMETHANE	µg/L	5.00	U	5.00	U	NC
	ETHYLBENZENE	µg/L	31.3		32.5		3.76
	ISOPROPYLBENZENE	µg/L	16.2		16.9		4.23
	METHYL TERT-BUTYL ETHER	µg/L	2.50	U	2.50	U	NC

Appendix G-1 - Table 5 Field Duplicate Summary

VOLATILES	METHYLENE CHLORIDE	µg/L	5.00	U	5.00	U	NC
	NAPHTHALENE	µg/L	29.0		31.9		9.52
	N-BUTYLBENZENE	µg/L	1.72	J	1.89	J	NC
	N-PROPYLBENZENE	µg/L	3.59	J	4.06	J	NC
	P-ISOPROPYLTOLUENE	µg/L	47.0		49.3		4.78
	SEC-BUTYLBENZENE	µg/L	1.55	J	1.67	J	NC
	TERT-BUTYLBENZENE	µg/L	2.50	U	2.50	U	NC
	TOLUENE	µg/L	62.6		63.9		2.06
	TRICHLOROETHENE	µg/L	2.50	U	2.50	U	NC
	TRICHLOROFLUOROMETHANE	µg/L	5.00	U	5.00	U	NC
	XYLENES	µg/L	760		773		1.70

Notes:
Please see Table 2 for definitions of qualifiers and reason codes.
FD - field duplicate.
GW - groundwater.
KAFB - Kirtland Air Force Base.
µg/L - micrograms per liter.
mg/L - milligram per liter.
NC - not calculated.
REG - regular/parent sample.
VQ - validation qualifier.

Appendix G-1 - Table 5 Field Duplicate Summary

Test Group	Location Code		KAFB-106MW2-I				Relative Percent Difference
	Sample Number		106MW2I-P1R-102017		106MW2I-P1R-102017-FD		
	Sample Date		10/20/2017		10/20/2017		
	Sample Purpose		REG		FD		
	Sample Type		GW		GW		
	Depth		--		--		
	Parameter	Units	Result	VQ	Result	VQ	
FLUORIMETRIC	FLUORESCEIN	PPB	20.097		-NA-		0.00
USGS	DELTA2H	PER MILLE	-80.81		-81.53		(0.89)

Notes:
Please see Table 2 for definitions of qualifiers and reason codes.
FD - field duplicate.
GW - groundwater.
KAFB - Kirtland Air Force Base.
NC - not calculated.
ppb - parts per billion.
REG - regular/parent sample.
USGS - Unites States Geological Survey.
VQ - validation qualifier.

Appendix G-1 - Table 5 Field Duplicate Summary

		Location Code	KAFB-106MW2-I				
		Sample Number	106MW2I-P2P-030618		106MW2I-P2P-030618-FD		
		Sample Date	03/06/2018		03/06/2018		
		Sample Purpose	REG		FD		
		Sample Type	GW		GW		Relative Percent Difference
		Depth	--		--		
Test Group	**Parameter**	**Units**	**Result**	**VQ**	**Result**	**VQ**	
EDB	1,2-DIBROMOETHANE	µg/L	1.98	J+	1.61	J+	20.61
GASES	ACETYLENE	µg/L	10	U	10	U	NC
	ETHANE	µg/L	0.51	J	4	U	NC
	ETHYLENE	µg/L	2.84	J	3.2	J	NC
	METHANE	µg/L	211		220		4.18
	PROPANE	µg/L	6	U	6	U	NC
GEN CHEMISTRY	ACETIC ACID	MG/L	26.8		16.8		45.87
	ALKALINITY	MG/L	277		283		2.14
	BROMIDE	MG/L	0.251		0.251		0.00
	BUTYRIC ACID	MG/L	1	U	1	U	NC
	CHLORIDE	MG/L	26.4		26.5		0.38
	FORMIC ACID	MG/L	1	U	1	U	NC
	IODIDE	MG/L	2.2		2.2		0.00
	LACTIC ACID	MG/L	1.31		0.8	J	48.34
	NITROGEN, NITRATE-NITRITE	MG/L	0.375	U	0.375	U	NC
	O-PHOSPHATE (AS P)	MG/L	0.02	U	0.02	U	NC
	PROPIONIC ACID	MG/L	1		1	U	NC
	PYRUVIC ACID	MG/L	1	U	1	U	NC
	SULFATE	MG/L	1.77	J	1.74	J	NC
	VALERIC ACID	MG/L	1	U	1	U	NC
METALS, DISS	IRON	µg/L	12300		11500		6.72
	MANGANESE	µg/L	1920		1860		3.17
VOLATILES	1,1,2-TRICHLOROETHANE	µg/L	5	U	5	U	NC
	1,2,4-TRIMETHYLBENZENE	µg/L	38.7		42.2		8.65
	1,2-DIBROMOETHANE	µg/L	5	U	5	U	NC
	1,2-DICHLOROETHANE	µg/L	5	U	5	U	NC
	1,3,5-TRIMETHYLBENZENE	µg/L	23.9		25.6		6.87
	2-BUTANONE	µg/L	50	U	50	U	NC
	2-CHLOROTOLUENE	µg/L	5	U	5	U	NC
	2-HEXANONE	µg/L	14.9	J+	15	J+	NC
	4-METHYL-2-PENTANONE	µg/L	13.6	J	15.2	J	NC
	ACETONE	µg/L	48.5	J+	36.3	J+	NC
	BENZENE	µg/L	427		439		2.77
	CARBON DISULFIDE	µg/L	5	U	5	U	NC
	CHLOROMETHANE	µg/L	5	U	5	U	NC
	DICHLORODIFLUOROMETHANE	µg/L	10	U	10	U	NC
	ETHYLBENZENE	µg/L	89.8		90.5		0.78
	ISOPROPYLBENZENE	µg/L	44.6		45		0.89
	METHYL TERT-BUTYL ETHER	µg/L	5	U	5	U	NC
	METHYLENE CHLORIDE	µg/L	10	U	10	U	NC
	NAPHTHALENE	µg/L	17.5		18.5		5.56
	N-BUTYLBENZENE	µg/L	2.71	J	2.96	J	NC
	N-PROPYLBENZENE	µg/L	8.66	J	8.99	J	NC
	P-ISOPROPYLTOLUENE	µg/L	5	U	38.2		NC

Appendix G-1 - Table 5 Field Duplicate Summary

VOLATILES	SEC-BUTYLBENZENE	µg/L	2.52	J	2.57	J	NC
	TERT-BUTYLBENZENE	µg/L	5	U	5	U	NC
	TOLUENE	µg/L	217		221		1.83
	TRICHLOROETHENE	µg/L	5	U	5	U	NC
	TRICHLOROFLUOROMETHANE	µg/L	10	U	10	U	NC
	XYLENES	µg/L	356		369		3.59

Notes:
Please see Table 2 for definitions of qualifiers and reason codes.
FD - field duplicate.
GW - groundwater.
KAFB - Kirtland Air Force Base.
µg/L - micrograms per liter.
mg/L - milligram per liter.
NC - not calculated.
REG - regular/parent sample.
VQ - validation qualifier.

Appendix G-1 - Table 5 Field Duplicate Summary

		Location Code	KAFB-106MW2-I				
		Sample Number	106MW2I-P3P-111518		106MW2I-P3P-111518-FD		
		Sample Date	11/15/2018		11/15/2018		
		Sample Purpose	REG		FD		
		Sample Type	GW		GW		Relative Percent Difference
		Depth	--		--		
Test Group	**Parameter**	**Units**	**Result**	**VQ**	**Result**	**VQ**	
EDB	1,2-DIBROMOETHANE	µg/L	0.24		0.27		11.76
GASES	ACETYLENE	µg/L	10	U	10	U	NC
	ETHANE	µg/L	1.1	J	1	J	NC
	ETHYLENE	µg/L	1.1	J	1.1	J	NC
	METHANE	µg/L	2646		2704.5		2.19
	PROPANE	µg/L	1.1	J	1	J	NC
GEN CHEMISTRY	ACETIC ACID	MG/L	1	U	1	U	NC
	ALKALINITY	MG/L	350		350		0.00
	BROMIDE	MG/L	1		1		0.00
	BUTYRIC ACID	MG/L	1	U	1	U	NC
	CHLORIDE	MG/L	47		47		0.00
	FORMIC ACID	MG/L	0.5	J	0.5	J	NC
	IODIDE	MG/L	6.7		6.9		2.94
	LACTIC ACID	MG/L	1.2		1		18.18
	NITROGEN, NITRATE-NITRITE	MG/L	0.5	U	0.5	U	NC
	ORTHOPHOSPHATE	MG/L	0.15	UJ	0.15	UJ	NC
	PROPIONIC ACID	MG/L	1	U	1	U	NC
	PYRUVIC ACID	MG/L	1	U	1	U	NC
	SULFATE	MG/L	1	U	1	U	NC
	VALERIC ACID	MG/L	1	U	1	U	NC
METALS, DISS	IRON	µg/L	22000		21000		4.65
	MANGANESE	µg/L	3900		3800		2.60
VOLATILES	1,1,2-TRICHLOROETHANE	µg/L	50	U	50	U	NC
	1,2,4-TRIMETHYLBENZENE	µg/L	55	J	57	J	NC
	1,2-DIBROMOETHANE	µg/L	100	U	100	U	NC
	1,3,5-TRIMETHYLBENZENE	µg/L	33	J	50	U	NC
	2-BUTANONE	µg/L	1000	U	1000	U	NC
	2-CHLOROTOLUENE	µg/L	50	U	50	U	NC
	2-HEXANONE	µg/L	500	U	500	U	NC
	4-METHYL-2-PENTANONE	µg/L	500	U	500	U	NC
	ACETONE	µg/L	1000	U	1000	U	NC
	BENZENE	µg/L	630		610		3.23
	CARBON DISULFIDE	µg/L	200	U	200	U	NC
	CHLOROMETHANE	µg/L	100	U	100	U	NC
	ISOPROPYLBENZENE	µg/L	94	J	92	J	NC
	METHYL TERT-BUTYL ETHER	µg/L	50	U	50	U	NC
	METHYLENE CHLORIDE	µg/L	500	U	500	U	NC
	NAPHTHALENE	µg/L	500	U	500	U	NC
	N-BUTYLBENZENE	µg/L	100	U	100	U	NC
	N-PROPYLBENZENE	µg/L	100	U	100	U	NC
	P-ISOPROPYLTOLUENE	µg/L	100	U	100	U	NC
	SEC-BUTYLBENZENE	µg/L	100	U	100	U	NC

Appendix G-1 - Table 5 Field Duplicate Summary

VOLATILES	TERT-BUTYLBENZENE	µg/L	100	U	100	U	NC
	TOLUENE	µg/L	410		390		5.00
	TRICHLOROETHENE	µg/L	280		98	J	96.30
	TRICHLOROFLUOROMETHANE	µg/L	100	U	100	U	NC
	XYLENES	µg/L	430		400		7.23

Notes:
Please see Table 2 for definitions of qualifiers and reason codes.
FD - field duplicate.
GW - groundwater.
KAFB - Kirtland Air Force Base.
µg/L - micrograms per liter.
mg/L - milligram per liter.
NC - not calculated.
REG - regular/parent sample.
VQ - validation qualifier.

Appendix G-1 - Table 5 Field Duplicate Summary

		Location Code	KAFB-106MW2-S				
		Sample Number	106MW2S-P1R-101217		106MW2S-P1R-101217-FD		
		Sample Date	10/12/2017		10/12/2017		
		Sample Purpose	REG		FD		
		Sample Type	GW		GW		Relative Percent Difference
		Depth	--		--		
Test Group	**Parameter**	**Units**	**Result**	**VQ**	**Result**	**VQ**	
FLUORIMETRIC	FLUORESCEIN	PPB	1.535		1.527		0.52
USGS	DELTA2H	PER MILLE	-93.69		-93.42		(0.29)

Notes:
Please see Table 2 for definitions of qualifiers and reason codes.
FD - field duplicate.
GW - groundwater.
KAFB - Kirtland Air Force Base.
NC - not calculated.
ppb - parts per billion.
REG - regular/parent sample.
USGS - Unites States Geological Survey.
VQ - validation qualifier.

Appendix G-1 - Table 5 Field Duplicate Summary

		Location Code	KAFB-106MW2-S				
		Sample Number	106MW2S-P2P-041018		106MW2S-P2P-041018-FD		
		Sample Date	04/10/2018		04/10/2018		
		Sample Purpose	REG		FD		
		Sample Type	GW		GW		Relative Percent Difference
		Depth	--		--		
Test Group	**Parameter**	**Units**	**Result**	**VQ**	**Result**	**VQ**	
EDB	1,2-DIBROMOETHANE	µg/L	0.154		0.139		10.24
GASES	ACETYLENE	µg/L	10	U	10	U	NC
	ETHANE	µg/L	1.02	J	0.97	J	NC
	ETHYLENE	µg/L	5.5		5.02		9.13
	METHANE	µg/L	11800		11600		1.71
	PROPANE	µg/L	1.39	J	1.2	J	NC
GEN CHEMISTRY	ACETIC ACID	MG/L	113.5		118.4		4.23
	ALKALINITY	MG/L	399		382		4.35
	BROMIDE	MG/L	0.561		0.567		1.06
	BUTYRIC ACID	MG/L	1	U	1	U	NC
	CHLORIDE	MG/L	49.5		49.8		0.60
	FORMIC ACID	MG/L	2.1		2.8		28.57
	IODIDE	MG/L	18		19		5.41
	LACTIC ACID	MG/L	1	U	1		NC
	NITRATE	MG/L	0.2	U	0.2	U	NC
	NITRITE	MG/L	0.2	U	0.2	U	NC
	O-PHOSPHATE (AS P)	MG/L	0.623		0.571		8.71
	PROPIONIC ACID	MG/L	25.8		27.9		7.82
	PYRUVIC ACID	MG/L	1	U	1	U	NC
	SULFATE	MG/L	2	U	2	U	NC
	VALERIC ACID	MG/L	1.1		2.3		70.59
METALS, DISS	IRON	µg/L	12300	J-	12100	J-	1.64
	MANGANESE	µg/L	9470	J+	9420	J+	0.53
VOLATILES	1,1,2-TRICHLOROETHANE	µg/L	50	U	50	U	NC
	1,2,4-TRIMETHYLBENZENE	µg/L	194		189		2.61
	1,2-DIBROMOETHANE	µg/L	50	U	50	U	NC
	1,2-DICHLOROETHANE	µg/L	50	U	50	U	NC
	1,3,5-TRIMETHYLBENZENE	µg/L	70.3	J	69.2	J	NC
	2-BUTANONE	µg/L	500	U	500	U	NC
	2-CHLOROTOLUENE	µg/L	50	U	50	U	NC
	2-HEXANONE	µg/L	250	U	250	U	NC
	4-METHYL-2-PENTANONE	µg/L	250	U	250	U	NC
	ACETONE	µg/L	379	J	343	J	NC
	BENZENE	µg/L	2360		2210		6.56
	CARBON DISULFIDE	µg/L	50	U	50	U	NC
	CHLOROMETHANE	µg/L	50	U	50	U	NC
	DICHLORODIFLUOROMETHANE	µg/L	100	U	100	U	NC
	ETHYLBENZENE	µg/L	628		591		6.07
	ISOPROPYLBENZENE	µg/L	150		150		0.00
	METHYL TERT-BUTYL ETHER	µg/L	50	U	50	U	NC

Appendix G-1 - Table 5 Field Duplicate Summary

VOLATILES	METHYLENE CHLORIDE	µg/L	100	U	100	U	NC
	NAPHTHALENE	µg/L	78.6	J	80.1	J	NC
	N-BUTYLBENZENE	µg/L	50	U	50	U	NC
	N-PROPYLBENZENE	µg/L	52.4	J	50.4	J	NC
	P-ISOPROPYLTOLUENE	µg/L	83.4	J	81.7	J	NC
	SEC-BUTYLBENZENE	µg/L	50	U	50	U	NC
	TERT-BUTYLBENZENE	µg/L	50	U	50	U	NC
	TOLUENE	µg/L	5440		5190		4.70
	TRICHLOROETHENE	µg/L	50	U	50	U	NC
	TRICHLOROFLUOROMETHANE	µg/L	100	U	100	U	NC
	XYLENES	µg/L	1870		1810		3.26

Notes:
Please see Table 2 for definitions of qualifiers and reason codes.
FD - field duplicate.
GW - groundwater.
KAFB - Kirtland Air Force Base.
µg/L - micrograms per liter.
mg/L - milligram per liter.
NC - not calculated.
REG - regular/parent sample.
VQ - validation qualifier.

Appendix G-1 - Table 6. Contractual, Analytical,Technical and Holding Time Completeness

Analytical Method	Number of Analytes	Number of Samples	Number of Results	Contractually Incompliant Results	Number of Contract Compliant Results	Number of Rejected Results	Number of Useable Results	Contractual Completeness [Goal = 95 %] (percent)	Analytical Completeness [Goal = 90 %] (percent)	Technical Completeness [Goal = 95 %] (percent)	Holding Time Completeness [Goal = 100 %] (percent)
E300	1	193	193	0	193	0	193	100%	94.8%	100.%	100.%
E300M	7	193	1351	0	1351	0	1351	100%	96.%	100.%	100.%
E353.2	1	85	85	0	85	0	85	100%	100%	100.%	100.%
FLUORIMETRIC	1	110	110	0	110	0	110	100%	100%	100.%	100.%
IRMS	2	114	116 *	0	116	0	116	100%	100%	100.%	100.%
QUANTARRAY	30	61	1715 *	0	1715	0	1715	100%	100%	100.%	100.%
RSK-175	5	189	945	0	945	0	945	100%	96.2%	100.%	100.%
SM2320B	1	186	186	7	179	0	186	96.2%	94.1%	100.%	96.2%
SM4500PE	1	116	116	8	108	0	116	93.1%	90.5%	100.%	98.3%
SW6010C	2	186	372	28	344	0	372	92.5%	88.4%	100.%	100.%
SW8011	1	186	186	0	186	0	186	100%	77.4%	100.%	100.%
SW8260B	28	186	4995 *	4	4991	0	4995	99.9%	96.4%	100.%	99.9%
SW9056A	7	186	760 *	16	744	9	760	97.9%	92.8%	98.8%	98.3%

Notes:

% - percent.

Prepared by CB&I Federal Services LLC
2440 Louisiana Blvd. NE, Suite 300
Albuquerque, NM 87110
Tel: +1 505 262 8800
Fax: +1 505 262 8855
www.CBI.com

February 6, 2017

Ms. Katrina Wheelock
377 MSG/CEIE
2050 Wyoming Blvd SE
Kirtland Air Force Base, NM 87117-5270

Subject: Disposal of Soil Drill Cuttings from the Installation of Groundwater Monitoring Well KAFB-106MW1, Kirtland AFB, New Mexico
USACE Contract No. W9128F-12-D-003, Delivery Order 0025

Dear Ms. Wheelock:

CB&I is requesting permission to dispose of nonhazardous soil drill cuttings and plastic liners used in rolloff containers to the Kirtland Air Force Base (AFB) Construction and Demolition (C&D) debris landfill. The generation of and analyses performed on the soil drill cuttings are discussed below.

During January 2017, CB&I began installation on one nested groundwater monitoring well (KAFB-106MW1) for the Kirtland AFB Rapid Response Contract. KAFB-106MW1 is located in a undeveloped lot located just south of Randolph Avenue between Fuels Drive and the National Guard Building. The groundwater monitoring well was drilled using air rotary casing hammer drilling methods. Drill cuttings were containerized in plastic lined steel rolloffs pending laboratory analysis for waste characterization. Approximately 10 to 15 cubic yards of soil drill cuttings were generated for each 20-cubic yard rolloff container. Three rolloffs were sampled for KAFB-106MW1 and included in this letter.

The geologist collected a small amount of soil from each depth as the sediment exited the cyclone separator and was deposited in the rolloff; resulting in one composite sample for each rolloff. Three rolloffs were filled from KAFB-106MW1. The three composite samples were sent to Gulf Coast Analytical Laboratory for testing. The samples were analyzed for the required parameters per the Kirtland AFB Landfill Acceptance Memorandum (January 2009). The analytical results for the composite samples confirm that the drill cuttings are not considered to be hazardous waste and meet the requirements for disposal at the Kirtland C&D landfill.

CB&I requests your review of the attached analytical data and determination for disposal at Kirtland AFB C&D landfill. All three rolloff containers are owned by Advanced Chemical Transport and the numbers on the containers for disposal include –6607 (106MW1-IDW01), 0543 (106MW1-IDW02), and 0128 (106MW1-IDW03). Upon receiving notification of Kirtland AFB's acceptance of the soil and plastic, CB&I will coordinate transport of the rolloffs and disposal of the waste with Advanced Chemical Transport.

If you have any questions regarding this request, please contact me at (303) 486-2503. Thank you for your assistance.

Sincerely,

Caitlin LaChance
Geologist

Enclosures:
Empirical Laboratories, LLC Report No. 1701081 – Analytical Results for Drill Cuttings from Nested Groundwater Monitoring Well KAFB-106MW1 (106MW1-IDW01 through IDW03)

DEPARTMENT OF THE AIR FORCE
377TH AIR BASE WING (AFGSC)

9 February 2017

MEMORANDUM FOR: AFCEC/CZO

FROM: 377 MSG/CEIE (Solid Waste Program Manager)

SUBJECT: Landfill Disposal

Reference: CB&I Federal Services, LLC, letter dated: 6 February 2017
USACE Contract No. W9128F-12-D-003, Delivery Order 0025

Disposal of Soil from the Installation of Groundwater Monitoring Well KAFB-106MW1, Kirtland AFB, New Mexico

1. Authorization is granted to CB&I to dispose of soil from the installation of groundwater monitoring well KAFB-106MW1, in support of the Bulk Fuels Facility project, at the Kirtland AFB construction and demolition landfill. Debris will be delivered to the landfill by Advanced Chemical Transport, and will be in three Advanced Chemical Transport roll-offs, numbered 6607, 0543, and 0128. Debris will consist of excavated soil and plastic liners from roll-offs. Lab results are on file in the Solid Waste Management office. CB&I shall be issued a Kirtland AFB landfill pass for this disposal action. A copy of this letter will accompany each roll-off and be left with the gate keeper at the landfill.

2. Please direct questions to me at 853-2486.

KATRINA E. WHEELOCK
Solid Waste Program Manager
Environmental Management

Prepared by CB&I Federal Services LLC
2440 Louisiana Blvd. NE, Suite 300
Albuquerque, NM 87110
Tel: +1 505 262 8800
Fax: +1 505 262 8855
www.CBI.com

February 16, 2017

Ms. Katrina Wheelock
377 MSG/CEIE
2050 Wyoming Blvd SE
Kirtland Air Force Base, NM 87117-5270

Subject: Disposal of Soil Drill Cuttings from the Installation of Groundwater Monitoring Wells KAFB-106MW1 and KAFB-106MW2, Kirtland AFB, New Mexico USACE Contract No. W9128F-12-D-003, Delivery Order 0025

Dear Ms. Wheelock:

CB&I is requesting permission to dispose of nonhazardous soil drill cuttings and plastic liners used in rolloff containers to the Kirtland Air Force Base (AFB) Construction and Demolition (C&D) debris landfill. The generation of and analyses performed on the soil drill cuttings are discussed below.

During January 2017, CB&I began installation on two groundwater monitoring wells (KAFB-106MW1 and KAFB-106MW2) for the Kirtland AFB Rapid Response Contract. Both wells are located in an undeveloped lot located just south of Randolph Avenue between Fuels Drive and the National Guard Building. The groundwater monitoring wells were drilled using air rotary casing hammer drilling methods. Drill cuttings were containerized in plastic lined steel rolloffs pending laboratory analysis for waste characterization. Approximately 10 to 15 cubic yards of soil drill cuttings were generated for each 20-cubic yard rolloff container. One additional rolloff was sampled for KAFB-106MW1 and two rolloffs were sampled for KAFB-106MW2, and are included in this letter.

The geologist collected a small amount of soil from each depth as the sediment exited the cyclone separator and was deposited in the rolloff; resulting in one composite sample for each rolloff. One additional rolloff from KAFB-106MW1 and two rolloffs from KAFB-106MW2 were filled. The three composite samples were sent to Empirical Laboratories, LLC for testing. The samples were analyzed for the required parameters per the Kirtland AFB Landfill Acceptance Memorandum (January 2009). The analytical results for the composite samples confirm that the drill cuttings are not considered to be hazardous waste and meet the requirements for disposal at the Kirtland C&D landfill.

CB&I requests your review of the attached analytical data and determination for disposal at Kirtland AFB C&D landfill. All three rolloff containers are owned by Advanced Chemical Transport and the numbers on the containers for disposal include –9926 (106MW1-IDW04), 0129 (106MW2-IDW01), and 9823 (106MW2-IDW02). Upon receiving notification of Kirtland AFB's acceptance of the soil and plastic, CB&I will coordinate transport of the rolloffs and disposal of the waste with Advanced Chemical Transport.

If you have any questions regarding this request, please contact me at (505) 262-8942. Thank you for your assistance.

Sincerely,

Caitlin LaChance
Geologist

Enclosures:
Empirical Laboratories, LLC Report No. 1701168 – Analytical Results for Drill Cuttings from Nested Groundwater Monitoring Wells KAFB-106MW1 (106MW1-IDW04) and KAFB-106MW2 (106MW2-IDW01 and IDW02)

DEPARTMENT OF THE AIR FORCE
377TH AIR BASE WING (AFGSC)

23 February 2017

MEMORANDUM FOR: AFCEC/CZO

FROM: 377 MSG/CEIE (Solid Waste Program Manager)

SUBJECT: Landfill Disposal

Reference: CB&I Federal Services, LLC, letter dated: 16 February 2017
USACE Contract No. W9128F-12-D-003, Delivery Order 0025

Disposal of Soil from the Installation of Groundwater Monitoring Wells KAFB-106MW1 and KAFB-106MW2, Kirtland AFB, New Mexico

1. Authorization is granted to CB&I to dispose of soil from the installation of groundwater monitoring well KAFB-106MW1 and KAFB-106MW2, in support of the Bulk Fuels Facility project, at the Kirtland AFB construction and demolition landfill. Debris will be delivered to the landfill by Advanced Chemical Transport, and will be in three Advanced Chemical Transport roll-offs, numbered 9926, 0129, and 9823. Debris will consist of excavated soil and plastic liners from roll-offs. Lab results are on file in the Solid Waste Management office. CB&I shall be issued a Kirtland AFB landfill pass for this disposal action. A copy of this letter will accompany each roll-off and be left with the gate keeper at the landfill.

2. Please direct questions to me at 853-2486.

KATRINA E. WHEELOCK
Solid Waste Program Manager
Environmental Management

Prepared by CB&I Federal Services LLC
2440 Louisiana Blvd. NE, Suite 300
Albuquerque, NM 87110
Tel: +1 505 262 8800
Fax: +1 505 262 8855
www.CBI.com

February 21, 2017

Ms. Katrina Wheelock
377 MSG/CEIE
2050 Wyoming Blvd SE
Kirtland Air Force Base, NM 87117-5270

Subject: Disposal of Soil Drill Cuttings from the Installation of Groundwater Monitoring Well KAFB-106MW2, Kirtland AFB, New Mexico
USACE Contract No. W9128F-12-D-003, Delivery Order 0025

Dear Ms. Wheelock:

CB&I is requesting permission to dispose of nonhazardous soil drill cuttings and plastic liners used in rolloff containers to the Kirtland Air Force Base (AFB) Construction and Demolition (C&D) debris landfill. The generation of and analyses performed on the soil drill cuttings are discussed below.

During January 2017, CB&I began installation on one groundwater monitoring well (KAFB-106MW2) for the Kirtland AFB Rapid Response Contract. KAFB-106MW2 is located in an undeveloped lot located just south of Randolph Avenue between Fuels Drive and the National Guard Building. The groundwater monitoring well was drilled using air rotary casing hammer drilling methods. Drill cuttings were containerized in plastic lined steel rolloffs pending laboratory analysis for waste characterization. Approximately 10 to 15 cubic yards of soil drill cuttings were generated and placed in each 20-cubic yard rolloff container. Two additional rolloffs were sampled for KAFB-106MW2 and are included in this letter.

The geologist collected a small amount of soil from each depth as the sediment exited the cyclone separator and was deposited in the rolloff; resulting in one composite sample for each rolloff. Two additional rolloffs from KAFB-106MW2 were filled. The two composite samples were sent to Empirical Laboratories, LLC for testing. The samples were analyzed for the required parameters per the Kirtland AFB Landfill Acceptance Memorandum (January 2009). The analytical results for the composite samples confirm that the drill cuttings are not hazardous waste and meet the requirements for disposal at the Kirtland C&D landfill.

CB&I requests your review of the attached analytical data and determination for disposal at Kirtland AFB C&D landfill. Both rolloff containers are owned by Advanced Chemical Transport and the numbers on the containers for disposal are: 0519 (106MW2-IDW03) and 9901 (106MW2-IDW04). Upon receiving notification of Kirtland AFB's acceptance of the soil and plastic, CB&I will coordinate transport of the rolloffs and disposal of the waste with Advanced Chemical Transport.

If you have any questions regarding this request, please contact me at (505) 262-8942. Thank you for your assistance.

Sincerely,

Caitlin LaChance
Geologist

Enclosures:
Empirical Laboratories, LLC Report No. 1701242 – Analytical Results for Drill Cuttings from Nested Groundwater Monitoring Well KAFB-106MW2 (106MW2-IDW03 and IDW04)

DEPARTMENT OF THE AIR FORCE
377TH AIR BASE WING (AFGSC)

23 February 2017

MEMORANDUM FOR: AFCEC/CZO

FROM: 377 MSG/CEIE (Solid Waste Program Manager)

SUBJECT: Landfill Disposal

Reference: CB&I Federal Services, LLC, letter dated: 21 February 2017
USACE Contract No. W9128F-12-D-003, Delivery Order 0025

Disposal of Soil from the Installation of Groundwater Monitoring Well KAFB-106MW2, Kirtland AFB, New Mexico

1. Authorization is granted to CB&I to dispose of soil from the installation of groundwater monitoring well KAFB-106MW2, in support of the Bulk Fuels Facility project, at the Kirtland AFB construction and demolition landfill. Debris will be delivered to the landfill by Advanced Chemical Transport, and will be in two Advanced Chemical Transport roll-offs, numbered 0519 and 9901. Debris will consist of excavated soil and plastic liners from roll-offs. Lab results are on file in the Solid Waste Management office. CB&I shall be issued a Kirtland AFB landfill pass for this disposal action. A copy of this letter will accompany each roll-off and be left with the gate keeper at the landfill.

2. Please direct questions to me at 853-2486.

KATRINA E. WHEELOCK
Solid Waste Program Manager
Environmental Management

Prepared by CB&I Federal Services LLC
2440 Louisiana Blvd. NE, Suite 300
Albuquerque, NM 87110
Tel: +1 505 262 8800
Fax: +1 505 262 8855
www.CBI.com

March 7, 2017

Ms. Katrina Wheelock
377 MSG/CEIE
2050 Wyoming Blvd SE
Kirtland Air Force Base, NM 87117-5270

Subject: Disposal of Soil Drill Cuttings from the Installation of Groundwater Monitoring Well KAFB-106MW2, Kirtland AFB, New Mexico
USACE Contract No. W9128F-12-D-003, Delivery Order 0025

Dear Ms. Wheelock:

CB&I is requesting permission to dispose of nonhazardous soil drill cuttings and plastic liners used in rolloff containers to the Kirtland Air Force Base (AFB) Construction and Demolition (C&D) debris landfill. The generation of and analyses performed on the soil drill cuttings are discussed below.

During January 2017, CB&I began installation on groundwater monitoring well (KAFB-106MW2) for the Kirtland AFB Rapid Response Contract. KAFB-106MW2 is located in an undeveloped lot located just south of Randolph Avenue between Fuels Drive and the National Guard Building. The groundwater monitoring well was drilled using air rotary casing hammer drilling methods. Drill cuttings were containerized in plastic lined steel rolloffs pending laboratory analysis for waste characterization. Approximately 10 to 15 cubic yards of soil drill cuttings were generated and placed in each 20-cubic yard rolloff container. On February 14, 2017, two additional rolloffs were sampled for KAFB-106MW2 and are included in this letter.

The geologist collected a small amount of soil from each depth as the sediment exited the cyclone separator and was deposited in the rolloff; resulting in one composite sample for each rolloff. Two additional rolloffs from KAFB-106MW2 were filled. The two composite samples were sent to Empirical Laboratories, LLC for testing. Empirical Laboratories sent soil samples for total petroleum hydrocarbons – gasoline range organics to Microbac Laboratories for analysis, thus results are included in a separate laboratory report. The samples were analyzed for the required parameters per the Kirtland AFB Landfill Acceptance Memorandum (January 2009). The analytical results for the composite samples confirm that the drill cuttings are not hazardous waste and meet the requirements for disposal at the Kirtland C&D landfill.

CB&I requests your review of the attached analytical data and determination for disposal at Kirtland AFB C&D landfill. Both rolloff containers are owned by Advanced Chemical Transport and the numbers on the containers for disposal are: HTBIN1 (106MW2-IDW05) and 2057 (106MW2-IDW06). Upon receiving notification of Kirtland AFB's acceptance of the soil and plastic, CB&I will coordinate transport of the rolloffs and disposal of the waste with Advanced Chemical Transport.

If you have any questions regarding this request, please contact me at (505) 262-8942. Thank you for your assistance.

Sincerely,

Caitlin LaChance
Geologist

Enclosures:
Empirical Laboratories, LLC Report No. 1702112 – Analytical Results for Drill Cuttings from Nested Groundwater Monitoring Well KAFB-106MW2 (106MW2-IDW05 and IDW06)

Microbac Laboratories Report No. L17021003 – Analytical Results for TPH-GRO Analysis for Drill Cutting from Nested Groundwater Monitoring Well KAFB-106MW2 (106MW2-IDW05 and IDW06)

DEPARTMENT OF THE AIR FORCE
377TH AIR BASE WING (AFGSC)

15 March 2017

MEMORANDUM FOR: AFCEC/CZO

FROM: 377 MSG/CEIE (Solid Waste Program Manager)

SUBJECT: Landfill Disposal

Reference: CB&I Federal Services, LLC, letter dated: 7 March 2017
USACE Contract No. W9128F-12-D-003, Delivery Order 0025

Disposal of Soil from the Installation of Groundwater Monitoring Well KAFB-106MW2, Kirtland AFB, New Mexico

1. Authorization is granted to CB&I to dispose of soil from the installation of groundwater monitoring well KAFB-106MW2, in support of the Bulk Fuels Facility project, at the Kirtland AFB construction and demolition landfill. Debris will be delivered to the landfill by Advanced Chemical Transport, and will be in two Advanced Chemical Transport roll-offs, numbered HTBIN1 and 2057. Debris will consist of excavated soil and plastic liners from roll-offs. Lab results are on file in the Solid Waste Management office. CB&I shall be issued a Kirtland AFB landfill pass for this disposal action. A copy of this letter will accompany each roll-off and be left with the gate keeper at the landfill.

2. Please direct questions to me at 853-2486.

KATRINA E. WHEELOCK
Solid Waste Program Manager
Environmental Management

Prepared by CB&I Federal Services LLC
2440 Louisiana Blvd. NE, Suite 300
Albuquerque, NM 87110
Tel: +1 505 262 8800
Fax: +1 505 262 8855
www.CBI.com

March 20, 2017

Ms. Katrina Wheelock
377 MSG/CEIE
2050 Wyoming Blvd SE
Kirtland Air Force Base, NM 87117-5270

Subject: Disposal of Soil Drill Cuttings from the Installation of Groundwater Monitoring Well KAFB-106MW2 and Extraction Well KAFB-106EX2, Kirtland AFB, New Mexico
USACE Contract No. W9128F-12-D-003, Delivery Order 0025

Dear Ms. Wheelock:

CB&I is requesting permission to dispose of nonhazardous soil drill cuttings and plastic liners used in rolloff containers to the Kirtland Air Force Base (AFB) Construction and Demolition (C&D) debris landfill. The generation of and analyses performed on the soil drill cuttings are discussed below.

During January and February 2017, CB&I began installation on groundwater monitoring well KAFB-106MW2 and extraction well KAFB-106EX2 for the Kirtland AFB Rapid Response Contract. Both wells are located in an undeveloped lot located just south of Randolph Avenue between Fuels Drive and the Air National Guard Building. Both wells were drilled using air rotary casing hammer drilling methods. Drill cuttings were containerized in plastic lined steel rolloffs pending laboratory analysis for waste characterization. Approximately 10 to 15 cubic yards of soil drill cuttings were generated and placed in each 20-cubic yard rolloff container. On February 23, 2017, two additional rolloffs were sampled for KAFB-106MW2 and one rolloff was sampled for KAFB-106EX2; all three of which are included in this letter.

The geologist collected a small amount of soil from each depth as the sediment exited the cyclone separator and was deposited in the rolloff; resulting in one composite sample for each rolloff. Two additional rolloffs from KAFB-106MW2 and one rolloff from KAFB-106EX2 were filled. The three composite samples were sent to Empirical Laboratories, LLC for testing. The samples were analyzed for the required parameters per the Kirtland AFB Landfill Acceptance Memorandum (January 2009). The analytical results for the composite samples confirm that the drill cuttings are not hazardous waste and meet the requirements for disposal at the Kirtland C&D landfill.

CB&I requests your review of the attached analytical data and determination for disposal at Kirtland AFB C&D landfill. The three rolloff containers are owned by Advanced Chemical Transport and the numbers on the containers for disposal are: 20B-26 (106MW2-IDW07), HTBIN2 (106MW2-IDW08), and 0128 (106EX2-IDW01). Upon receiving notification of Kirtland AFB's acceptance of the soil and plastic, CB&I will coordinate transport of the rolloffs and disposal of the waste with Advanced Chemical Transport.

If you have any questions regarding this request, please contact me at (505) 262-8942. Thank you for your assistance.

Sincerely,

Caitlin LaChance
Geologist

Enclosures:
Empirical Laboratories, LLC Report No. 1702210 – Analytical Results for Drill Cuttings from Nested Groundwater Monitoring Well KAFB-106MW2 (106MW2-IDW07 and IDW08) and Extraction Well KAFB-106EX2 (106EX2-IDW01)

IDW Soil Analytical Data Table for Samples 106MW2-IDW07, 106MW2-IDW08, and 106EX2-IDW01

DEPARTMENT OF THE AIR FORCE
377TH AIR BASE WING (AFGSC)

21 March 2017

MEMORANDUM FOR: AFCEC/CZO

FROM: 377 MSG/CEIE (Solid Waste Program Manager)

SUBJECT: Landfill Disposal

Reference: CB&I Federal Services, LLC, letter dated: 20 March 2017
USACE Contract No. W9128F-12-D-003, Delivery Order 0025

Disposal of Soil Drill Cuttings from the Installation of Groundwater Monitoring Well KAFB-106MW2 and Extraction Well KAFB-106EX2, Kirtland AFB, New Mexico

1. Authorization is granted to CB&I to dispose of soil from the installation of groundwater monitoring well KAFB-106MW2 and extraction well KAFB-106EX2, in support of the Bulk Fuels Facility project, at the Kirtland AFB construction and demolition landfill. Debris will be delivered to the landfill by Advanced Chemical Transport, and will be in three Advanced Chemical Transport roll-offs, numbered 20B-26, HTBIN2, and 0128. Debris will consist of excavated soil and plastic liners from roll-offs. Lab results are on file in the Solid Waste Management office. CB&I shall be issued a Kirtland AFB landfill pass for this disposal action. A copy of this letter will accompany each roll-off and be left with the gate keeper at the landfill.

2. Please direct questions to me at 853-2486.

KATRINA E. WHEELOCK
Solid Waste Program Manager
Environmental Management

Prepared by CB&I Federal Services LLC
2440 Louisiana Blvd. NE, Suite 300
Albuquerque, NM 87110
Tel: +1 505 262 8800
Fax: +1 505 262 8855
www.CBI.com

March 28, 2017

Ms. Katrina Wheelock
377 MSG/CEIE
2050 Wyoming Blvd SE
Kirtland Air Force Base, NM 87117-5270

Subject: Disposal of Soil Drill Cuttings from the Installation of Extraction Well KAFB-106EX2, Kirtland AFB, New Mexico
USACE Contract No. W9128F-12-D-003, Delivery Order 0025

Dear Ms. Wheelock:

CB&I is requesting permission to dispose of nonhazardous soil drill cuttings and plastic liners used in rolloff containers to the Kirtland Air Force Base (AFB) Construction and Demolition (C&D) debris landfill. The generation of and analyses performed on the soil drill cuttings are discussed below.

During February 2017, CB&I began installation on extraction well KAFB-106EX2 for the Kirtland AFB Rapid Response Contract. KAFB-106EX2 is located in an undeveloped lot located just south of Randolph Avenue between Fuels Drive and the Air National Guard Building. The extraction well was drilled using air rotary casing hammer drilling methods. Drill cuttings were containerized in plastic lined steel rolloffs pending laboratory analysis for waste characterization. Approximately 10 to 15 cubic yards of soil drill cuttings were generated and placed in each 20-cubic yard rolloff container. On March 2, 2017, two additional rolloffs were sampled for KAFB-106EX2 and are included in this letter.

The geologist collected a small amount of soil from each depth as the sediment exited the cyclone separator and was deposited in the rolloff; resulting in one composite sample for each rolloff. Two additional rolloffs from KAFB-106EX2 were filled. The two composite samples were sent to Empirical Laboratories, LLC for testing. The samples were analyzed for the required parameters per the Kirtland AFB Landfill Acceptance Memorandum (January 2009). The analytical results for the composite samples confirm that the drill cuttings are not hazardous waste and meet the requirements for disposal at the Kirtland C&D landfill.

CB&I requests your review of the attached analytical data and determination for disposal at Kirtland AFB C&D landfill. The two rolloff containers are owned by Advanced Chemical Transport and the numbers on the containers for disposal are: 0543 (106EX2-IDW02) and 0607 (106EX2-IDW03). Upon receiving notification of Kirtland AFB's acceptance of the soil and plastic, CB&I will coordinate transport of the rolloffs and disposal of the waste with Advanced Chemical Transport.

If you have any questions regarding this request, please contact me at (505) 262-8942. Thank you for your assistance.

Sincerely,

Caitlin LaChance
Geologist

Enclosures:
Empirical Laboratories, LLC Report No. 1703043 – Analytical Results for Drill Cuttings from Extraction Well KAFB-106EX2 (106EX2-IDW02 and 106EX2-IDW03)

IDW Soil Analytical Data Table for Samples 106EX2-IDW02 and 106EX2-IDW03

DEPARTMENT OF THE AIR FORCE
377TH AIR BASE WING (AFGSC)

06 April 2017

MEMORANDUM FOR: AFCEC/CZO

FROM: 377 MSG/CEIE (Solid Waste Program Manager)

SUBJECT: Landfill Disposal

Reference: CB&I Federal Services, LLC, letter dated: 28 March 2017
USACE Contract No. W9128F-12-D-003, Delivery Order 0025

Disposal of Soil Drill Cuttings from the Installation of Extraction Well KAFB-106EX2, Kirtland AFB, New Mexico

1. Authorization is granted to CB&I to dispose of soil from the installation of extraction well KAFB-106EX2, in support of the Bulk Fuels Facility project, at the Kirtland AFB construction and demolition landfill. Debris will be delivered to the landfill by Advanced Chemical Transport, and will be in two Advanced Chemical Transport roll-offs, numbered 0543 and 0607. Debris will consist of excavated soil and plastic liners from roll-offs. Lab results are on file in the Solid Waste Management office. CB&I shall be issued a Kirtland AFB landfill pass for this disposal action. A copy of this letter will accompany each roll-off and be left with the gate keeper at the landfill.

2. Please direct questions to me at 853-2486.

KATRINA E. WHEELOCK
Solid Waste Program Manager
Environmental Management

Prepared by CB&I Federal Services LLC
2440 Louisiana Blvd. NE, Suite 300
Albuquerque, NM 87110
Tel: +1 505 262 8800
Fax: +1 505 262 8855
www.CBI.com

April 5, 2017

Ms. Katrina Wheelock
377 MSG/CEIE
2050 Wyoming Blvd SE
Kirtland Air Force Base, NM 87117-5270

Subject: Disposal of Soil Drill Cuttings from the Installation of Extraction Well KAFB-106EX1, Kirtland AFB, New Mexico
USACE Contract No. W9128F-12-D-003, Delivery Order 0025

Dear Ms. Wheelock:

CB&I is requesting permission to dispose of nonhazardous soil drill cuttings and plastic liners used in rolloff containers to the Kirtland Air Force Base (AFB) Construction and Demolition (C&D) debris landfill. The generation of and analyses performed on the soil drill cuttings are discussed below.

During March 2017, CB&I began installation on extraction well KAFB-106EX1 for the Kirtland AFB Rapid Response Contract. KAFB-106EX1 is located in an undeveloped lot located just south of Randolph Avenue between Fuels Drive and the Air National Guard Building. The extraction well was drilled using air rotary casing hammer drilling methods. Drill cuttings were containerized in plastic lined steel rolloffs pending laboratory analysis for waste characterization. Approximately 10 to 15 cubic yards of soil drill cuttings were generated and placed in each 20-cubic yard rolloff container. On March 13, 2017, four rolloffs were sampled for KAFB-106EX1 and are included in this letter.

The geologist collected a small amount of soil from each depth as the sediment exited the cyclone separator and was deposited in the rolloff; resulting in one composite sample for each rolloff. Four rolloffs from KAFB-106EX1 were filled. The four composite samples were sent to Empirical Laboratories, LLC for testing. The samples were analyzed for the required parameters per the Kirtland AFB Landfill Acceptance Memorandum (January 2009). The analytical results for the composite samples confirm that the drill cuttings are not hazardous waste and meet the requirements for disposal at the Kirtland C&D landfill.

CB&I requests your review of the attached analytical data and determination for disposal at Kirtland AFB C&D landfill. The four rolloff containers are owned by Advanced Chemical Transport and the numbers on the containers for disposal are: 9901 (106EX1-IDW01), 9823 (106EX1-IDW02), 0129 (106EX1-IDW03), and 9926 (106EX1-IDW04). Upon receiving notification of Kirtland AFB's acceptance of the soil and plastic, CB&I will coordinate transport of the rolloffs and disposal of the waste with Advanced Chemical Transport.

If you have any questions regarding this request, please contact me at (505) 262-8942. Thank you for your assistance.

Sincerely,

Caitlin LaChance
Geologist

Enclosures:
Empirical Laboratories, LLC Report No. 1703136 – Analytical Results for Drill Cuttings from Extraction Well KAFB-106EX1 (106EX1-IDW01 through 106EX1-IDW04)

IDW Soil Analytical Data Table for Samples 106EX1-IDW01 through 106EX1-IDW04

DEPARTMENT OF THE AIR FORCE
377TH AIR BASE WING (AFGSC)

06 April 2017

MEMORANDUM FOR: AFCEC/CZO

FROM: 377 MSG/CEIE (Solid Waste Program Manager)

SUBJECT: Landfill Disposal

Reference: CB&I Federal Services, LLC, letter dated: 5 April 2017
USACE Contract No. W9128F-12-D-003, Delivery Order 0025

Disposal of Soil Drill Cuttings from the Installation of Extraction Well KAFB-106EX1, Kirtland AFB, New Mexico

1. Authorization is granted to CB&I to dispose of soil from the installation of extraction well KAFB-106EX1, in support of the Bulk Fuels Facility project, at the Kirtland AFB construction and demolition landfill. Debris will be delivered to the landfill by Advanced Chemical Transport, and will be in four Advanced Chemical Transport roll-offs, numbered 9901, 9823, 0129, and 9926. Debris will consist of excavated soil and plastic liners from roll-offs. Lab results are on file in the Solid Waste Management office. CB&I shall be issued a Kirtland AFB landfill pass for this disposal action. A copy of this letter will accompany each roll-off and be left with the gate keeper at the landfill.

2. Please direct questions to me at 853-2486.

KATRINA E. WHEELOCK
Solid Waste Program Manager
Environmental Management

Prepared by CB&I Federal Services LLC
2440 Louisiana Blvd. NE, Suite 300
Albuquerque, NM 87110
Tel: +1 505 262 8800
Fax: +1 505 262 8855
www.CBI.com

April 12, 2017

Ms. Katrina Wheelock
377 MSG/CEIE
2050 Wyoming Blvd SE
Kirtland Air Force Base, NM 87117-5270

Subject: Disposal of Soil Drill Cuttings from the Installation of Injection Well KAFB-106IN1, Kirtland AFB, New Mexico
USACE Contract No. W9128F-12-D-003, Delivery Order 0025

Dear Ms. Wheelock:

CB&I is requesting permission to dispose of nonhazardous soil drill cuttings and plastic liners used in rolloff containers to the Kirtland Air Force Base (AFB) Construction and Demolition (C&D) debris landfill. The generation of and analyses performed on the soil drill cuttings are discussed below.

During March 2017, CB&I began installation on injection well KAFB-106IN1 for the Kirtland AFB Rapid Response Contract. KAFB-106IN1 is located in an undeveloped lot located just south of Randolph Avenue between Fuels Drive and the Air National Guard Building. The injection well was drilled using air rotary casing hammer drilling methods. Drill cuttings were containerized in plastic lined steel rolloffs pending laboratory analysis for waste characterization. Approximately 10 to 15 cubic yards of soil drill cuttings were generated and placed in each 20-cubic yard rolloff container. On March 20, 2017, four rolloffs were sampled for KAFB-106IN1 and are included in this letter.

The geologist collected a small amount of soil from each depth as the sediment exited the cyclone separator and was deposited in the rolloff; resulting in one composite sample for each rolloff. Four rolloffs from KAFB-106IN1 were filled. The four composite samples were sent to Empirical Laboratories, LLC for testing. The samples were analyzed for the required parameters per the Kirtland AFB Landfill Acceptance Memorandum (January 2009). The analytical results for the composite samples confirm that the drill cuttings are not hazardous waste and meet the requirements for disposal at the Kirtland C&D landfill.

CB&I requests your review of the attached analytical data and determination for disposal at Kirtland AFB C&D landfill. The four rolloff containers are owned by Advanced Chemical Transport and the numbers on the containers for disposal are: 2082 (106IN1-IDW01), HTBIN1 (106IN1-IDW02), 2057 (106IN1-IDW03), and 9713 (106IN1-IDW04). Upon receiving notification of Kirtland AFB's acceptance of the soil and plastic, CB&I will coordinate transport of the rolloffs and disposal of the waste with Advanced Chemical Transport.

If you have any questions regarding this request, please contact me at (505) 262-8942. Thank you for your assistance.

Sincerely,

Caitlin LaChance
Geologist

Enclosures:
Empirical Laboratories, LLC Report No. 1703187 – Analytical Results for Drill Cuttings from Injection Well KAFB-106IN1 (106IN1-IDW01 through 106IN1-IDW04)

IDW Soil Analytical Data Table for Samples 106IN1-IDW01 through 106IN1-IDW04

DEPARTMENT OF THE AIR FORCE
377TH AIR BASE WING (AFGSC)

14 April 2017

MEMORANDUM FOR: AFCEC/CZO

FROM: 377 MSG/CEIE (Solid Waste Program Manager)

SUBJECT: Landfill Disposal

Reference: CB&I Federal Services, LLC, letter dated: 12 April 2017
USACE Contract No. W9128F-12-D-003, Delivery Order 0025

Disposal of Soil Drill Cuttings from the Installation of Injection Well KAFB-106IN1, Kirtland AFB, New Mexico

1. Authorization is granted to CB&I to dispose of soil from the installation of injection well KAFB-106IN1, in support of the Bulk Fuels Facility project, at the Kirtland AFB construction and demolition landfill. Debris will be delivered to the landfill by Advanced Chemical Transport, and will be in four Advanced Chemical Transport roll-offs, numbered 2082, HTNIB1, 2057, and 9713. Debris will consist of excavated soil and plastic liners from roll-offs. Lab results are on file in the Solid Waste Management office. CB&I shall be issued a Kirtland AFB landfill pass for this disposal action. A copy of this letter will accompany each roll-off and be left with the gate keeper at the landfill.

2. Please direct questions to me at 853-2486.

KATRINA E. WHEELOCK
Solid Waste Program Manager
Environmental Management

Prepared by CB&I Federal Services LLC
2440 Louisiana Blvd. NE, Suite 300
Albuquerque, NM 87110
Tel: +1 505 262 8800
Fax: +1 505 262 8855
www.CBI.com

February 9, 2017

Subject: Corrective Action Report for Accidental Soil Release
Kirtland Air Force Base, New Mexico

This Corrective Action Report is submitted pursuant to the requirements specified in Section 1.27 of the Kirtland Air Force Base's (AFB) Hazardous Waste Treatment Facility Operating Permit, (Environmental Protection Agency [EPA] Identification Number NM9570024423) and Section 20.6.2.1203 of the New Mexico Administrative Code. This Report describes the release of semi-saturated soil to the ground surface, the corrective actions implemented, and discusses analytical results from the post-removal confirmation and characterization samples.

Background Information

Facility Owner:

Eric H. Froehlich, Colonel, USAF 377 ABW/CC
2000 Wyoming Boulevard SE
Kirtland AFB NM 87117-5600

Facility Operator:

CB&I Federal Services, LLC
Kathleen Romalia, Project Manager; Tara Kunkel, Task Lead; and Bruce Burke, Construction Manager
2440 Louisiana Boulevard NE, Suite 300
Albuquerque, NM 87110
Phone: (505) 262-8800

Facility:

Construction Area, In situ Bioremediation Pilot Test, Kirtland AFB, New Mexico. The construction area is located just south of Randolph Road, between Fuels Drive and the National Guard Building in an undeveloped lot.

Description of Release

On January 25, 2017 at 12:30 p.m. approximately ¼ to ½ cubic yards of semi-saturated soil was released to the ground surface at the Kirtland AFB in situ bioremediation pilot test construction area, located immediately south of Randolph Road. The spilled soil covered an area of approximately 30 inches wide by 10 feet long and 6 inches deep. Attachment 1 shows the pilot test area and location of the spilled soil. The spill was reported both verbally and in written format to the New Mexico Environment Department (NMED) Hazardous Waste Bureau within twenty-four hours.

While attempting to move a roll-off bin, the waste transportation and disposal company tipped up the front end of the bin and the semi-saturated soil spilled over the roll-off tailgate and onto the ground surface within the fenced construction area. The silt fence installed along the southern edge of the construction site stopped the spilled soil from migrating beyond the construction area fencing. Once the spill was noticed, the driver immediately lowered the roll-off bin so that it was parallel to ground surface.

The roll-off bin contained soil cuttings generated during drilling of groundwater monitoring well KAFB-106MW2 and Hydrosorb® polymer material (powdery solid) that was placed in the roll-off bin for the purpose of adsorbing free liquids in the saturated soil prior to disposal. The Safety Data Sheet for the Hydrosorb® is included as Attachment 2. Hydrosorb® is used as an industry standard material for the

purpose of dehydrating saturated soil and can be disposed of at any approved solid waste landfill as identified in Section XIII of the attached Safety Data Sheet. A waste characterization sample had been collected previously from the roll-off prior to the soil spill for disposal purposes; however, analytical results are still pending. The chemical composition of the soil cuttings at the time of the spill was unknown. The roll-off bin from which the spill occurred contained soil cuttings from the depth interval of 500 to 557 feet below ground surface. A subsequent characterization sample was collected from the roll-off bin and is discussed in the sections below.

Corrective Action

The spilled soil was removed from the ground surface using a vacuum truck and was placed back into the same lined roll-off bin. The exterior boundary of the spill area was identified and barricaded off. The native soil beneath the spill footprint was excavated to a depth of approximately 2 to 3 inches to ensure any impacted soil was removed. Excavated soil was containerized within the same roll-off. Photos of the spilled soil and cleaned up site are included in Attachment 3. The roll-off was further dehydrated by thoroughly mixing the semi-saturated cuttings with additional drying agents and a secondary internal linear was installed under the roll-off tarp prior to relocating the bin.

Three soil samples were collected using Encore® samplers on January 31, 2017 upon completion of excavation activities. Samples were collected from the following locations: 1) a characterization sample from the roll-off containing the spilled material, 2) a confirmation sample from the excavated spill footprint, and 3) a background sample located parallel to the spill site, outside of the fenced construction area. Attachment 1 shows the location of the confirmation and background samples. The purpose of the confirmation sample was to determine if all potentially impacted soil had been removed. A background soil sample was collected from a location outside of the construction area to determine if there are any existing constituents in the soil unrelated to the spilled soil. The soil samples were submitted to Empirical Laboratories LLC in Nashville, Tennessee for analysis of Volatile Organic Compounds (VOCs) (EPA Method SW8260), Semi-Volatile Organic Compounds (SVOCs) (EPA Method SW8270), and metals (iron, manganese, and lead) (EPA Method SW6010).

Analytical Results

Analytical results are provided in Attachment 4, which includes a summary analytical data table of detected analytes and the final laboratory report. Analytical results from the soil samples were compared to the NMED residential soil screening levels (SSLs) (NMED, 2015).

Roll-off Characterization Soil Sample

A representative soil sample was collected from the roll-off bin from which the spill occurred to characterize any potential constituents of concern. The spilled soil does not contain any constituents that exceed the NMED residential SSLs. Results are presented below.

- No VOCs were detected in the soil sample collected from the spilled soil.
- Two SVOCs, di-n-butylphthalate and bis(2-ethylhexyl)phthalate, were detected in the soil sample with concentrations of 0.379 mg/kg and 0.186 mg/kg, respectively. Both of these results were J-qualified and below NMED residential SSLs.
- Iron, lead, and manganese were all detected in the spilled soil sample with concentrations of 6,120, 2.29, and 109 mg/kg, respectively, which are below respective NMED residential SSLs.

Post-Removal Confirmation Soil Sample

One post-removal confirmation soil sample was collected in the center of the excavated spill footprint. The confirmation soil sample does not contain any constituents that exceed the NMED residential SSLs. Results are presented below.

- No VOCs were detected in the confirmation soil sample.

- Six SVOCs were detected in the confirmation sample: benzo(b)fluoranthene, di-n-butylphthalate, bis(2-ethylhexyl)phthalate, fluoranthene, phenanthrene, and pyrene. All detected SVOC results were J-qualified below NMED residential SSLs.
- Iron, lead, and manganese were all detected in the confirmation soil sample with concentrations of 7,590, 13.5, and 117 mg/kg, respectively, which are below respective NMED residential SSLs.

Background Soil Sample

One background soil sample was collected from a location outside of the fenced construction area, approximately 45 feet to the west of the confirmation sample location. The background soil sample does not contain any constituents that exceed the NMED residential SSLs. Results are presented below.

- No VOCs were detected in the background soil sample.
- Seven SVOCs were detected in the background soil sample: benzo(b)fluoranthene, chrysene, di-n-butylphthalate, bis(2-ethylhexyl)phthalate, fluoranthene, phenanthrene, and pyrene. All detected SVOC results were J-qualified, with the exception of bis(2-ethylhexyl)phthalate, which had no qualifier and was detected at a concentration of 0.685 mg/kg. All detected SVOC results were below NMED residential SSLs.
- Iron, lead, and manganese were all detected in the background soil sample with concentrations of 7,680, 16.5, and 125 mg/kg, respectively, which were below respective NMED residential SSLs.

Analytical Results Conclusions

Two SVOCs, di-n-butylphthalate and bis(2-ethylhexyl)phthalate, were detected with very low concentrations in all three soil samples. These SVOCs are commonly found in many plastic products such as disposable sample gloves, soil scoops, and laboratory equipment.

All detectable SVOCs in the post-removal confirmation soil sample were also detected in the background soil sample. Of the seven detected SVOCs, four are polynuclear aromatic hydrocarbons (PAHs): benzo(b)fluoranthene, chrysene, fluoranthene, and pyrene. Detectable concentrations of PAHs likely originated from an outside source that was not connected with the construction site, as they were not detected in the sample collected from the spilled soil. Randolph Road is located approximately 30 to 40 feet from the northern extent of the construction area. Prior to the initiation of construction activities the undeveloped lot was used as an overflow parking lot for the National Guard during weekend activities. Runoff from the asphalt road or from vehicle exhaust are the likely sources of PAH compounds in the background and confirmation soil samples.

Detected analytes in all samples were below NMED residential SSLs.

Proposed Actions to Further Prevent Discharges of this Nature

All roll-off bins containing saturated soil cuttings must be sufficiently “dewatered” using Hydrosorb® and allowed to stabilize, typically 2 to 3 days, prior to moving the roll-off bins. Additionally, Hydrosorb® will be placed in the roll-off bin prior to placement of saturated soil to begin immediate adsorption of the water once waste is placed in container.

ATTACHMENT 1

Soil Spill and Characterization Sample Locations

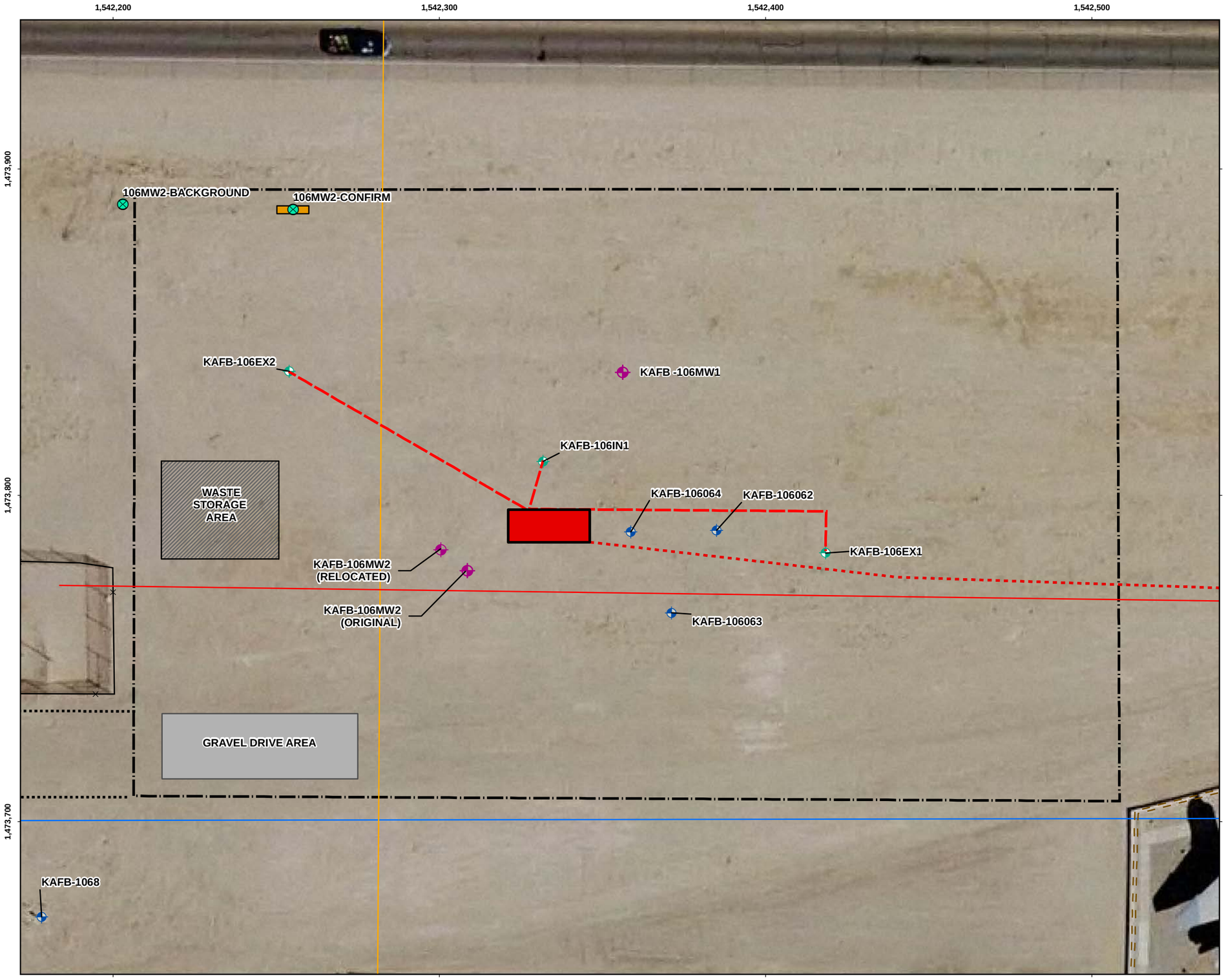

Legend

- Spill Characterization Soil Sample Locations
- Monitoring Well
- Pilot Test Injection/Extraction Well
- Pilot Test Monitoring Well
- Wall Line
- Natural Gas Line
- Wastewater Line
- Water Line
- Electrical Cable Line
- Impacted Soil
- Construction Fence Area
- Truck Exit Route
- Pilot Test Trench Location for Water Pipe and Subsurface Electrical
- Pilot Test System Location
- Pilot Test Existing Electrical Tie-in
- Proposed Electrical Service Line

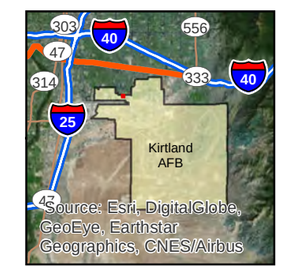

SITE LOCATION

Revision Date: 02/08/17

N

0 7.5 15 30

Feet

1 inch = 30 feet

Projection : NAD83 State Plane New Mexico Central FIPS3002 Feet

ATTACHMENT 1

SOIL SPILL AND SAMPLE LOCATIONS

H:\Kirtland_AFB\GIS_Documents\Project_Maps\ESTCP\ECarpioESRI Data Solutions TeamKAFB_ESTCP010_Attach1_Soilspill.mxd 02/08/17

ATTACHMENT 2

Safety Data Sheet Hydrosorb®

M² Polymer Technologies, Inc.
PO Box 365
West Dundee, IL 60118 USA
Tel. 847-836-1393
Fax. 847-836-6483

SAFETY DATA SHEET: May be used to comply with OSHA's Hazard Communication Standard, 29 CFR 1910.1200. Standard must be consulted for specific requirements.

EFFECTIVE DATE: January 2, 2014

SECTION I CHEMICAL PRODUCT & SUPPLIER'S IDENTIFICATION

Product Name: **Waste Lock® 770**
Chemical Name: Sodium Polyacrylate, Crosslinked

M² Polymer Technologies, Inc.
P.O. Box 365
West Dundee, IL 60118

Telephone Number for Information: 847/836-1393
Last Update : January 2, 2014

SECTION II HAZARD IDENTIFICATION

Component Information/Information on Non-Hazardous Components

The components of this product are not regulated as hazardous under 29 CFR and 49 CFR. However, the manufacturer recognizes the potential for respiratory tract irritation as a result of inhalation of this material as a respirable dust. See Sections 8, 11, 14 and 15 for further information.

Emergency Overview

Sodium polyacrylate is a white, granular, odorless polymer that forms a gel-like material with water. It is insoluble in water and causes slippery conditions when wet. Although not regulated as a hazardous material, the respirable dust is a potential respiratory tract irritant. An eight-hour exposure limit of 0.05 mg/m³ is recommended.

Potential Health Effects - Eyes

Dust may cause burning, drying, itching and other discomfort resulting in reddening of the eyes.

Potential Health Effects - Skin

Dust exposure, such as in manufacturing, may aggravate existing skin conditions due to drying.

Potential Health Effects - Ingestion

Not a likely route of entry. Tests show that polyacrylate absorbents are non-toxic if ingested. However, as in the instance of any non-food consumption, seek medical attention in the event of any adverse symptoms.

Potential Health Effects - Inhalation

Respirable dust exposure may cause respiratory tract & lung irritation and may aggravate existing respiratory conditions.

HMIS Ratings: Health 1 Fire 1 Reactivity 0

Hazard Scale: 0=Minimal 1=Slight 2=Moderate 3=Serious 4=Severe *=Chronic Hazard

SECTION III COMPOSITION / INGREDIENT INFORMATION

CAS #	Component	Percent
09003-04-7	Sodium polyacrylate	>99 %
Not Available	Post Treated – Trade Secret	< 0.5 %

HMIS Ratings: Health 1 Fire 1 Reactivity 0

Hazard Scale: 0=Minimal 1=Slight 2=Moderate 3=Serious 4=Severe *=Chronic Hazard

SECTION IV FIRST AID MEASURES

First Aid - Eyes

Immediately flush eyes with water for at least 15 minutes.

First Aid - Skin

Remove polyacrylate absorbent dust from skin using soap and water.

First Aid - Ingestion

Non-toxic. However, if adverse symptoms appear, seek medical attention.

Firs Aid - Inhalation

If inhaled, move to source of fresh air. Seek medical attention if symptoms persist.

SECTION V FIRE FIGHTING MEASURES

General Fire Hazards

No recognized fire hazards associated with the product.

Upper Flammable Limit (UFL):	**NE**
Lower Flammable Limit (LFL):	**NE**
Method Used:	**None**
Flash Point:	**None**
Flammability Classification:	**None**

Hazardous Combustion Products

None known.

Extinguishing Media

Dry chemical, foam, carbon dioxide, water fog. Slippery conditions are created if spilled products comes in contact with water.

Fire Fighting Equipment/Instructions

Firefighters should wear full protective clothing including self contained breathing apparatus,

NFPA Ratings: Health=1 Fire=1 Reactivity=0

Hazard Scale: 0=Minimal 1=Slight 2=Moderate 3=Serious 4=Severe

SECTION VI ACCIDENTAL RELEASE MEASURES

Containment Procedures

Sweep or vacuum material when possible and shovel into a waste container.

Clean Up Procedures

Use caution if product comes in contact with water as slippery conditions may result. Waste residual may be flushed down a drain with water for normal wastewater treatment. This is a non-hazardous waste suitable for disposal in any approved solid waste landfill.

Evacuation Procedures

None required.

Special Procedures

Avoid respirable dust. Wear a nuisance style dust mask if dusty conditions occur.

SECTION VII HANDLING AND STORAGE

Handling Procedures

Handle as an eye and respiratory tract irritant.

Storage Procedures

Store in a dry, closed container.

SECTION VIII EXPOSURE CONTROLS / PERSONAL PROTECTION

Exposure Guidelines

I. General Product Information

The product is not regulated as a hazardous material. There is however a potential for respiratory tract irritation and an eight-hour exposure limit of 0.05 mg/m³ is recommended.

II. Component Exposure Limits

No information is available.

Engineering Controls

Provide local exhaust ventilation to maintain exposure to < 0.05 mg/m³ over eight hours.

Personal Protective Equipment – Eyes & Face

Safety glasses with side shields or goggles.

Personal Protective Equipment – Skin

Use impervious gloves when handling the product in a manufacturing environment.

Personal Protective Equipment – Respiratory

Wear a nuisance style dust mask for mild dusty conditions or a high efficiency filter if particulate concentrations exceed 0.05 mg/m³.

Personal Protective Equipment – General

Follow normal safety precautions and maintain good housekeeping. Wash thoroughly after handling.

SECTION IX PHYSICAL & CHEMICAL PROPERTIES

Appearance:	White granular powder	**Odor:**	None
Physical State:	**S**olid	**pH:**	5.5 to 6.5 (1% in water)
Vapor Pressure:	**<10 mm Hg**	**Vapor Density:**	N.E.
Boiling Point:	N.A**.**	**Melting Point:**	> 390°F (> 199° C)
Solubility (H_2O):	Not soluble	**Specific Gravity:**	0.4 to 0.7 g/cc
Evaporation Rate:	< 1.0		

SECTION X CHEMICAL STABILITY & REACTIVITY INFORMATION

Chemical Stability

Product is stabile.

Chemical Stability: Conditions to Avoid

None

Incompatibility

None

Hazardous Decomposition

None

Hazardous Polymerization

None

SECTION XI TOXICOLOGICAL INFORMATION

General Product Information

Acute inhalation of respirable dust may cause irritation of upper respiratory tract and lungs.

Acute Toxicity – LD50/LC50

Sodium polyacrylate (CAS 09003-04-7)
LD50: Oral Rat 40 grams/kilogram

Carcinogenicity

None

Component Carcinogenicity

No information is available.

Chronic Toxicity

Chronic exposure to rats for a two-year lifetime using Sodium Polyacrylate that had been micronized to a respirable size (< 10 µm) produced non-specific inflammation and chronic lung injury at 0.2 mg/m³ and 0.8 mg/m³. Also at 0.8 mg/m³, tumors were seen in some test animals. In the absence of chronic inflammation, tumors are not expected. There were no adverse effects detected at 0.05 mg/m³.

Mutagenicity

Sodium polyacrylate had no effect in mutagencity tests.

SECTION XII ECOLOGICAL INFORMATION

Ecotoxicity

General Product Information

Composted polyacrylate absorbents are nontoxic to aquatic or terrestrial organisms at predicted exposure levels from current application rates.

Component Analysis – Ecotoxicity & Aquatic Toxicity

No information available

Environmental Fate

Polyacrylate absorbents are largely inert in aerobic and anaerobic conditions. They are immobile in landfills and soils systems with the mobile fraction showing biodegradability. They are also compatible with incineration of municipal solid waste. Incidental drain disposal of small quantities of polyacrylate absorbents will not affect the performance of wastewater treatment systems.

SECTION XIII DISPOSAL CONSIDERATIONS

US EPA Waste Number & Descriptions

General Product Information

Product is non-hazardous waste material suitable for approved solid waste landfills.

Component Waste Numbers

No EPA Waste Numbers are applicable for this product's components

Disposal Instructions

Dispose of in accordance with Local, State and Federal regulations.

SECTION XIV TRANSPORTATION INFORMATION

International Transportation Regulations

The product is not transport regulated.

SECTION XV REGULATORY INFORMATION

U.S. Federal Regulations

General Product Information

The product is not Federally regulated as a hazardous material.

Clean Air Act

No information available.

Component Analysis

No information available.

Food & Drug Administration

Code of Federal Regulations (CFR) references the following regulated components:

Sodium Polyacrylate (CAS 09003-04-7)

Direct Food Additives:	173.73, 173.310
Indirect Food Additives:	175.105

State Regulations

General Product Information

The product is not regulated by any State as a hazardous material.

Component Analysis - State

None of the components are listed on State lists from CA, FL, MA, MN, NJ or PA.

Component Analysis – WHMIS IDL

None of the components are listed in the WHMIS IDL.

Component Analysis - Inventory

Component	CAS #	TSCA	CAN	EEC
Sodium Polyacrylate	09003-04-7	Yes	DSL	No

SECTION XVI OTHER INFORMATION

Other Information

The information presented in this document is presented in good faith and is believed to be accurate as to the effective date given. However, no warranty, expressed or implied is given. It is the buy's responsibility to ensure that its activities comply with Federal, State or provincial and local laws.

ATTACHMENT 3

Photo Documentation

Photo 1. Site immediately after semi-saturated soil spilled, looking east.

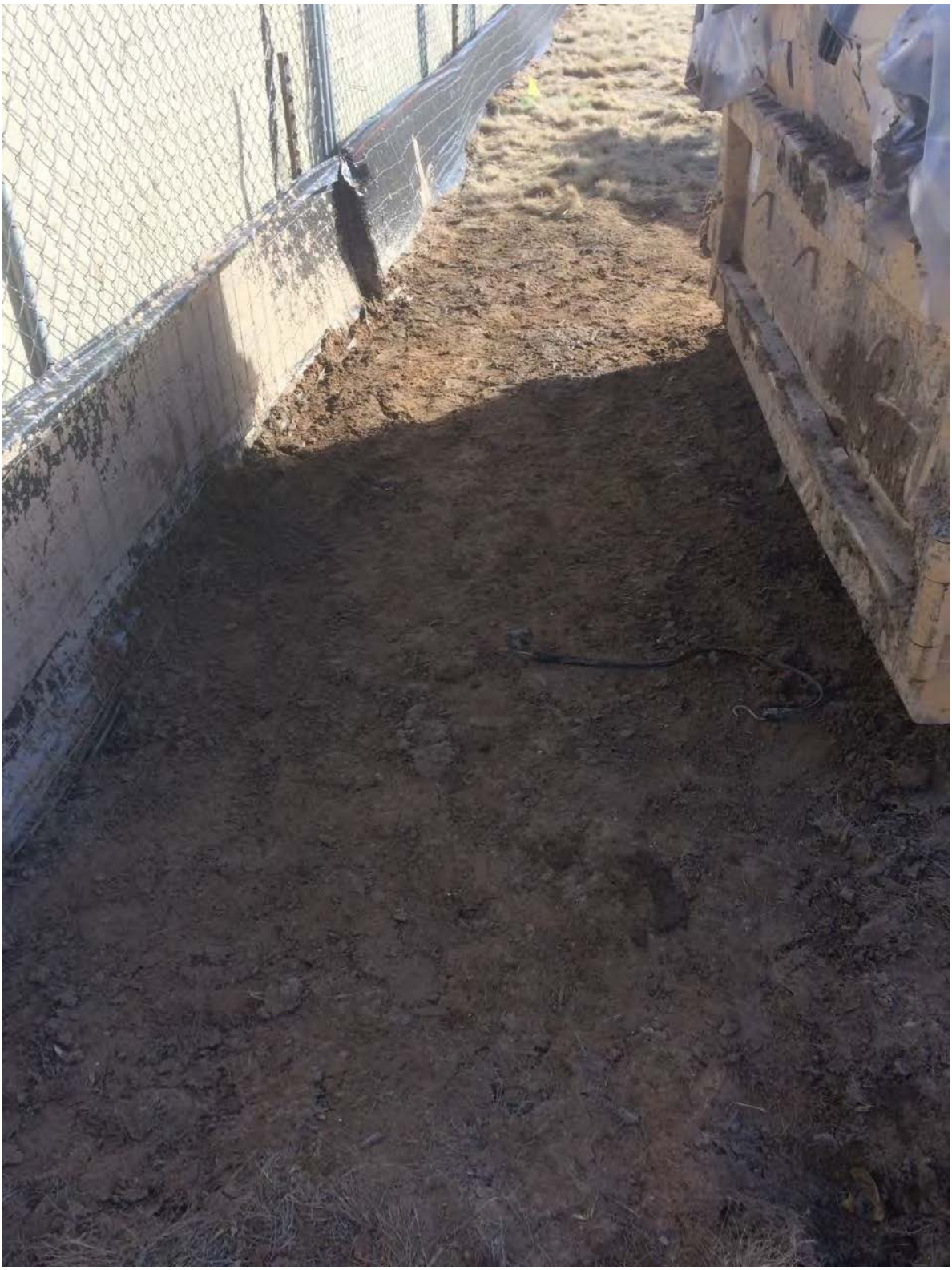

Photo 2. After soil spillage was cleaned up and native soil under spill removed, looking east.

ATTACHMENT 4

Analytical Results Summary Table and Laboratory Analytical Data Package

Attachment 4 - Detected Analytical Results

		Location Name	106MW2-Rolloff				106MW2-Confirm				106MW2-Background			
		Sample ID	1702005-01				1702005-02				1702005-03			
		Sample Date	31-Jan-17				31-Jan-17				31-Jan-17			
		Sample Purpose	Spilled Soil Characterization Sample				Post-Removal Confirmation Sample				Background Ground Sample			
Chemical Class & Analytical Method	**Parameter**	**NMED Residential Soil Screening Level**	**Result**	**Validation Qual.**	**DL**	**LOQ**	**Result**	**Validation Qual.**	**DL**	**LOQ**	**Result**	**Validation Qual.**	**DL**	**LOQ**
SVOCs (mg/Kg), Method SW8270D	Di-n-butylphthalate	**6,160**	0.376	J	0.1	0.401	0.346	J	0.0871	0.348	0.333	J	0.0895	0.358
SVOCs (mg/Kg), Method SW8270D	Bis(2-ethylhexyl)phthalate	**380**	0.186	J	0.1	0.401	0.127	J	0.0871	0.348	0.685		0.0895	0.358
SVOCs (mg/Kg), Method SW8270D	Benzo(b)fluoranthene	**1.53**	ND	U	0.1	0.401	0.0895	J	0.0871	0.348	0.116	J	0.0895	0.358
SVOCs (mg/Kg), Method SW8270D	Flouranthene	**2,320**	ND	U	0.1	0.401	0.157	J	0.0871	0.348	0.175	J	0.0895	0.358
SVOCs (mg/Kg), Method SW8270D	Phenanthrene	**1,740**	ND	U	0.1	0.401	0.122	J	0.0871	0.348	0.125	J	0.0895	0.358
SVOCs (mg/Kg), Method SW8270D	Pyrene	**1,740**	ND	U	0.1	0.401	0.15	J	0.0871	0.348	0.176	J	0.0895	0.358
SVOCs (mg/Kg), Method SW8270D	Chrysene	**153**	ND	U	0.1	0.401	ND	U	0.0871	0.348	0.104	J	0.0895	0.358
Metals (mg/kg), Method SW6010C	Iron	**54,800**	6,120		6.64	22.1	7,590		4.86	16.2	7,680		5.4	18
Metals (mg/kg), Method SW6010C	Lead	**400**	2.29		0.332	1.11	13.5		0.243	0.811	16.5		0.27	0.9
Metals (mg/kg), Method SW6010C	Manganese	**10,500**	109		0.664	3.32	117		0.486	2.43	125		0.54	2.7

DL - detection limit
ID - Identification
J - Estimated value, concentration is less than the LOQ but greater than the DL
LOQ - limit of quantitation
mg/kg - milligrams per kilogram
ND - not detected
NMED - New Mexico Environment Department
SVOCs - Semi-volatile organic compounds
U - Analyte was not detected at a value exceeding the DL

Empirical Laboratories, LLC

621 Mainstream Drive, Suite 270
Nashville, TN 37228
615.345.1115 Phone
866.417.0548 Fax

08 February 2017

Susan Huang
CB&I
4005 Port Chicago Highway
Concord, CA 94520

RE: Kirtland Rapid Response (Laboratory WorkOrder # 1702005)

Enclosed are the results of analyses for samples received by the laboratory on 02/01/2017 09:30. If you have any questions concerning this report, please feel free to contact me.

Sincerely,

Data Qualifiers

As applicable and where required, the following general qualifiers are associated with the sample results. Additional qualifiers will be specified within the reporting sections of the data package or within the body of the Case Narrative.

Analytical Report Terms and Qualifiers

DL: The detection limit (DL) is defined as the minimum concentration of a substance that can be measured and reported with 99% confidence that the analyte concentration is greater than zero. The DL is supported by the method detection limit (MDL) which is determined from analysis of a sample containing the analyte in a given matrix.

LOD: The Limit of Detection is an estimate of the minimum amount of a substance that an analytical process can reliably detect. An LOD is analyte- and matrix-specific and may be laboratory-dependent. This definition is further clarified in the DoD QSM as the smallest amount or concentration of a substance that must be present in a sample in order to be detected at a high level of confidence (99%). At the LOD, the false negative rate (Type II error) is 1%.

LOQ: The Limit of Quantitation is the minimum level, concentration, or quantity of a target variable (e.g., target analyte) that can be reported with a specified degree of confidence. This term is further clarified within the DoD QSM as the lowest concentration that produces a quantitative result within specified limits of precision and bias.

***:** Exceeding quality control criteria are associated with the reported result.

B: The presence of a "B" to the right of an analytical value indicates that this compound was also detected in the method blank and the data should be interpreted with caution. One should consider the possibility that the correct sample result might be less than the reported result and, perhaps, zero.

D: When a sample (or sample extract) is rerun diluted because one of the compound concentrations exceeded the highest concentration range for the standard curve, all of the values obtained in the dilution run will be flagged with a "D".

E: The concentration for any compound found which exceeds the highest concentration level on the standard curve for that compound will be flagged with an "E". Usually the sample will be rerun at a dilution to quantitate the flagged compound. For Metals, the qualifier indicates that the serial dilution was outside of the control limits and the compound should be considered estimated due to the presence of interference.

H1: The result was analyzed outside of the EPA recommended holding time.

H2: The result was extracted outside of the EPA recommended holding time

H3: The sample for this analyte was received outside of the EPA recommended holding time.

J: The presence of a "J" to the right of an analytical result indicates that the reported result is estimated. The mass spectral data pass the identification criteria showing that the compound is present, but the calculated result is less than the LOQ. One should feel confident that the result is greater than zero and less than the LOQ.

M: Indicates that the sample matrix interfered with the quantitation of the analyte. In dual column analysis the result is reported from the column with the lower concentration. In inorganics, it indicates that the parameters DL/LOD/LOQ have been raised.

N: The MS/MSD accuracy and/or precision are outside criteria. The predigested spike recovery is not within control limits for the associated parameter.

P: The associated numerical value is an estimated quantity. There is greater than a 40% difference between the two GC columns for the detected concentrations. The higher of the two values is reported unless matrix interference is obvious or for HPLC analysis where the primary column is reported.

Q: The relative percent difference (RPD) and/or percent recovery exceeded limits in the associated Blank Spike and/or Blank Spike Duplicate.

S: The associated internal standard exceeded criteria.

U: The presence of a "U" indicates that the analyte was analyzed for but was not detected or the concentration of the analyte quantitated below the DL.

X: The parameter shows a potential positive bias on a reported concentration due to an ICV or CCV exceeding the upper control limit on the high side.

Y: The parameter shows a potential negative bias on a reported concentration due to an ICV or CCV exceeding the lower control limit on the low side.

Z: The parameter shows lack of confirmation/detection, which may be due to a negative bias in the ICV or CCV which exceeds the lower control limit.

Laboratory Analytical Results Report

Client Sample ID: 106MW2-Rolloff **Sample Collection Date/Time: 01/31/2017 14:45**

Lab Sample ID: 1702005-01 **Sample Received Date/Time: 02/01/2017 09:30**

Sample Matrix: Solid

Analyte	Result	DL	LOD	LOQ	Units	Dilution	Analyzed	Method	Batch	Notes
Classical Chemistry Parameters										
% Solids	**82**	1.0	1.0	1.0	%	1	02/05/17 12:35	SM2540B	7B03416	
Volatile Organic Compounds by GC/MS										
Acetone	ND	6.33	12.7	25.3	ug/Kg dry	1	02/07/17 09:17	SW8260B	7B07001	U
Benzene	ND	1.58	3.16	6.33	ug/Kg dry	1	02/07/17 09:17	SW8260B	7B07001	U
Bromobenzene	ND	1.58	3.16	6.33	ug/Kg dry	1	02/07/17 09:17	SW8260B	7B07001	U
Bromochloromethane	ND	1.58	3.16	6.33	ug/Kg dry	1	02/07/17 09:17	SW8260B	7B07001	U
Bromodichloromethane	ND	1.58	3.16	6.33	ug/Kg dry	1	02/07/17 09:17	SW8260B	7B07001	U
Bromoform	ND	1.58	3.16	6.33	ug/Kg dry	1	02/07/17 09:17	SW8260B	7B07001	U
Bromomethane	ND	3.16	6.33	12.7	ug/Kg dry	1	02/07/17 09:17	SW8260B	7B07001	U
2-Butanone	ND	3.16	6.33	12.7	ug/Kg dry	1	02/07/17 09:17	SW8260B	7B07001	U
n-Butylbenzene	ND	1.58	3.16	6.33	ug/Kg dry	1	02/07/17 09:17	SW8260B	7B07001	U
sec-Butylbenzene	ND	1.58	3.16	6.33	ug/Kg dry	1	02/07/17 09:17	SW8260B	7B07001	U
tert-Butylbenzene	ND	1.58	3.16	6.33	ug/Kg dry	1	02/07/17 09:17	SW8260B	7B07001	U
Carbon disulfide	ND	1.58	3.16	6.33	ug/Kg dry	1	02/07/17 09:17	SW8260B	7B07001	U
Carbon tetrachloride	ND	1.58	3.16	6.33	ug/Kg dry	1	02/07/17 09:17	SW8260B	7B07001	U
Chlorobenzene	ND	1.58	3.16	6.33	ug/Kg dry	1	02/07/17 09:17	SW8260B	7B07001	U
Chloroethane	ND	3.16	6.33	12.7	ug/Kg dry	1	02/07/17 09:17	SW8260B	7B07001	U
Chloroform	ND	1.58	3.16	6.33	ug/Kg dry	1	02/07/17 09:17	SW8260B	7B07001	U
Chloromethane	ND	3.16	6.33	12.7	ug/Kg dry	1	02/07/17 09:17	SW8260B	7B07001	U
2-Chlorotoluene	ND	1.58	3.16	6.33	ug/Kg dry	1	02/07/17 09:17	SW8260B	7B07001	U
4-Chlorotoluene	ND	1.58	3.16	6.33	ug/Kg dry	1	02/07/17 09:17	SW8260B	7B07001	U
Cyclohexane	ND	1.58	3.16	6.33	ug/Kg dry	1	02/07/17 09:17	SW8260B	7B07001	U
1,2-Dibromo-3-chloropropane	ND	3.16	6.33	12.7	ug/Kg dry	1	02/07/17 09:17	SW8260B	7B07001	U
Dibromochloromethane	ND	1.58	3.16	6.33	ug/Kg dry	1	02/07/17 09:17	SW8260B	7B07001	U
1,2-Dibromoethane (EDB)	ND	1.58	3.16	6.33	ug/Kg dry	1	02/07/17 09:17	SW8260B	7B07001	U
Dibromomethane	ND	1.58	3.16	6.33	ug/Kg dry	1	02/07/17 09:17	SW8260B	7B07001	U
1,2-Dichlorobenzene	ND	1.58	3.16	6.33	ug/Kg dry	1	02/07/17 09:17	SW8260B	7B07001	U
1,4-Dichlorobenzene	ND	1.58	3.16	6.33	ug/Kg dry	1	02/07/17 09:17	SW8260B	7B07001	U
1,3-Dichlorobenzene	ND	1.58	3.16	6.33	ug/Kg dry	1	02/07/17 09:17	SW8260B	7B07001	U
Dichlorodifluoromethane	ND	3.16	6.33	12.7	ug/Kg dry	1	02/07/17 09:17	SW8260B	7B07001	U
1,1-Dichloroethane	ND	1.58	3.16	6.33	ug/Kg dry	1	02/07/17 09:17	SW8260B	7B07001	U
1,2-Dichloroethane	ND	1.58	3.16	6.33	ug/Kg dry	1	02/07/17 09:17	SW8260B	7B07001	U
1,1-Dichloroethene	ND	1.58	3.16	6.33	ug/Kg dry	1	02/07/17 09:17	SW8260B	7B07001	U
cis-1,2-Dichloroethene	ND	1.58	3.16	6.33	ug/Kg dry	1	02/07/17 09:17	SW8260B	7B07001	U
trans-1,2-Dichloroethene	ND	1.58	3.16	6.33	ug/Kg dry	1	02/07/17 09:17	SW8260B	7B07001	U
1,2-Dichloropropane	ND	1.58	3.16	6.33	ug/Kg dry	1	02/07/17 09:17	SW8260B	7B07001	U
1,3-Dichloropropane	ND	1.58	3.16	6.33	ug/Kg dry	1	02/07/17 09:17	SW8260B	7B07001	U
2,2-Dichloropropane	ND	1.58	3.16	6.33	ug/Kg dry	1	02/07/17 09:17	SW8260B	7B07001	U
1,1-Dichloropropene	ND	1.58	3.16	6.33	ug/Kg dry	1	02/07/17 09:17	SW8260B	7B07001	U
cis-1,3-Dichloropropene	ND	1.58	3.16	6.33	ug/Kg dry	1	02/07/17 09:17	SW8260B	7B07001	U
trans-1,3-Dichloropropene	ND	1.58	3.16	6.33	ug/Kg dry	1	02/07/17 09:17	SW8260B	7B07001	U
Ethylbenzene	ND	1.58	3.16	6.33	ug/Kg dry	1	02/07/17 09:17	SW8260B	7B07001	U

Laboratory Analytical Results Report

Client Sample ID: 106MW2-Rolloff | **Sample Collection Date/Time: 01/31/2017 14:45**

Lab Sample ID: 1702005-01 | **Sample Received Date/Time: 02/01/2017 09:30**

Sample Matrix: Solid

Analyte	Result	DL	LOD	LOQ	Units	Dilution	Analyzed	Method	Batch	Notes
Volatile Organic Compounds by GC/MS										
Hexachlorobutadiene	ND	1.58	3.16	6.33	ug/Kg dry	1	02/07/17 09:17	SW8260B	7B07001	U
2-Hexanone	ND	3.16	6.33	12.7	ug/Kg dry	1	02/07/17 09:17	SW8260B	7B07001	U
Isopropylbenzene	ND	1.58	3.16	6.33	ug/Kg dry	1	02/07/17 09:17	SW8260B	7B07001	U
p-Isopropyltoluene	ND	1.58	3.16	6.33	ug/Kg dry	1	02/07/17 09:17	SW8260B	7B07001	U
Methyl Acetate	ND	3.16	6.33	12.7	ug/Kg dry	1	02/07/17 09:17	SW8260B	7B07001	U
Methylcyclohexane	ND	1.58	3.16	6.33	ug/Kg dry	1	02/07/17 09:17	SW8260B	7B07001	U
Methylene chloride	ND	3.16	6.33	12.7	ug/Kg dry	1	02/07/17 09:17	SW8260B	7B07001	U
4-Methyl-2-pentanone	ND	3.16	6.33	12.7	ug/Kg dry	1	02/07/17 09:17	SW8260B	7B07001	U
Methyl t-Butyl Ether	ND	1.58	3.16	6.33	ug/Kg dry	1	02/07/17 09:17	SW8260B	7B07001	U
Naphthalene	ND	1.58	3.16	6.33	ug/Kg dry	1	02/07/17 09:17	SW8260B	7B07001	U
n-Propylbenzene	ND	1.58	3.16	6.33	ug/Kg dry	1	02/07/17 09:17	SW8260B	7B07001	U
Styrene	ND	1.58	3.16	6.33	ug/Kg dry	1	02/07/17 09:17	SW8260B	7B07001	U
1,1,2,2-Tetrachloroethane	ND	1.58	3.16	6.33	ug/Kg dry	1	02/07/17 09:17	SW8260B	7B07001	U
Tetrachloroethene	ND	1.58	3.16	6.33	ug/Kg dry	1	02/07/17 09:17	SW8260B	7B07001	U
Toluene	ND	1.58	3.16	6.33	ug/Kg dry	1	02/07/17 09:17	SW8260B	7B07001	U
1,2,3-Trichlorobenzene	ND	1.58	3.16	6.33	ug/Kg dry	1	02/07/17 09:17	SW8260B	7B07001	U
1,2,4-Trichlorobenzene	ND	1.58	3.16	6.33	ug/Kg dry	1	02/07/17 09:17	SW8260B	7B07001	U
1,3,5-Trichlorobenzene	ND	1.58	3.16	6.33	ug/Kg dry	1	02/07/17 09:17	SW8260B	7B07001	U
1,1,1-Trichloroethane	ND	1.58	3.16	6.33	ug/Kg dry	1	02/07/17 09:17	SW8260B	7B07001	U
1,1,2-Trichloroethane	ND	1.58	3.16	6.33	ug/Kg dry	1	02/07/17 09:17	SW8260B	7B07001	U
Trichloroethene	ND	1.58	3.16	6.33	ug/Kg dry	1	02/07/17 09:17	SW8260B	7B07001	U
Trichlorofluoromethane	ND	3.16	6.33	12.7	ug/Kg dry	1	02/07/17 09:17	SW8260B	7B07001	U
1,1,2-Trichloro-1,2,2-trifluoroethane	ND	3.16	6.33	12.7	ug/Kg dry	1	02/07/17 09:17	SW8260B	7B07001	U
Vinyl chloride	ND	1.58	3.16	6.33	ug/Kg dry	1	02/07/17 09:17	SW8260B	7B07001	U
m,p-Xylene	ND	3.16	6.33	12.7	ug/Kg dry	1	02/07/17 09:17	SW8260B	7B07001	U
o-Xylene	ND	1.58	3.16	6.33	ug/Kg dry	1	02/07/17 09:17	SW8260B	7B07001	U
Xylenes (total)	ND	4.75	9.49	19.0	ug/Kg dry	1	02/07/17 09:17	SW8260B	7B07001	U
Surrogate: Bromofluorobenzene				*98.5 %*	*79-119*		*02/07/17 09:17*	*SW8260B*	*7B07001*	
Surrogate: Dibromofluoromethane				*94.5 %*	*78-119*		*02/07/17 09:17*	*SW8260B*	*7B07001*	
Surrogate: 1.2-Dichloroethane-d4				*93.6 %*	*71-136*		*02/07/17 09:17*	*SW8260B*	*7B07001*	
Surrogate: Toluene-d8				*101 %*	*85-116*		*02/07/17 09:17*	*SW8260B*	*7B07001*	

Laboratory Analytical Results Report

Client Sample ID: 106MW2-Rolloff **Sample Collection Date/Time: 01/31/2017 14:45**

Lab Sample ID: 1702005-01 **Sample Received Date/Time: 02/01/2017 09:30**

Sample Matrix: Solid

Analyte	Result	DL	LOD	LOQ	Units	Dilution	Analyzed	Method	Batch	Notes
Semivolatile Organic Compounds by GC/MS										
Acenaphthene	ND	100	201	401	ug/Kg dry	1	02/07/17 18:23	SW8270D	7B06012	U
Acenaphthylene	ND	100	201	401	ug/Kg dry	1	02/07/17 18:23	SW8270D	7B06012	U
Acetophenone	ND	100	201	401	ug/Kg dry	1	02/07/17 18:23	SW8270D	7B06012	U
Aniline	ND	100	201	401	ug/Kg dry	1	02/07/17 18:23	SW8270D	7B06012	U
Anthracene	ND	100	201	401	ug/Kg dry	1	02/07/17 18:23	SW8270D	7B06012	U
Atrazine	ND	100	201	401	ug/Kg dry	1	02/07/17 18:23	SW8270D	7B06012	U
Benzaldehyde	ND	100	201	401	ug/Kg dry	1	02/07/17 18:23	SW8270D	7B06012	U
Benzidine	ND	100	2010	4010	ug/Kg dry	1	02/07/17 18:23	SW8270D	7B06012	U
Benzo(a)anthracene	ND	100	201	401	ug/Kg dry	1	02/07/17 18:23	SW8270D	7B06012	U
Benzo(a)pyrene	ND	100	201	401	ug/Kg dry	1	02/07/17 18:23	SW8270D	7B06012	U
Benzo(b)fluoranthene	ND	100	201	401	ug/Kg dry	1	02/07/17 18:23	SW8270D	7B06012	U
Benzo(g,h,i)perylene	ND	100	201	401	ug/Kg dry	1	02/07/17 18:23	SW8270D	7B06012	U
Benzoic acid	ND	100	803	1600	ug/Kg dry	1	02/07/17 18:23	SW8270D	7B06012	QNU
Benzo(k)fluoranthene	ND	100	201	401	ug/Kg dry	1	02/07/17 18:23	SW8270D	7B06012	U
Benzyl alcohol	ND	100	201	401	ug/Kg dry	1	02/07/17 18:23	SW8270D	7B06012	U
1,1-Biphenyl	ND	100	201	401	ug/Kg dry	1	02/07/17 18:23	SW8270D	7B06012	U
4-Bromophenyl-phenylether	ND	100	201	401	ug/Kg dry	1	02/07/17 18:23	SW8270D	7B06012	U
Butylbenzylphthalate	ND	100	201	401	ug/Kg dry	1	02/07/17 18:23	SW8270D	7B06012	U
Caprolactam	ND	100	201	401	ug/Kg dry	1	02/07/17 18:23	SW8270D	7B06012	U
Carbazole	ND	100	201	401	ug/Kg dry	1	02/07/17 18:23	SW8270D	7B06012	NU
4-Chloro-3-methylphenol	ND	100	201	401	ug/Kg dry	1	02/07/17 18:23	SW8270D	7B06012	U
4-Chloroaniline	ND	100	201	401	ug/Kg dry	1	02/07/17 18:23	SW8270D	7B06012	NU
Bis(2-chloroethoxy)methane	ND	100	201	401	ug/Kg dry	1	02/07/17 18:23	SW8270D	7B06012	U
Bis(2-chloroethyl)ether	ND	100	201	401	ug/Kg dry	1	02/07/17 18:23	SW8270D	7B06012	U
2,2'-Oxybis-1-chloropropane	ND	100	201	401	ug/Kg dry	1	02/07/17 18:23	SW8270D	7B06012	U
2-Chloronaphthalene	ND	100	201	401	ug/Kg dry	1	02/07/17 18:23	SW8270D	7B06012	U
2-Chlorophenol	ND	100	201	401	ug/Kg dry	1	02/07/17 18:23	SW8270D	7B06012	U
4-Chlorophenyl phenyl ether	ND	100	201	401	ug/Kg dry	1	02/07/17 18:23	SW8270D	7B06012	U
Chrysene	ND	100	201	401	ug/Kg dry	1	02/07/17 18:23	SW8270D	7B06012	U
Dibenz(a,h)anthracene	ND	100	201	401	ug/Kg dry	1	02/07/17 18:23	SW8270D	7B06012	U
Dibenzofuran	ND	100	201	401	ug/Kg dry	1	02/07/17 18:23	SW8270D	7B06012	U
Di-n-butylphthalate	**376**	100	201	401	ug/Kg dry	1	02/07/17 18:23	SW8270D	7B06012	JB
1,4-Dichlorobenzene	ND	100	201	401	ug/Kg dry	1	02/07/17 18:23	SW8270D	7B06012	U
1,3-Dichlorobenzene	ND	100	201	401	ug/Kg dry	1	02/07/17 18:23	SW8270D	7B06012	U
1,2-Dichlorobenzene	ND	100	201	401	ug/Kg dry	1	02/07/17 18:23	SW8270D	7B06012	U
3,3'-Dichlorobenzidine	ND	100	201	401	ug/Kg dry	1	02/07/17 18:23	SW8270D	7B06012	U
2,6-Dichlorophenol	ND	100	201	401	ug/Kg dry	1	02/07/17 18:23	SW8270D	7B06012	U
2,4-Dichlorophenol	ND	100	201	401	ug/Kg dry	1	02/07/17 18:23	SW8270D	7B06012	U
Diethylphthalate	ND	100	201	401	ug/Kg dry	1	02/07/17 18:23	SW8270D	7B06012	U
2,4-Dimethylphenol	ND	401	803	1600	ug/Kg dry	1	02/07/17 18:23	SW8270D	7B06012	U
Dimethyl phthalate	ND	100	201	401	ug/Kg dry	1	02/07/17 18:23	SW8270D	7B06012	U
4,6-Dinitro-2-methylphenol	ND	1000	2010	4010	ug/Kg dry	1	02/07/17 18:23	SW8270D	7B06012	U
2,4-Dinitrophenol	ND	1000	2010	4010	ug/Kg dry	1	02/07/17 18:23	SW8270D	7B06012	NU

Laboratory Analytical Results Report

Client Sample ID: 106MW2-Rolloff **Sample Collection Date/Time: 01/31/2017 14:45**

Lab Sample ID: 1702005-01 **Sample Received Date/Time: 02/01/2017 09:30**

Sample Matrix: Solid

Analyte	Result	DL	LOD	LOQ	Units	Dilution	Analyzed	Method	Batch	Notes
Semivolatile Organic Compounds by GC/MS										
2,4-Dinitrotoluene	ND	100	201	401	ug/Kg dry	1	02/07/17 18:23	SW8270D	7B06012	U
2,6-Dinitrotoluene	ND	100	201	401	ug/Kg dry	1	02/07/17 18:23	SW8270D	7B06012	U
Di-n-octylphthalate	ND	100	201	401	ug/Kg dry	1	02/07/17 18:23	SW8270D	7B06012	U
1,4-Dioxane	ND	100	201	401	ug/Kg dry	1	02/07/17 18:23	SW8270D	7B06012	U
1,2-Diphenylhydrazine (as Azobenzene)	ND	100	201	401	ug/Kg dry	1	02/07/17 18:23	SW8270D	7B06012	U
Bis(2-ethylhexyl)phthalate	**186**	100	201	401	ug/Kg dry	1	02/07/17 18:23	SW8270D	7B06012	J
Fluoranthene	ND	100	201	401	ug/Kg dry	1	02/07/17 18:23	SW8270D	7B06012	U
Fluorene	ND	100	201	401	ug/Kg dry	1	02/07/17 18:23	SW8270D	7B06012	U
Hexachlorobenzene	ND	100	201	401	ug/Kg dry	1	02/07/17 18:23	SW8270D	7B06012	U
Hexachlorobutadiene	ND	100	201	401	ug/Kg dry	1	02/07/17 18:23	SW8270D	7B06012	U
Hexachlorocyclopentadiene	ND	100	201	401	ug/Kg dry	1	02/07/17 18:23	SW8270D	7B06012	U
Hexachloroethane	ND	100	201	401	ug/Kg dry	1	02/07/17 18:23	SW8270D	7B06012	U
Indeno(1,2,3-cd)pyrene	ND	100	201	401	ug/Kg dry	1	02/07/17 18:23	SW8270D	7B06012	U
Isophorone	ND	100	201	401	ug/Kg dry	1	02/07/17 18:23	SW8270D	7B06012	U
1-Methylnaphthalene	ND	100	201	401	ug/Kg dry	1	02/07/17 18:23	SW8270D	7B06012	U
2-Methylnaphthalene	ND	100	201	401	ug/Kg dry	1	02/07/17 18:23	SW8270D	7B06012	U
2-Methylphenol	ND	100	201	401	ug/Kg dry	1	02/07/17 18:23	SW8270D	7B06012	U
3-Methylphenol/4-Methylphenol	ND	100	201	401	ug/Kg dry	1	02/07/17 18:23	SW8270D	7B06012	U
3-Methylphenol	ND	100	201	401	ug/Kg dry	1	02/07/17 18:23	SW8270D	7B06012	U
4-Methylphenol	ND	100	201	401	ug/Kg dry	1	02/07/17 18:23	SW8270D	7B06012	U
Naphthalene	ND	100	201	401	ug/Kg dry	1	02/07/17 18:23	SW8270D	7B06012	U
4-Nitroaniline	ND	401	803	1600	ug/Kg dry	1	02/07/17 18:23	SW8270D	7B06012	NU
3-Nitroaniline	ND	401	803	1600	ug/Kg dry	1	02/07/17 18:23	SW8270D	7B06012	NU
2-Nitroaniline	ND	401	803	1600	ug/Kg dry	1	02/07/17 18:23	SW8270D	7B06012	U
Nitrobenzene	ND	100	201	401	ug/Kg dry	1	02/07/17 18:23	SW8270D	7B06012	U
4-Nitrophenol	ND	401	803	1600	ug/Kg dry	1	02/07/17 18:23	SW8270D	7B06012	U
2-Nitrophenol	ND	100	201	401	ug/Kg dry	1	02/07/17 18:23	SW8270D	7B06012	U
N-Nitrosodimethylamine	ND	100	201	401	ug/Kg dry	1	02/07/17 18:23	SW8270D	7B06012	U
N-Nitrosodiphenylamine	ND	100	201	401	ug/Kg dry	1	02/07/17 18:23	SW8270D	7B06012	U
N-Nitroso-di-n-propylamine	ND	100	201	401	ug/Kg dry	1	02/07/17 18:23	SW8270D	7B06012	U
Pentachlorophenol	ND	401	803	1600	ug/Kg dry	1	02/07/17 18:23	SW8270D	7B06012	U
Phenanthrene	ND	100	201	401	ug/Kg dry	1	02/07/17 18:23	SW8270D	7B06012	U
Phenol	ND	100	201	401	ug/Kg dry	1	02/07/17 18:23	SW8270D	7B06012	U
Pyrene	ND	100	201	401	ug/Kg dry	1	02/07/17 18:23	SW8270D	7B06012	U
1,2,4,5-Tetrachlorobenzene	ND	100	201	401	ug/Kg dry	1	02/07/17 18:23	SW8270D	7B06012	U
2,3,4,6-Tetrachlorophenol	ND	100	201	401	ug/Kg dry	1	02/07/17 18:23	SW8270D	7B06012	U
1,2,4-Trichlorobenzene	ND	100	201	401	ug/Kg dry	1	02/07/17 18:23	SW8270D	7B06012	U
2,4,6-Trichlorophenol	ND	100	201	401	ug/Kg dry	1	02/07/17 18:23	SW8270D	7B06012	U
2,4,5-Trichlorophenol	ND	100	201	401	ug/Kg dry	1	02/07/17 18:23	SW8270D	7B06012	U
Surrogate: 2-Fluorobiphenyl				*76.5 %*	*44-114*		*02/07/17 18:23*	*SW8270D*	*7B06012*	
Surrogate: 2-Fluorophenol				*71.1 %*	*35-115*		*02/07/17 18:23*	*SW8270D*	*7B06012*	
Surrogate: Nitrobenzene-d5				*55.3 %*	*37-122*		*02/07/17 18:23*	*SW8270D*	*7B06012*	

Laboratory Analytical Results Report

Client Sample ID: 106MW2-Rolloff

Lab Sample ID: 1702005-01

Sample Matrix: Solid

Sample Collection Date/Time: 01/31/2017 14:45

Sample Received Date/Time: 02/01/2017 09:30

Analyte	Result	DL	LOD	LOQ	Units	Dilution	Analyzed	Method	Batch	Notes
Semivolatile Organic Compounds by GC/MS										
Surrogate: Phenol-d6				*67.7 %*	*33-122*		*02/07/17 18:23*	*SW8270D*	*7B06012*	
Surrogate: Terphenyl-d14				*79.3 %*	*54-127*		*02/07/17 18:23*	*SW8270D*	*7B06012*	
Surrogate: 2,4,6-Tribromophenol				*65.2 %*	*39-132*		*02/07/17 18:23*	*SW8270D*	*7B06012*	

Laboratory Analytical Results Report

Client Sample ID: 106MW2-Confirm **Sample Collection Date/Time: 01/31/2017 14:35**

Lab Sample ID: 1702005-02 **Sample Received Date/Time: 02/01/2017 09:30**

Sample Matrix: Solid

Analyte	Result	DL	LOD	LOQ	Units	Dilution	Analyzed	Method	Batch	Notes
Classical Chemistry Parameters										
% Solids	**95**	1.0	1.0	1.0	%	1	02/05/17 12:35	SM2540B	7B03416	
Volatile Organic Compounds by GC/MS										
Acetone	ND	4.41	8.81	17.6	ug/Kg dry	1	02/07/17 09:43	SW8260B	7B07001	U
Benzene	ND	1.10	2.20	4.41	ug/Kg dry	1	02/07/17 09:43	SW8260B	7B07001	U
Bromobenzene	ND	1.10	2.20	4.41	ug/Kg dry	1	02/07/17 09:43	SW8260B	7B07001	U
Bromochloromethane	ND	1.10	2.20	4.41	ug/Kg dry	1	02/07/17 09:43	SW8260B	7B07001	U
Bromodichloromethane	ND	1.10	2.20	4.41	ug/Kg dry	1	02/07/17 09:43	SW8260B	7B07001	U
Bromoform	ND	1.10	2.20	4.41	ug/Kg dry	1	02/07/17 09:43	SW8260B	7B07001	U
Bromomethane	ND	2.20	4.41	8.81	ug/Kg dry	1	02/07/17 09:43	SW8260B	7B07001	U
2-Butanone	ND	2.20	4.41	8.81	ug/Kg dry	1	02/07/17 09:43	SW8260B	7B07001	U
n-Butylbenzene	ND	1.10	2.20	4.41	ug/Kg dry	1	02/07/17 09:43	SW8260B	7B07001	U
sec-Butylbenzene	ND	1.10	2.20	4.41	ug/Kg dry	1	02/07/17 09:43	SW8260B	7B07001	U
tert-Butylbenzene	ND	1.10	2.20	4.41	ug/Kg dry	1	02/07/17 09:43	SW8260B	7B07001	U
Carbon disulfide	ND	1.10	2.20	4.41	ug/Kg dry	1	02/07/17 09:43	SW8260B	7B07001	U
Carbon tetrachloride	ND	1.10	2.20	4.41	ug/Kg dry	1	02/07/17 09:43	SW8260B	7B07001	U
Chlorobenzene	ND	1.10	2.20	4.41	ug/Kg dry	1	02/07/17 09:43	SW8260B	7B07001	U
Chloroethane	ND	2.20	4.41	8.81	ug/Kg dry	1	02/07/17 09:43	SW8260B	7B07001	U
Chloroform	ND	1.10	2.20	4.41	ug/Kg dry	1	02/07/17 09:43	SW8260B	7B07001	U
Chloromethane	ND	2.20	4.41	8.81	ug/Kg dry	1	02/07/17 09:43	SW8260B	7B07001	U
2-Chlorotoluene	ND	1.10	2.20	4.41	ug/Kg dry	1	02/07/17 09:43	SW8260B	7B07001	U
4-Chlorotoluene	ND	1.10	2.20	4.41	ug/Kg dry	1	02/07/17 09:43	SW8260B	7B07001	U
Cyclohexane	ND	1.10	2.20	4.41	ug/Kg dry	1	02/07/17 09:43	SW8260B	7B07001	U
1,2-Dibromo-3-chloropropane	ND	2.20	4.41	8.81	ug/Kg dry	1	02/07/17 09:43	SW8260B	7B07001	U
Dibromochloromethane	ND	1.10	2.20	4.41	ug/Kg dry	1	02/07/17 09:43	SW8260B	7B07001	U
1,2-Dibromoethane (EDB)	ND	1.10	2.20	4.41	ug/Kg dry	1	02/07/17 09:43	SW8260B	7B07001	U
Dibromomethane	ND	1.10	2.20	4.41	ug/Kg dry	1	02/07/17 09:43	SW8260B	7B07001	U
1,2-Dichlorobenzene	ND	1.10	2.20	4.41	ug/Kg dry	1	02/07/17 09:43	SW8260B	7B07001	U
1,4-Dichlorobenzene	ND	1.10	2.20	4.41	ug/Kg dry	1	02/07/17 09:43	SW8260B	7B07001	U
1,3-Dichlorobenzene	ND	1.10	2.20	4.41	ug/Kg dry	1	02/07/17 09:43	SW8260B	7B07001	U
Dichlorodifluoromethane	ND	2.20	4.41	8.81	ug/Kg dry	1	02/07/17 09:43	SW8260B	7B07001	U
1,1-Dichloroethane	ND	1.10	2.20	4.41	ug/Kg dry	1	02/07/17 09:43	SW8260B	7B07001	U
1,2-Dichloroethane	ND	1.10	2.20	4.41	ug/Kg dry	1	02/07/17 09:43	SW8260B	7B07001	U
1,1-Dichloroethene	ND	1.10	2.20	4.41	ug/Kg dry	1	02/07/17 09:43	SW8260B	7B07001	U
cis-1,2-Dichloroethene	ND	1.10	2.20	4.41	ug/Kg dry	1	02/07/17 09:43	SW8260B	7B07001	U
trans-1,2-Dichloroethene	ND	1.10	2.20	4.41	ug/Kg dry	1	02/07/17 09:43	SW8260B	7B07001	U
1,2-Dichloropropane	ND	1.10	2.20	4.41	ug/Kg dry	1	02/07/17 09:43	SW8260B	7B07001	U
1,3-Dichloropropane	ND	1.10	2.20	4.41	ug/Kg dry	1	02/07/17 09:43	SW8260B	7B07001	U
2,2-Dichloropropane	ND	1.10	2.20	4.41	ug/Kg dry	1	02/07/17 09:43	SW8260B	7B07001	U
1,1-Dichloropropene	ND	1.10	2.20	4.41	ug/Kg dry	1	02/07/17 09:43	SW8260B	7B07001	U
cis-1,3-Dichloropropene	ND	1.10	2.20	4.41	ug/Kg dry	1	02/07/17 09:43	SW8260B	7B07001	U
trans-1,3-Dichloropropene	ND	1.10	2.20	4.41	ug/Kg dry	1	02/07/17 09:43	SW8260B	7B07001	U
Ethylbenzene	ND	1.10	2.20	4.41	ug/Kg dry	1	02/07/17 09:43	SW8260B	7B07001	U
Hexachlorobutadiene	ND	1.10	2.20	4.41	ug/Kg dry	1	02/07/17 09:43	SW8260B	7B07001	U

Laboratory Analytical Results Report

Client Sample ID: 106MW2-Confirm **Sample Collection Date/Time: 01/31/2017 14:35**

Lab Sample ID: 1702005-02 **Sample Received Date/Time: 02/01/2017 09:30**

Sample Matrix: Solid

Analyte	Result	DL	LOD	LOQ	Units	Dilution	Analyzed	Method	Batch	Notes
Volatile Organic Compounds by GC/MS										
2-Hexanone	ND	2.20	4.41	8.81	ug/Kg dry	1	02/07/17 09:43	SW8260B	7B07001	U
Isopropylbenzene	ND	1.10	2.20	4.41	ug/Kg dry	1	02/07/17 09:43	SW8260B	7B07001	U
p-Isopropyltoluene	ND	1.10	2.20	4.41	ug/Kg dry	1	02/07/17 09:43	SW8260B	7B07001	U
Methyl Acetate	ND	2.20	4.41	8.81	ug/Kg dry	1	02/07/17 09:43	SW8260B	7B07001	U
Methylcyclohexane	ND	1.10	2.20	4.41	ug/Kg dry	1	02/07/17 09:43	SW8260B	7B07001	U
Methylene chloride	ND	2.20	4.41	8.81	ug/Kg dry	1	02/07/17 09:43	SW8260B	7B07001	U
4-Methyl-2-pentanone	ND	2.20	4.41	8.81	ug/Kg dry	1	02/07/17 09:43	SW8260B	7B07001	U
Methyl t-Butyl Ether	ND	1.10	2.20	4.41	ug/Kg dry	1	02/07/17 09:43	SW8260B	7B07001	U
Naphthalene	ND	1.10	2.20	4.41	ug/Kg dry	1	02/07/17 09:43	SW8260B	7B07001	U
n-Propylbenzene	ND	1.10	2.20	4.41	ug/Kg dry	1	02/07/17 09:43	SW8260B	7B07001	U
Styrene	ND	1.10	2.20	4.41	ug/Kg dry	1	02/07/17 09:43	SW8260B	7B07001	U
1,1,2,2-Tetrachloroethane	ND	1.10	2.20	4.41	ug/Kg dry	1	02/07/17 09:43	SW8260B	7B07001	U
Tetrachloroethene	ND	1.10	2.20	4.41	ug/Kg dry	1	02/07/17 09:43	SW8260B	7B07001	U
Toluene	ND	1.10	2.20	4.41	ug/Kg dry	1	02/07/17 09:43	SW8260B	7B07001	U
1,2,3-Trichlorobenzene	ND	1.10	2.20	4.41	ug/Kg dry	1	02/07/17 09:43	SW8260B	7B07001	U
1,2,4-Trichlorobenzene	ND	1.10	2.20	4.41	ug/Kg dry	1	02/07/17 09:43	SW8260B	7B07001	U
1,3,5-Trichlorobenzene	ND	1.10	2.20	4.41	ug/Kg dry	1	02/07/17 09:43	SW8260B	7B07001	U
1,1,1-Trichloroethane	ND	1.10	2.20	4.41	ug/Kg dry	1	02/07/17 09:43	SW8260B	7B07001	U
1,1,2-Trichloroethane	ND	1.10	2.20	4.41	ug/Kg dry	1	02/07/17 09:43	SW8260B	7B07001	U
Trichloroethene	ND	1.10	2.20	4.41	ug/Kg dry	1	02/07/17 09:43	SW8260B	7B07001	U
Trichlorofluoromethane	ND	2.20	4.41	8.81	ug/Kg dry	1	02/07/17 09:43	SW8260B	7B07001	U
1,1,2-Trichloro-1,2,2-trifluoroethane	ND	2.20	4.41	8.81	ug/Kg dry	1	02/07/17 09:43	SW8260B	7B07001	U
Vinyl chloride	ND	1.10	2.20	4.41	ug/Kg dry	1	02/07/17 09:43	SW8260B	7B07001	U
m,p-Xylene	ND	2.20	4.41	8.81	ug/Kg dry	1	02/07/17 09:43	SW8260B	7B07001	U
o-Xylene	ND	1.10	2.20	4.41	ug/Kg dry	1	02/07/17 09:43	SW8260B	7B07001	U
Xylenes (total)	ND	3.31	6.61	13.2	ug/Kg dry	1	02/07/17 09:43	SW8260B	7B07001	U
Surrogate: Bromofluorobenzene				*94.0 %*	*79-119*		*02/07/17 09:43*	*SW8260B*	*7B07001*	
Surrogate: Dibromofluoromethane				*97.3 %*	*78-119*		*02/07/17 09:43*	*SW8260B*	*7B07001*	
Surrogate: 1,2-Dichloroethane-d4				*97.6 %*	*71-136*		*02/07/17 09:43*	*SW8260B*	*7B07001*	
Surrogate: Toluene-d8				*99.4 %*	*85-116*		*02/07/17 09:43*	*SW8260B*	*7B07001*	

Laboratory Analytical Results Report

Client Sample ID: 106MW2-Confirm **Sample Collection Date/Time: 01/31/2017 14:35**

Lab Sample ID: 1702005-02 **Sample Received Date/Time: 02/01/2017 09:30**

Sample Matrix: Solid

Analyte	Result	DL	LOD	LOQ	Units	Dilution	Analyzed	Method	Batch	Notes
Semivolatile Organic Compounds by GC/MS										
Acenaphthene	ND	87.1	175	348	ug/Kg dry	1	02/07/17 19:47	SW8270D	7B06012	U
Acenaphthylene	ND	87.1	175	348	ug/Kg dry	1	02/07/17 19:47	SW8270D	7B06012	U
Acetophenone	ND	87.1	175	348	ug/Kg dry	1	02/07/17 19:47	SW8270D	7B06012	U
Aniline	ND	87.1	175	348	ug/Kg dry	1	02/07/17 19:47	SW8270D	7B06012	U
Anthracene	ND	87.1	175	348	ug/Kg dry	1	02/07/17 19:47	SW8270D	7B06012	U
Atrazine	ND	87.1	175	348	ug/Kg dry	1	02/07/17 19:47	SW8270D	7B06012	U
Benzaldehyde	ND	87.1	175	348	ug/Kg dry	1	02/07/17 19:47	SW8270D	7B06012	U
Benzidine	ND	87.1	1750	3480	ug/Kg dry	1	02/07/17 19:47	SW8270D	7B06012	U
Benzo(a)anthracene	ND	87.1	175	348	ug/Kg dry	1	02/07/17 19:47	SW8270D	7B06012	U
Benzo(a)pyrene	ND	87.1	175	348	ug/Kg dry	1	02/07/17 19:47	SW8270D	7B06012	U
Benzo(b)fluoranthene	**89.5**	87.1	175	348	ug/Kg dry	1	02/07/17 19:47	SW8270D	7B06012	J
Benzo(g,h,i)perylene	ND	87.1	175	348	ug/Kg dry	1	02/07/17 19:47	SW8270D	7B06012	U
Benzoic acid	ND	87.1	697	1390	ug/Kg dry	1	02/07/17 19:47	SW8270D	7B06012	QU
Benzo(k)fluoranthene	ND	87.1	175	348	ug/Kg dry	1	02/07/17 19:47	SW8270D	7B06012	U
Benzyl alcohol	ND	87.1	175	348	ug/Kg dry	1	02/07/17 19:47	SW8270D	7B06012	U
1,1-Biphenyl	ND	87.1	175	348	ug/Kg dry	1	02/07/17 19:47	SW8270D	7B06012	U
4-Bromophenyl-phenylether	ND	87.1	175	348	ug/Kg dry	1	02/07/17 19:47	SW8270D	7B06012	U
Butylbenzylphthalate	ND	87.1	175	348	ug/Kg dry	1	02/07/17 19:47	SW8270D	7B06012	U
Caprolactam	ND	87.1	175	348	ug/Kg dry	1	02/07/17 19:47	SW8270D	7B06012	U
Carbazole	ND	87.1	175	348	ug/Kg dry	1	02/07/17 19:47	SW8270D	7B06012	U
4-Chloro-3-methylphenol	ND	87.1	175	348	ug/Kg dry	1	02/07/17 19:47	SW8270D	7B06012	U
4-Chloroaniline	ND	87.1	175	348	ug/Kg dry	1	02/07/17 19:47	SW8270D	7B06012	U
Bis(2-chloroethoxy)methane	ND	87.1	175	348	ug/Kg dry	1	02/07/17 19:47	SW8270D	7B06012	U
Bis(2-chloroethyl)ether	ND	87.1	175	348	ug/Kg dry	1	02/07/17 19:47	SW8270D	7B06012	U
2,2'-Oxybis-1-chloropropane	ND	87.1	175	348	ug/Kg dry	1	02/07/17 19:47	SW8270D	7B06012	U
2-Chloronaphthalene	ND	87.1	175	348	ug/Kg dry	1	02/07/17 19:47	SW8270D	7B06012	U
2-Chlorophenol	ND	87.1	175	348	ug/Kg dry	1	02/07/17 19:47	SW8270D	7B06012	U
4-Chlorophenyl phenyl ether	ND	87.1	175	348	ug/Kg dry	1	02/07/17 19:47	SW8270D	7B06012	U
Chrysene	ND	87.1	175	348	ug/Kg dry	1	02/07/17 19:47	SW8270D	7B06012	U
Dibenz(a,h)anthracene	ND	87.1	175	348	ug/Kg dry	1	02/07/17 19:47	SW8270D	7B06012	U
Dibenzofuran	ND	87.1	175	348	ug/Kg dry	1	02/07/17 19:47	SW8270D	7B06012	U
Di-n-butylphthalate	**346**	87.1	175	348	ug/Kg dry	1	02/07/17 19:47	SW8270D	7B06012	JB
1,4-Dichlorobenzene	ND	87.1	175	348	ug/Kg dry	1	02/07/17 19:47	SW8270D	7B06012	U
1,3-Dichlorobenzene	ND	87.1	175	348	ug/Kg dry	1	02/07/17 19:47	SW8270D	7B06012	U
1,2-Dichlorobenzene	ND	87.1	175	348	ug/Kg dry	1	02/07/17 19:47	SW8270D	7B06012	U
3,3'-Dichlorobenzidine	ND	87.1	175	348	ug/Kg dry	1	02/07/17 19:47	SW8270D	7B06012	U
2,6-Dichlorophenol	ND	87.1	175	348	ug/Kg dry	1	02/07/17 19:47	SW8270D	7B06012	U
2,4-Dichlorophenol	ND	87.1	175	348	ug/Kg dry	1	02/07/17 19:47	SW8270D	7B06012	U
Diethylphthalate	ND	87.1	175	348	ug/Kg dry	1	02/07/17 19:47	SW8270D	7B06012	U
2,4-Dimethylphenol	ND	348	697	1390	ug/Kg dry	1	02/07/17 19:47	SW8270D	7B06012	U
Dimethyl phthalate	ND	87.1	175	348	ug/Kg dry	1	02/07/17 19:47	SW8270D	7B06012	U
4,6-Dinitro-2-methylphenol	ND	871	1750	3480	ug/Kg dry	1	02/07/17 19:47	SW8270D	7B06012	U
2,4-Dinitrophenol	ND	871	1750	3480	ug/Kg dry	1	02/07/17 19:47	SW8270D	7B06012	U

Laboratory Analytical Results Report

Client Sample ID: 106MW2-Confirm **Sample Collection Date/Time: 01/31/2017 14:35**

Lab Sample ID: 1702005-02 **Sample Received Date/Time: 02/01/2017 09:30**

Sample Matrix: Solid

Analyte	Result	DL	LOD	LOQ	Units	Dilution	Analyzed	Method	Batch	Notes
Semivolatile Organic Compounds by GC/MS										
2,4-Dinitrotoluene	ND	87.1	175	348	ug/Kg dry	1	02/07/17 19:47	SW8270D	7B06012	U
2,6-Dinitrotoluene	ND	87.1	175	348	ug/Kg dry	1	02/07/17 19:47	SW8270D	7B06012	U
Di-n-octylphthalate	ND	87.1	175	348	ug/Kg dry	1	02/07/17 19:47	SW8270D	7B06012	U
1,4-Dioxane	ND	87.1	175	348	ug/Kg dry	1	02/07/17 19:47	SW8270D	7B06012	U
1,2-Diphenylhydrazine (as Azobenzene)	ND	87.1	175	348	ug/Kg dry	1	02/07/17 19:47	SW8270D	7B06012	U
Bis(2-ethylhexyl)phthalate	**127**	87.1	175	348	ug/Kg dry	1	02/07/17 19:47	SW8270D	7B06012	J
Fluoranthene	**157**	87.1	175	348	ug/Kg dry	1	02/07/17 19:47	SW8270D	7B06012	J
Fluorene	ND	87.1	175	348	ug/Kg dry	1	02/07/17 19:47	SW8270D	7B06012	U
Hexachlorobenzene	ND	87.1	175	348	ug/Kg dry	1	02/07/17 19:47	SW8270D	7B06012	U
Hexachlorobutadiene	ND	87.1	175	348	ug/Kg dry	1	02/07/17 19:47	SW8270D	7B06012	U
Hexachlorocyclopentadiene	ND	87.1	175	348	ug/Kg dry	1	02/07/17 19:47	SW8270D	7B06012	U
Hexachloroethane	ND	87.1	175	348	ug/Kg dry	1	02/07/17 19:47	SW8270D	7B06012	U
Indeno(1,2,3-cd)pyrene	ND	87.1	175	348	ug/Kg dry	1	02/07/17 19:47	SW8270D	7B06012	U
Isophorone	ND	87.1	175	348	ug/Kg dry	1	02/07/17 19:47	SW8270D	7B06012	U
1-Methylnaphthalene	ND	87.1	175	348	ug/Kg dry	1	02/07/17 19:47	SW8270D	7B06012	U
2-Methylnaphthalene	ND	87.1	175	348	ug/Kg dry	1	02/07/17 19:47	SW8270D	7B06012	U
2-Methylphenol	ND	87.1	175	348	ug/Kg dry	1	02/07/17 19:47	SW8270D	7B06012	U
3-Methylphenol/4-Methylphenol	ND	87.1	175	348	ug/Kg dry	1	02/07/17 19:47	SW8270D	7B06012	U
3-Methylphenol	ND	87.1	175	348	ug/Kg dry	1	02/07/17 19:47	SW8270D	7B06012	U
4-Methylphenol	ND	87.1	175	348	ug/Kg dry	1	02/07/17 19:47	SW8270D	7B06012	U
Naphthalene	ND	87.1	175	348	ug/Kg dry	1	02/07/17 19:47	SW8270D	7B06012	U
4-Nitroaniline	ND	348	697	1390	ug/Kg dry	1	02/07/17 19:47	SW8270D	7B06012	U
3-Nitroaniline	ND	348	697	1390	ug/Kg dry	1	02/07/17 19:47	SW8270D	7B06012	U
2-Nitroaniline	ND	348	697	1390	ug/Kg dry	1	02/07/17 19:47	SW8270D	7B06012	U
Nitrobenzene	ND	87.1	175	348	ug/Kg dry	1	02/07/17 19:47	SW8270D	7B06012	U
4-Nitrophenol	ND	348	697	1390	ug/Kg dry	1	02/07/17 19:47	SW8270D	7B06012	U
2-Nitrophenol	ND	87.1	175	348	ug/Kg dry	1	02/07/17 19:47	SW8270D	7B06012	U
N-Nitrosodimethylamine	ND	87.1	175	348	ug/Kg dry	1	02/07/17 19:47	SW8270D	7B06012	U
N-Nitrosodiphenylamine	ND	87.1	175	348	ug/Kg dry	1	02/07/17 19:47	SW8270D	7B06012	U
N-Nitroso-di-n-propylamine	ND	87.1	175	348	ug/Kg dry	1	02/07/17 19:47	SW8270D	7B06012	U
Pentachlorophenol	ND	348	697	1390	ug/Kg dry	1	02/07/17 19:47	SW8270D	7B06012	U
Phenanthrene	**122**	87.1	175	348	ug/Kg dry	1	02/07/17 19:47	SW8270D	7B06012	J
Phenol	ND	87.1	175	348	ug/Kg dry	1	02/07/17 19:47	SW8270D	7B06012	U
Pyrene	**150**	87.1	175	348	ug/Kg dry	1	02/07/17 19:47	SW8270D	7B06012	J
1,2,4,5-Tetrachlorobenzene	ND	87.1	175	348	ug/Kg dry	1	02/07/17 19:47	SW8270D	7B06012	U
2,3,4,6-Tetrachlorophenol	ND	87.1	175	348	ug/Kg dry	1	02/07/17 19:47	SW8270D	7B06012	U
1,2,4-Trichlorobenzene	ND	87.1	175	348	ug/Kg dry	1	02/07/17 19:47	SW8270D	7B06012	U
2,4,6-Trichlorophenol	ND	87.1	175	348	ug/Kg dry	1	02/07/17 19:47	SW8270D	7B06012	U
2,4,5-Trichlorophenol	ND	87.1	175	348	ug/Kg dry	1	02/07/17 19:47	SW8270D	7B06012	U
Surrogate: 2-Fluorobiphenyl				*68.1 %*	*44-114*		*02/07/17 19:47*	*SW8270D*	*7B06012*	
Surrogate: 2-Fluorophenol				*63.8 %*	*35-115*		*02/07/17 19:47*	*SW8270D*	*7B06012*	
Surrogate: Nitrobenzene-d5				*49.4 %*	*37-122*		*02/07/17 19:47*	*SW8270D*	*7B06012*	

Laboratory Analytical Results Report

Client Sample ID: 106MW2-Confirm

Sample Collection Date/Time: 01/31/2017 14:35

Lab Sample ID: 1702005-02

Sample Received Date/Time: 02/01/2017 09:30

Sample Matrix: Solid

Analyte	Result	DL	LOD	LOQ	Units	Dilution	Analyzed	Method	Batch	Notes
Semivolatile Organic Compounds by GC/MS										
Surrogate: Phenol-d6				*61.4 %*	*33-122*		*02/07/17 19:47*	*SW8270D*	*7B06012*	
Surrogate: Terphenyl-d14				*73.4 %*	*54-127*		*02/07/17 19:47*	*SW8270D*	*7B06012*	
Surrogate: 2,4,6-Tribromophenol				*58.4 %*	*39-132*		*02/07/17 19:47*	*SW8270D*	*7B06012*	

Laboratory Analytical Results Report

Client Sample ID: 106MW2-Background **Sample Collection Date/Time: 01/31/2017 14:55**

Lab Sample ID: 1702005-03 **Sample Received Date/Time: 02/01/2017 09:30**

Sample Matrix: Solid

Analyte	Result	DL	LOD	LOQ	Units	Dilution	Analyzed	Method	Batch	Notes
Classical Chemistry Parameters										
% Solids	**93**	1.0	1.0	1.0	%	1	02/05/17 13:17	SM2540B	7B03417	
Volatile Organic Compounds by GC/MS										
Acetone	ND	5.70	11.4	22.8	ug/Kg dry	1	02/07/17 10:08	SW8260B	7B07001	U
Benzene	ND	1.42	2.85	5.70	ug/Kg dry	1	02/07/17 10:08	SW8260B	7B07001	U
Bromobenzene	ND	1.42	2.85	5.70	ug/Kg dry	1	02/07/17 10:08	SW8260B	7B07001	U
Bromochloromethane	ND	1.42	2.85	5.70	ug/Kg dry	1	02/07/17 10:08	SW8260B	7B07001	U
Bromodichloromethane	ND	1.42	2.85	5.70	ug/Kg dry	1	02/07/17 10:08	SW8260B	7B07001	U
Bromoform	ND	1.42	2.85	5.70	ug/Kg dry	1	02/07/17 10:08	SW8260B	7B07001	U
Bromomethane	ND	2.85	5.70	11.4	ug/Kg dry	1	02/07/17 10:08	SW8260B	7B07001	U
2-Butanone	ND	2.85	5.70	11.4	ug/Kg dry	1	02/07/17 10:08	SW8260B	7B07001	U
n-Butylbenzene	ND	1.42	2.85	5.70	ug/Kg dry	1	02/07/17 10:08	SW8260B	7B07001	U
sec-Butylbenzene	ND	1.42	2.85	5.70	ug/Kg dry	1	02/07/17 10:08	SW8260B	7B07001	U
tert-Butylbenzene	ND	1.42	2.85	5.70	ug/Kg dry	1	02/07/17 10:08	SW8260B	7B07001	U
Carbon disulfide	ND	1.42	2.85	5.70	ug/Kg dry	1	02/07/17 10:08	SW8260B	7B07001	U
Carbon tetrachloride	ND	1.42	2.85	5.70	ug/Kg dry	1	02/07/17 10:08	SW8260B	7B07001	U
Chlorobenzene	ND	1.42	2.85	5.70	ug/Kg dry	1	02/07/17 10:08	SW8260B	7B07001	U
Chloroethane	ND	2.85	5.70	11.4	ug/Kg dry	1	02/07/17 10:08	SW8260B	7B07001	U
Chloroform	ND	1.42	2.85	5.70	ug/Kg dry	1	02/07/17 10:08	SW8260B	7B07001	U
Chloromethane	ND	2.85	5.70	11.4	ug/Kg dry	1	02/07/17 10:08	SW8260B	7B07001	U
2-Chlorotoluene	ND	1.42	2.85	5.70	ug/Kg dry	1	02/07/17 10:08	SW8260B	7B07001	U
4-Chlorotoluene	ND	1.42	2.85	5.70	ug/Kg dry	1	02/07/17 10:08	SW8260B	7B07001	U
Cyclohexane	ND	1.42	2.85	5.70	ug/Kg dry	1	02/07/17 10:08	SW8260B	7B07001	U
1,2-Dibromo-3-chloropropane	ND	2.85	5.70	11.4	ug/Kg dry	1	02/07/17 10:08	SW8260B	7B07001	U
Dibromochloromethane	ND	1.42	2.85	5.70	ug/Kg dry	1	02/07/17 10:08	SW8260B	7B07001	U
1,2-Dibromoethane (EDB)	ND	1.42	2.85	5.70	ug/Kg dry	1	02/07/17 10:08	SW8260B	7B07001	U
Dibromomethane	ND	1.42	2.85	5.70	ug/Kg dry	1	02/07/17 10:08	SW8260B	7B07001	U
1,2-Dichlorobenzene	ND	1.42	2.85	5.70	ug/Kg dry	1	02/07/17 10:08	SW8260B	7B07001	U
1,4-Dichlorobenzene	ND	1.42	2.85	5.70	ug/Kg dry	1	02/07/17 10:08	SW8260B	7B07001	U
1,3-Dichlorobenzene	ND	1.42	2.85	5.70	ug/Kg dry	1	02/07/17 10:08	SW8260B	7B07001	U
Dichlorodifluoromethane	ND	2.85	5.70	11.4	ug/Kg dry	1	02/07/17 10:08	SW8260B	7B07001	U
1,1-Dichloroethane	ND	1.42	2.85	5.70	ug/Kg dry	1	02/07/17 10:08	SW8260B	7B07001	U
1,2-Dichloroethane	ND	1.42	2.85	5.70	ug/Kg dry	1	02/07/17 10:08	SW8260B	7B07001	U
1,1-Dichloroethene	ND	1.42	2.85	5.70	ug/Kg dry	1	02/07/17 10:08	SW8260B	7B07001	U
cis-1,2-Dichloroethene	ND	1.42	2.85	5.70	ug/Kg dry	1	02/07/17 10:08	SW8260B	7B07001	U
trans-1,2-Dichloroethene	ND	1.42	2.85	5.70	ug/Kg dry	1	02/07/17 10:08	SW8260B	7B07001	U
1,2-Dichloropropane	ND	1.42	2.85	5.70	ug/Kg dry	1	02/07/17 10:08	SW8260B	7B07001	U
1,3-Dichloropropane	ND	1.42	2.85	5.70	ug/Kg dry	1	02/07/17 10:08	SW8260B	7B07001	U
2,2-Dichloropropane	ND	1.42	2.85	5.70	ug/Kg dry	1	02/07/17 10:08	SW8260B	7B07001	U
1,1-Dichloropropene	ND	1.42	2.85	5.70	ug/Kg dry	1	02/07/17 10:08	SW8260B	7B07001	U
cis-1,3-Dichloropropene	ND	1.42	2.85	5.70	ug/Kg dry	1	02/07/17 10:08	SW8260B	7B07001	U
trans-1,3-Dichloropropene	ND	1.42	2.85	5.70	ug/Kg dry	1	02/07/17 10:08	SW8260B	7B07001	U
Ethylbenzene	ND	1.42	2.85	5.70	ug/Kg dry	1	02/07/17 10:08	SW8260B	7B07001	U
Hexachlorobutadiene	ND	1.42	2.85	5.70	ug/Kg dry	1	02/07/17 10:08	SW8260B	7B07001	U

Laboratory Analytical Results Report

Client Sample ID: 106MW2-Background **Sample Collection Date/Time: 01/31/2017 14:55**

Lab Sample ID: 1702005-03 **Sample Received Date/Time: 02/01/2017 09:30**

Sample Matrix: Solid

Analyte	Result	DL	LOD	LOQ	Units	Dilution	Analyzed	Method	Batch	Notes
Volatile Organic Compounds by GC/MS										
2-Hexanone	ND	2.85	5.70	11.4	ug/Kg dry	1	02/07/17 10:08	SW8260B	7B07001	U
Isopropylbenzene	ND	1.42	2.85	5.70	ug/Kg dry	1	02/07/17 10:08	SW8260B	7B07001	U
p-Isopropyltoluene	ND	1.42	2.85	5.70	ug/Kg dry	1	02/07/17 10:08	SW8260B	7B07001	U
Methyl Acetate	ND	2.85	5.70	11.4	ug/Kg dry	1	02/07/17 10:08	SW8260B	7B07001	U
Methylcyclohexane	ND	1.42	2.85	5.70	ug/Kg dry	1	02/07/17 10:08	SW8260B	7B07001	U
Methylene chloride	ND	2.85	5.70	11.4	ug/Kg dry	1	02/07/17 10:08	SW8260B	7B07001	U
4-Methyl-2-pentanone	ND	2.85	5.70	11.4	ug/Kg dry	1	02/07/17 10:08	SW8260B	7B07001	U
Methyl t-Butyl Ether	ND	1.42	2.85	5.70	ug/Kg dry	1	02/07/17 10:08	SW8260B	7B07001	U
Naphthalene	ND	1.42	2.85	5.70	ug/Kg dry	1	02/07/17 10:08	SW8260B	7B07001	U
n-Propylbenzene	ND	1.42	2.85	5.70	ug/Kg dry	1	02/07/17 10:08	SW8260B	7B07001	U
Styrene	ND	1.42	2.85	5.70	ug/Kg dry	1	02/07/17 10:08	SW8260B	7B07001	U
1,1,2,2-Tetrachloroethane	ND	1.42	2.85	5.70	ug/Kg dry	1	02/07/17 10:08	SW8260B	7B07001	U
Tetrachloroethene	ND	1.42	2.85	5.70	ug/Kg dry	1	02/07/17 10:08	SW8260B	7B07001	U
Toluene	ND	1.42	2.85	5.70	ug/Kg dry	1	02/07/17 10:08	SW8260B	7B07001	U
1,2,3-Trichlorobenzene	ND	1.42	2.85	5.70	ug/Kg dry	1	02/07/17 10:08	SW8260B	7B07001	U
1,2,4-Trichlorobenzene	ND	1.42	2.85	5.70	ug/Kg dry	1	02/07/17 10:08	SW8260B	7B07001	U
1,3,5-Trichlorobenzene	ND	1.42	2.85	5.70	ug/Kg dry	1	02/07/17 10:08	SW8260B	7B07001	U
1,1,1-Trichloroethane	ND	1.42	2.85	5.70	ug/Kg dry	1	02/07/17 10:08	SW8260B	7B07001	U
1,1,2-Trichloroethane	ND	1.42	2.85	5.70	ug/Kg dry	1	02/07/17 10:08	SW8260B	7B07001	U
Trichloroethene	ND	1.42	2.85	5.70	ug/Kg dry	1	02/07/17 10:08	SW8260B	7B07001	U
Trichlorofluoromethane	ND	2.85	5.70	11.4	ug/Kg dry	1	02/07/17 10:08	SW8260B	7B07001	U
1,1,2-Trichloro-1,2,2-trifluoroethane	ND	2.85	5.70	11.4	ug/Kg dry	1	02/07/17 10:08	SW8260B	7B07001	U
Vinyl chloride	ND	1.42	2.85	5.70	ug/Kg dry	1	02/07/17 10:08	SW8260B	7B07001	U
m,p-Xylene	ND	2.85	5.70	11.4	ug/Kg dry	1	02/07/17 10:08	SW8260B	7B07001	U
o-Xylene	ND	1.42	2.85	5.70	ug/Kg dry	1	02/07/17 10:08	SW8260B	7B07001	U
Xylenes (total)	ND	4.27	8.55	17.1	ug/Kg dry	1	02/07/17 10:08	SW8260B	7B07001	U
Surrogate: Bromofluorobenzene				*97.1 %*	*79-119*		*02/07/17 10:08*	*SW8260B*	*7B07001*	
Surrogate: Dibromofluoromethane				*99.0 %*	*78-119*		*02/07/17 10:08*	*SW8260B*	*7B07001*	
Surrogate: 1,2-Dichloroethane-d4				*99.1 %*	*71-136*		*02/07/17 10:08*	*SW8260B*	*7B07001*	
Surrogate: Toluene-d8				*101 %*	*85-116*		*02/07/17 10:08*	*SW8260B*	*7B07001*	

Laboratory Analytical Results Report

Client Sample ID: 106MW2-Background **Sample Collection Date/Time: 01/31/2017 14:55**

Lab Sample ID: 1702005-03 **Sample Received Date/Time: 02/01/2017 09:30**

Sample Matrix: Solid

Analyte	Result	DL	LOD	LOQ	Units	Dilution	Analyzed	Method	Batch	Notes
Semivolatile Organic Compounds by GC/MS										
Acenaphthene	ND	89.5	179	358	ug/Kg dry	1	02/07/17 20:16	SW8270D	7B06012	U
Acenaphthylene	ND	89.5	179	358	ug/Kg dry	1	02/07/17 20:16	SW8270D	7B06012	U
Acetophenone	ND	89.5	179	358	ug/Kg dry	1	02/07/17 20:16	SW8270D	7B06012	U
Aniline	ND	89.5	179	358	ug/Kg dry	1	02/07/17 20:16	SW8270D	7B06012	U
Anthracene	ND	89.5	179	358	ug/Kg dry	1	02/07/17 20:16	SW8270D	7B06012	U
Atrazine	ND	89.5	179	358	ug/Kg dry	1	02/07/17 20:16	SW8270D	7B06012	U
Benzaldehyde	ND	89.5	179	358	ug/Kg dry	1	02/07/17 20:16	SW8270D	7B06012	U
Benzidine	ND	89.5	1790	3580	ug/Kg dry	1	02/07/17 20:16	SW8270D	7B06012	U
Benzo(a)anthracene	ND	89.5	179	358	ug/Kg dry	1	02/07/17 20:16	SW8270D	7B06012	U
Benzo(a)pyrene	ND	89.5	179	358	ug/Kg dry	1	02/07/17 20:16	SW8270D	7B06012	U
Benzo(b)fluoranthene	**116**	89.5	179	358	ug/Kg dry	1	02/07/17 20:16	SW8270D	7B06012	J
Benzo(g,h,i)perylene	ND	89.5	179	358	ug/Kg dry	1	02/07/17 20:16	SW8270D	7B06012	U
Benzoic acid	ND	89.5	716	1430	ug/Kg dry	1	02/07/17 20:16	SW8270D	7B06012	QU
Benzo(k)fluoranthene	ND	89.5	179	358	ug/Kg dry	1	02/07/17 20:16	SW8270D	7B06012	U
Benzyl alcohol	ND	89.5	179	358	ug/Kg dry	1	02/07/17 20:16	SW8270D	7B06012	U
1,1-Biphenyl	ND	89.5	179	358	ug/Kg dry	1	02/07/17 20:16	SW8270D	7B06012	U
4-Bromophenyl-phenylether	ND	89.5	179	358	ug/Kg dry	1	02/07/17 20:16	SW8270D	7B06012	U
Butylbenzylphthalate	ND	89.5	179	358	ug/Kg dry	1	02/07/17 20:16	SW8270D	7B06012	U
Caprolactam	ND	89.5	179	358	ug/Kg dry	1	02/07/17 20:16	SW8270D	7B06012	U
Carbazole	ND	89.5	179	358	ug/Kg dry	1	02/07/17 20:16	SW8270D	7B06012	U
4-Chloro-3-methylphenol	ND	89.5	179	358	ug/Kg dry	1	02/07/17 20:16	SW8270D	7B06012	U
4-Chloroaniline	ND	89.5	179	358	ug/Kg dry	1	02/07/17 20:16	SW8270D	7B06012	U
Bis(2-chloroethoxy)methane	ND	89.5	179	358	ug/Kg dry	1	02/07/17 20:16	SW8270D	7B06012	U
Bis(2-chloroethyl)ether	ND	89.5	179	358	ug/Kg dry	1	02/07/17 20:16	SW8270D	7B06012	U
2,2'-Oxybis-1-chloropropane	ND	89.5	179	358	ug/Kg dry	1	02/07/17 20:16	SW8270D	7B06012	U
2-Chloronaphthalene	ND	89.5	179	358	ug/Kg dry	1	02/07/17 20:16	SW8270D	7B06012	U
2-Chlorophenol	ND	89.5	179	358	ug/Kg dry	1	02/07/17 20:16	SW8270D	7B06012	U
4-Chlorophenyl phenyl ether	ND	89.5	179	358	ug/Kg dry	1	02/07/17 20:16	SW8270D	7B06012	U
Chrysene	**104**	89.5	179	358	ug/Kg dry	1	02/07/17 20:16	SW8270D	7B06012	J
Dibenz(a,h)anthracene	ND	89.5	179	358	ug/Kg dry	1	02/07/17 20:16	SW8270D	7B06012	U
Dibenzofuran	ND	89.5	179	358	ug/Kg dry	1	02/07/17 20:16	SW8270D	7B06012	U
Di-n-butylphthalate	**333**	89.5	179	358	ug/Kg dry	1	02/07/17 20:16	SW8270D	7B06012	JB
1,4-Dichlorobenzene	ND	89.5	179	358	ug/Kg dry	1	02/07/17 20:16	SW8270D	7B06012	U
1,3-Dichlorobenzene	ND	89.5	179	358	ug/Kg dry	1	02/07/17 20:16	SW8270D	7B06012	U
1,2-Dichlorobenzene	ND	89.5	179	358	ug/Kg dry	1	02/07/17 20:16	SW8270D	7B06012	U
3,3'-Dichlorobenzidine	ND	89.5	179	358	ug/Kg dry	1	02/07/17 20:16	SW8270D	7B06012	U
2,6-Dichlorophenol	ND	89.5	179	358	ug/Kg dry	1	02/07/17 20:16	SW8270D	7B06012	U
2,4-Dichlorophenol	ND	89.5	179	358	ug/Kg dry	1	02/07/17 20:16	SW8270D	7B06012	U
Diethylphthalate	ND	89.5	179	358	ug/Kg dry	1	02/07/17 20:16	SW8270D	7B06012	U
2,4-Dimethylphenol	ND	358	716	1430	ug/Kg dry	1	02/07/17 20:16	SW8270D	7B06012	U
Dimethyl phthalate	ND	89.5	179	358	ug/Kg dry	1	02/07/17 20:16	SW8270D	7B06012	U
4,6-Dinitro-2-methylphenol	ND	895	1790	3580	ug/Kg dry	1	02/07/17 20:16	SW8270D	7B06012	U
2,4-Dinitrophenol	ND	895	1790	3580	ug/Kg dry	1	02/07/17 20:16	SW8270D	7B06012	U

Laboratory Analytical Results Report

Client Sample ID: 106MW2-Background **Sample Collection Date/Time: 01/31/2017 14:55**

Lab Sample ID: 1702005-03 **Sample Received Date/Time: 02/01/2017 09:30**

Sample Matrix: Solid

Analyte	Result	DL	LOD	LOQ	Units	Dilution	Analyzed	Method	Batch	Notes
Semivolatile Organic Compounds by GC/MS										
2,4-Dinitrotoluene	ND	89.5	179	358	ug/Kg dry	1	02/07/17 20:16	SW8270D	7B06012	U
2,6-Dinitrotoluene	ND	89.5	179	358	ug/Kg dry	1	02/07/17 20:16	SW8270D	7B06012	U
Di-n-octylphthalate	ND	89.5	179	358	ug/Kg dry	1	02/07/17 20:16	SW8270D	7B06012	U
1,4-Dioxane	ND	89.5	179	358	ug/Kg dry	1	02/07/17 20:16	SW8270D	7B06012	U
1,2-Diphenylhydrazine (as Azobenzene)	ND	89.5	179	358	ug/Kg dry	1	02/07/17 20:16	SW8270D	7B06012	U
Bis(2-ethylhexyl)phthalate	**685**	89.5	179	358	ug/Kg dry	1	02/07/17 20:16	SW8270D	7B06012	
Fluoranthene	**175**	89.5	179	358	ug/Kg dry	1	02/07/17 20:16	SW8270D	7B06012	J
Fluorene	ND	89.5	179	358	ug/Kg dry	1	02/07/17 20:16	SW8270D	7B06012	U
Hexachlorobenzene	ND	89.5	179	358	ug/Kg dry	1	02/07/17 20:16	SW8270D	7B06012	U
Hexachlorobutadiene	ND	89.5	179	358	ug/Kg dry	1	02/07/17 20:16	SW8270D	7B06012	U
Hexachlorocyclopentadiene	ND	89.5	179	358	ug/Kg dry	1	02/07/17 20:16	SW8270D	7B06012	U
Hexachloroethane	ND	89.5	179	358	ug/Kg dry	1	02/07/17 20:16	SW8270D	7B06012	U
Indeno(1,2,3-cd)pyrene	ND	89.5	179	358	ug/Kg dry	1	02/07/17 20:16	SW8270D	7B06012	U
Isophorone	ND	89.5	179	358	ug/Kg dry	1	02/07/17 20:16	SW8270D	7B06012	U
1-Methylnaphthalene	ND	89.5	179	358	ug/Kg dry	1	02/07/17 20:16	SW8270D	7B06012	U
2-Methylnaphthalene	ND	89.5	179	358	ug/Kg dry	1	02/07/17 20:16	SW8270D	7B06012	U
2-Methylphenol	ND	89.5	179	358	ug/Kg dry	1	02/07/17 20:16	SW8270D	7B06012	U
3-Methylphenol	ND	89.5	179	358	ug/Kg dry	1	02/07/17 20:16	SW8270D	7B06012	U
3-Methylphenol/4-Methylphenol	ND	89.5	179	358	ug/Kg dry	1	02/07/17 20:16	SW8270D	7B06012	U
4-Methylphenol	ND	89.5	179	358	ug/Kg dry	1	02/07/17 20:16	SW8270D	7B06012	U
Naphthalene	ND	89.5	179	358	ug/Kg dry	1	02/07/17 20:16	SW8270D	7B06012	U
4-Nitroaniline	ND	358	716	1430	ug/Kg dry	1	02/07/17 20:16	SW8270D	7B06012	U
3-Nitroaniline	ND	358	716	1430	ug/Kg dry	1	02/07/17 20:16	SW8270D	7B06012	U
2-Nitroaniline	ND	358	716	1430	ug/Kg dry	1	02/07/17 20:16	SW8270D	7B06012	U
Nitrobenzene	ND	89.5	179	358	ug/Kg dry	1	02/07/17 20:16	SW8270D	7B06012	U
4-Nitrophenol	ND	358	716	1430	ug/Kg dry	1	02/07/17 20:16	SW8270D	7B06012	U
2-Nitrophenol	ND	89.5	179	358	ug/Kg dry	1	02/07/17 20:16	SW8270D	7B06012	U
N-Nitrosodimethylamine	ND	89.5	179	358	ug/Kg dry	1	02/07/17 20:16	SW8270D	7B06012	U
N-Nitrosodiphenylamine	ND	89.5	179	358	ug/Kg dry	1	02/07/17 20:16	SW8270D	7B06012	U
N-Nitroso-di-n-propylamine	ND	89.5	179	358	ug/Kg dry	1	02/07/17 20:16	SW8270D	7B06012	U
Pentachlorophenol	ND	358	716	1430	ug/Kg dry	1	02/07/17 20:16	SW8270D	7B06012	U
Phenanthrene	**125**	89.5	179	358	ug/Kg dry	1	02/07/17 20:16	SW8270D	7B06012	J
Phenol	ND	89.5	179	358	ug/Kg dry	1	02/07/17 20:16	SW8270D	7B06012	U
Pyrene	**176**	89.5	179	358	ug/Kg dry	1	02/07/17 20:16	SW8270D	7B06012	J
1,2,4,5-Tetrachlorobenzene	ND	89.5	179	358	ug/Kg dry	1	02/07/17 20:16	SW8270D	7B06012	U
2,3,4,6-Tetrachlorophenol	ND	89.5	179	358	ug/Kg dry	1	02/07/17 20:16	SW8270D	7B06012	U
1,2,4-Trichlorobenzene	ND	89.5	179	358	ug/Kg dry	1	02/07/17 20:16	SW8270D	7B06012	U
2,4,6-Trichlorophenol	ND	89.5	179	358	ug/Kg dry	1	02/07/17 20:16	SW8270D	7B06012	U
2,4,5-Trichlorophenol	ND	89.5	179	358	ug/Kg dry	1	02/07/17 20:16	SW8270D	7B06012	U
Surrogate: 2-Fluorobiphenyl				*57.7 %*	*44-114*		*02/07/17 20:16*	*SW8270D*	*7B06012*	
Surrogate: 2-Fluorophenol				*54.1 %*	*35-115*		*02/07/17 20:16*	*SW8270D*	*7B06012*	
Surrogate: Nitrobenzene-d5				*41.8 %*	*37-122*		*02/07/17 20:16*	*SW8270D*	*7B06012*	

Laboratory Analytical Results Report

Client Sample ID: 106MW2-Background

Sample Collection Date/Time: 01/31/2017 14:55

Lab Sample ID: 1702005-03

Sample Received Date/Time: 02/01/2017 09:30

Sample Matrix: Solid

Analyte	Result	DL	LOD	LOQ	Units	Dilution	Analyzed	Method	Batch	Notes
Semivolatile Organic Compounds by GC/MS										
Surrogate: Phenol-d6				*51.0 %*	*33-122*		*02/07/17 20:16*	*SW8270D*	*7B06012*	
Surrogate: Terphenyl-d14				*64.1 %*	*54-127*		*02/07/17 20:16*	*SW8270D*	*7B06012*	
Surrogate: 2,4,6-Tribromophenol				*48.5 %*	*39-132*		*02/07/17 20:16*	*SW8270D*	*7B06012*	

Volatile Organic Compounds by GC/MS - Quality Control

Analyte	Result	DL	LOD	LOQ	Units	Spike Level	Source Result	%REC	%REC Limits	RPD	RPD Limit	Notes
Batch 7B07001												
Blank					Prepared & Analyzed: 02/07/2017							
Acetone	ND	5.00	10.0	20.0	ug/Kg wet							U
Benzene	ND	1.25	2.50	5.00	ug/Kg wet							U
Bromobenzene	ND	1.25	2.50	5.00	ug/Kg wet							U
Bromochloromethane	ND	1.25	2.50	5.00	ug/Kg wet							U
Bromodichloromethane	ND	1.25	2.50	5.00	ug/Kg wet							U
Bromoform	ND	1.25	2.50	5.00	ug/Kg wet							U
Bromomethane	ND	2.50	5.00	10.0	ug/Kg wet							U
2-Butanone	ND	2.50	5.00	10.0	ug/Kg wet							U
n-Butylbenzene	ND	1.25	2.50	5.00	ug/Kg wet							U
sec-Butylbenzene	ND	1.25	2.50	5.00	ug/Kg wet							U
tert-Butylbenzene	ND	1.25	2.50	5.00	ug/Kg wet							U
Carbon disulfide	ND	1.25	2.50	5.00	ug/Kg wet							U
Carbon tetrachloride	ND	1.25	2.50	5.00	ug/Kg wet							U
Chlorobenzene	ND	1.25	2.50	5.00	ug/Kg wet							U
Chloroethane	ND	2.50	5.00	10.0	ug/Kg wet							U
Chloroform	ND	1.25	2.50	5.00	ug/Kg wet							U
Chloromethane	ND	2.50	5.00	10.0	ug/Kg wet							U
2-Chlorotoluene	ND	1.25	2.50	5.00	ug/Kg wet							U
4-Chlorotoluene	ND	1.25	2.50	5.00	ug/Kg wet							U
Cyclohexane	ND	1.25	2.50	5.00	ug/Kg wet							U
1,2-Dibromo-3-chloropropane	ND	2.50	5.00	10.0	ug/Kg wet							U
Dibromochloromethane	ND	1.25	2.50	5.00	ug/Kg wet							U
1,2-Dibromoethane (EDB)	ND	1.25	2.50	5.00	ug/Kg wet							U
Dibromomethane	ND	1.25	2.50	5.00	ug/Kg wet							U
1,2-Dichlorobenzene	ND	1.25	2.50	5.00	ug/Kg wet							U
1,4-Dichlorobenzene	ND	1.25	2.50	5.00	ug/Kg wet							U

Volatile Organic Compounds by GC/MS - Quality Control

Analyte	Result	DL	LOD	LOQ	Units	Spike Level	Source Result	%REC	%REC Limits	RPD	RPD Limit	Notes
Batch 7B07001												
Blank					Prepared & Analyzed: 02/07/2017							
1,3-Dichlorobenzene	ND	1.25	2.50	5.00	ug/Kg wet							U
Dichlorodifluoromethane	ND	2.50	5.00	10.0	ug/Kg wet							U
1,1-Dichloroethane	ND	1.25	2.50	5.00	ug/Kg wet							U
1,2-Dichloroethane	ND	1.25	2.50	5.00	ug/Kg wet							U
1,1-Dichloroethene	ND	1.25	2.50	5.00	ug/Kg wet							U
cis-1,2-Dichloroethene	ND	1.25	2.50	5.00	ug/Kg wet							U
trans-1,2-Dichloroethene	ND	1.25	2.50	5.00	ug/Kg wet							U
1,2-Dichloropropane	ND	1.25	2.50	5.00	ug/Kg wet							U
1,3-Dichloropropane	ND	1.25	2.50	5.00	ug/Kg wet							U
2,2-Dichloropropane	ND	1.25	2.50	5.00	ug/Kg wet							U
1,1-Dichloropropene	ND	1.25	2.50	5.00	ug/Kg wet							U
cis-1,3-Dichloropropene	ND	1.25	2.50	5.00	ug/Kg wet							U
trans-1,3-Dichloropropene	ND	1.25	2.50	5.00	ug/Kg wet							U
Ethylbenzene	ND	1.25	2.50	5.00	ug/Kg wet							U
Hexachlorobutadiene	ND	1.25	2.50	5.00	ug/Kg wet							U
2-Hexanone	ND	2.50	5.00	10.0	ug/Kg wet							U
Isopropylbenzene	ND	1.25	2.50	5.00	ug/Kg wet							U
p-Isopropyltoluene	ND	1.25	2.50	5.00	ug/Kg wet							U
Methyl Acetate	ND	2.50	5.00	10.0	ug/Kg wet							Y, U
Methylcyclohexane	ND	1.25	2.50	5.00	ug/Kg wet							U
Methylene chloride	ND	2.50	5.00	10.0	ug/Kg wet							U
4-Methyl-2-pentanone	ND	2.50	5.00	10.0	ug/Kg wet							U
Methyl t-Butyl Ether	ND	1.25	2.50	5.00	ug/Kg wet							U
Naphthalene	ND	1.25	2.50	5.00	ug/Kg wet							U
n-Propylbenzene	ND	1.25	2.50	5.00	ug/Kg wet							U
Styrene	ND	1.25	2.50	5.00	ug/Kg wet							U

Volatile Organic Compounds by GC/MS - Quality Control

Analyte	Result	DL	LOD	LOQ	Units	Spike Level	Source Result	%REC	%REC Limits	RPD	RPD Limit	Notes
Batch 7B07001												
Blank					Prepared & Analyzed: 02/07/2017							
1,1,2,2-Tetrachloroethane	ND	1.25	2.50	5.00	ug/Kg wet							U
Tetrachloroethene	ND	1.25	2.50	5.00	ug/Kg wet							U
Toluene	ND	1.25	2.50	5.00	ug/Kg wet							U
1,2,3-Trichlorobenzene	ND	1.25	2.50	5.00	ug/Kg wet							U
1,2,4-Trichlorobenzene	ND	1.25	2.50	5.00	ug/Kg wet							U
1,3,5-Trichlorobenzene	ND	1.25	2.50	5.00	ug/Kg wet							U
1,1,1-Trichloroethane	ND	1.25	2.50	5.00	ug/Kg wet							U
1,1,2-Trichloroethane	ND	1.25	2.50	5.00	ug/Kg wet							U
Trichloroethene	ND	1.25	2.50	5.00	ug/Kg wet							U
Trichlorofluoromethane	ND	2.50	5.00	10.0	ug/Kg wet							U
1,1,2-Trichloro-1,2,2-trifluoroethane	ND	2.50	5.00	10.0	ug/Kg wet							U
Vinyl chloride	ND	1.25	2.50	5.00	ug/Kg wet							U
m,p-Xylene	ND	2.50	5.00	10.0	ug/Kg wet							U
o-Xylene	ND	1.25	2.50	5.00	ug/Kg wet							U
Xylenes (total)	ND	3.75	7.50	15.0	ug/Kg wet							U
Surrogate: Bromofluorobenzene	*29.32*				*ug/Kg wet*	*30.00*		*97.7*	*79-119*			
Surrogate: Dibromofluoromethane	*29.13*				*ug/Kg wet*	*30.00*		*97.1*	*78-119*			
Surrogate: 1,2-Dichloroethane-d4	*28.13*				*ug/Kg wet*	*30.00*		*93.8*	*71-136*			
Surrogate: Toluene-d8	*30.16*				*ug/Kg wet*	*30.00*		*101*	*85-116*			
Blank					Prepared & Analyzed: 02/07/2017							
Acetone	ND	5.00	10.0	20.0	ug/Kg wet							U
Benzene	ND	1.25	2.50	5.00	ug/Kg wet							U
Bromobenzene	ND	1.25	2.50	5.00	ug/Kg wet							U
Bromochloromethane	ND	1.25	2.50	5.00	ug/Kg wet							U
Bromodichloromethane	ND	1.25	2.50	5.00	ug/Kg wet							U
Bromoform	ND	1.25	2.50	5.00	ug/Kg wet							U

Volatile Organic Compounds by GC/MS - Quality Control

Analyte	Result	DL	LOD	LOQ	Units	Spike Level	Source Result	%REC	%REC Limits	RPD	RPD Limit	Notes
Batch 7B07001												
Blank					Prepared & Analyzed: 02/07/2017							
Bromomethane	ND	2.50	5.00	10.0	ug/Kg wet							U
2-Butanone	ND	2.50	5.00	10.0	ug/Kg wet							U
n-Butylbenzene	ND	1.25	2.50	5.00	ug/Kg wet							U
sec-Butylbenzene	ND	1.25	2.50	5.00	ug/Kg wet							U
tert-Butylbenzene	ND	1.25	2.50	5.00	ug/Kg wet							U
Carbon disulfide	ND	1.25	2.50	5.00	ug/Kg wet							U
Carbon tetrachloride	ND	1.25	2.50	5.00	ug/Kg wet							U
Chlorobenzene	ND	1.25	2.50	5.00	ug/Kg wet							U
Chloroethane	ND	2.50	5.00	10.0	ug/Kg wet							U
Chloroform	ND	1.25	2.50	5.00	ug/Kg wet							U
Chloromethane	ND	2.50	5.00	10.0	ug/Kg wet							U
2-Chlorotoluene	ND	1.25	2.50	5.00	ug/Kg wet							U
4-Chlorotoluene	ND	1.25	2.50	5.00	ug/Kg wet							U
Cyclohexane	ND	1.25	2.50	5.00	ug/Kg wet							U
1,2-Dibromo-3-chloropropane	ND	2.50	5.00	10.0	ug/Kg wet							U
Dibromochloromethane	ND	1.25	2.50	5.00	ug/Kg wet							U
1,2-Dibromoethane (EDB)	ND	1.25	2.50	5.00	ug/Kg wet							U
Dibromomethane	ND	1.25	2.50	5.00	ug/Kg wet							U
1,2-Dichlorobenzene	ND	1.25	2.50	5.00	ug/Kg wet							U
1,4-Dichlorobenzene	ND	1.25	2.50	5.00	ug/Kg wet							U
1,3-Dichlorobenzene	ND	1.25	2.50	5.00	ug/Kg wet							U
Dichlorodifluoromethane	ND	2.50	5.00	10.0	ug/Kg wet							U
1,1-Dichloroethane	ND	1.25	2.50	5.00	ug/Kg wet							U
1,2-Dichloroethane	ND	1.25	2.50	5.00	ug/Kg wet							U
1,1-Dichloroethene	ND	1.25	2.50	5.00	ug/Kg wet							U
cis-1,2-Dichloroethene	ND	1.25	2.50	5.00	ug/Kg wet							U

Volatile Organic Compounds by GC/MS - Quality Control

Analyte	Result	DL	LOD	LOQ	Units	Spike Level	Source Result	%REC	%REC Limits	RPD	RPD Limit	Notes
Batch 7B07001												
Blank					Prepared & Analyzed: 02/07/2017							
trans-1,2-Dichloroethene	ND	1.25	2.50	5.00	ug/Kg wet							U
1,2-Dichloropropane	ND	1.25	2.50	5.00	ug/Kg wet							U
1,3-Dichloropropane	ND	1.25	2.50	5.00	ug/Kg wet							U
2,2-Dichloropropane	ND	1.25	2.50	5.00	ug/Kg wet							U
1,1-Dichloropropene	ND	1.25	2.50	5.00	ug/Kg wet							U
cis-1,3-Dichloropropene	ND	1.25	2.50	5.00	ug/Kg wet							U
trans-1,3-Dichloropropene	ND	1.25	2.50	5.00	ug/Kg wet							U
Ethylbenzene	ND	1.25	2.50	5.00	ug/Kg wet							U
Hexachlorobutadiene	ND	1.25	2.50	5.00	ug/Kg wet							U
2-Hexanone	ND	2.50	5.00	10.0	ug/Kg wet							U
Isopropylbenzene	ND	1.25	2.50	5.00	ug/Kg wet							U
p-Isopropyltoluene	ND	1.25	2.50	5.00	ug/Kg wet							U
Methyl Acetate	ND	2.50	5.00	10.0	ug/Kg wet							Y, U
Methylcyclohexane	ND	1.25	2.50	5.00	ug/Kg wet							U
Methylene chloride	ND	2.50	5.00	10.0	ug/Kg wet							U
4-Methyl-2-pentanone	ND	2.50	5.00	10.0	ug/Kg wet							U
Methyl t-Butyl Ether	ND	1.25	2.50	5.00	ug/Kg wet							U
Naphthalene	ND	1.25	2.50	5.00	ug/Kg wet							U
n-Propylbenzene	ND	1.25	2.50	5.00	ug/Kg wet							U
Styrene	ND	1.25	2.50	5.00	ug/Kg wet							U
1,1,2,2-Tetrachloroethane	ND	1.25	2.50	5.00	ug/Kg wet							U
Tetrachloroethene	ND	1.25	2.50	5.00	ug/Kg wet							U
Toluene	ND	1.25	2.50	5.00	ug/Kg wet							U
1,2,3-Trichlorobenzene	ND	1.25	2.50	5.00	ug/Kg wet							U
1,2,4-Trichlorobenzene	ND	1.25	2.50	5.00	ug/Kg wet							U
1,3,5-Trichlorobenzene	ND	1.25	2.50	5.00	ug/Kg wet							U

Volatile Organic Compounds by GC/MS - Quality Control

Analyte	Result	DL	LOD	LOQ	Units	Spike Level	Source Result	%REC	%REC Limits	RPD	RPD Limit	Notes
Batch 7B07001												
Blank					Prepared & Analyzed: 02/07/2017							
1,1,1-Trichloroethane	ND	1.25	2.50	5.00	ug/Kg wet							U
1,1,2-Trichloroethane	ND	1.25	2.50	5.00	ug/Kg wet							U
Trichloroethene	ND	1.25	2.50	5.00	ug/Kg wet							U
Trichlorofluoromethane	ND	2.50	5.00	10.0	ug/Kg wet							U
1,1,2-Trichloro-1,2,2-trifluoroethane	ND	2.50	5.00	10.0	ug/Kg wet							U
Vinyl chloride	ND	1.25	2.50	5.00	ug/Kg wet							U
m,p-Xylene	ND	2.50	5.00	10.0	ug/Kg wet							U
o-Xylene	ND	1.25	2.50	5.00	ug/Kg wet							U
Xylenes (total)	ND	3.75	7.50	15.0	ug/Kg wet							U
Surrogate: Bromofluorobenzene	*27.67*				*ug/Kg wet*	*30.00*		*92.2*	*79-119*			
Surrogate: Dibromofluoromethane	*28.32*				*ug/Kg wet*	*30.00*		*94.4*	*78-119*			
Surrogate: 1,2-Dichloroethane-d4	*29.39*				*ug/Kg wet*	*30.00*		*98.0*	*71-136*			
Surrogate: Toluene-d8	*31.21*				*ug/Kg wet*	*30.00*		*104*	*85-116*			
LCS					Prepared & Analyzed: 02/07/2017							
Acetonitrile	406.1	10.0	25.0	50.0	ug/Kg wet	500.0		81.2	54-143			
Acrolein	216.1	5.00	10.0	20.0	ug/Kg wet	250.0		86.4	47-155			
Acrylonitrile	217.2	5.00	10.0	20.0	ug/Kg wet	250.0		86.9	65-134			
Allyl chloride	50.20	1.25	2.50	5.00	ug/Kg wet	50.00		100	68-135			
Benzene	48.66	1.25	2.50	5.00	ug/Kg wet	50.00		97.3	77-121			
Bromobenzene	50.17	1.25	2.50	5.00	ug/Kg wet	50.00		100	78-121			
Bromochloromethane	48.52	1.25	2.50	5.00	ug/Kg wet	50.00		97.0	78-125			
Bromodichloromethane	49.91	1.25	2.50	5.00	ug/Kg wet	50.00		99.8	75-127			
Bromoform	51.74	1.25	2.50	5.00	ug/Kg wet	50.00		103	67-132			
Bromomethane	55.03	2.50	5.00	10.0	ug/Kg wet	50.00		110	53-143			
2-Butanone	128.3	2.50	5.00	10.0	ug/Kg wet	100.0		128	51-148			
tert-Butyl alcohol	194.9	5.00	10.0	20.0	ug/Kg wet	250.0		78.0	68-133			

Volatile Organic Compounds by GC/MS - Quality Control

Analyte	Result	DL	LOD	LOQ	Units	Spike Level	Source Result	%REC	%REC Limits	RPD	RPD Limit	Notes
Batch 7B07001												
LCS					Prepared & Analyzed: 02/07/2017							
n-Butylbenzene	51.16	1.25	2.50	5.00	ug/Kg wet	50.00		102	70-128			
sec-Butylbenzene	49.89	1.25	2.50	5.00	ug/Kg wet	50.00		99.8	73-126			
tert-Butylbenzene	51.33	1.25	2.50	5.00	ug/Kg wet	50.00		103	73-125			
Carbon disulfide	46.76	1.25	2.50	5.00	ug/Kg wet	50.00		93.5	63-132			
Carbon tetrachloride	49.24	1.25	2.50	5.00	ug/Kg wet	50.00		98.5	70-135			
Chlorobenzene	54.64	1.25	2.50	5.00	ug/Kg wet	50.00		109	79-120			
Chloroethane	48.34	2.50	5.00	10.0	ug/Kg wet	50.00		96.7	59-139			
2-Chloroethyl vinyl ether	145.9	25.0	50.0	100	ug/Kg wet	100.0		146	43-149			
Chloroform	46.17	1.25	2.50	5.00	ug/Kg wet	50.00		92.3	78-123			
1-Chlorohexane	54.04	1.25	2.50	5.00	ug/Kg wet	50.00		108	71-130			
Chloromethane	46.25	2.50	5.00	10.0	ug/Kg wet	50.00		92.5	50-136			
Chloroprene	47.05	1.25	2.50	5.00	ug/Kg wet	50.00		94.1	65-133			
2-Chlorotoluene	49.58	1.25	2.50	5.00	ug/Kg wet	50.00		99.2	75-122			
4-Chlorotoluene	51.48	1.25	2.50	5.00	ug/Kg wet	50.00		103	72-124			
Cyclohexane	48.51	1.25	2.50	5.00	ug/Kg wet	50.00		97.0	67-131			
1,2-Dibromo-3-chloropropane	47.04	2.50	5.00	10.0	ug/Kg wet	50.00		94.1	61-132			
Dibromochloromethane	51.07	1.25	2.50	5.00	ug/Kg wet	50.00		102	74-126			
1,2-Dibromoethane (EDB)	51.44	1.25	2.50	5.00	ug/Kg wet	50.00		103	78-122			
Dibromomethane	48.71	1.25	2.50	5.00	ug/Kg wet	50.00		97.4	78-125			
1,4-Dichloro-2-butene (total)	47.75	2.50	5.00	10.0	ug/Kg wet				43-146			
cis-1,4-Dichloro-2-butene	47.75	1.25	2.50	5.00	ug/Kg wet	50.00		95.5	69-143			
trans-1,4-Dichloro-2-butene	45.58	1.25	2.50	5.00	ug/Kg wet	50.00		91.2	62-136			
1,2-Dichlorobenzene	50.13	1.25	2.50	5.00	ug/Kg wet	50.00		100	78-121			
1,4-Dichlorobenzene	50.90	1.25	2.50	5.00	ug/Kg wet	50.00		102	75-120			
1,3-Dichlorobenzene	51.64	1.25	2.50	5.00	ug/Kg wet	50.00		103	77-121			
Dichlorodifluoromethane	51.37	2.50	5.00	10.0	ug/Kg wet	50.00		103	29-149			

Volatile Organic Compounds by GC/MS - Quality Control

Analyte	Result	DL	LOD	LOQ	Units	Spike Level	Source Result	%REC	%REC Limits	RPD	RPD Limit	Notes
Batch 7B07001												
LCS					Prepared & Analyzed: 02/07/2017							
1,1-Dichloroethane	46.78	1.25	2.50	5.00	ug/Kg wet	50.00		93.6	76-125			
1,2-Dichloroethane	45.98	1.25	2.50	5.00	ug/Kg wet	50.00		92.0	73-128			
1,1-Dichloroethene	49.05	1.25	2.50	5.00	ug/Kg wet	50.00		98.1	70-131			
1,2-Dichloroethene (total)	98.72	2.50	5.00	10.0	ug/Kg wet	100.0		98.7	78-122			
cis-1,2-Dichloroethene	49.72	1.25	2.50	5.00	ug/Kg wet	50.00		99.4	77-123			
trans-1,2-Dichloroethene	49.00	1.25	2.50	5.00	ug/Kg wet	50.00		98.0	74-125			
1,2-Dichloropropane	47.40	1.25	2.50	5.00	ug/Kg wet	50.00		94.8	76-123			
1,3-Dichloropropane	53.04	1.25	2.50	5.00	ug/Kg wet	50.00		106	77-121			
2,2-Dichloropropane	48.95	1.25	2.50	5.00	ug/Kg wet	50.00		97.9	67-133			
1,1-Dichloropropene	46.62	1.25	2.50	5.00	ug/Kg wet	50.00		93.2	76-125			
1,3-Dichloropropene (total)	101.3	2.50	5.00	10.0	ug/Kg wet	100.0		101	77-126			
cis-1,3-Dichloropropene	51.54	1.25	2.50	5.00	ug/Kg wet	50.00		103	74-126			
trans-1,3-Dichloropropene	49.75	1.25	2.50	5.00	ug/Kg wet	50.00		99.5	71-130			
Diethyl ether	45.73	1.25	2.50	5.00	ug/Kg wet	50.00		91.5	71-129			
1,4-Dioxane	866.3	40.0	100	200	ug/Kg wet	1000		86.6	55-138			
Ethylbenzene	53.66	1.25	2.50	5.00	ug/Kg wet	50.00		107	76-122			
Ethyl Methacrylate	51.62	1.25	2.50	5.00	ug/Kg wet	50.00		103	69-129			
Hexachlorobutadiene	45.32	1.25	2.50	5.00	ug/Kg wet	50.00		90.6	61-135			
Hexane	46.52	1.25	2.50	5.00	ug/Kg wet	50.00		93.0	45-142			
2-Hexanone	120.7	2.50	5.00	10.0	ug/Kg wet	100.0		121	53-145			
Iodomethane	45.79	5.00	10.0	20.0	ug/Kg wet	50.00		91.6	71-131			
Isobutyl alcohol	863.1	20.0	40.0	100	ug/Kg wet	1000		86.3	60-135			
Isopropylbenzene	52.08	1.25	2.50	5.00	ug/Kg wet	50.00		104	68-134			
p-Isopropyltoluene	52.07	1.25	2.50	5.00	ug/Kg wet	50.00		104	73-127			
Methacrylonitrile	474.6	10.0	25.0	50.0	ug/Kg wet	500.0		94.9	66-132			
Methyl Acetate	44.44	2.50	5.00	10.0	ug/Kg wet	50.00		88.9	53-144			Y

Volatile Organic Compounds by GC/MS - Quality Control

Analyte	Result	DL	LOD	LOQ	Units	Spike Level	Source Result	%REC	%REC Limits	RPD	RPD Limit	Notes
Batch 7B07001												
LCS					Prepared & Analyzed: 02/07/2017							
Methylcyclohexane	50.83	1.25	2.50	5.00	ug/Kg wet	50.00		102	66-133			
Methylene chloride	44.92	2.50	5.00	10.0	ug/Kg wet	50.00		89.8	70-128			
Methyl Methacrylate	44.71	1.25	2.50	5.00	ug/Kg wet	50.00		89.4	63-134			
4-Methyl-2-pentanone	95.64	2.50	5.00	10.0	ug/Kg wet	100.0		95.6	65-135			
Methyl t-Butyl Ether	47.33	1.25	2.50	5.00	ug/Kg wet	50.00		94.7	73-125			
Naphthalene	44.54	1.25	2.50	5.00	ug/Kg wet	50.00		89.1	62-129			
Propionitrile	434.0	10.0	25.0	50.0	ug/Kg wet	500.0		86.8	68-134			
n-Propylbenzene	51.48	1.25	2.50	5.00	ug/Kg wet	50.00		103	73-125			
Styrene	50.60	1.25	2.50	5.00	ug/Kg wet	50.00		101	76-124			
1,1,1,2-Tetrachloroethane	51.75	1.25	2.50	5.00	ug/Kg wet	50.00		104	78-125			
1,1,2,2-Tetrachloroethane	48.98	1.25	2.50	5.00	ug/Kg wet	50.00		98.0	70-124			
Tetrachloroethene	56.07	1.25	2.50	5.00	ug/Kg wet	50.00		112	73-128			
Tetrahydrofuran	48.36	2.50	5.00	10.0	ug/Kg wet	50.00		96.7	61-135			
Toluene	54.40	1.25	2.50	5.00	ug/Kg wet	50.00		109	77-121			
1,2,3-Trichlorobenzene	46.00	1.25	2.50	5.00	ug/Kg wet	50.00		92.0	66-130			
1,2,4-Trichlorobenzene	46.13	1.25	2.50	5.00	ug/Kg wet	50.00		92.3	67-129			
1,3,5-Trichlorobenzene	48.89	1.25	2.50	5.00	ug/Kg wet	50.00		97.8	71-128			
1,1,1-Trichloroethane	50.11	1.25	2.50	5.00	ug/Kg wet	50.00		100	73-130			
1,1,2-Trichloroethane	50.53	1.25	2.50	5.00	ug/Kg wet	50.00		101	78-121			
Trichloroethene	50.35	1.25	2.50	5.00	ug/Kg wet	50.00		101	77-123			
Trichlorofluoromethane	49.72	2.50	5.00	10.0	ug/Kg wet	50.00		99.4	62-140			
1,2,3-Trichloropropane	50.13	1.25	2.50	5.00	ug/Kg wet	50.00		100	73-125			
1,1,2-Trichloro-1,2,2-trifluoroethane	46.63	2.50	5.00	10.0	ug/Kg wet	50.00		93.3	66-136			
1,2,4-Trimethylbenzene	46.91	1.25	2.50	5.00	ug/Kg wet	50.00		93.8	75-123			
1,3,5-Trimethylbenzene	46.92	1.25	2.50	5.00	ug/Kg wet	50.00		93.8	73-124			
Vinyl acetate	87.99	2.50	5.00	10.0	ug/Kg wet	100.0		88.0	50-151			

Volatile Organic Compounds by GC/MS - Quality Control

Analyte	Result	DL	LOD	LOQ	Units	Spike Level	Source Result	%REC	%REC Limits	RPD	RPD Limit	Notes
Batch 7B07001												
LCS					Prepared & Analyzed: 02/07/2017							
Vinyl chloride	49.45	1.25	2.50	5.00	ug/Kg wet	50.00		98.9	56-135			
m,p-Xylene	109.9	2.50	5.00	10.0	ug/Kg wet	100.0		110	77-124			
o-Xylene	54.04	1.25	2.50	5.00	ug/Kg wet	50.00		108	77-123			
Xylenes (total)	164.0	3.75	7.50	15.0	ug/Kg wet	150.0		109	78-124			
Surrogate: Bromofluorobenzene	*31.43*				*ug/Kg wet*	*30.00*		*105*	*79-119*			
Surrogate: Dibromofluoromethane	*28.90*				*ug/Kg wet*	*30.00*		*96.3*	*78-119*			
Surrogate: 1,2-Dichloroethane-d4	*28.28*				*ug/Kg wet*	*30.00*		*94.3*	*71-136*			
Surrogate: Toluene-d8	*30.61*				*ug/Kg wet*	*30.00*		*102*	*85-116*			
LCS					Prepared & Analyzed: 02/07/2017							
Acetone	70.13	5.00	10.0	20.0	ug/Kg wet	100.0		70.1	36-164			
Surrogate: Bromofluorobenzene	*28.98*				*ug/Kg wet*	*30.00*		*96.6*	*79-119*			
Surrogate: Dibromofluoromethane	*27.70*				*ug/Kg wet*	*30.00*		*92.3*	*78-119*			
Surrogate: 1,2-Dichloroethane-d4	*26.41*				*ug/Kg wet*	*30.00*		*88.0*	*71-136*			
Surrogate: Toluene-d8	*30.81*				*ug/Kg wet*	*30.00*		*103*	*85-116*			

Semivolatile Organic Compounds by GC/MS - Quality Control

Analyte	Result	DL	LOD	LOQ	Units	Spike Level	Source Result	%REC	%REC Limits	RPD	RPD Limit	Notes
Batch 7B06012												
Blank					Prepared: 02/06/2017 Analyzed: 02/07/2017							
Acenaphthene	ND	83.3	167	333	ug/Kg wet							U
Acenaphthylene	ND	83.3	167	333	ug/Kg wet							U
Acetophenone	ND	83.3	167	333	ug/Kg wet							U
Aniline	ND	83.3	167	333	ug/Kg wet							U
Anthracene	ND	83.3	167	333	ug/Kg wet							U
Atrazine	ND	83.3	167	333	ug/Kg wet							U
Benzaldehyde	ND	83.3	167	333	ug/Kg wet							U
Benzidine	ND	83.3	1670	3330	ug/Kg wet							U
Benzo(a)anthracene	ND	83.3	167	333	ug/Kg wet							U
Benzo(a)pyrene	ND	83.3	167	333	ug/Kg wet							U
Benzo(b)fluoranthene	ND	83.3	167	333	ug/Kg wet							U
Benzo(g,h,i)perylene	ND	83.3	167	333	ug/Kg wet							U
Benzoic acid	ND	83.3	667	1330	ug/Kg wet							Q, U
Benzo(k)fluoranthene	ND	83.3	167	333	ug/Kg wet							U
Benzyl alcohol	ND	83.3	167	333	ug/Kg wet							U
1,1-Biphenyl	ND	83.3	167	333	ug/Kg wet							U
4-Bromophenyl-phenylether	ND	83.3	167	333	ug/Kg wet							U
Butylbenzylphthalate	ND	83.3	167	333	ug/Kg wet							U
Caprolactam	ND	83.3	167	333	ug/Kg wet							U
Carbazole	ND	83.3	167	333	ug/Kg wet							U
4-Chloro-3-methylphenol	ND	83.3	167	333	ug/Kg wet							U
4-Chloroaniline	ND	83.3	167	333	ug/Kg wet							U
Bis(2-chloroethoxy)methane	ND	83.3	167	333	ug/Kg wet							U
Bis(2-chloroethyl)ether	ND	83.3	167	333	ug/Kg wet							U
2,2'-Oxybis-1-chloropropane	ND	83.3	167	333	ug/Kg wet							U
2-Chloronaphthalene	ND	83.3	167	333	ug/Kg wet							U

Semivolatile Organic Compounds by GC/MS - Quality Control

Analyte	Result	DL	LOD	LOQ	Units	Spike Level	Source Result	%REC	%REC Limits	RPD	RPD Limit	Notes
Batch 7B06012												
Blank					Prepared: 02/06/2017 Analyzed: 02/07/2017							
2-Chlorophenol	ND	83.3	167	333	ug/Kg wet							U
4-Chlorophenyl phenyl ether	ND	83.3	167	333	ug/Kg wet							U
Chrysene	ND	83.3	167	333	ug/Kg wet							U
Dibenz(a,h)anthracene	ND	83.3	167	333	ug/Kg wet							U
Dibenzofuran	ND	83.3	167	333	ug/Kg wet							U
Di-n-butylphthalate	429	83.3	167	333	ug/Kg wet							
1,4-Dichlorobenzene	ND	83.3	167	333	ug/Kg wet							U
1,3-Dichlorobenzene	ND	83.3	167	333	ug/Kg wet							U
1,2-Dichlorobenzene	ND	83.3	167	333	ug/Kg wet							U
3,3'-Dichlorobenzidine	ND	83.3	167	333	ug/Kg wet							U
2,6-Dichlorophenol	ND	83.3	167	333	ug/Kg wet							U
2,4-Dichlorophenol	ND	83.3	167	333	ug/Kg wet							U
Diethylphthalate	ND	83.3	167	333	ug/Kg wet							U
2,4-Dimethylphenol	ND	333	667	1330	ug/Kg wet							U
Dimethyl phthalate	ND	83.3	167	333	ug/Kg wet							U
4,6-Dinitro-2-methylphenol	ND	833	1670	3330	ug/Kg wet							U
2,4-Dinitrophenol	ND	833	1670	3330	ug/Kg wet							U
2,4-Dinitrotoluene	ND	83.3	167	333	ug/Kg wet							U
2,6-Dinitrotoluene	ND	83.3	167	333	ug/Kg wet							U
Di-n-octylphthalate	ND	83.3	167	333	ug/Kg wet							U
1,4-Dioxane	ND	83.3	167	333	ug/Kg wet							U
1,2-Diphenylhydrazine (as Azobenzene)	ND	83.3	167	333	ug/Kg wet							U
Bis(2-ethylhexyl)phthalate	ND	83.3	167	333	ug/Kg wet							U
Fluoranthene	ND	83.3	167	333	ug/Kg wet							U
Fluorene	ND	83.3	167	333	ug/Kg wet							U
Hexachlorobenzene	ND	83.3	167	333	ug/Kg wet							U

Semivolatile Organic Compounds by GC/MS - Quality Control

Analyte	Result	DL	LOD	LOQ	Units	Spike Level	Source Result	%REC	%REC Limits	RPD	RPD Limit	Notes
Batch 7B06012												
Blank					Prepared: 02/06/2017 Analyzed: 02/07/2017							
Hexachlorobutadiene	ND	83.3	167	333	ug/Kg wet							U
Hexachlorocyclopentadiene	ND	83.3	167	333	ug/Kg wet							U
Hexachloroethane	ND	83.3	167	333	ug/Kg wet							U
Indeno(1,2,3-cd)pyrene	ND	83.3	167	333	ug/Kg wet							U
Isophorone	ND	83.3	167	333	ug/Kg wet							U
1-Methylnaphthalene	ND	83.3	167	333	ug/Kg wet							U
2-Methylnaphthalene	ND	83.3	167	333	ug/Kg wet							U
2-Methylphenol	ND	83.3	167	333	ug/Kg wet							U
3-Methylphenol	ND	83.3	167	333	ug/Kg wet							U
3-Methylphenol/4-Methylphenol	ND	83.3	167	333	ug/Kg wet							U
4-Methylphenol	ND	83.3	167	333	ug/Kg wet							U
Naphthalene	ND	83.3	167	333	ug/Kg wet							U
4-Nitroaniline	ND	333	667	1330	ug/Kg wet							U
3-Nitroaniline	ND	333	667	1330	ug/Kg wet							U
2-Nitroaniline	ND	333	667	1330	ug/Kg wet							U
Nitrobenzene	ND	83.3	167	333	ug/Kg wet							U
4-Nitrophenol	ND	333	667	1330	ug/Kg wet							U
2-Nitrophenol	ND	83.3	167	333	ug/Kg wet							U
N-Nitrosodimethylamine	ND	83.3	167	333	ug/Kg wet							U
N-Nitrosodiphenylamine	ND	83.3	167	333	ug/Kg wet							U
N-Nitroso-di-n-propylamine	ND	83.3	167	333	ug/Kg wet							U
Pentachlorophenol	ND	333	667	1330	ug/Kg wet							U
Phenanthrene	ND	83.3	167	333	ug/Kg wet							U
Phenol	ND	83.3	167	333	ug/Kg wet							U
Pyrene	ND	83.3	167	333	ug/Kg wet							U
1,2,4,5-Tetrachlorobenzene	ND	83.3	167	333	ug/Kg wet							U

Semivolatile Organic Compounds by GC/MS - Quality Control

Analyte	Result	DL	LOD	LOQ	Units	Spike Level	Source Result	%REC	%REC Limits	RPD	RPD Limit	Notes
Batch 7B06012												
Blank					Prepared: 02/06/2017 Analyzed: 02/07/2017							
2,3,4,6-Tetrachlorophenol	ND	83.3	167	333	ug/Kg wet							U
1,2,4-Trichlorobenzene	ND	83.3	167	333	ug/Kg wet							U
2,4,6-Trichlorophenol	ND	83.3	167	333	ug/Kg wet							U
2,4,5-Trichlorophenol	ND	83.3	167	333	ug/Kg wet							U
Surrogate: 2-Fluorobiphenyl	*2039*				*ug/Kg wet*	*3333*		*61.2*	*44-114*			
Surrogate: 2-Fluorophenol	*3960*				*ug/Kg wet*	*6667*		*59.4*	*35-115*			
Surrogate: Nitrobenzene-d5	*1529*				*ug/Kg wet*	*3333*		*45.9*	*37-122*			
Surrogate: Phenol-d6	*3724*				*ug/Kg wet*	*6667*		*55.9*	*33-122*			
Surrogate: Terphenyl-d14	*2148*				*ug/Kg wet*	*3333*		*64.4*	*54-127*			
Surrogate: 2,4,6-Tribromophenol	*3355*				*ug/Kg wet*	*6667*		*50.3*	*39-132*			
LCS					Prepared: 02/06/2017 Analyzed: 02/07/2017							
Acenaphthene	2834	83.3	167	333	ug/Kg wet	3333		85.0	40-123			
Acenaphthylene	2731	83.3	167	333	ug/Kg wet	3333		81.9	32-132			
Acetophenone	1884	83.3	167	333	ug/Kg wet	3333		56.5	33-115			
Aniline	1828	83.3	167	333	ug/Kg wet	3333		54.8	36-110			
Anthracene	2293	83.3	167	333	ug/Kg wet	3333		68.8	47-123			
Atrazine	2007	83.3	167	333	ug/Kg wet	3333		60.2	47-127			
Benzaldehyde	2057	83.3	167	333	ug/Kg wet	3333		61.7	55-110			
Benzidine	866.3	83.3	1670	3330	ug/Kg wet	3333		26.0	0-110			J
Benzo(a)anthracene	2509	83.3	167	333	ug/Kg wet	3333		75.3	49-126			
Benzo(a)pyrene	2267	83.3	167	333	ug/Kg wet	3333		68.0	45-129			
Benzo(b)fluoranthene	2318	83.3	167	333	ug/Kg wet	3333		69.5	45-132			
Benzo(g,h,i)perylene	2443	83.3	167	333	ug/Kg wet	3333		73.3	43-134			
Benzoic acid	2013	83.3	667	1330	ug/Kg wet	6667		30.2	41-136			
Benzo(k)fluoranthene	2350	83.3	167	333	ug/Kg wet	3333		70.5	47-132			
Benzyl alcohol	2095	83.3	167	333	ug/Kg wet	3333		62.9	29-122			

Semivolatile Organic Compounds by GC/MS - Quality Control

Analyte	Result	DL	LOD	LOQ	Units	Spike Level	Source Result	%REC	%REC Limits	RPD	RPD Limit	Notes
Batch 7B06012												
LCS					Prepared: 02/06/2017 Analyzed: 02/07/2017							
1,1-Biphenyl	2718	83.3	167	333	ug/Kg wet	3333		81.5	40-117			
4-Bromophenyl-phenylether	2145	83.3	167	333	ug/Kg wet	3333		64.4	46-124			
Butylbenzylphthalate	2742	83.3	167	333	ug/Kg wet	3333		82.3	48-132			
Caprolactam	2073	83.3	167	333	ug/Kg wet	3333		62.2	46-117			
Carbazole	2440	83.3	167	333	ug/Kg wet	3333		73.2	50-123			
4-Chloro-3-methylphenol	3766	83.3	167	333	ug/Kg wet	6667		56.5	45-122			
4-Chloroaniline	2032	83.3	167	333	ug/Kg wet	3333		61.0	17-106			
Bis(2-chloroethoxy)methane	1995	83.3	167	333	ug/Kg wet	3333		59.9	36-121			
Bis(2-chloroethyl)ether	1956	83.3	167	333	ug/Kg wet	3333		58.7	31-120			
2,2'-Oxybis-1-chloropropane	1991	83.3	167	333	ug/Kg wet	3333		59.7	33-131			
2-Chloronaphthalene	2609	83.3	167	333	ug/Kg wet	3333		78.3	41-114			
2-Chlorophenol	4517	83.3	167	333	ug/Kg wet	6667		67.8	34-121			
4-Chlorophenyl phenyl ether	2528	83.3	167	333	ug/Kg wet	3333		75.8	45-121			
Chrysene	2601	83.3	167	333	ug/Kg wet	3333		78.0	50-124			
Dibenz(a,h)anthracene	2432	83.3	167	333	ug/Kg wet	3333		73.0	45-134			
Dibenzofuran	2592	83.3	167	333	ug/Kg wet	3333		77.8	44-120			
Di-n-butylphthalate	2935	83.3	167	333	ug/Kg wet	3333		88.1	51-128			B
1,4-Dichlorobenzene	1950	83.3	167	333	ug/Kg wet	3333		58.5	31-115			
1,3-Dichlorobenzene	1959	83.3	167	333	ug/Kg wet	3333		58.8	30-115			
1,2-Dichlorobenzene	1975	83.3	167	333	ug/Kg wet	3333		59.3	33-117			
3,3'-Dichlorobenzidine	1772	83.3	167	333	ug/Kg wet	3333		53.2	22-121			
2,6-Dichlorophenol	1970	83.3	167	333	ug/Kg wet	3333		59.1	41-117			
2,4-Dichlorophenol	4162	83.3	167	333	ug/Kg wet	6667		62.4	40-122			
Diethylphthalate	2719	83.3	167	333	ug/Kg wet	3333		81.6	50-124			
2,4-Dimethylphenol	3926	333	667	1330	ug/Kg wet	6667		58.9	30-127			
Dimethyl phthalate	2598	83.3	167	333	ug/Kg wet	3333		77.9	48-124			

Semivolatile Organic Compounds by GC/MS - Quality Control

Analyte	Result	DL	LOD	LOQ	Units	Spike Level	Source Result	%REC	%REC Limits	RPD	RPD Limit	Notes
Batch 7B06012												
LCS					Prepared: 02/06/2017 Analyzed: 02/07/2017							
4,6-Dinitro-2-methylphenol	4420	833	1670	3330	ug/Kg wet	6667		66.3	29-132			
2,4-Dinitrophenol	5572	833	1670	3330	ug/Kg wet	6667		83.6	48-113			
2,4-Dinitrotoluene	2514	83.3	167	333	ug/Kg wet	3333		75.4	48-126			
2,6-Dinitrotoluene	2444	83.3	167	333	ug/Kg wet	3333		73.3	46-124			
Di-n-octylphthalate	2659	83.3	167	333	ug/Kg wet	3333		79.8	45-140			
1,4-Dioxane	1751	83.3	167	333	ug/Kg wet	3333		52.5	43-110			
1,2-Diphenylhydrazine (as Azobenzene)	2077	83.3	167	333	ug/Kg wet	3333		62.3	41-125			
Bis(2-ethylhexyl)phthalate	2827	83.3	167	333	ug/Kg wet	3333		84.8	51-133			
Fluoranthene	2265	83.3	167	333	ug/Kg wet	3333		67.9	50-127			
Fluorene	2657	83.3	167	333	ug/Kg wet	3333		79.7	43-125			
Hexachlorobenzene	2171	83.3	167	333	ug/Kg wet	3333		65.1	45-122			
Hexachlorobutadiene	1975	83.3	167	333	ug/Kg wet	3333		59.2	32-123			
Hexachlorocyclopentadiene	2802	83.3	167	333	ug/Kg wet	3333		84.0	42-110			
Hexachloroethane	1851	83.3	167	333	ug/Kg wet	3333		55.5	28-117			
Indeno(1,2,3-cd)pyrene	2325	83.3	167	333	ug/Kg wet	3333		69.7	45-133			
Isophorone	1895	83.3	167	333	ug/Kg wet	3333		56.9	30-122			
1-Methylnaphthalene	1988	83.3	167	333	ug/Kg wet	3333		59.6	40-119			
2-Methylnaphthalene	2102	83.3	167	333	ug/Kg wet	3333		63.1	38-122			
2-Methylphenol	4246	83.3	167	333	ug/Kg wet	6667		63.7	32-122			
3-Methylphenol/4-Methylphenol	4150	83.3	167	333	ug/Kg wet	6667		62.3	34-119			
3-Methylphenol	4155	83.3	167	333	ug/Kg wet	6667		62.3	34-119			
4-Methylphenol	4152	83.3	167	333	ug/Kg wet	6667		62.3	42-126			
Naphthalene	2143	83.3	167	333	ug/Kg wet	3333		64.3	35-123			
4-Nitroaniline	2921	333	667	1330	ug/Kg wet	3333		87.6	73-112			
3-Nitroaniline	2562	333	667	1330	ug/Kg wet	3333		76.9	33-119			
2-Nitroaniline	2374	333	667	1330	ug/Kg wet	3333		71.2	44-127			

Semivolatile Organic Compounds by GC/MS - Quality Control

Analyte	Result	DL	LOD	LOQ	Units	Spike Level	Source Result	%REC	%REC Limits	RPD	RPD Limit	Notes
Batch 7B06012												
LCS					Prepared: 02/06/2017 Analyzed: 02/07/2017							
Nitrobenzene	1737	83.3	167	333	ug/Kg wet	3333		52.1	34-122			
4-Nitrophenol	4524	333	667	1330	ug/Kg wet	6667		67.9	30-132			
2-Nitrophenol	4297	83.3	167	333	ug/Kg wet	6667		64.5	36-123			
N-Nitrosodimethylamine	1945	83.3	167	333	ug/Kg wet	3333		58.3	23-120			
N-Nitrosodiphenylamine	1904	83.3	167	333	ug/Kg wet	3333		57.1	38-127			
N-Nitroso-di-n-propylamine	1829	83.3	167	333	ug/Kg wet	3333		54.9	36-120			
Pentachlorophenol	5080	333	667	1330	ug/Kg wet	6667		76.2	25-133			
Phenanthrene	2335	83.3	167	333	ug/Kg wet	3333		70.1	50-121			
Phenol	3668	83.3	167	333	ug/Kg wet	6667		55.0	34-121			
Pyrene	2505	83.3	167	333	ug/Kg wet	3333		75.1	47-127			
1,2,4,5-Tetrachlorobenzene	1849	83.3	167	333	ug/Kg wet	3333		55.5	37-119			
2,3,4,6-Tetrachlorophenol	2121	83.3	167	333	ug/Kg wet	3333		63.6	44-125			
1,2,4-Trichlorobenzene	1980	83.3	167	333	ug/Kg wet	3333		59.4	34-118			
2,4,6-Trichlorophenol	5019	83.3	167	333	ug/Kg wet	6667		75.3	39-126			
2,4,5-Trichlorophenol	5219	83.3	167	333	ug/Kg wet	6667		78.3	41-124			
Surrogate: 2-Fluorobiphenyl	*2323*				*ug/Kg wet*	*3333*		*69.7*	*44-114*			
Surrogate: 2-Fluorophenol	*4537*				*ug/Kg wet*	*6667*		*68.0*	*35-115*			
Surrogate: Nitrobenzene-d5	*1716*				*ug/Kg wet*	*3333*		*51.5*	*37-122*			
Surrogate: Phenol-d6	*4232*				*ug/Kg wet*	*6667*		*63.5*	*33-122*			
Surrogate: Terphenyl-d14	*2397*				*ug/Kg wet*	*3333*		*71.9*	*54-127*			
Surrogate: 2,4,6-Tribromophenol	*4095*				*ug/Kg wet*	*6667*		*61.4*	*39-132*			
Matrix Spike	**Source: 1702005-01**				Prepared: 02/06/2017 Analyzed: 02/07/2017							
Acenaphthene	3674	101	203	404	ug/Kg dry	4044	ND	90.8	40-123			
Acenaphthylene	3520	101	203	404	ug/Kg dry	4044	ND	87.0	32-132			
Acetophenone	2424	101	203	404	ug/Kg dry	4044	ND	59.9	33-115			
Aniline	2232	101	203	404	ug/Kg dry	4044	ND	55.2	36-110			

Semivolatile Organic Compounds by GC/MS - Quality Control

Analyte	Result	DL	LOD	LOQ	Units	Spike Level	Source Result	%REC	%REC Limits	RPD	RPD Limit	Notes
Batch 7B06012												
Matrix Spike	**Source: 1702005-01**		Prepared: 02/06/2017 Analyzed: 02/07/2017									
Anthracene	3072	101	203	404	ug/Kg dry	4044	ND	76.0	47-123			
Atrazine	2576	101	203	404	ug/Kg dry	4044	ND	63.7	47-127			
Benzaldehyde	2684	101	203	404	ug/Kg dry	4044	ND	66.4	55-110			
Benzidine	ND	101	2030	4040	ug/Kg dry	4044	ND		0-110			U
Benzo(a)anthracene	3369	101	203	404	ug/Kg dry	4044	ND	83.3	49-126			
Benzo(a)pyrene	3042	101	203	404	ug/Kg dry	4044	ND	75.2	45-129			
Benzo(b)fluoranthene	3137	101	203	404	ug/Kg dry	4044	ND	77.6	45-132			
Benzo(g,h,i)perylene	3238	101	203	404	ug/Kg dry	4044	ND	80.1	43-134			
Benzoic acid	505.9	101	809	1610	ug/Kg dry	8089	ND	6.25	41-136			Q, J
Benzo(k)fluoranthene	3185	101	203	404	ug/Kg dry	4044	ND	78.8	47-132			
Benzyl alcohol	2655	101	203	404	ug/Kg dry	4044	ND	65.6	29-122			
1,1-Biphenyl	3494	101	203	404	ug/Kg dry	4044	ND	86.4	40-117			
4-Bromophenyl-phenylether	2880	101	203	404	ug/Kg dry	4044	ND	71.2	46-124			
Butylbenzylphthalate	3756	101	203	404	ug/Kg dry	4044	ND	92.9	48-132			
Caprolactam	2811	101	203	404	ug/Kg dry	4044	ND	69.5	46-117			
Carbazole	2223	101	203	404	ug/Kg dry	4044	ND	55.0	50-123			
4-Chloro-3-methylphenol	4873	101	203	404	ug/Kg dry	8089	ND	60.2	45-122			
4-Chloroaniline	2443	101	203	404	ug/Kg dry	4044	ND	60.4	17-106			
Bis(2-chloroethoxy)methane	2548	101	203	404	ug/Kg dry	4044	ND	63.0	36-121			
Bis(2-chloroethyl)ether	2520	101	203	404	ug/Kg dry	4044	ND	62.3	31-120			
2,2'-Oxybis-1-chloropropane	2542	101	203	404	ug/Kg dry	4044	ND	62.8	33-131			
2-Chloronaphthalene	3299	101	203	404	ug/Kg dry	4044	ND	81.6	41-114			
2-Chlorophenol	5560	101	203	404	ug/Kg dry	8089	ND	68.7	34-121			
4-Chlorophenyl phenyl ether	3285	101	203	404	ug/Kg dry	4044	ND	81.2	45-121			
Chrysene	3548	101	203	404	ug/Kg dry	4044	ND	87.7	50-124			
Dibenz(a,h)anthracene	3236	101	203	404	ug/Kg dry	4044	ND	80.0	45-134			

Semivolatile Organic Compounds by GC/MS - Quality Control

Analyte	Result	DL	LOD	LOQ	Units	Spike Level	Source Result	%REC	%REC Limits	RPD	RPD Limit	Notes
Batch 7B06012												
Matrix Spike	**Source: 1702005-01**	Prepared: 02/06/2017 Analyzed: 02/07/2017										
Dibenzofuran	3348	101	203	404	ug/Kg dry	4044	ND	82.8	44-120			
Di-n-butylphthalate	3865	101	203	404	ug/Kg dry	4044	375.9	86.3	51-128			B
1,4-Dichlorobenzene	2468	101	203	404	ug/Kg dry	4044	ND	61.0	31-115			
1,3-Dichlorobenzene	2481	101	203	404	ug/Kg dry	4044	ND	61.3	30-115			
1,2-Dichlorobenzene	2489	101	203	404	ug/Kg dry	4044	ND	61.5	33-117			
3,3'-Dichlorobenzidine	985.7	101	203	404	ug/Kg dry	4044	ND	24.4	22-121			
2,6-Dichlorophenol	2531	101	203	404	ug/Kg dry	4044	ND	62.6	41-117			
2,4-Dichlorophenol	5395	101	203	404	ug/Kg dry	8089	ND	66.7	40-122			
Diethylphthalate	3544	101	203	404	ug/Kg dry	4044	ND	87.6	50-124			
2,4-Dimethylphenol	4869	404	809	1610	ug/Kg dry	8089	ND	60.2	30-127			
Dimethyl phthalate	3312	101	203	404	ug/Kg dry	4044	ND	81.9	48-124			
4,6-Dinitro-2-methylphenol	4913	1010	2030	4040	ug/Kg dry	8089	ND	60.7	29-132			
2,4-Dinitrophenol	3751	1010	2030	4040	ug/Kg dry	8089	ND	46.4	48-113			J
2,4-Dinitrotoluene	3303	101	203	404	ug/Kg dry	4044	ND	81.7	48-126			
2,6-Dinitrotoluene	3216	101	203	404	ug/Kg dry	4044	ND	79.5	46-124			
Di-n-octylphthalate	3594	101	203	404	ug/Kg dry	4044	ND	88.9	45-140			
1,4-Dioxane	2076	101	203	404	ug/Kg dry	4044	ND	51.3	43-110			
1,2-Diphenylhydrazine (as Azobenzene)	2721	101	203	404	ug/Kg dry	4044	ND	67.3	41-125			
Bis(2-ethylhexyl)phthalate	3941	101	203	404	ug/Kg dry	4044	186.3	92.8	51-133			
Fluoranthene	3075	101	203	404	ug/Kg dry	4044	ND	76.0	50-127			
Fluorene	3383	101	203	404	ug/Kg dry	4044	ND	83.7	43-125			
Hexachlorobenzene	2911	101	203	404	ug/Kg dry	4044	ND	72.0	45-122			
Hexachlorobutadiene	2495	101	203	404	ug/Kg dry	4044	ND	61.7	32-123			
Hexachlorocyclopentadiene	3427	101	203	404	ug/Kg dry	4044	ND	84.7	42-110			
Hexachloroethane	2310	101	203	404	ug/Kg dry	4044	ND	57.1	28-117			
Indeno(1,2,3-cd)pyrene	3065	101	203	404	ug/Kg dry	4044	ND	75.8	45-133			

Semivolatile Organic Compounds by GC/MS - Quality Control

Analyte	Result	DL	LOD	LOQ	Units	Spike Level	Source Result	%REC	%REC Limits	RPD	RPD Limit	Notes
Batch 7B06012												
Matrix Spike	**Source: 1702005-01**		Prepared: 02/06/2017 Analyzed: 02/07/2017									
Isophorone	2473	101	203	404	ug/Kg dry	4044	ND	61.1	30-122			
1-Methylnaphthalene	2554	101	203	404	ug/Kg dry	4044	ND	63.1	40-119			
2-Methylnaphthalene	2690	101	203	404	ug/Kg dry	4044	ND	66.5	38-122			
2-Methylphenol	5414	101	203	404	ug/Kg dry	8089	ND	66.9	32-122			
3-Methylphenol	5283	101	203	404	ug/Kg dry	8089	ND	65.3	34-119			
3-Methylphenol/4-Methylphenol	5277	101	203	404	ug/Kg dry	8089	ND	65.2	34-119			
4-Methylphenol	5279	101	203	404	ug/Kg dry	8089	ND	65.3	42-126			
Naphthalene	2722	101	203	404	ug/Kg dry	4044	ND	67.3	35-123			
4-Nitroaniline	2590	404	809	1610	ug/Kg dry	4044	ND	64.0	73-112			
3-Nitroaniline	2241	404	809	1610	ug/Kg dry	4044	ND	55.4	33-119			
2-Nitroaniline	3118	404	809	1610	ug/Kg dry	4044	ND	77.1	44-127			
Nitrobenzene	2238	101	203	404	ug/Kg dry	4044	ND	55.3	34-122			
4-Nitrophenol	5778	404	809	1610	ug/Kg dry	8089	ND	71.4	30-132			
2-Nitrophenol	5596	101	203	404	ug/Kg dry	8089	ND	69.2	36-123			
N-Nitrosodimethylamine	2468	101	203	404	ug/Kg dry	4044	ND	61.0	23-120			
N-Nitrosodiphenylamine	2486	101	203	404	ug/Kg dry	4044	ND	61.5	38-127			
N-Nitroso-di-n-propylamine	2322	101	203	404	ug/Kg dry	4044	ND	57.4	36-120			
Pentachlorophenol	6165	404	809	1610	ug/Kg dry	8089	ND	76.2	25-133			
Phenanthrene	3134	101	203	404	ug/Kg dry	4044	ND	77.5	50-121			
Phenol	4608	101	203	404	ug/Kg dry	8089	ND	57.0	34-121			
Pyrene	3412	101	203	404	ug/Kg dry	4044	ND	84.4	47-127			
1,2,4,5-Tetrachlorobenzene	2355	101	203	404	ug/Kg dry	4044	ND	58.2	37-119			
2,3,4,6-Tetrachlorophenol	2765	101	203	404	ug/Kg dry	4044	ND	68.4	44-125			
1,2,4-Trichlorobenzene	2528	101	203	404	ug/Kg dry	4044	ND	62.5	34-118			
2,4,6-Trichlorophenol	6433	101	203	404	ug/Kg dry	8089	ND	79.5	39-126			
2,4,5-Trichlorophenol	6869	101	203	404	ug/Kg dry	8089	ND	84.9	41-124			

Semivolatile Organic Compounds by GC/MS - Quality Control

Analyte	Result	DL	LOD	LOQ	Units	Spike Level	Source Result	%REC	%REC Limits	RPD	RPD Limit	Notes
Batch 7B06012												
Matrix Spike	**Source: 1702005-01**				Prepared: 02/06/2017 Analyzed: 02/07/2017							
Surrogate: 2-Fluorobiphenyl	*2969*				*ug/Kg dry*	*4044*		*73.4*	*44-114*			
Surrogate: 2-Fluorophenol	*5695*				*ug/Kg dry*	*8089*		*70.4*	*35-115*			
Surrogate: Nitrobenzene-d5	*2232*				*ug/Kg dry*	*4044*		*55.2*	*37-122*			
Surrogate: Phenol-d6	*5408*				*ug/Kg dry*	*8089*		*66.9*	*33-122*			
Surrogate: Terphenyl-d14	*3292*				*ug/Kg dry*	*4044*		*81.4*	*54-127*			
Surrogate: 2,4,6-Tribromophenol	*5485*				*ug/Kg dry*	*8089*		*67.8*	*39-132*			
Matrix Spike Dup	**Source: 1702005-01**				Prepared: 02/06/2017 Analyzed: 02/07/2017							
Acenaphthene	3632	101	202	402	ug/Kg dry	4026	ND	90.2	40-123	1.16	20	
Acenaphthylene	3594	101	202	402	ug/Kg dry	4026	ND	89.3	32-132	2.09	20	
Acetophenone	2401	101	202	402	ug/Kg dry	4026	ND	59.6	33-115	0.973	20	
Aniline	2030	101	202	402	ug/Kg dry	4026	ND	50.4	36-110	9.49	20	
Anthracene	3059	101	202	402	ug/Kg dry	4026	ND	76.0	47-123	0.437	20	
Atrazine	2414	101	202	402	ug/Kg dry	4026	ND	60.0	47-127	6.51	20	
Benzaldehyde	2682	101	202	402	ug/Kg dry	4026	ND	66.6	55-110	0.0701	20	
Benzidine	ND	101	2020	4020	ug/Kg dry	4026	ND		0-110		20	U
Benzo(a)anthracene	3303	101	202	402	ug/Kg dry	4026	ND	82.1	49-126	1.96	20	
Benzo(a)pyrene	3028	101	202	402	ug/Kg dry	4026	ND	75.2	45-129	0.486	20	
Benzo(b)fluoranthene	3145	101	202	402	ug/Kg dry	4026	ND	78.1	45-132	0.242	20	
Benzo(g,h,i)perylene	3193	101	202	402	ug/Kg dry	4026	ND	79.3	43-134	1.39	20	
Benzoic acid	483.5	101	806	1610	ug/Kg dry	8051	ND	6.01	41-136	4.51	20	Q, J
Benzo(k)fluoranthene	3121	101	202	402	ug/Kg dry	4026	ND	77.5	47-132	2.02	20	
Benzyl alcohol	2648	101	202	402	ug/Kg dry	4026	ND	65.8	29-122	0.253	20	
1,1-Biphenyl	3505	101	202	402	ug/Kg dry	4026	ND	87.1	40-117	0.329	20	
4-Bromophenyl-phenylether	2817	101	202	402	ug/Kg dry	4026	ND	70.0	46-124	2.20	20	
Butylbenzylphthalate	3654	101	202	402	ug/Kg dry	4026	ND	90.8	48-132	2.74	20	
Caprolactam	2717	101	202	402	ug/Kg dry	4026	ND	67.5	46-117	3.40	20	
Carbazole	1559	101	202	402	ug/Kg dry	4026	ND	38.7	50-123	35.1	20	
4-Chloro-3-methylphenol	4940	101	202	402	ug/Kg dry	8051	ND	61.4	45-122	1.37	20	
4-Chloroaniline	1836	101	202	402	ug/Kg dry	4026	ND	45.6	17-106	28.4	20	

Semivolatile Organic Compounds by GC/MS - Quality Control

Analyte	Result	DL	LOD	LOQ	Units	Spike Level	Source Result	%REC	%REC Limits	RPD	RPD Limit	Notes
Batch 7B06012												
Matrix Spike Dup	**Source: 1702005-01**		Prepared: 02/06/2017 Analyzed: 02/07/2017									
Bis(2-chloroethoxy)methane	2567	101	202	402	ug/Kg dry	4026	ND	63.8	36-121	0.763	20	
Bis(2-chloroethyl)ether	2553	101	202	402	ug/Kg dry	4026	ND	63.4	31-120	1.31	20	
2,2'-Oxybis-1-chloropropane	2547	101	202	402	ug/Kg dry	4026	ND	63.3	33-131	0.194	20	
2-Chloronaphthalene	3344	101	202	402	ug/Kg dry	4026	ND	83.1	41-114	1.35	20	
2-Chlorophenol	5738	101	202	402	ug/Kg dry	8051	ND	71.3	34-121	3.15	20	
4-Chlorophenyl phenyl ether	3329	101	202	402	ug/Kg dry	4026	ND	82.7	45-121	1.33	20	
Chrysene	3458	101	202	402	ug/Kg dry	4026	ND	85.9	50-124	2.57	20	
Dibenz(a,h)anthracene	3196	101	202	402	ug/Kg dry	4026	ND	79.4	45-134	1.27	20	
Dibenzofuran	3351	101	202	402	ug/Kg dry	4026	ND	83.2	44-120	0.0915	20	
Di-n-butylphthalate	3783	101	202	402	ug/Kg dry	4026	375.9	84.6	51-128	2.13	20	B
1,4-Dichlorobenzene	2482	101	202	402	ug/Kg dry	4026	ND	61.6	31-115	0.568	20	
1,3-Dichlorobenzene	2492	101	202	402	ug/Kg dry	4026	ND	61.9	30-115	0.459	20	
1,2-Dichlorobenzene	2539	101	202	402	ug/Kg dry	4026	ND	63.1	33-117	2.00	20	
3,3'-Dichlorobenzidine	950.4	101	202	402	ug/Kg dry	4026	ND	23.6	22-121	3.64	20	
2,6-Dichlorophenol	2542	101	202	402	ug/Kg dry	4026	ND	63.1	41-117	0.418	20	
2,4-Dichlorophenol	5283	101	202	402	ug/Kg dry	8051	ND	65.6	40-122	2.10	20	
Diethylphthalate	3549	101	202	402	ug/Kg dry	4026	ND	88.2	50-124	0.129	20	
2,4-Dimethylphenol	4916	402	806	1610	ug/Kg dry	8051	ND	61.1	30-127	0.971	20	
Dimethyl phthalate	3362	101	202	402	ug/Kg dry	4026	ND	83.5	48-124	1.50	20	
4,6-Dinitro-2-methylphenol	4365	1010	2020	4020	ug/Kg dry	8051	ND	54.2	29-132	11.8	20	
2,4-Dinitrophenol	2111	1010	2020	4020	ug/Kg dry	8051	ND	26.2	48-113	56.0	20	J
2,4-Dinitrotoluene	3348	101	202	402	ug/Kg dry	4026	ND	83.2	48-126	1.37	20	
2,6-Dinitrotoluene	3246	101	202	402	ug/Kg dry	4026	ND	80.6	46-124	0.936	20	
Di-n-octylphthalate	3581	101	202	402	ug/Kg dry	4026	ND	89.0	45-140	0.375	20	
1,4-Dioxane	2033	101	202	402	ug/Kg dry	4026	ND	50.5	43-110	2.07	20	
1,2-Diphenylhydrazine (as Azobenzene)	2675	101	202	402	ug/Kg dry	4026	ND	66.4	41-125	1.73	20	

Semivolatile Organic Compounds by GC/MS - Quality Control

Analyte	Result	DL	LOD	LOQ	Units	Spike Level	Source Result	%REC	%REC Limits	RPD	RPD Limit	Notes
Batch 7B06012												
Matrix Spike Dup	**Source: 1702005-01**		Prepared: 02/06/2017 Analyzed: 02/07/2017									
Bis(2-ethylhexyl)phthalate	3902	101	202	402	ug/Kg dry	4026	186.3	92.3	51-133	0.984	20	
Fluoranthene	3022	101	202	402	ug/Kg dry	4026	ND	75.1	50-127	1.74	20	
Fluorene	3441	101	202	402	ug/Kg dry	4026	ND	85.5	43-125	1.69	20	
Hexachlorobenzene	2861	101	202	402	ug/Kg dry	4026	ND	71.1	45-122	1.71	20	
Hexachlorobutadiene	2569	101	202	402	ug/Kg dry	4026	ND	63.8	32-123	2.90	20	
Hexachlorocyclopentadiene	3491	101	202	402	ug/Kg dry	4026	ND	86.7	42-110	1.87	20	
Hexachloroethane	2365	101	202	402	ug/Kg dry	4026	ND	58.7	28-117	2.32	20	
Indeno(1,2,3-cd)pyrene	3032	101	202	402	ug/Kg dry	4026	ND	75.3	45-133	1.09	20	
Isophorone	2453	101	202	402	ug/Kg dry	4026	ND	60.9	30-122	0.825	20	
1-Methylnaphthalene	2582	101	202	402	ug/Kg dry	4026	ND	64.1	40-119	1.08	20	
2-Methylnaphthalene	2758	101	202	402	ug/Kg dry	4026	ND	68.5	38-122	2.51	20	
2-Methylphenol	5480	101	202	402	ug/Kg dry	8051	ND	68.1	32-122	1.21	20	
3-Methylphenol/4-Methylphenol	5265	101	202	402	ug/Kg dry	8051	ND	65.4	34-119	0.227	20	
3-Methylphenol	5271	101	202	402	ug/Kg dry	8051	ND	65.5	34-119	0.227	30	
4-Methylphenol	5267	101	202	402	ug/Kg dry	8051	ND	65.4	42-126	0.227	30	
Naphthalene	2774	101	202	402	ug/Kg dry	4026	ND	68.9	35-123	1.88	20	
4-Nitroaniline	2166	402	806	1610	ug/Kg dry	4026	ND	53.8	73-112	17.9	20	
3-Nitroaniline	954.8	402	806	1610	ug/Kg dry	4026	ND	23.7	33-119	80.5	20	J
2-Nitroaniline	3123	402	806	1610	ug/Kg dry	4026	ND	77.6	44-127	0.180	20	
Nitrobenzene	2250	101	202	402	ug/Kg dry	4026	ND	55.9	34-122	0.495	20	
4-Nitrophenol	5749	402	806	1610	ug/Kg dry	8051	ND	71.4	30-132	0.500	20	
2-Nitrophenol	6336	101	202	402	ug/Kg dry	8051	ND	78.7	36-123	12.4	20	
N-Nitrosodimethylamine	2416	101	202	402	ug/Kg dry	4026	ND	60.0	23-120	2.10	20	
N-Nitrosodiphenylamine	2144	101	202	402	ug/Kg dry	4026	ND	53.3	38-127	14.8	20	
N-Nitroso-di-n-propylamine	2323	101	202	402	ug/Kg dry	4026	ND	57.7	36-120	0.0426	20	
Pentachlorophenol	5402	402	806	1610	ug/Kg dry	8051	ND	67.1	25-133	13.2	20	

Semivolatile Organic Compounds by GC/MS - Quality Control

Analyte	Result	DL	LOD	LOQ	Units	Spike Level	Source Result	%REC	%REC Limits	RPD	RPD Limit	Notes
Batch 7B06012												
Matrix Spike Dup	**Source: 1702005-01**		Prepared: 02/06/2017 Analyzed: 02/07/2017									
Phenanthrene	3043	101	202	402	ug/Kg dry	4026	ND	75.6	50-121	2.95	20	
Phenol	4580	101	202	402	ug/Kg dry	8051	ND	56.9	34-121	0.606	20	
Pyrene	3336	101	202	402	ug/Kg dry	4026	ND	82.9	47-127	2.26	20	
1,2,4,5-Tetrachlorobenzene	2382	101	202	402	ug/Kg dry	4026	ND	59.2	37-119	1.17	20	
2,3,4,6-Tetrachlorophenol	2710	101	202	402	ug/Kg dry	4026	ND	67.3	44-125	1.99	20	
1,2,4-Trichlorobenzene	2533	101	202	402	ug/Kg dry	4026	ND	62.9	34-118	0.208	20	
2,4,6-Trichlorophenol	6392	101	202	402	ug/Kg dry	8051	ND	79.4	39-126	0.637	20	
2,4,5-Trichlorophenol	6842	101	202	402	ug/Kg dry	8051	ND	85.0	41-124	0.397	20	
Surrogate: 2-Fluorobiphenyl	*3017*				*ug/Kg dry*	*4026*		*74.9*	*44-114*			
Surrogate: 2-Fluorophenol	*5646*				*ug/Kg dry*	*8051*		*70.1*	*35-115*			
Surrogate: Nitrobenzene-d5	*2225*				*ug/Kg dry*	*4026*		*55.3*	*37-122*			
Surrogate: Phenol-d6	*5412*				*ug/Kg dry*	*8051*		*67.2*	*33-122*			
Surrogate: Terphenyl-d14	*3234*				*ug/Kg dry*	*4026*		*80.3*	*54-127*			
Surrogate: 2,4,6-Tribromophenol	*5469*				*ug/Kg dry*	*8051*		*67.9*	*39-132*			

1702005-01 A

Shaw Environmental and Infrastructure Inc., a CB&I Co.

CHAIN OF CUSTODY

Reference Document # 500433EDBPT-SoilSpill

106MW2 Soil Investigation

Project Manager: Kathleen Romalia

Send Report To: Susan Huang
Phone Number: 925-288-2099
Address: 4005 Port Chicago Hwy
City: Concord, CA 94520
susan.huang@cbifederalservices.com

Sampler's Name(s): C. LaChance

Project Number: 500433
Project Name / Location: KAFB RAPID Response ESTCP
Purchase Order #: ~~203198~~ P-Card
Shipment Date: 1/31/17
UPS Number: 1Z66V69001909092 87

Lab Destination: Empirical
Mon-Sat DELIVERY
621 Mainstream Drive, Suite 270
Nashville, TN 37228
Lab Contact Name: Marianne Walker
Phone #: 615.345.1115

Requested Analyses

Sample ID Number	Location	Date	Time	Method	Matrix	# of containers	Preservative / Container	VOCs (SW8260)	EDB (SW8260)	SVOCs (SW8270)	Metals (Fe, Mn, Pb) (SW6010)				
							Preservative	Ice							
							Container	4 oz jar/Encore		4 oz jar	4 oz jar				
106MW2-Rolloff	KAFB-106MW2, R/O# 9901	1/31/17	1445	G	SO	2	--	X	X	X	X				01
106MW2-Confirm	Confirmation, Inside Spill Area	1/31/17	1435	G	SO	4	--	X	X	X	X				02
106MW2-Background	Background Location	1/31/17	1455	G	SO	4	--	X	X	X	X				03
				CQL											
				1/31/17											

Turnaround Time: 5 Day ☐ 24-hr ☐ 48-hr
All Methods ☐ 3-day

Level Of QC Required: I II (III) IV
Project Specific: unless IV requested

Relinquished By: [signature] Date: 1/31/17 Time: 1700
Received By: [signature] Date: Time:
Relinquished By: Date: Time:
Received By: [signature] Date: 2/1/17 Time: 930

II. EMPIRICAL LABORATORIES
COOLER RECEIPT FORM

Cooler Received/Opened On: 2/1/17@0850 930 **Work-order#** 1702005

1. **Tracking #** 9287 **(last 4 digits, FedEx)**

   Courier: ~~FedEx~~ UPS

2. **Temperature of rep. sample or temp blank when opened:** 5.8 ***°C + correction factor (-0.1) =*** 5.7 ***°C***
   (Temp Fluke#1 SN17680086)

3. **If Item #2 temperature is 0°C or less, was the representative sample or temp blank frozen?** YES (NO)...NA

4. **Were custody seals on outside of cooler?** (YES)..NO...NA

   If yes, how many and where: 1 front

5. **Were the seals intact, signed, and dated correctly?** (YES)...NO...NA

6. **Were custody papers inside cooler?** (YES)..NO...NA

I certify that I opened the cooler and answered questions 1-6 (initial/date) TH 2/1/17

7. **Were custody seals on containers:** YES (NO) and Intact YES...NO...(NA)

   Were these signed and dated correctly? YES...NO...(NA)

8. **Packing material used?** Bubble-wrap (Plastic bag) Peanuts Vermiculite Foam Insert Paper Other None

9. **Cooling process:** (Ice) Ice-pack Ice (direct contact) Dry ice Other None

10. **Did all containers arrive in good condition (unbroken)?** (YES)..NO...NA

11. **Were all container labels complete (#, date, signed, pres., etc.)?** (YES)...NO...NA

12. **Did all container labels and tags agree with custody papers?** (YES)..NO...NA

13. **a. Were VOA vials received?** YES...(NO)..NA

    b. Was there observable headspace present in any VOA vial (>5mm-6mm)? YES...NO...(NA)

14. **Was there a Trip Blank in this cooler (custody seals present/intact)?** YES...NO...(NA)...**Comments**_____
    If multiple coolers, sequence #_____

I certify that I unloaded the cooler and answered questions 7-14 (initial/date) TH 2/1/17

15. **a. On preserved bottles, did pH test strips suggest preservation reached the correct pH level?** YES...NO...(NA)

    b. Did the bottle labels indicate that the correct preservatives were used? YES...NO...(NA)

16. **Was residual chlorine present for Cyanide "Effluent" samples? If so, treated/documented?** YES...NO...(NA)

17. **For 608 Pest/PCB samples, was pH <5 or >9? Was residual chlorine present? If either, adjusted/documented?** YES...NO...(NA)

I certify that I checked for chlorine and pH as per SOP and answered questions 15-17 (initial/date) TH 2/1/17

18. **Were custody papers properly filled out (ink, signed, etc.)?** (YES)..NO...NA

19. **Did you sign the custody papers in the appropriate place?** (YES)..NO...NA

20. **Were correct containers used for the analysis requested?** (YES)..NO...NA **If not, PM notified?** YES...NO...(NA)

21. **Was sufficient amount of sample sent in each container?** (YES)..NO...NA **If not, PM notified?** YES...NO...(NA)

22. **Were there Non-Conformance issues at login?** YES...(NO)...NCR#_____

I certify that I entered this project into LIMS and answered questions 18-22 (initial/date) TH 2/1/17
I certify that I attached a unique LIMS number label with matching sample name to each container (initial/date) TH 2/1/17

I certify that I notified the laboratory of any short holding time or RUSH parameters (initial/date) TH 2/1/17

Empirical Laboratories, LLC
Certifications/Approvals
(Revised 01/18/2017)

DoD ELAP QSM5.0, Certificate Number L2226
- Aqueous
- Non-aqueous
- Expires: 11/30/2018

State of Florida, Department of Health – NELAP Primary, Lab ID: E87646
- Clean Water Act
- RCRA/CERCLA
- Expires: 06/30/2017

State of Georgia, Environmental Protection Agency – NELAP, Self Certification
- Expires: 06/30/2017

Commonwealth of Kentucky, Energy and Environment Cabinet – WWLCP, Laboratory Number: 98017
- Wastewater
- Expires: 12/31/2017

Commonwealth of Kentucky, Department of Environmental Protection – UST, Certificate Number: 77
- Aqueous
- Non-aqueous
- Expires: 06/30/2017

State of New Jersey, Department of Environmental Protection – NELAP, Lab ID: TN473
- Water Pollution
- Solid and Hazardous Waste
- Expires: 06/30/2017

State of North Carolina, Department of Environment and Natural Resources - Certificate Number: 643
- Aqueous
- Non-aqueous
- Expires: 12/31/2017

State of Texas, Commission on Environmental Quality – NELAP, Certificate Number: T104704307-16-14
- Aqueous
- Non-aqueous
- Expires: 12/31/2017

State of Utah, Department of Health – NELAP, Certificate Number: TN0042016-8
- Aqueous
- Non-aqueous
- Expires: 07/31/2017

Commonwealth of Virginia, Department of General Services – NELAP, Certificate Number: 8924, Lab ID: 460243
- Aqueous
- Non-aqueous
- Expires: 12/14/2017

State of Washington, Department of Ecology – NELAP, Lab ID: C934-16
- Groundwater
- Solid and Hazardous Waste
- Expires: 03/18/2017

Please print or type. (Form designed for use on elite (12-pitch) typewriter.)

SC MA PPW 1/4/2017 Form Approved. OMB No. 2050-0039

UNIFORM HAZARDOUS WASTE MANIFEST

1. Generator ID Number: NM 9570024423
2. Page 1 of
3. Emergency Response Phone: 505-846-8222 ~~(800) 483-3748~~
4. Manifest Tracking Number: 010285044 FLE

5. Generator's Name and Mailing Address
Kirtland Air Force Base
2050 Wyoming Blvd. Se Bldg. 20685, Environmental Restoratio
Kirtland Air Force Base, NM 87117
Generator's Phone: (505) 846-9017 ATTN:ScottClark
Generator's Site Address (if different than mailing address)

6. Transporter 1 Company Name: Chemical Transport Inc ~~Clean Harbors Environmental Service, Inc.~~
U.S. EPA ID Number: AZT050 10008 ~~MAD039322250~~

7. Transporter 2 Company Name
U.S. EPA ID Number

8. Designated Facility Name and Site Address
Clean Harbors Deer Trail LLC
108555 East Highway 36
Deer Trail, CO 80105
Facility's Phone: ~~9703862293~~
U.S. EPA ID Number: COD991300484

9a. HM	9b. U.S. DOT Description (including Proper Shipping Name, Hazard Class, ID Number, and Packing Group (if any))	10. Containers No.	10. Containers Type	11. Total Quantity	12. Unit Wt./Vol.	13. Waste Codes
	1. NA3082, HAZARDOUS WASTE, LIQUID, N.O.S., (BENZENE), 9, PG III	1	CM	4500	4500 G	D018
	2.					
	3.					
	4.					

14. Special Handling Instructions and Additional Information
920 - 9950
1. CH1434425
2.
3.
4. Well # 106EX2 / Tank # 20253220

15. **GENERATOR'S/OFFEROR'S CERTIFICATION:** I hereby declare that the contents of this consignment are fully and accurately described above by the proper shipping name, and are classified, packaged, marked and labeled/placarded, and are in all respects in proper condition for transport according to applicable international and national governmental regulations. If export shipment and I am the Primary Exporter, I certify that the contents of this consignment conform to the terms of the attached EPA Acknowledgment of Consent.
I certify that the waste minimization statement identified in 40 CFR 262.27(a) (if I am a large quantity generator) or (b) (if I am a small quantity generator) is true.

Generator's/Offeror's Printed/Typed Name: Wheelock Katrina E. Signature: [signature] Month 05 Day 31 Year 17

16. International Shipments ☐ Import to U.S. ☐ Export from U.S. Port of entry/exit:
Transporter signature (for exports only): Date leaving U.S.:

17. Transporter Acknowledgment of Receipt of Materials
Transporter 1 Printed/Typed Name: Jeff Pence Signature: [signature] Month 5 Day 31 Year 17
Transporter 2 Printed/Typed Name: Signature: Month Day Year

18. Discrepancy
18a. Discrepancy Indication Space ☐ Quantity ☐ Type ☐ Residue ☐ Partial Rejection ☐ Full Rejection
Manifest Reference Number:
18b. Alternate Facility (or Generator) U.S. EPA ID Number
Facility's Phone:
18c. Signature of Alternate Facility (or Generator) Month Day Year

19. Hazardous Waste Report Management Method Codes (i.e., codes for hazardous waste treatment, disposal, and recycling systems)
1. 2. 3. 4.

20. Designated Facility Owner or Operator: Certification of receipt of hazardous materials covered by the manifest except as noted in Item 18a
Printed/Typed Name Signature Month Day Year

GENERATOR | INT'L | TRANSPORTER | DESIGNATED FACILITY

EPA Form 8700-22 (Rev. 3-05) Previous editions are obsolete.

DESIGNATED FACILITY TO DESTINATION STATE (IF REQUIRED)
Clean Harbors has the appropriate permits for and will accept the waste the generator is shipping.

CleanHarbors
ENVIRONMENTAL SERVICES®

Land Disposal Restriction Notification Form

Printed Date :May 31, 2017

MANIFEST INFORMATION

Generator : Kirtland Air Force Base

Address: 2050 Wyoming Blvd. Se Bldg. 20685,
Environmental Restoratio
Kirtland Afb,NM 87117

EPA ID #: NM9570024423

Manifest Tracking Info.

010285044 FLE

Sales Order No: 1702656397-004

LINE ITEM INFORMATION

Line Item:	Page No:	Profile No:	Treatability Group:	LDR Disposal Category
1.	1	CH1434425	WASTEWATER	4 (Meets LDR Standards)

EPA Waste Code	EPA Waste SubCategory
D018	NONE

LDR Chemical Data

Chemical	Underlying Hazardous Constituents	Constituents of Concern	Contaminants Subject to Treatment
1,2-DIBROMOETHANE	Y	N	N
ACETONE	Y	N	N
ACETOPHENONE	Y	N	N
BENZENE	Y	N	N
ETHYL BENZENE	Y	N	N
TOLUENE	Y	N	N
XYLENES (MIXED ISOMERS)	Y	N	N

yes KW

Certification	Applies to Manifest Line Items
I certify under penalty of law that I personally have examined and am familiar with the waste through analysis and testing or through knowledge of the waste to support this certification that the waste complies with the treatment standards specified in 40 CFR part 268 subpart D. I believe that the information I submitted is true, accurate, and complete. I am aware that there are significant penalties for submitting a false certification, including the possibility of a fine and imprisonment.	1.

Waste analysis data, where available, is attached.

Signature : [signature] Print Name Katrina Wheelock

Title : Physical Scientist Date : 2017-05-31

Please print or type. (Form designed for use on elite (12-pitch) typewriter.)

SC MA PPW 1/4/2017 Form Approved. OMB No. 2050-0039

UNIFORM HAZARDOUS WASTE MANIFEST

1. Generator ID Number: NM 9570024423
2. Page 1 of 1
3. Emergency Response Phone: (505) 846-8022 ~~(800) 483-3718~~
4. Manifest Tracking Number: 010285045 FLE

5. Generator's Name and Mailing Address
Kirtland Air Force Base
2050 Wyoming Blvd. Se Bldg. 20685, Environmental Restoratio
Kirtland Air Force Base, NM 87117
Generator's Phone: (505) 846-9017 ATTN:ScottClark

Generator's Site Address (if different than mailing address)

6. Transporter 1 Company Name: Chemical Transport INC ~~Clean Harbors Environmental Service, Inc.~~
U.S. EPA ID Number: AZT050100088 ~~MAD039322250~~

7. Transporter 2 Company Name
U.S. EPA ID Number

8. Designated Facility Name and Site Address
Clean Harbors Deer Trail LLC
108555 East Highway 36
Deer Trail, CO 80105
Facility's Phone: 9703862293
U.S. EPA ID Number: COD991300484

9a. HM	9b. U.S. DOT Description (including Proper Shipping Name, Hazard Class, ID Number, and Packing Group (if any))	10. Containers No.	10. Containers Type	11. Total Quantity	12. Unit Wt./Vol.	13. Waste Codes
	1. NA3082, HAZARDOUS WASTE, LIQUID, N.O.S., (BENZENE), PG III	1	CM	4500 ~~4560~~	G 4500	D018
	2.					
	3.					
	4.					

14. Special Handling Instructions and Additional Information
1. CH1434425
2.
3.
4. Well # 106Ex2 / Tank # 253220

891/9960

15. **GENERATOR'S/OFFEROR'S CERTIFICATION:** I hereby declare that the contents of this consignment are fully and accurately described above by the proper shipping name, and are classified, packaged, marked and labeled/placarded, and are in all respects in proper condition for transport according to applicable international and national governmental regulations. If export shipment and I am the Primary Exporter, I certify that the contents of this consignment conform to the terms of the attached EPA Acknowledgment of Consent.
I certify that the waste minimization statement identified in 40 CFR 262.27(a) (if I am a large quantity generator) or (b) (if I am a small quantity generator) is true.

Generator's/Offeror's Printed/Typed Name: Wheelock Katrina E
Signature: Katrina Wheelock
Month 05 Day 31 Year 17

INT'L
16. International Shipments ☐ Import to U.S. ☐ Export from U.S. Port of entry/exit:
Transporter signature (for exports only): Date leaving U.S.:

TRANSPORTER
17. Transporter Acknowledgment of Receipt of Materials
Transporter 1 Printed/Typed Name: Mike Waite
Signature:
Month 5 Day 31 Year 17
Transporter 2 Printed/Typed Name
Signature
Month Day Year

DESIGNATED FACILITY
18. Discrepancy
18a. Discrepancy Indication Space ☐ Quantity ☐ Type ☐ Residue ☐ Partial Rejection ☐ Full Rejection
Manifest Reference Number:
18b. Alternate Facility (or Generator)
U.S. EPA ID Number
Facility's Phone:
18c. Signature of Alternate Facility (or Generator)
Month Day Year
19. Hazardous Waste Report Management Method Codes (i.e., codes for hazardous waste treatment, disposal, and recycling systems)
1. 2. 3. 4.
20. Designated Facility Owner or Operator: Certification of receipt of hazardous materials covered by the manifest except as noted in Item 18a
Printed/Typed Name
Signature
Month Day Year

EPA Form 8700-22 (Rev. 3-05) Previous editions are obsolete.

DESIGNATED FACILITY TO DESTINATION STATE (IF REQUIRED)
Clean Harbors has the appropriate permits for and will accept the waste the generator is shipping.

CleanHarbors ENVIRONMENTAL SERVICES®

Land Disposal Restriction Notification Form

Printed Date :May 31, 2017

MANIFEST INFORMATION

Generator : Kirtland Air Force Base

Address: 2050 Wyoming Blvd. Se Bldg. 20685,
Environmental Restoratio
Kirtland Afb,NM 87117

EPA ID #: N M 9 5 7 0 0 2 4 4 2 3

Manifest Tracking Info.

010285045 PLE

Sales Order No: 1702656397-004

LINE ITEM INFORMATION

Line Item:	Page No:	Profile No:	Treatability Group:	LDR Disposal Category
1.	1	CH1434425	WASTEWATER	4 (Meets LDR Standards)

EPA Waste Code	EPA Waste SubCategory
D018	NONE

LDR Chemical Data

Chemical	Underlying Hazardous Constituents	Constituents of Concern	Contaminants Subject to Treatment
1,2-DIBROMOETHANE	Y	N	N
ACETONE	Y	N	N
ACETOPHENONE	Y	N	N
BENZENE	Y	N	N
ETHYL BENZENE	Y	N	N
TOLUENE	Y	N	N
XYLENES (MIXED ISOMERS)	Y	N	N

yes (KW)

Certification

I certify under penalty of law that I personally have examined and am familiar with the waste through analysis and testing or through knowledge of the waste to support this certification that the waste complies with the treatment standards specified in 40 CFR part 268 subpart D. I believe that the information I submitted is true, accurate, and complete. I am aware that there are significant penalties for submitting a false certification, including the possibility of a fine and imprisonment.

Applies to Manifest Line Items: 1.

Waste analysis data, where available, is attached.

Signature : Katrina Wheelock

Print Name Katrina Wheelock

Title : Physical Scientist

Date : 2017-05-31

SC MA PPW 1/4/2017

Please print or type. (Form designed for use on elite (12-pitch) typewriter.) Form Approved. OMB No. 2050-0039

UNIFORM HAZARDOUS WASTE MANIFEST

1. Generator ID Number: NM 9570024423
2. Page 1 of
3. Emergency Response Phone: ~~(800) 483-3718~~ 505-846-8222
4. Manifest Tracking Number: 010285052 FLE

5. Generator's Name and Mailing Address: Kirtland Air Force Base
2050 Wyoming Blvd. Se Bldg. 20685, Environmental Restoratio
Kirtland Air Force Base, NM 87117
Generator's Phone: ~~(505) 846-8222~~ 1017 ATTN:ScottClark

Generator's Site Address (if different than mailing address): AZT0500100088

6. Transporter 1 Company Name: ~~Clean Harbors Environmental Service, Inc.~~ Chemical Transport IIC
U.S. EPA ID Number: ~~#21050100088~~ ~~MAD039322250~~

7. Transporter 2 Company Name
U.S. EPA ID Number

8. Designated Facility Name and Site Address
Clean Harbors Deer Trail LLC
108555 East Highway 36
Deer Trail, CO 80105
Facility's Phone: 9703862293
U.S. EPA ID Number: COD991300484

9a. HM	9b. U.S. DOT Description (including Proper Shipping Name, Hazard Class, ID Number, and Packing Group (if any))	10. Containers No.	10. Containers Type	11. Total Quantity	12. Unit Wt./Vol.	13. Waste Codes
	1. NA3082, HAZARDOUS WASTE, LIQUID, N.O.S., (BENZENE), PG III	9. 1	TT	4,500	G	D018
	2.					
	3.					
	4.					

14. Special Handling Instructions and Additional Information
1. CH1434425
2.
3. Tank#251237/Well#106IN1
4.

15. **GENERATOR'S/OFFEROR'S CERTIFICATION:** I hereby declare that the contents of this consignment are fully and accurately described above by the proper shipping name, and are classified, packaged, marked and labeled/placarded, and are in all respects in proper condition for transport according to applicable international and national governmental regulations. If export shipment and I am the Primary Exporter, I certify that the contents of this consignment conform to the terms of the attached EPA Acknowledgment of Consent.
I certify that the waste minimization statement identified in 40 CFR 262.27(a) (if I am a large quantity generator) or (b) (if I am a small quantity generator) is true.

Generator's/Offeror's Printed/Typed Name: Wheelock, Katrina E
Signature: Katrina E Wheelock
Month 06 Day 07 Year 17

INT'L

16. International Shipments ☐ Import to U.S. ☐ Export from U.S. Port of entry/exit:
Transporter signature (for exports only): Date leaving U.S.:

TRANSPORTER

17. Transporter Acknowledgment of Receipt of Materials
Transporter 1 Printed/Typed Name: Jeff Perez
Signature: Jeff Perez
Month 6 Day 7 Year 17
Transporter 2 Printed/Typed Name
Signature
Month Day Year

DESIGNATED FACILITY

18. Discrepancy
18a. Discrepancy Indication Space ☐ Quantity ☐ Type ☐ Residue ☐ Partial Rejection ☐ Full Rejection
Manifest Reference Number:
18b. Alternate Facility (or Generator)
U.S. EPA ID Number
Facility's Phone:
18c. Signature of Alternate Facility (or Generator)
Month Day Year

19. Hazardous Waste Report Management Method Codes (i.e., codes for hazardous waste treatment, disposal, and recycling systems)
1. 2. 3. 4.

20. Designated Facility Owner or Operator: Certification of receipt of hazardous materials covered by the manifest except as noted in Item 18a
Printed/Typed Name
Signature
Month Day Year

EPA Form 8700-22 (Rev. 3-05) Previous editions are obsolete. DESIGNATED FACILITY TO DESTINATION STATE (IF REQUIRED)

Clean Harbors has the appropriate permits for and will accept the waste the generator is shipping.

CleanHarbors
ENVIRONMENTAL SERVICES®

Land Disposal Restriction Notification Form

Printed Date :May 31, 2017

MANIFEST INFORMATION

Generator : Kirtland Air Force Base

Address: 2050 Wyoming Blvd. Se Bldg. 20685,
Environmental Restoratio
Kirtland Afb,NM 87117

EPA ID #: N M 9 5 7 0 0 2 4 4 2 3

Manifest Tracking Info.

010285052FLE

Sales Order No: 1702656397-004

LINE ITEM INFORMATION

Line Item:	Page No:	Profile No:	Treatability Group:	LDR Disposal Category
1.	1	CH1434425	WASTEWATER	4 (Meets LDR Standards)

EPA Waste Code	EPA Waste SubCategory
D018	NONE

LDR Chemical Data

Chemical	Underlying Hazardous Constituents	Constituents of Concern	Contaminants Subject to Treatment
1,2-DIBROMOETHANE	Y	N	N
ACETONE	Y	N	N
ACETOPHENONE	Y	N	N
BENZENE	Y	N	N
ETHYL BENZENE	Y	N	N
TOLUENE	Y	N	N
XYLENES (MIXED ISOMERS)	Y	N	N

YES (KW)

Certification	Applies to Manifest Line Items
I certify under penalty of law that I personally have examined and am familiar with the waste through analysis and testing or through knowledge of the waste to support this certification that the waste complies with the treatment standards specified in 40 CFR part 268 subpart D. I believe that the information I submitted is true, accurate, and complete. I am aware that there are significant penalties for submitting a false certification, including the possibility of a fine and imprisonment.	1.

Waste analysis data, where available, is attached.

Signature : [signature] Print Name Katrina E. Wheelock

Title : Physical Scientist Date : 2017-06-07

Please print or type. (Form designed for use on elite (12-pitch) typewriter.) 49170286397-004 SC PPW 5/30/2017 Form Approved. OMB No. 2050-0039

UNIFORM HAZARDOUS WASTE MANIFEST

1. Generator ID Number: NM9570024423
2. Page 1 of 1
3. Emergency Response Phone: (800) 645-7745
4. Manifest Tracking Number: 010285059 FLE

5. Generator's Name and Mailing Address
Kirtland Air Force Base
2050 Wyoming Blvd. Se Bldg. 20505, Environmental Restoratio
Kirtland Air Force Base, NM 87117
Generator's Phone: (505) 845-7972 RC

Generator's Site Address (if different than mailing address)
2050 Wyoming Blvd. Se Bldg. 20505, Environmen
Kirtland Afb, NM 87117

6. Transporter 1 Company Name: Clean Harbors Environmental Service, Inc.
U.S. EPA ID Number: MAD039322250

7. Transporter 2 Company Name
U.S. EPA ID Number

8. Designated Facility Name and Site Address
Clean Harbors Deer Trail LLC
10285 East Highway 36
Deer Trail, CO 80105
Facility's Phone: (720) 266-2992
U.S. EPA ID Number: COD991300484

9a. HM	9b. U.S. DOT Description (including Proper Shipping Name, Hazard Class, ID Number, and Packing Group (if any))	10. Containers No.	10. Containers Type	11. Total Quantity	12. Unit Wt./Vol.	13. Waste Codes
	1. NA3082, HAZARDOUS WASTE, LIQUID, N.O.S., (BENZENE), 9, PG III	45	TT	4500	G	D018
	2.					
	3.					
	4.					

14. Special Handling Instructions and Additional Information
L.CH934925 ERG#171
Truck 223220/ Line 5X2/ Batch 253440 Tote 1 of 1
Truck # 1671
Tr # 5055
Order # 170286397-004

15. **GENERATOR'S/OFFEROR'S CERTIFICATION:** I hereby declare that the contents of this consignment are fully and accurately described above by the proper shipping name, and are classified, packaged, marked and labeled/placarded, and are in all respects in proper condition for transport according to applicable international and national governmental regulations. If export shipment and I am the Primary Exporter, I certify that the contents of this consignment conform to the terms of the attached EPA Acknowledgment of Consent.
I certify that the waste minimization statement identified in 40 CFR 262.27(a) (if I am a large quantity generator) or (b) (if I am a small quantity generator) is true.

Generator's/Offeror's Printed/Typed Name: Rebecca Clines
Signature: Rebecca Clines
Month 6 Day 5 Year 17

INT'L

16. International Shipments ☐ Import to U.S. ☐ Export from U.S. Port of entry/exit:
Transporter signature (for exports only): Date leaving U.S.:

TRANSPORTER

17. Transporter Acknowledgment of Receipt of Materials
Transporter 1 Printed/Typed Name: Rick
Signature
Month Day Year
Transporter 2 Printed/Typed Name
Signature
Month Day Year

DESIGNATED FACILITY

18. Discrepancy
18a. Discrepancy Indication Space ☐ Quantity ☐ Type ☐ Residue ☐ Partial Rejection ☐ Full Rejection
Manifest Reference Number:

18b. Alternate Facility (or Generator)
U.S. EPA ID Number
Facility's Phone:

18c. Signature of Alternate Facility (or Generator)
Month Day Year

19. Hazardous Waste Report Management Method Codes (i.e., codes for hazardous waste treatment, disposal, and recycling systems)
1. H132 2. 3. 4.

20. Designated Facility Owner or Operator: Certification of receipt of hazardous materials covered by the manifest except as noted in Item 18a
Printed/Typed Name
Signature
Month Day Year

EPA Form 8700-22 (Rev. 3-05) Previous editions are obsolete. **GENERATOR'S INITIAL COPY**

Clean Harbors has the appropriate permits for and will accept the waste the generator is shipping.

49 1703666397-004 SC HPW 5/30/2017

Please print or type. (Form designed for use on elite (12-pitch) typewriter.)

Form Approved. OMB No. 2050-0039

UNIFORM HAZARDOUS WASTE MANIFEST

1. Generator ID Number: NM9570024423
2. Page 1 of
3. Emergency Response Phone: [illegible]
4. Manifest Tracking Number: 010285060 FLE

5. Generator's Name and Mailing Address
Kirtland Air Force Base
2050 Wyoming Blvd. Se Bldg. 20685, Environmental Restoratio
Kirtland Air Force Base, NM 87117
Generator's Phone: (505) 846-[illegible] 2017 GL

Generator's Site Address (if different than mailing address)
2050 Wyoming Blvd. Se Bldg. 20685, Environmen
Kirtland AFB, NM 87117

6. Transporter 1 Company Name
Clean Harbors Environmental Service Inc.
U.S. EPA ID Number: MAD039292280

7. Transporter 2 Company Name
U.S. EPA ID Number

8. Designated Facility Name and Site Address
Clean Harbors Deer Trail LLC
10595 E Highway 36
Deer Trail, CO 80105
Facility's Phone: (970) 386-2293
U.S. EPA ID Number: COD991300484

9a. HM	9b. U.S. DOT Description (including Proper Shipping Name, Hazard Class, ID Number, and Packing Group (if any))	10. Containers No.	10. Containers Type	11. Total Quantity	12. Unit Wt./Vol.	13. Waste Codes
	1. NA3082, HAZARDOUS WASTE, LIQUID, N.O.S., (BENZENE), 9, PG III	1	TT	4500	G	D018
	2.					
	3.					
	4.					

14. Special Handling Instructions and Additional Information
LCH1934425 ERG#171 Truck# [illegible] Trl# [illegible]
Truck# 2532 Pallet# 106 EX2 order# 120415887-004

15. **GENERATOR'S/OFFEROR'S CERTIFICATION:** I hereby declare that the contents of this consignment are fully and accurately described above by the proper shipping name, and are classified, packaged, marked and labeled/placarded, and are in all respects in proper condition for transport according to applicable international and national governmental regulations. If export shipment and I am the Primary Exporter, I certify that the contents of this consignment conform to the terms of the attached EPA Acknowledgment of Consent.
I certify that the waste minimization statement identified in 40 CFR 262.27(a) (if I am a large quantity generator) or (b) (if I am a small quantity generator) is true.

Generator's/Offeror's Printed/Typed Name: Rebecca Olmes
Signature: Rebecca Olmes
Month Day Year: 6 5 17

INT'L

16. International Shipments ☐ Import to U.S. ☐ Export from U.S. Port of entry/exit:
Transporter signature (for exports only): Date leaving U.S.:

TRANSPORTER

17. Transporter Acknowledgment of Receipt of Materials
Transporter 1 Printed/Typed Name: [illegible]
Signature: [illegible]
Month Day Year: [illegible]
Transporter 2 Printed/Typed Name
Signature
Month Day Year

DESIGNATED FACILITY

18. Discrepancy
18a. Discrepancy Indication Space ☐ Quantity ☐ Type ☐ Residue ☐ Partial Rejection ☐ Full Rejection
Manifest Reference Number:

18b. Alternate Facility (or Generator)
U.S. EPA ID Number
Facility's Phone:

18c. Signature of Alternate Facility (or Generator)
Month Day Year

19. Hazardous Waste Report Management Method Codes (i.e., codes for hazardous waste treatment, disposal, and recycling systems)

1.	2.	3.	4.
H132			

20. Designated Facility Owner or Operator: Certification of receipt of hazardous materials covered by the manifest except as noted in Item 18a

Printed/Typed Name
Signature
Month Day Year

EPA Form 8700-22 (Rev. 3-05) Previous editions are obsolete.

GENERATOR'S INITIAL COPY

Clean Harbors has the appropriate permits for and will accept the waste the generator is shipping.

Please print or type. (Form designed for use on elite (12-pitch) typewriter.) SC MA PPW 5/30/2017 Form Approved. OMB No. 2050-0039

UNIFORM HAZARDOUS WASTE MANIFEST

1. Generator ID Number: NM9570024423
2. Page 1 of 1
3. Emergency Response Phone: 505-846-8222 (800)483-3718
4. Manifest Tracking Number: 010285061 FLE

5. Generator's Name and Mailing Address
Kirtland Air Force Base
2050 Wyoming Blvd. Se Bldg. 20685, Environmental Restoratio
Kirtland Air Force Base, NM 87117
Generator's Phone: (505) 846-8222 ATTN:ScottClark
Generator's Site Address (if different than mailing address)

6. Transporter 1 Company Name: Clean Harbors Environmental Service, Inc.
U.S. EPA ID Number: MAD039322250

7. Transporter 2 Company Name
U.S. EPA ID Number

8. Designated Facility Name and Site Address
Clean Harbors Deer Trail LLC
108555 East Highway 36
Deer Trail, CO 80105
Facility's Phone: 9703862293
U.S. EPA ID Number: COD991300484

9a. HM	9b. U.S. DOT Description (including Proper Shipping Name, Hazard Class, ID Number, and Packing Group (if any))	10. Containers No.	10. Containers Type	11. Total Quantity	12. Unit Wt./Vol.	13. Waste Codes
	1. NA3082, HAZARDOUS WASTE, LIQUID, N.O.S., (BENZENE), PG III	9	1	TT	4000	G	D018
	2.					
	3.					
	4.					

14. Special Handling Instructions and Additional Information
1. CH1434425
2.
3.
4. Tank #253410 / Well 106 IN1
Truck # 1914
Trailer # 3052

15. GENERATOR'S/OFFEROR'S CERTIFICATION: I hereby declare that the contents of this consignment are fully and accurately described above by the proper shipping name, and are classified, packaged, marked and labeled/placarded, and are in all respects in proper condition for transport according to applicable International and national governmental regulations. If export shipment and I am the Primary Exporter, I certify that the contents of this consignment conform to the terms of the attached EPA Acknowledgment of Consent.
I certify that the waste minimization statement identified in 40 CFR 262.27(a) (if I am a large quantity generator) or (b) (if I am a small quantity generator) is true.

Generator's/Offeror's Printed/Typed Name: Rebecca Clines
Signature: Rebecca Clines
Month 6 Day 6 Year 17

INT'L
16. International Shipments ☐ Import to U.S. ☐ Export from U.S. Port of entry/exit:
Transporter signature (for exports only): Date leaving U.S.:

TRANSPORTER
17. Transporter Acknowledgment of Receipt of Materials
Transporter 1 Printed/Typed Name: MARK NORWOOD
Signature: Mark Norwood
Month 6 Day 6 Year 17
Transporter 2 Printed/Typed Name
Signature
Month Day Year

DESIGNATED FACILITY
18. Discrepancy
18a. Discrepancy Indication Space ☐ Quantity ☐ Type ☐ Residue ☐ Partial Rejection ☐ Full Rejection
Manifest Reference Number:
18b. Alternate Facility (or Generator)
U.S. EPA ID Number
Facility's Phone:
18c. Signature of Alternate Facility (or Generator)
Month Day Year
19. Hazardous Waste Report Management Method Codes (i.e., codes for hazardous waste treatment, disposal, and recycling systems)
1. 2. 3. 4.
20. Designated Facility Owner or Operator: Certification of receipt of hazardous materials covered by the manifest except as noted in Item 18a
Printed/Typed Name
Signature
Month Day Year

EPA Form 8700-22 (Rev. 3-05) Previous editions are obsolete. DESIGNATED FACILITY TO DESTINATION STATE (IF REQUIRED)

Clean Harbors has the appropriate permits for and will accept the waste the generator is shipping.

CleanHarbors ENVIRONMENTAL SERVICES®

Land Disposal Restriction Notification Form

Printed Date :Jun 02, 2017

MANIFEST INFORMATION

Generator : Kirtland Air Force Base

Address: 2050 Wyoming Blvd. Se Bldg. 20685,
Environmental Restoratio
Kirtland Afb,NM 87117

EPA ID #: N M 9 5 7 0 0 2 4 4 2 3

Manifest Tracking Info.

010285061 FLE

Sales Order No: 1702656397-004

LINE ITEM INFORMATION

Line Item:	Page No:	Profile No:	Treatability Group:	LDR Disposal Category
1.	1	CH1434425	WASTEWATER	4 (Meets LDR Standards)

EPA Waste Code	EPA Waste SubCategory
D018	NONE

LDR Chemical Data

Chemical	Underlying Hazardous Constituents	Constituents of Concern	Contaminants Subject to Treatment
1,2-DIBROMOETHANE	Y	N	~~N~~ Y
ACETONE	Y	N	~~N~~ Y
ACETOPHENONE	Y	N	~~N~~ Y
BENZENE	Y	N	~~N~~ Y
ETHYL BENZENE	Y	N	~~N~~ Y
TOLUENE	Y	N	~~N~~ Y
XYLENES (MIXED ISOMERS)	Y	N	~~N~~ Y

Cl
RC

Certification

I certify under penalty of law that I personally have examined and am familiar with the waste through analysis and testing or through knowledge of the waste to support this certification that the waste complies with the treatment standards specified in 40 CFR part 268 subpart D. I believe that the information I submitted is true, accurate, and complete. I am aware that there are significant penalties for submitting a false certification, including the possibility of a fine and imprisonment.

Applies to Manifest Line Items: 1.

Waste analysis data, where available, is attached.

Signature : Rebecca Clines

Print Name : Rebecca Clines

Title : Physical Scientist

Date : 6/6/17

SC MA PPW 5/30/2017

Please print or type. (Form designed for use on elite (12-pitch) typewriter.) Form Approved. OMB No. 2050-0039

UNIFORM HAZARDOUS WASTE MANIFEST

1. Generator's US EPA ID Number: NM 5570024423
2. Page 1 of 1
3. Emergency Response Phone: (800) 483-8748 505-846-8222
4. Manifest Tracking Number: 010285062 FLE

5. Generator's Name and Mailing Address: Kirtland Air Force Base
Generator's Site Address (if different than mailing address): 2050 Wyoming Blvd. Se Bldg. 20685, Environmental Restoratio
Kirtland Air Force Base, NM 87117
(505) 846-8222 ATTN:ScottClark
Generator's Phone: 9017

6. Transporter 1 Company Name: Clean Harbors Environmental Service, Inc.
U.S. EPA ID Number: MAD039322250

7. Transporter 2 Company Name:
U.S. EPA ID Number:

8. Designated Facility Name and Site Address: Clean Harbors Deer Trail LLC
108555 East Highway 36
Deer Trail, CO 80105
Facility's Phone: 9703862293
U.S. EPA ID Number: COD991300484

9a. HM	9b. U.S. DOT Description (including Proper Shipping Name, Hazard Class, ID Number, and Packing Group (if any))	10. Containers No.	10. Containers Type	11. Total Quantity	12. Unit Wt./Vol.	13. Waste Codes
	1. NA3082, HAZARDOUS WASTE, LIQUID, N.O.S., (BENZENE), 9, PG III	1	TT	4500	G	D018
	2.					
	3.					
	4.					

14. Special Handling Instructions and Additional Information
1. CH1434425
2.
3. 253410 / well II
4. Tank 251237 / 106IN1

15. **GENERATOR'S/OFFEROR'S CERTIFICATION:** I hereby declare that the contents of this consignment are fully and accurately described above by the proper shipping name, and are classified, packaged, marked and labeled/placarded, and are in all respects in proper condition for transport according to applicable international and national governmental regulations. If export shipment and I am the Primary Exporter, I certify that the contents of this consignment conform to the terms of the attached EPA Acknowledgment of Consent.
I certify that the waste minimization statement identified in 40 CFR 262.27(a) (if I am a large quantity generator) or (b) (if I am a small quantity generator) is true.

Generator's/Offeror's Printed/Typed Name: Whelock Katrina E
Signature: Katrina Whelock
Month 06 Day 06 Year 17

16. International Shipments ☐ Import to U.S. ☐ Export from U.S. Port of entry/exit:
Transporter signature (for exports only): Date leaving U.S.:

17. Transporter Acknowledgment of Receipt of Materials
Transporter 1 Printed/Typed Name: David Rivera
Signature: David Rivera
Month 6 Day 6 Year 17
Transporter 2 Printed/Typed Name:
Signature:
Month Day Year

18. Discrepancy
18a. Discrepancy Indication Space ☐ Quantity ☐ Type ☐ Residue ☐ Partial Rejection ☐ Full Rejection
Manifest Reference Number:
18b. Alternate Facility (or Generator)
U.S. EPA ID Number
Facility's Phone:
18c. Signature of Alternate Facility (or Generator)
Month Day Year

19. Hazardous Waste Report Management Method Codes (i.e., codes for hazardous waste treatment, disposal, and recycling systems)
1. 2. 3. 4.

20. Designated Facility Owner or Operator: Certification of receipt of hazardous materials covered by the manifest except as noted in Item 18a
Printed/Typed Name
Signature
Month Day Year

GENERATOR — INT'L — TRANSPORTER — DESIGNATED FACILITY

EPA Form 8700-22 (Rev. 3-05), Previous editions are obsolete. DESIGNATED FACILITY TO DESTINATION STATE (IF REQUIRED)

Clean Harbors has the appropriate permits for and will accept the waste the generator is shipping

CleanHarbors ENVIRONMENTAL SERVICES®

Land Disposal Restriction Notification Form

Printed Date :Jun 02, 2017

MANIFEST INFORMATION

Generator : Kirtland Air Force Base

Address: 2050 Wyoming Blvd. Se Bldg. 20685,
Environmental Restoratio
Kirtland Afb,NM 87117

EPA ID #: N M 9 5 7 0 0 2 4 4 2 3

Manifest Tracking Info.

010285062 FLE

Sales Order No: 1702656397-004

LINE ITEM INFORMATION

Line Item:	Page No:	Profile No:	Treatability Group:	LDR Disposal Category
1.	1	CH1434425	WASTEWATER	4 (Meets LDR Standards)

EPA Waste Code	EPA Waste SubCategory
D018	NONE

LDR Chemical Data

Chemical	Underlying Hazardous Constituents	Constituents of Concern	Contaminants Subject to Treatment
1,2-DIBROMOETHANE	Y	N	~~N~~ Y
ACETONE	Y	N	~~N~~ Y
ACETOPHENONE	Y	N	~~N~~ Y
BENZENE	Y	N	~~N~~ Y
ETHYL BENZENE	Y	N	~~N~~ Y
TOLUENE	Y	N	~~N~~ Y
XYLENES (MIXED ISOMERS)	Y	N	~~N~~ Y

Certification

I certify under penalty of law that I personally have examined and am familiar with the waste through analysis and testing or through knowledge of the waste to support this certification that the waste complies with the treatment standards specified in 40 CFR part 268 subpart D. I believe that the information I submitted is true, accurate, and complete. I am aware that there are significant penalties for submitting a false certification, including the possibility of a fine and imprisonment.

Applies to Manifest Line Items: 1.

Waste analysis data, where available, is attached.

Signature : [signature] Print Name Katrina E. Wheelock

Title : Physical Scientist Date : 2017-06-06

Please print or type. (Form designed for use on elite (12-pitch) typewriter.) SC MA PPW 5/30/2017 Form Approved. OMB No. 2050-0039

UNIFORM HAZARDOUS WASTE MANIFEST

1. Generator ID Number: NM 9570024423
2. Page 1 of 1
3. Emergency Response Phone: 505-896-8222 ~~(800) 483-3718~~
4. Manifest Tracking Number: 010285063 FLE

5. Generator's Name and Mailing Address
Kirtland Air Force Base
2050 Wyoming Blvd. Se Bldg. 20685, Environmental Restoratio
Kirtland Air Force Base, NM 87117
Generator's Phone: ~~(505) 846-8388~~ ATTN:ScottClark 9017

Generator's Site Address (if different than mailing address)

6. Transporter 1 Company Name: Clean Harbors Environmental Service, Inc.
U.S. EPA ID Number: MAD039322250

7. Transporter 2 Company Name
U.S. EPA ID Number

8. Designated Facility Name and Site Address
Clean Harbors Deer Trail LLC
108555 East Highway 36
Deer Trail, CO 80105
Facility's Phone: ~~9703862293~~
U.S. EPA ID Number: COD991300484

9a. HM	9b. U.S. DOT Description (including Proper Shipping Name, Hazard Class, ID Number, and Packing Group (if any))	10. Containers No.	10. Containers Type	11. Total Quantity	12. Unit Wt./Vol.	13. Waste Codes
K	1. NA3082, HAZARDOUS WASTE, LIQUID, N.O.S., (BENZENE), PG III	1	TT	3,300	G	D018
	2.					
	3.					
	4.					

14. Special Handling Instructions and Additional Information
1. CH1434425
2. Tank
3. 251237 / well 106IN1
4.
track 1914

15. **GENERATOR'S/OFFEROR'S CERTIFICATION:** I hereby declare that the contents of this consignment are fully and accurately described above by the proper shipping name, and are classified, packaged, marked and labeled/placarded, and are in all respects in proper condition for transport according to applicable international and national governmental regulations. If export shipment and I am the Primary Exporter, I certify that the contents of this consignment conform to the terms of the attached EPA Acknowledgment of Consent.
I certify that the waste minimization statement identified in 40 CFR 262.27(a) (if I am a large quantity generator) or (b) (if I am a small quantity generator) is true.

Generator's/Offeror's Printed/Typed Name: Wheelock, Katrina E
Signature: Katrina Wheelock
Month 06 Day 08 Year 17

GENERATOR

INT'L

16. International Shipments ☐ Import to U.S. ☐ Export from U.S. Port of entry/exit:
Transporter signature (for exports only): Date leaving U.S.:

TRANSPORTER

17. Transporter Acknowledgment of Receipt of Materials
Transporter 1 Printed/Typed Name: MARK NORWOOD
Signature: Mark Norwood
Month 6 Day 8 Year 17
Transporter 2 Printed/Typed Name
Signature
Month Day Year

DESIGNATED FACILITY

18. Discrepancy
18a. Discrepancy Indication Space ☐ Quantity ☐ Type ☐ Residue ☐ Partial Rejection ☐ Full Rejection
Manifest Reference Number:
18b. Alternate Facility (or Generator)
U.S. EPA ID Number
Facility's Phone:
18c. Signature of Alternate Facility (or Generator)
Month Day Year

19. Hazardous Waste Report Management Method Codes (i.e., codes for hazardous waste treatment, disposal, and recycling systems)
1. 2. 3. 4.

20. Designated Facility Owner or Operator: Certification of receipt of hazardous materials covered by the manifest except as noted in Item 18a
Printed/Typed Name
Signature
Month Day Year

EPA Form 8700-22 (Rev. 3-05) Previous editions are obsolete.

DESIGNATED FACILITY TO DESTINATION STATE (IF REQUIRED)

Clean Harbors has the appropriate permits for and will accept the waste the generator is shipping.

CleanHarbors ENVIRONMENTAL SERVICES®

Land Disposal Restriction Notification Form

Printed Date :Jun 02, 2017

MANIFEST INFORMATION

Generator : Kirtland Air Force Base

Address: 2050 Wyoming Blvd. Se Bldg. 20685,
Environmental Restoration
Kirtland Afb,NM 87117

EPA ID #: N M 9 5 7 0 0 2 4 4 2 3

Manifest Tracking Info.

010285063 (FW)

Sales Order No: 1702656397-004

LINE ITEM INFORMATION

Line Item:	Page No:	Profile No:	Treatability Group:	LDR Disposal Category
1.	1	CH1434425	WASTEWATER	4 (Meets LDR Standards)

EPA Waste Code	EPA Waste SubCategory
D018	NONE

LDR Chemical Data

Chemical	Underlying Hazardous Constituents	Constituents of Concern	Contaminants Subject to Treatment
1,2-DIBROMOETHANE	Y	N	~~N~~ Y
ACETONE	Y	N	~~N~~ Y
ACETOPHENONE	Y	N	~~N~~ Y
BENZENE	Y	N	~~N~~ Y
ETHYL BENZENE	Y	N	~~N~~ Y
TOLUENE	Y	N	~~N~~ Y
XYLENES (MIXED ISOMERS)	Y	N	~~N~~ Y

(FW)

Certification	Applies to Manifest Line Items
I certify under penalty of law that I personally have examined and am familiar with the waste through analysis and testing or through knowledge of the waste to support this certification that the waste complies with the treatment standards specified in 40 CFR part 268 subpart D. I believe that the information I submitted is true, accurate, and complete. I am aware that there are significant penalties for submitting a false certification, including the possibility of a fine and imprisonment.	1.

Waste analysis data, where available, is attached.

Signature : Katrina E. Wheelock

Print Name Katrina E. Wheelock

Title : Physical Scientist

Date : 2017-06-08

Please print or type. (Form designed for use on elite (12-pitch) typewriter.) SC MA PPW 5/30/2017 Form Approved. OMB No. 2050-0039

UNIFORM HAZARDOUS WASTE MANIFEST

1. Generator ID Number: NM 9570024423
2. Page 1 of 1
3. Emergency Response Phone: 505-896-8222 ~~(800) 483-9718~~
4. Manifest Tracking Number: 010285065 FLE

5. Generator's Name and Mailing Address
Kirtland Air Force Base
2050 Wyoming Blvd. Se Bldg. 20685, Environmental Restoratio
Kirtland Air Force Base, NM 87117
Generator's Phone: ~~(505) 846-9222~~ 904 ATTN: Scott Clark

Generator's Site Address (if different than mailing address)

6. Transporter 1 Company Name: Chemical Transport Inc ~~Clean Harbors Environmental Service, Inc~~
U.S. EPA ID Number: AZT050010008 ~~MAD039322250~~

7. Transporter 2 Company Name
U.S. EPA ID Number

8. Designated Facility Name and Site Address
Clean Harbors Deer Trail LLC
108555 East Highway 36
Deer Trail, CO 80105
Facility's Phone: 9703862293
U.S. EPA ID Number: COD991300484

9a. HM	9b. U.S. DOT Description (including Proper Shipping Name, Hazard Class, ID Number, and Packing Group (if any))	10. Containers No.	10. Containers Type	11. Total Quantity	12. Unit Wt./Vol.	13. Waste Codes
X	1. NA3082, HAZARDOUS WASTE, LIQUID, N.O.S., (BENZENE), PG III	9. 1	TT	3500	G	D018
	2.					
	3.					
	4.					

14. Special Handling Instructions and Additional Information
1. CH1434425
2. Tank
3. 251237/1016 IN1
4. Well
891/9960

15. **GENERATOR'S/OFFEROR'S CERTIFICATION:** I hereby declare that the contents of this consignment are fully and accurately described above by the proper shipping name, and are classified, packaged, marked and labeled/placarded, and are in all respects in proper condition for transport according to applicable international and national governmental regulations. If export shipment and I am the Primary Exporter, I certify that the contents of this consignment conform to the terms of the attached EPA Acknowledgment of Consent.
I certify that the waste minimization statement identified in 40 CFR 262.27(a) (if I am a large quantity generator) or (b) (if I am a small quantity generator) is true.

Generator's/Offeror's Printed/Typed Name: Rebecca Clines
Signature: Rebecca Clines
Month 6 Day 8 Year 17

GENERATOR

INT'L

16. International Shipments ☐ Import to U.S. ☐ Export from U.S. Port of entry/exit:
Transporter signature (for exports only): Date leaving U.S.:

TRANSPORTER

17. Transporter Acknowledgment of Receipt of Materials
Transporter 1 Printed/Typed Name: Mike Waite
Signature: Mike
Month 6 Day 8 Year 17
Transporter 2 Printed/Typed Name
Signature
Month Day Year

DESIGNATED FACILITY

18. Discrepancy
18a. Discrepancy Indication Space ☐ Quantity ☐ Type ☐ Residue ☐ Partial Rejection ☐ Full Rejection
Manifest Reference Number:
18b. Alternate Facility (or Generator)
U.S. EPA ID Number
Facility's Phone:
18c. Signature of Alternate Facility (or Generator)
Month Day Year

19. Hazardous Waste Report Management Method Codes (i.e., codes for hazardous waste treatment, disposal, and recycling systems)
1. 2. 3. 4.

20. Designated Facility Owner or Operator: Certification of receipt of hazardous materials covered by the manifest except as noted in Item 18a
Printed/Typed Name
Signature
Month Day Year

EPA Form 8700-22 (Rev. 3-05) Previous editions are obsolete.

DESIGNATED FACILITY TO DESTINATION STATE (IF REQUIRED)

Clean Harbors has the appropriate permits for and will accept the waste the generator is shipping.

CleanHarbors
ENVIRONMENTAL SERVICES®

Land Disposal Restriction Notification Form

Printed Date :Jun 02, 2017

MANIFEST INFORMATION

Generator : Kirtland Air Force Base

Address: 2050 Wyoming Blvd. Se Bldg. 20685,
Environmental Restoration
Kirtland Afb,NM 87117

EPA ID #: N M 9 5 7 0 0 2 4 4 2 3

Manifest Tracking Info.

010285065

Sales Order No: 1702656397-004

LINE ITEM INFORMATION

Line Item:	Page No:	Profile No:	Treatability Group:	LDR Disposal Category
1.	1	CH1434425	WASTEWATER	4 (Meets LDR Standards)

EPA Waste Code	EPA Waste SubCategory
D018	NONE

LDR Chemical Data

Chemical	Underlying Hazardous Constituents	Constituents of Concern	Contaminants Subject to Treatment
1,2-DIBROMOETHANE	Y	N	~~N~~ Y
ACETONE	Y	N	~~N~~ Y
ACETOPHENONE	Y	N	~~N~~ Y
BENZENE	Y	N	~~N~~ Y RC
ETHYL BENZENE	Y	N	~~N~~ Y
TOLUENE	Y	N	~~N~~ Y
XYLENES (MIXED ISOMERS)	Y	N	~~N~~ Y

Certification	Applies to Manifest Line Items
I certify under penalty of law that I personally have examined and am familiar with the waste through analysis and testing or through knowledge of the waste to support this certification that the waste complies with the treatment standards specified in 40 CFR part 268 subpart D. I believe that the information I submitted is true, accurate, and complete. I am aware that there are significant penalties for submitting a false certification, including the possibility of a fine and imprisonment.	1.

Waste analysis data, where available, is attached

Signature : Rebecca Clines Print Name Rebecca Clines

Title : Physical Scientist Date : 6/8/17

49 1702656397-006 SC PPW 5/30/2017

Please print or type. (Form designed for use on elite (12-pitch) typewriter.) Form Approved. OMB No. 2050-0039

UNIFORM HAZARDOUS WASTE MANIFEST

1. Generator ID Number: NM 9 5 7 0 0 2 4 4 2 3
2. Page 1 of 1
3. Emergency Response Phone: ~~(800) 424-9300~~ 505-846-8222
4. Manifest Tracking Number: 010285072 FLE

5. Generator's Name and Mailing Address
Kirtland Air Force Base
2050 Wyoming Blvd. Se Bldg. 20685, Environmental Restoratio
Kirtland Air Force Base, NM 87117
Generator's Phone: (505) 846-~~8222~~ Attn Scott Clark 9017

Generator's Site Address (if different than mailing address)
2050 Wyoming Blvd. Se Bldg. 20685, Environmen
Kirtland Afb,NM 87117

6. Transporter 1 Company Name: Clean Harbors Environmental Services, Inc.
U.S. EPA ID Number: MAD039322250

7. Transporter 2 Company Name
U.S. EPA ID Number

8. Designated Facility Name and Site Address
Clean Harbors Deer Trail LLC
108555 East Highway 36
Deer Trail, CO 80105
Facility's Phone: (970) 386-2293
U.S. EPA ID Number: COD991300484

9a. HM	9b. U.S. DOT Description (including Proper Shipping Name, Hazard Class, ID Number, and Packing Group (if any)) (Benzene)	10. Containers No.	10. Containers Type	11. Total Quantity	12. Unit Wt./Vol.	13. Waste Codes
X	1. NA3082, HAZARDOUS WASTE, LIQUID, N.O.S., 9, PG III	1	TT	1000.6 lns		D018
	2.					
	3.					
	4.					

14. Special Handling Instructions and Additional Information
1.CH1449152 ERG#171 KAFB-106MW2-S KAFB-106MW1-S

15. **GENERATOR'S/OFFEROR'S CERTIFICATION:** I hereby declare that the contents of this consignment are fully and accurately described above by the proper shipping name, and are classified, packaged, marked and labeled/placarded, and are in all respects in proper condition for transport according to applicable international and national governmental regulations. If export shipment and I am the Primary Exporter, I certify that the contents of this consignment conform to the terms of the attached EPA Acknowledgment of Consent.
I certify that the waste minimization statement identified in 40 CFR 262.27(a) (if I am a large quantity generator) or (b) (if I am a small quantity generator) is true.

Generator's/Offeror's Printed/Typed Name: Wheelock Katrina E. Signature: [signature] Month 06 Day 21 Year 17

INT'L
16. International Shipments ☐ Import to U.S. ☐ Export from U.S. Port of entry/exit:
Transporter signature (for exports only): Date leaving U.S.:

TRANSPORTER
17. Transporter Acknowledgment of Receipt of Materials
Transporter 1 Printed/Typed Name: David Rivera Signature: [signature] Month 6 Day 21 Year 17
Transporter 2 Printed/Typed Name: Signature: Month Day Year

DESIGNATED FACILITY
18. Discrepancy
18a. Discrepancy Indication Space ☐ Quantity ☐ Type ☐ Residue ☐ Partial Rejection ☐ Full Rejection
Manifest Reference Number:
18b. Alternate Facility (or Generator) U.S. EPA ID Number
Facility's Phone:
18c. Signature of Alternate Facility (or Generator) Month Day Year
19. Hazardous Waste Report Management Method Codes (i.e., codes for hazardous waste treatment, disposal, and recycling systems)
1. H132 2. 3. 4.
20. Designated Facility Owner or Operator: Certification of receipt of hazardous materials covered by the manifest except as noted in Item 18a
Printed/Typed Name Signature Month Day Year

EPA Form 8700-22 (Rev. 3-05). Previous editions are obsolete. DESIGNATED FACILITY TO DESTINATION STATE (IF REQUIRED)

Clean Harbors has the appropriate permits for and will accept the waste the generator is shipping.

CleanHarbors
ENVIRONMENTAL SERVICES®

Land Disposal Restriction Notification Form

Printed Date :Jun 19, 2017

MANIFEST INFORMATION

Generator : Kirtland Air Force Base

Address: 2050 Wyoming Blvd. Se Bldg. 20685,
Environmental Restoratio
Kirtland Afb,NM 87117

EPA ID #: N M 9 5 7 0 0 2 4 4 2 3

Manifest Tracking Info.

010285092 FLE (pw)

Sales Order No: 1702656397-006

LINE ITEM INFORMATION

Line Item:	Page No:	Profile No:	Treatability Group:	LDR Disposal Category
1.	1	CH1449152	WASTEWATER	2 (This is subject to LDR.)

EPA Waste Code	EPA Waste SubCategory
D018	NONE

LDR Chemical Data

Chemical	Underlying Hazardous Constituents	Constituents of Concern	Contaminants Subject to Treatment
1,2-DIBROMOETHANE	Y	N	~~N~~ Y
ACETONE	Y	N	~~N~~ Y
ACETOPHENONE	Y	N	~~N~~ Y
BENZENE	Y	N	~~N~~ Y (pw)
ETHYL BENZENE	Y	N	~~N~~ Y
METHYL ETHYL KETONE	Y	N	~~N~~ Y
METHYL ISOBUTYL KETONE	Y	N	~~N~~ Y
NAPHTHALENE	Y	N	~~N~~ Y
TOLUENE	Y	N	~~N~~ Y
XYLENES (MIXED ISOMERS)	Y	N	~~N~~ Y

Certification	Applies to Manifest Line Items
Pursuant to 40 CFR 268.7(a), I hereby notify that this shipment contains waste restricted under 40 CFR Part 268.	1.

Waste analysis data, where available, is attached.

Signature : [signature] Print Name Katrina Wheelock

Title : Physical Scientist Date : 2017-06-21

Please print or type. (Form designed for use on elite (12-pitch) typewriter.) SC MA PPW 8/28/2017 Form Approved. OMB No. 2050-0039

UNIFORM HAZARDOUS WASTE MANIFEST

1. Generator ID Number: NM9570024423
2. Page 1 of: 1
3. Emergency Response Phone: (505) 846-8222
4. Manifest Tracking Number: 010285148 FLE

5. Generator's Name and Mailing Address
Kirtland Air Force Base
2050 Wyoming Blvd. Se Bldg. 20685, Environmental Restoratio
Kirtland Air Force Base, NM 87117
Generator's Phone: (505) 846-9017 ATTN:ScottClark

Generator's Site Address (if different than mailing address)

6. Transporter 1 Company Name: Clean Harbors Environmental Services, Inc.
U.S. EPA ID Number: MAD039322250

7. Transporter 2 Company Name:
U.S. EPA ID Number:

8. Designated Facility Name and Site Address
Clean Harbors Deer Trail LLC
108555 East Highway 36
Deer Trail, CO 80105
Facility's Phone: 9703962293
U.S. EPA ID Number: COD991300484

9a. HM	9b. U.S. DOT Description (Including Proper Shipping Name, Hazard Class, ID Number, and Packing Group (if any))	10. Containers No.	10. Containers Type	11. Total Quantity	12. Unit Wt./Vol.	13. Waste Codes
X	1. NA3082, HAZARDOUS WASTE, LIQUID, N.O.S., (BENZENE), 9, PG III	1	TT	1800	G	D018
	2.					
	3.					
	4.					

14. Special Handling Instructions and Additional Information
1. CR1449152 ERG 171
2.
3.
4.
Job# 1702656397

15. **GENERATOR'S/OFFEROR'S CERTIFICATION:** I hereby declare that the contents of this consignment are fully and accurately described above by the proper shipping name, and are classified, packaged, marked and labeled/placarded, and are in all respects in proper condition for transport according to applicable international and national governmental regulations. If export shipment and I am the Primary Exporter, I certify that the contents of this consignment conform to the terms of the attached EPA Acknowledgment of Consent.
I certify that the waste minimization statement identified in 40 CFR 262.27(a) (if I am a large quantity generator) or (b) (if I am a small quantity generator) is true.

Generator's/Offeror's Printed/Typed Name: Wheelock, Katrina E
Signature: Katrina Wheelock
Month 09 Day 28 Year 17

16. International Shipments ☐ Import to U.S. ☐ Export from U.S. Port of entry/exit:
Transporter signature (for exports only): Date leaving U.S.:

17. Transporter Acknowledgment of Receipt of Materials
Transporter 1 Printed/Typed Name: Kenny Sanchez
Signature:
Month 9 Day 28 Year 17
Transporter 2 Printed/Typed Name: Kenny Sanchez KS
Signature: KS
Month 9 Day 28 Year 17

18. Discrepancy
18a. Discrepancy Indication Space ☐ Quantity ☐ Type ☐ Residue ☐ Partial Rejection ☐ Full Rejection
Manifest Reference Number:
18b. Alternate Facility (or Generator)
U.S. EPA ID Number
Facility's Phone:
18c. Signature of Alternate Facility (or Generator)
Month Day Year

19. Hazardous Waste Report Management Method Codes (i.e., codes for hazardous waste treatment, disposal, and recycling systems)
1. 2. 3. 4.

20. Designated Facility Owner or Operator: Certification of receipt of hazardous materials covered by the manifest except as noted in Item 18a
Printed/Typed Name
Signature
Month Day Year

GENERATOR | INT'L | TRANSPORTER | DESIGNATED FACILITY

EPA Form 8700-22 (Rev. 3-05) Previous editions are obsolete.

DESIGNATED FACILITY TO DESTINATION STATE (IF REQUIRED)
Clean Harbors has the appropriate permits for and will accept the waste the generator is shipping.

Please print or type. (Form designed for use on elite (12-pitch) typewriter.)

SC MA PPW 10/10/2017

Form Approved. OMB No. 2050-0039

UNIFORM HAZARDOUS WASTE MANIFEST

1. Generator ID Number	2. Page 1 of	3. Emergency Response Phone	4. Manifest Tracking Number
NM 9570024423	1	(505) 385-3679	010285193 FLE

5. Generator's Name and Mailing Address
Kirtland Air Force Base
2050 Wyoming Blvd. Se Bldg. 20685, Environmental Restoratio
Kirtland Air Force Base, NM 87117
Generator's Phone: (505) 846-9017 ATTN:ScottClark

Generator's Site Address (if different than mailing address)

6. Transporter 1 Company Name: Clean Harbors Environmental Services, Inc.
U.S. EPA ID Number: MAD039322250

7. Transporter 2 Company Name:
U.S. EPA ID Number:

8. Designated Facility Name and Site Address
Clean Harbors Aragonite LLC
11600 North Aptus Road
Grantsville, UT 84029
Facility's Phone: 4358848100
U.S. EPA ID Number: UTD981552177

9a. HM	9b. U.S. DOT Description (including Proper Shipping Name, Hazard Class, ID Number, and Packing Group (if any))	10. Containers No.	10. Containers Type	11. Total Quantity	12. Unit Wt./Vol.	13. Waste Codes
X	1. NA3082, HAZARDOUS WASTE, LIQUID, N.O.S., (BENZENE), 9, PG III	1	TT	825	Gls	D018
	2.					
	3.					
	4.					

14. Special Handling Instructions and Additional Information
1. CH1555430
2.
3.
4.

15. **GENERATOR'S/OFFEROR'S CERTIFICATION:** I hereby declare that the contents of this consignment are fully and accurately described above by the proper shipping name, and are classified, packaged, marked and labeled/placarded, and are in all respects in proper condition for transport according to applicable international and national governmental regulations. If export shipment and I am the Primary Exporter, I certify that the contents of this consignment conform to the terms of the attached EPA Acknowledgment of Consent.
I certify that the waste minimization statement identified in 40 CFR 262.27(a) (if I am a large quantity generator) or (b) (if I am a small quantity generator) is true.

Generator's/Offeror's Printed/Typed Name: Rebecca Clines
Signature: Rebecca Clines
Month 12 Day 28 Year 17

GENERATOR

INT'L

16. International Shipments ☐ Import to U.S. ☐ Export from U.S. Port of entry/exit:
Transporter signature (for exports only): Date leaving U.S.:

TRANSPORTER

17. Transporter Acknowledgment of Receipt of Materials
Transporter 1 Printed/Typed Name: David Rivera
Signature: David Rivera
Month 12 Day 28 Year 17
Transporter 2 Printed/Typed Name:
Signature:
Month Day Year

DESIGNATED FACILITY

18. Discrepancy
18a. Discrepancy Indication Space ☐ Quantity ☐ Type ☐ Residue ☐ Partial Rejection ☐ Full Rejection
Manifest Reference Number:
18b. Alternate Facility (or Generator)
U.S. EPA ID Number
Facility's Phone:
18c. Signature of Alternate Facility (or Generator)
Month Day Year

19. Hazardous Waste Report Management Method Codes (i.e., codes for hazardous waste treatment, disposal, and recycling systems)
1. 2. 3. 4.

20. Designated Facility Owner or Operator: Certification of receipt of hazardous materials covered by the manifest except as noted in Item 18a
Printed/Typed Name
Signature
Month Day Year

EPA Form 8700-22 (Rev. 3-05) Previous editions are obsolete.

DESIGNATED FACILITY TO DESTINATION STATE (IF REQUIRED)

Clean Harbors has the appropriate permits for and will accept the waste the generator is shipping.

CleanHarbors ENVIRONMENTAL SERVICES®

Land Disposal Restriction Notification Form

Printed Date :Dec 18, 2017

MANIFEST INFORMATION

Generator : Kirtland Air Force Base

Address: 2050 Wyoming Blvd. Se Bldg. 20685,
Environmental Restoratio
Kirtland Afb,NM 87117

EPA ID #: N M 9 5 7 0 0 2 4 4 2 3

Manifest Tracking Info.

010285193FLE

Sales Order No: 1702656397-008

LINE ITEM INFORMATION

Line Item:	Page No:	Profile No:	Treatability Group:	LDR Disposal Category
1.	1	CH1555430	WASTEWATER	2 (This is subject to LDR.)

EPA Waste Code	EPA Waste SubCategory
D018	NONE

LDR Chemical Data

Chemical	Underlying Hazardous Constituents	Constituents of Concern	Contaminants Subject to Treatment
1,2-DIBROMOETHANE	Y	N	Y
ACETONE	Y	N	Y
ACETOPHENONE	Y	N	Y
BENZENE	Y	N	Y
ETHYL BENZENE	Y	N	Y
METHYL ETHYL KETONE	Y	N	Y
METHYL ISOBUTYL KETONE.	Y	N	Y
NAPHTHALENE	Y	N	Y
TOLUENE	Y	N	Y
XYLENES (MIXED ISOMERS)	Y	N	Y

Certification	Applies to Manifest Line Items
Pursuant to 40 CFR 268.7(a), I hereby notify that this shipment contains waste restricted under 40 CFR Part 268.	1.

Waste analysis data, where available, is attached.

Signature : Rebecca Clines

Print Name Rebecca Clines

Title : Physical Scientist

Date : 12/28/17

Please print or type. Form Approved. OMB No. 2050-0039

UNIFORM HAZARDOUS WASTE MANIFEST

1. Generator ID Number: NM9570024423
2. Page 1 of: 1
3. Emergency Response Phone: 505 385 3679
4. Manifest Tracking Number: 012267057 FLE

5. Generator's Name and Mailing Address
KIRTLAND AIR FORCE BASE
2050 WYOMING BLVD SE BLDG 20885
KIRTLAND AIR FORCE BASE, NM 87117
Generator's Phone: 505 846-9017 Scott Clark

Generator's Site Address (if different than mailing address)

6. Transporter 1 Company Name: Advanced Chemical Transport Inc /DBA ACTENVIRO
U.S. EPA ID Number: CAR000070540

7. Transporter 2 Company Name
U.S. EPA ID Number

8. Designated Facility Name and Site Address
Advanced Chemical Treatment
8133 Edith Blvd NE
Albuquerque, NM 87107
Facility's Phone: 505 349-5220
U.S. EPA ID Number: NMD002208627

9a. HM	9b. U.S. DOT Description (including Proper Shipping Name, Hazard Class, ID Number, and Packing Group (if any))	10. Containers No.	10. Containers Type	11. Total Quantity	12. Unit Wt./Vol.	13. Waste Codes		
	1. NA3082 Hazardous waste, liquid, n.o.s. (Benzene), 9, PGIII	07	DM	2800	P	D018		
	2.							
	3.							
	4.							

14. Special Handling Instructions and Additional Information
1) ERG#171. ACT76908 KIA-57 55 DM Project Number 179150 Document # D214747

24 HOUR EMERGENCY CONTACT: SCOTT CLARK 505 385 3679

15. **GENERATOR'S/OFFEROR'S CERTIFICATION:** I hereby declare that the contents of this consignment are fully and accurately described above by the proper shipping name, and are classified, packaged, marked and labeled/placarded, and are in all respects in proper condition for transport according to applicable international and national governmental regulations. If export shipment and I am the Primary Exporter, I certify that the contents of this consignment conform to the terms of the attached EPA Acknowledgment of Consent.
I certify that the waste minimization statement identified in 40 CFR 262.27(a) (if I am a large quantity generator) or (b) (if I am a small quantity generator) is true.

Generator's/Offeror's Printed/Typed Name: Wasson, Justin E
Signature:
Month 10 Day 19 Year 18

GENERATOR

INT'L

16. International Shipments ☐ Import to U.S. ☐ Export from U.S. Port of entry/exit:
Transporter signature (for exports only): Date leaving U.S.:

TRANSPORTER

17. Transporter Acknowledgment of Receipt of Materials
Transporter 1 Printed/Typed Name: Justin Gray
Signature:
Month 10 Day 19 Year 18
Transporter 2 Printed/Typed Name
Signature
Month Day Year

DESIGNATED FACILITY

18. Discrepancy
18a. Discrepancy Indication Space ☐ Quantity ☐ Type ☐ Residue ☐ Partial Rejection ☐ Full Rejection
Manifest Reference Number:

18b. Alternate Facility (or Generator)
U.S. EPA ID Number
Facility's Phone:

18c. Signature of Alternate Facility (or Generator)
Month Day Year

19. Hazardous Waste Report Management Method Codes (i.e., codes for hazardous waste treatment, disposal, and recycling systems)
1. 2. 3. 4.

20. Designated Facility Owner or Operator: Certification of receipt of hazardous materials covered by the manifest except as noted in Item 18a
Printed/Typed Name
Signature
Month Day Year

LAND DISPOSAL RESTRICTION NOTIFICATION FORM FOR WASTES SUBJECT TO THE TREATMENT STANDARDS FOUND IN 40 CFR 268

GENERATOR NAME	MANIFEST NUMBER
KIRTLAND AIR FORCE BASE	012267057FLE

1. PROFILE NUMBER	2. WASTE CODE	3. WASTE SUBCATEGORY	4. UNDERLYING HAZARDOUS CONSTITUENTS	5. NWW or WW	6. SPECIAL CONDITIONS	N/A
ACT76908	D018	BENZENE		WW		
			1,2-DIBROMOETHANE-0.432MG/L			
			ACETOPHENONE-8.24 MG/L			
			2-BUTANONE-0.591 MG/L			
			4-METHYL-2-PENTANONE-0.665 MG/L			
			ACETONE-2.81 MG/L			
			ETHYLBENZENE-1.35 MG/L			
			NAPHTHALENE-0.148 MG/L			
			TOLUENE-13.9 MG/L			
			XYLENES-5.48 MG/L			
			BENZENE-9.16 MG/L (OVER TCLP LIMIT)			

SPECIAL CONDITIONS: PLEASE NOTE ANY SPECIAL CONDITIONS THAT MAY APPLY TO EACH WASTE PROFILE NUMBER IN COLUMN 6 OF THIS FORM. IF NONE OF THE SPECIAL CONDITIONS BELOW EXIST AND THE WASTE MUST BE TREATED TO THE APPLICABLE STANDARDS IN 40CFR268.40, CHECK N/A FOR THE APPROPRIATE WASTE PROFILE.

A. Waste Requiring No Further Treatment

B. Lab Pack Waste Qualifying for Alternative Treatment und 40 CFR 268.40

C. Hazardous Waste Debris subject to standard treatment requirements, 40 CFR 268.40

D. Hazardous Waste Debris subject to alternative standards in 40 CFR 268 (list contaminants)

E. Waste Qualifying for Exemption and not subject to Land Disposal Restriction (Explain)

F. Characteristic waste that are subject to the treatment standards in 268.40 (other than those expressed as a required method of treatment) that are reasonably expected to contain underlying hazardous constituents as defined in 268.2(i); are treated on-site to remove hazardous characteristic; and are sent off-site for treatment underlying hazardous constituents (list constituents)

G. Characteristic wastes that contain underlying hazardous constituents as defined 268.2(i) that are treated on-site to remove the hazardous characteristic and the underlying hazardous constituents to levels in 268.48 Universal Treatment Standards.

H. For Chemical Manufacturers, Petroleum Refineries, Coke By-Product Facilities and RCRA TSDF handling wastes subject to 40 CFR 61 subpart FF ONLY. This waste is "Controlled Benzene Waste" which is subject to the notification requirements of 40 CFR subpart FF.

I. Certification for contaminated soil indicating the presence or absence of characteristic and / or listed hazardous wastes.

ORIGINAL SIGNATURE PAGE TO ACCOMPANY MANIFEST

J. Certification for contaminated soil treated in accordance with 40 CFR 268.49

Waste analysis is attached where available; otherwise the information contained herein is based upon my thorough knowledge of the waste(s).

I hereby certify that I believe that the information I have submitted is true, accurate and complete.

SIGNATURE	TITLE	DATE
[illegible]	Physical Scientist	10/19/18

LAND DISPOSAL RESTRICTION NOTIFICATION FORM FOR WASTES SUBJECT TO THE TREATMENT STANDARDS FOUND IN 40 CFR 268

WASTE STREAMS IDENTIFIED BY SPECIAL CONDITION A

I certify under penalty of law that I personally have examined and am familiar with the waste through analysis and testing or through knowledge of the waste to support this certification that the waste complies with the treatment standards specified in 40 CFR part 268 subpart D and all applicable prohibitions set forth in 40 CFR 268.32 or RCRA section 3004(d). I believe that the information I have submitted is true, accurate and complete. I am aware that there are significant penalties for submitting a false certification, including the possibility of fine and imprisonment.

WASTE STREAMS IDENTIFIED BY SPECIAL CONDITION B

I certify under penalty of law that I personally have examined and am familiar with the waste and that lab pack contains only wastes which have not been excluded under appendix iv to 40 CFR 268. I am aware that there are significant penalties for submitting a false certification, including fine and imprisonment.

WASTE STREAMS IDENTIFIED BY SPECIAL CONDITION F

I certify under penalty of law that the waste has been treated in accordance with the requirements of 40 CFR 286.40 to remove the hazardous characteristic. This de-characterized waste contains underlying hazardous constituents that require further treatment to meet universal treatment standards. I am aware that there are significant penalties for submitting a false certification, including the possibility of fine and imprisonment.

WASTE STREAMS IDENTIFIED BY SPECIAL CONDITION G

I certify under penalty of law that the waste has been treated in accordance with the requirements of 40 CFR 286.40 to remove the hazardous characteristic, and that the underlying hazardous constituents, as defined in 268.2 have been treated on site to the 268.48 Universal Treatment Standards. I am aware that there are significant penalties for submitting a false certification, including the possibility of fine and imprisonment.

WASTE STREAMS IDENTIFIED BY SPECIAL CONDITION I

I certify under penalty of law that I personally have examined this contaminated soil and it [DOES/DOES NOT] contain listed hazardous waste and [DOES/DOES NOT] exhibit a characteristic of hazardous waste and requires treatment to meet the soil treatment standards as provided by 268.49(c).

WASTE STREAMS IDENTIFIED BY SPECIAL CONDITION J

I certify under penalty of law that I have personally examined and am familiar with the treatment technology and operation of the treatment process used to support this certification and believe that it has been maintained and operated properly so as to comply with treatment standards specified in 40 CFR 268.49 without impermissible dilution of the prohibited wastes. I am aware there are significant penalties for submitting a false certification, including the possibility of fine and imprisonment.

ORIGINAL SIGNATURE PAGE TO ACCOMPANY MANIFEST

Please print or type. Form Approved. OMB No. 2050-0039

UNIFORM HAZARDOUS WASTE MANIFEST

1. Generator ID Number: NM9570024423
2. Page 1 of 1
3. Emergency Response Phone: 505 385 3679
4. Manifest Tracking Number: 012267216 FLE

GENERATOR

5. Generator's Name and Mailing Address: E BASE
2050 WYOMING BLVD SE BLDG 20635
KIRTLAND AIR FORCE BASE, NM 87117
Generator's Phone: SCOTT CLARK 505-846-9017

Generator's Site Address (if different than mailing address)

6. Transporter 1 Company Name: Advanced Chemical Transport Inc /DBA ACTENVIRO
U.S. EPA ID Number: CAR000070540

7. Transporter 2 Company Name
U.S. EPA ID Number

8. Designated Facility Name and Site Address: Advanced Chemical Treatment
6133 Edith Blvd NE
Albuquerque, NM 87107
Facility's Phone: 505 349-5220
U.S. EPA ID Number: NMD002208627

9a. HM	9b. U.S. DOT Description (including Proper Shipping Name, Hazard Class, ID Number, and Packing Group (if any))	10. Containers No.	10. Containers Type	11. Total Quantity	12. Unit Wt./Vol.	13. Waste Codes		
X	1. NA3082 Hazardous waste liquid, n o s (Benzene) 9 PGIII		DM		P	D018		
	2.							
	3.							
	4.							

14. Special Handling Instructions and Additional Information
Project Number D2175 Document # 1130002
1) ERG#171, AC176908 KIA
24 HOUR EMERGENCY CONTACT SCOTT CLARK 505 385 3679

15. **GENERATOR'S/OFFEROR'S CERTIFICATION:** I hereby declare that the contents of this consignment are fully and accurately described above by the proper shipping name, and are classified, packaged, marked and labeled/placarded, and are in all respects in proper condition for transport according to applicable international and national governmental regulations. If export shipment and I am the Primary Exporter, I certify that the contents of this consignment conform to the terms of the attached EPA Acknowledgment of Consent.
I certify that the waste minimization statement identified in 40 CFR 262.27(a) (if I am a large quantity generator) or (b) (if I am a small quantity generator) is true.

Generator's/Offeror's Printed/Typed Name | Signature | Month | Day | Year

INT'L

16. International Shipments ☐ Import to U.S. ☐ Export from U.S. Port of entry/exit:
Transporter signature (for exports only): Date leaving U.S.:

TRANSPORTER

17. Transporter Acknowledgment of Receipt of Materials
Transporter 1 Printed/Typed Name | Signature | Month | Day | Year
Transporter 2 Printed/Typed Name | Signature | Month | Day | Year

DESIGNATED FACILITY

18. Discrepancy
18a. Discrepancy Indication Space ☐ Quantity ☐ Type ☐ Residue ☐ Partial ☐ Full
Manifest Reference Number:
18b. Alternate Facility (or Generator)
Facility's Phone:
18c. Signature of Alternate Facility (or Generator) | Year

3 DM - 1180#
APT IM

19. Hazardous Waste Report Management Method Codes (i.e., codes for hazardous waste treatment, disposal, and recycling systems)
1. 2. 3.

20. Designated Facility Owner or Operator: Certification of receipt of hazardous materials covered by the manifest except as noted in Item 18a
Printed/Typed Name | Signature | Month | Day | Year

ACT environmental services

LAND DISPOSAL RESTRICTION NOTIFICATION FORM FOR WASTES SUBJECT TO THE TREATMENT STANDARDS FOUND IN 40 CFR 268

GENERATOR NAME	MANIFEST NUMBER
KIRTLAND AIR FORCE BASE	012267216FLE

1. PROFILE NUMBER	2. WASTE CODE	3. WASTE SUBCATEGORY	4. UNDERLYING HAZARDOUS CONSTITUENTS	5. NWW or WW	6. SPECIAL CONDITIONS	N/A
ACT76908	D018	BENZENE		WW		
			1,2-DIBROMOETHANE-0.432MG/L			
			ACETOPHENONE-8.24 MG/L			
			2-BUTANONE-0.591 MG/L			
			4-METHYL-2-PENTANONE-0.665 MG/L			
			ACETONE-2.81 MG/L			
			ETHYLBENZENE-1.35 MG/L			
			NAPHTHALENE-0.148 MG/L			
			TOLUENE-13.9 MG/L			
			XYLENES-5.48 MG/L			
			BENZENE-9.16 MG/L (OVER TCLP LIMIT)			

SPECIAL CONDITIONS: PLEASE NOTE ANY SPECIAL CONDITIONS THAT MAY APPLY TO EACH WASTE PROFILE NUMBER IN COLUMN 6 OF THIS FORM. IF NONE OF THE SPECIAL CONDITIONS BELOW EXIST AND THE WASTE MUST BE TREATED TO THE APPLICABLE STANDARDS IN 40CFR268.40, CHECK N/A FOR THE APPROPRIATE WASTE PROFILE.

A. Waste Requiring No Further Treatment

B. Lab Pack Waste Qualifying for Alternative Treatment und 40 CFR 268.40

C. Hazardous Waste Debris subject to standard treatment requirements, 40 CFR 268.40

D. Hazardous Waste Debris subject to alternative standards in 40 CFR 268 (list contaminants)

E. Waste Qualifying for Exemption and not subject to Land Disposal Restriction (Explain)

F. Characteristic waste that are subject to the treatment standards in 268.40 (other than those expressed as a required method of treatment) that are reasonably expected to contain underlying hazardous constituents as defined in 268.2(i); are treated on-site to remove hazardous characteristic; and are sent off-site for treatment underlying hazardous constituents (list constituents)

G. Characteristic wastes that contain underlying hazardous constituents as defined 268.2(i) that are treated on-site to remove the hazardous characteristic and the underlying hazardous constituents to levels in 268.48 Universal Treatment Standards.

H. For Chemical Manufacturers, Petroleum Refineries, Coke By-Product Facilities and RCRA TSDF handling wastes subject to 40 CFR 61 subpart FF ONLY. This waste is "Controlled Benzene Waste" which is subject to the notification requirements of 40 CFR subpart FF.

I. Certification for contaminated soil indicating the presence or absence of characteristic and / or listed hazardous wastes.

ORIGINAL SIGNATURE PAGE TO ACCOMPANY MANIFEST

ACT environmental services

J. Certification for contaminated soil treated in accordance with 40 CFR 268.49

Waste analysis is attached where available; otherwise the information contained herein is based upon my thorough knowledge of the waste(s).

I hereby certify that I believe that the information I have submitted is true, accurate and complete.

SIGNATURE	TITLE	DATE
[illegible]	Physical Chemist	20190211

LAND DISPOSAL RESTRICTION NOTIFICATION FORM FOR WASTES SUBJECT TO THE TREATMENT STANDARDS FOUND IN 40 CFR 268

WASTE STREAMS IDENTIFIED BY SPECIAL CONDITION A

I certify under penalty of law that I personally have examined and am familiar with the waste through analysis and testing or through knowledge of the waste to support this certification that the waste complies with the treatment standards specified in 40 CFR part 268 subpart D and all applicable prohibitions set forth in 40 CFR 268.32 or RCRA section 3004(d). I believe that the information I have submitted is true, accurate and complete. I am aware that there are significant penalties for submitting a false certification, including the possibility of fine and imprisonment.

WASTE STREAMS IDENTIFIED BY SPECIAL CONDITION B

I certify under penalty of law that I personally have examined and am familiar with the waste and that lab pack contains only wastes which have not been excluded under appendix iv to 40 CFR 268. I am aware that there are significant penalties for submitting a false certification, including fine and imprisonment.

WASTE STREAMS IDENTIFIED BY SPECIAL CONDITION F

I certify under penalty of law that the waste has been treated in accordance with the requirements of 40 CFR 286.40 to remove the hazardous characteristic. This de-characterized waste contains underlying hazardous constituents that require further treatment to meet universal treatment standards. I am aware that there are significant penalties for submitting a false certification, including the possibility of fine and imprisonment.

WASTE STREAMS IDENTIFIED BY SPECIAL CONDITION G

I certify under penalty of law that the waste has been treated in accordance with the requirements of 40 CFR 286.40 to remove the hazardous characteristic, and that the underlying hazardous constituents, as defined in 268.2 have been treated on site to the 268.48 Universal Treatment Standards. I am aware that there are significant penalties for submitting a false certification, including the possibility of fine and imprisonment.

WASTE STREAMS IDENTIFIED BY SPECIAL CONDITION I

I certify under penalty of law that I personally have examined this contaminated soil and it [DOES/DOES NOT] contain listed hazardous waste and [DOES/DOES NOT] exhibit a characteristic of hazardous waste and requires treatment to meet the soil treatment standards as provided by 268.49(c).

WASTE STREAMS IDENTIFIED BY SPECIAL CONDITION J

I certify under penalty of law that I have personally examined and am familiar with the treatment technology and operation of the treatment process used to support this certification and believe that it has been maintained and operated properly so as to comply with treatment standards specified in 40 CFR 268.49 without impermissible dilution of the prohibited wastes. I am aware there are significant penalties for submitting a false certification, including the possibility of fine and imprisonment.

ORIGINAL SIGNATURE PAGE TO ACCOMPANY MANIFEST

LAND DISPOSAL RESTRICTION NOTIFICATION FORM FOR WASTES SUBJECT TO THE TREATMENT STANDARDS FOUND IN 40 CFR 268

GENERATOR NAME	MANIFEST NUMBER
KIRTLAND AIR FORCE BASE	011074183FLE

Line	TSD Approval	Waste Code(s)	Subcategory	UHC's	NWW or WW	Special Conditions
1	ACT76908	D018	BENZENE		WW	
				1,2-DIBROMOETHANE-0.432MG/L		
				ACETOPHENONE-8.24 MG/L		
				2-BUTANONE-0.591 MG/L		
				4-METHUL-2-PENTANONE-0.665 MG/L		
				ACETONE-2.81 MG/L		
				ETHYLBENZENE-1.35 MG/L		
				NAPHTHALENE-0.148 MG/L		
				TOLUENE-13.9 MG/L		
				XYLENES-5.48 MG/L		
				BENZENE-9.16MG/L(OVER TCLP LIMIT)		

SPECIAL CONDITIONS:

A. Waste Requiring No Further Treatment
B. Lab Pack Waste Qualifying for Alternative Treatment und 40 CFR 268.40
C. Hazardous Waste Debris subject to standard treatment requirements, 40 CFR 268.40
D. Hazardous Waste Debris subject to alternative standards in 40 CFR 268 (list contaminants)
E. Waste Qualifying for Exemption and not subject to Land Disposal Restriction (Explain)
F. Characteristic waste that are subject to the treatment standards in 268.40 (other than those expressed as a required method of treatment) that are reasonably expected to contain underlying hazardous constituents as defined in 268.2(i); are treated on-site to remove hazardous characteristic; and are sent off-site for treatment underlying hazardous constituents (list constituents)
G. Characteristic wastes that contain underlying hazardous constituents as defined 268.2(i) that are treated on-site to remove the hazardous characteristic and the underlying hazardous constituents to levels in 268.48 Universal Treatment Standards.
H. For Chemical Manufacturers, Petroleum Refineries, Coke By-Product Facilities and RCRA TSDF handling wastes subject to 40 CFR 61 subpart FF ONLY. This waste is "Controlled Benzene Waste" which is subject to the notification requirements of 40 CFR subpart FF.
I. Certification for contaminated soil indicating the presence or absence of characteristic and / or listed hazardous wastes.
J. Certification for contaminated soil treated in accordance with 40 CFR 268.49
Waste analysis is attached where available; otherwise the information contained herin is based upon my thorough knowledge of the waste(s).

I hereby certify that I believe that the information I have submitted is true, accurate and complete:

SIGNATURE	TITLE	DATE
[illegible]	Physical Scientist	20180409

WASTE STREAMS IDENTIFIED BY SPECIAL CONDITION A
I certify under penalty of law that I personally have examined and am familiar with the waste through analysis and testing or through knowledge of the waste to support this certification that the waste complies with the treatment standards specified in 40 CFR part 268 subpart D and all applicable prohibitions set forth in 40 CFR 268.32 or RCRA section 3004(d). I believe that the information I have submitted is true, accurate and complete. I am aware that there are significant penalties for submitting a false certification, including the possibility of fine and imprisonment.

WASTE STREAMS IDENTIFIED BY SPECIAL CONDITION B
I certify under penalty of law that I personally have examined and am familiar with the waste and that lab pack contains only wastes which have not been excluded under appendix iv to 40 CFR 268. I am aware that there are significant penalties for submitting a false certification, including fine and imprisonment.

WASTE STREAMS IDENTIFIED BY SPECIAL CONDITION F
I certify under penalty of law that the waste has been treated in accordance with the requirements of 40 CFR 286.40 to remove the hazardous characteristic. This decharacterized waste contains underlying hazardous constituents that require further treatment to meet universal treatment standards. I am aware that there are significant penalties for submitting a false certification, including the possibility of fine and imprisonment.

WASTE STREAMS IDENTIFIED BY SPECIAL CONDITION G
I certify under penalty of law that the waste has been treated in accordance with the requirements of 40 CFR 286.40 to remove the hazardous characteristic, and that the underlying hazardous constituents, as defined in 268.2 have been treated on site to the 268.48 Universal Treatment Standards. I am aware that there are significant penalties for submitting a false certification, including the possibility of fine and imprisonment.

WASTE STREAMS IDENTIFIED BY SPECIAL CONDITION I
I certify under penalty of law that I personally have examined this contaminated soil and it [DOES/DOES NOT] contain listed hazardous waste and [DOES/DOES NOT] exhibit a characteristic of hazardous waste and requires treatment to meet the soil treatment standards as provided by 268.49(c).

*****ORIGINAL SIGNATURE PAGE TO ACCOMPANY MANIFEST*****

Please print or type. (Form designed for use on elite (12-pitch) typewriter.)

Form Approved. OMB No. 2050-0039

UNIFORM HAZARDOUS WASTE MANIFEST

1. Generator ID Number: NM9570024423
2. Page 1 of: 1
3. Emergency Response Phone: 505 385 3879
4. Manifest Tracking Number: 011074298 FLE

5. Generator's Name and Mailing Address
KIRTLAND AIR FORCE BASE
2050 WYOMING BLVD SE BLDG 20685
KIRTLAND AIR FORCE BASE, NM 87117
Generator's Phone: 505 846 9017 Attn: Scott Clark

Generator's Site Address (if different than mailing address)

6. Transporter 1 Company Name: Advanced Chemical Transport Inc /DBA ACTENVIRO
U.S. EPA ID Number: CAR000070540

7. Transporter 2 Company Name
U.S. EPA ID Number

8. Designated Facility Name and Site Address
Advanced Chemical Treatment
6133 Edith Blvd NE
Albuquerque, NM 87107
Facility's Phone: 505 349 5220
U.S. EPA ID Number: NMD002208627

9a. HM	9b. U.S. DOT Description (including Proper Shipping Name, Hazard Class, ID Number, and Packing Group (if any))	10. Containers No.	10. Containers Type	11. Total Quantity	12. Unit Wt./Vol.	13. Waste Codes		
X	1. NA3082 Hazardous waste liquid n o s (Benzene) 9 PGIII		DM		P	D018		
	2.							
	3.							
	4.							

14. Special Handling Instructions and Additional Information
Project Number 165366 Document # 0106806
1) F809171 ACT 76909 KIA
24 HOUR EMERGENCY CONTACT SCOTT CLARK 505 385 3879

15. **GENERATOR'S/OFFEROR'S CERTIFICATION:** I hereby declare that the contents of this consignment are fully and accurately described above by the proper shipping name, and are classified, packaged, marked and labeled/placarded, and are in all respects in proper condition for transport according to applicable international and national governmental regulations. If export shipment and I am the Primary Exporter, I certify that the contents of this consignment conform to the terms of the attached EPA Acknowledgment of Consent.
I certify that the waste minimization statement identified in 40 CFR 262.27(a) (if I am a large quantity generator) or (b) (if I am a small quantity generator) is true.

Generator's/Offeror's Printed/Typed Name: Wayne Kittrell
Signature
Month 08 Day 20 Year 18

GENERATOR

INT'L

16. International Shipments ☐ Import to U.S. ☐ Export from U.S. Port of entry/exit:
Transporter signature (for exports only): Date leaving U.S.:

TRANSPORTER

17. Transporter Acknowledgment of Receipt of Materials
Transporter 1 Printed/Typed Name
Signature
Month Day Year
Transporter 2 Printed/Typed Name
Signature
Month Day Year

DESIGNATED FACILITY

18. Discrepancy
18a. Discrepancy Indication Space ☐ Quantity ☐ Type ☐ Residue ☐ Partial Rejection ☐ Full Rejection
Manifest Reference Number:
18b. Alternate Facility (or Generator)
U.S. EPA ID Number
Facility's Phone:
18c. Signature of Alternate Facility (or Generator)
Month Day Year

19. Hazardous Waste Report Management Method Codes (i.e., codes for hazardous waste treatment, disposal, and recycling systems)
1. 2. 3. 4.

20. Designated Facility Owner or Operator: Certification of receipt of hazardous materials covered by the manifest except as noted in Item 18a
Printed/Typed Name
Signature
Month Day Year

LAND DISPOSAL RESTRICTION NOTIFICATION FORM FOR WASTES SUBJECT TO THE TREATMENT STANDARDS FOUND IN 40 CFR 268

GENERATOR NAME	MANIFEST NUMBER
Kirtland Air Force Base	011074298FLE

Line	TSD Approval	Waste Code(s)	Subcategory	UHC's	NWW or WW	Special Conditions
1	ACT76908	D018	BENZENE		WW	
				1,2-DIBROMOETHANE-0.432MG/L		
				ACETOPHENONE-8.24 MG/L		
				2-BUTANONE-0.591 MG/L		
				4-METHYL-2-PENTANONE-0.665 MG/L		
				ACETONE-2.81 MG/L		
				ETHYLBENZENE-1.35 MG/L		
				NAPHTHALENE-0.148 MG/L		
				TOLUENE-13.9 MG/L		
				XYLENES-5.48 MG/L		
				BENZENE-9.16MG/L(OVER TCLP LIMIT)		

SPECIAL CONDITIONS:

A. Waste Requiring No Further Treatment
B. Lab Pack Waste Qualifying for Alternative Treatment und 40 CFR 268.40
C. Hazardous Waste Debris subject to standard treatment requirements, 40 CFR 268.40
D. Hazardous Waste Debris subject to alternative standards in 40 CFR 268 (list contaminants)
E. Waste Qualifying for Exemption and not subject to Land Disposal Restriction (Explain)
F. Characteristic waste that are subject to the treatment standards in 268.40 (other than those expressed as a required method of treatment) that are reasonably expected to contain underlying hazardous constituents as defined in 268.2(i); are treated on-site to remove hazardous characteristic; and are sent off-site for treatment underlying hazardous constituents (list constituents)
G. Characteristic wastes that contain underlying hazardous constituents as defined 268.2(i) that are treated on-site to remove the hazardous characteristic and the underlying hazardous constituents to levels in 268.48 Universal Treatment Standards.
H. For Chemical Manufacturers, Petroleum Refineries, Coke By-Product Facilities and RCRA TSDF handling wastes subject to 40 CFR 61 subpart FF ONLY. This waste is "Controlled Benzene Waste" which is subject to the notification requirements of 40 CFR subpart FF.
I. Certification for contaminated soil indicating the presence or absence of characteristic and / or listed hazardous wastes.
J. Certification for contaminated soil treated in accordance with 40 CFR 268.49
Waste analysis is attached where available; otherwise the information contained herin is based upon my thorough knowledge of the waste(s).

I hereby certify that I believe that the information I have submitted is true, accurate and complete:

SIGNATURE	TITLE	DATE
[signature]	Physical Scientist	20180628

WASTE STREAMS IDENTIFIED BY SPECIAL CONDITION A
I certify under penalty of law that I personally have examined and am familiar with the waste through analysis and testing or through knowledge of the waste to support this certification that the waste complies with the treatment standards specified in 40 CFR part 268 subpart D and all applicable prohibitions set forth in 40 CFR 268.32 or RCRA section 3004(d). I believe that the information I have submitted is true, accurate and complete. I am aware that there are significant penalties for submitting a false certification, including the possibility of fine and imprisonment.
WASTE STREAMS IDENTIFIED BY SPECIAL CONDITION B
I certify under penalty of law that I personally have examined and am familiar with the waste and that lab pack contains only wastes which have not been excluded under appendix iv to 40 CFR 268. I am aware that there are significant penalties for submitting a false certification, including fine and imprisonment.
WASTE STREAMS IDENTIFIED BY SPECIAL CONDITION F
I certify under penalty of law that the waste has been treated in accordance with the requirements of 40 CFR 286.40 to remove the hazardous characteristic. This decharacterized waste contains underlying hazardous constituents that require further treatment to meet universal treatment standards. I am aware that there are significant penalties for submitting a false certification, including the possibility of fine and imprisonment.
WASTE STREAMS IDENTIFIED BY SPECIAL CONDITION G
I certify under penalty of law that the waste has been treated in accordance with the requirements of 40 CFR 286.40 to remove the hazardous characteristic, and that the underlying hazardous constituents, as defined in 268.2 have been treated on site to the 268.48 Universal Treatment Standards. I am aware that there are significant penalties for submitting a false certification, including the possibility of fine and imprisonment.
WASTE STREAMS IDENTIFIED BY SPECIAL CONDITION I
I certify under penalty of law that I personally have examined this contaminated soil and it [DOES/DOES NOT] contain listed hazardous waste and [DOES/DOES NOT] exhibit a characteristic of hazardous waste and requires treatment to meet the soil treatment standards as provided by 268.49(c).
WASTE STREAMS IDENTIFIED BY SPECIAL CONDITION J

*****ORIGINAL SIGNATURE PAGE TO ACCOMPANY MANIFEST*****

LAND DISPOSAL RESTRICTION NOTIFICATION FORM FOR WASTES SUBJECT TO THE TREATMENT STANDARDS FOUND IN 40 CFR 268

I certify under penalty of law that I have personally examined and am familiar with the treatment technology and operation of the treatment process used to support this certification and believe that it has been maintained and operated properly so as to comply with treatment standards specified in 40 CFR 268.49 without impermissible dilution of the prohibited wastes. I am aware there are significant penalties for submitting a false certification, including the possibility of fine and imprisonment.

*****ORIGINAL SIGNATURE PAGE TO ACCOMPANY MANIFEST*****

PO# 12863662

LIQUID ENVIRONMENTAL SOLUTIONS

92155

NON-HAZARDOUS WASTE MANIFEST

Profile Number
212532

Generator Name	**Name:** Kirtland Air Force base **Phone:** (505) 846-9017	**Generator Address**	**Address:** 2050 Wyoming Blvd, Albuquerque **City:** Albuquerque **State:** NM **Zip:** 87117

Check with your state and local regulatory agencies for manifest retention requirements. NOTE: Many regulatory agencies require records to be kept on-site and available to review for up to 3 years.

Waste Type	☐ Grease Trap ☐ Grit Trap ☐ Septic/Chemical Toilet ☐ Non-Industrial ☐ Industrial ☐ Special ☐ Used Cooking Oil ☐ Recyclable Used Oil

I certify that the waste material removed from the above premises does not contain any radioactive, flammable, explosive, toxic or hazardous material ("Excluded Waste"). The term "hazardous material" is defined as any one or more pollutant, toxic substance, hazardous substance, solvent or oil as defined in or pusuant to the Resource Conservation and Recovery Act, the Comprehensive Environmental Response Compensation and Liability Act, the Federal Clean Water Act, or any other federal, state or local environmental law, regulation, ordinance, or rule, whether existing as of the date of this agreement or subsequently enacted. I also acknowledge that the Generator shall be responsible for any costs incurred by the Transporter or Disposal Facility in handling or proper disposal of any hazardous waste and that the Generator expressly agrees to defend, indemnify and hold harmless the Transporter from and against any and all damages, costs, fines and liabilities resulting from or arising out of any such hazardous waste.

Generator Rep. Name (please print)	Scott Clark	**Generator Rep. Signature**	

Transporter Name	**Name:** Chemical Transport Inc **Phone:** (505) 877-4353	**Transporter Address**	**Address:** 2712 Broadway SE **City:** Albuquerque **State:** NM **Zip:** 87105

Waste Removed (Gallons)	non DOT regulated material 4900 (no haz waste)	**Date**	**Time**
		8/7/17	09 30

I certify that the information above is accurate, and that only the waste certified for removal by the Generator is contained in the servicing vehicle. I am aware that falsification of this manifest may result in prosecution.

Driver Name (please print)	Mike White	**Driver Signature**	

Disposal Facility	Liquid Environmental Solutions of Arizona	**Address**	5159 West Van Buren Street Phoenix, AZ 85043
Waste Received (Gallons)		**Date**	**Time**
Facility Rep. Name (please print)		**Facility Rep. Signature**	

WHITE - Generator Final Copy YELLOW - Liquid Environmental Solutions Copy GOLDENROD - Transporter Copy PINK - Generator 1st Copy

PO# 12863601

LIQUID ENVIRONMENTAL SOLUTIONS

92156

NON-HAZARDOUS WASTE MANIFEST

Profile Number
212532

Generator Name	Name: Kirtland Air Force Base Phone: (505) 846-9017	**Generator Address**	Address: 2050 Wyoming Blvd SE Bldg 20005 City: Kirtland Air Force Base State: NM Zip: 87117

Check with your state and local regulatory agencies for manifest retention requirements. NOTE: Many regulatory agencies require records to be kept on-site and available to review for up to 3 years.

Waste Type	☐ Grease Trap ☐ Grit Trap ☐ Septic/Chemical Toilet ☒ Non-Industrial ☐ Industrial ☐ Special ☐ Used Cooking Oil ☐ Recyclable Used Oil

I certify that the waste material removed from the above premises does not contain any radioactive, flammable, explosive, toxic or hazardous material ("Excluded Waste"). The term "hazardous material" is defined as any one or more pollutant, toxic substance, hazardous substance, solvent or oil as defined in or pusuant to the Resource Conservation and Recovery Act, the Comprehensive Environmental Response Compensation and Liability Act, the Federal Clean Water Act, or any other federal, state or local environmental law, regulation, ordinance, or rule, whether existing as of the date of this agreement or subsequently enacted. I also acknowledge that the Generator shall be responsible for any costs incurred by the Transporter or Disposal Facility in handling or proper disposal of any hazardous waste and that the Generator expressly agrees to defend, indemnify and hold harmless the Transporter from and against any and all damages, costs, fines and liabilities resulting from or arising out of any such hazardous waste.

Generator Rep. Name (please print)	Scott Clark	**Generator Rep. Signature**	

Transporter Name	Name: General Transport Inc Phone: (505) 877-4353	**Transporter Address**	Address: 7717 Broadway SE City: Albuquerque State: NM Zip: 87105

Waste Removed (Gallons)	Non DOT Regulated material 480 Gal (Gen the waste water)	**Date** 8/9/17	**Time** 0945

I certify that the information above is accurate, and that only the waste certified for removal by the Generator is contained in the servicing vehicle. I am aware that falsification of this manifest may result in prosecution.

Driver Name (please print)	Mike Wade	**Driver Signature**	

Disposal Facility	Liquid Environmental Solutions of Arizona	**Address**	5159 West Van Buren Street Phoenix, AZ 85043
Waste Received (Gallons)		**Date**	**Time**
Facility Rep. Name (please print)		**Facility Rep. Signature**	

WHITE - Generator Final Copy YELLOW - Liquid Environmental Solutions Copy GOLDENROD - Transporter Copy PINK - Generator 1st Copy

PO# [illegible]

LIQUID ENVIRONMENTAL SOLUTIONS

92157

NON-HAZARDOUS WASTE MANIFEST

liquid ENVIRONMENTAL SOLUTIONS

Profile Number
712532

Generator Name	**Name:** Ellsworth Air Force Base **Phone:** (605) 946-9017	**Generator Address**	**Address:** 2856 Wyoming Ave **City:** Ellsworth Air Force Base **State:** SD **Zip:** 57117

Check with your state and local regulatory agencies for manifest retention requirements. NOTE: Many regulatory agencies require records to be kept on-site and available to review for up to 3 years.

Waste Type	☐ Grease Trap ☐ Grit Trap ☐ Septic/Chemical Toilet ☒ Non-Industrial ☐ Industrial ☐ Special ☐ Used Cooking Oil ☐ Recyclable Used Oil

I certify that the waste material removed from the above premises does not contain any radioactive, flammable, explosive, toxic or hazardous material ("Excluded Waste"). The term "hazardous material" is defined as any one or more pollutant, toxic substance, hazardous substance, solvent or oil as defined in or pusuant to the Resource Conservation and Recovery Act, the Comprehensive Environmental Response Compensation and Liability Act, the Federal Clean Water Act, or any other federal, state or local environmental law, regulation, ordinance, or rule, whether existing as of the date of this agreement or subsequently enacted. I also acknowledge that the Generator shall be responsible for any costs incurred by the Transporter or Disposal Facility in handling or proper disposal of any hazardous waste and that the Generator expressly agrees to defend, indemnify and hold harmless the Transporter from and against any and all damages, costs, fines and liabilities resulting from or arising out of any such hazardous waste.

Generator Rep. Name (please print)	Scott Clark	**Generator Rep. Signature**	[signature]

Transporter Name	**Name:** General Transport **Phone:** (605) 577-4353	**Transporter Address**	**Address:** 7717 Lincoln Way SE **City:** Mapleton **State:** MN **Zip:** 57165

Waste Removed (Gallons)	Non DOT Regulated material baker tank (EX1) 4800 gal, MW22 [illegible], MW22 [illegible] 12, Non HAZ waste water 13	**Date** 8/11/17	**Time**

I certify that the information above is accurate, and that only the waste certified for removal by the Generator is contained in the servicing vehicle. I am aware that falsification of this manifest may result in prosecution.

Driver Name (please print)	[illegible]	**Driver Signature**	[signature]

Disposal Facility	Liquid Environmental Solutions of Arizona	**Address**	5159 West Van Buren Street Phoenix, AZ 85043
Waste Received (Gallons)		**Date**	**Time**
Facility Rep. Name (please print)		**Facility Rep. Signature**	

WHITE - Generator Final Copy YELLOW - Liquid Environmental Solutions Copy GOLDENROD - Transporter Copy PINK - Generator 1st Copy

PO# W1708688 45

LIQUID ENVIRONMENTAL SOLUTIONS

92159

NON-HAZARDOUS WASTE MANIFEST

Profile Number
212532

Generator Name	Name: Kelly and the Fine Rose Phone: (505) 846-9017	**Generator Address**	Address: 2050 Wyoming Blvd Ste 2 City: Albuquerque State: NM Zip: 87112

Check with your state and local regulatory agencies for manifest retention requirements. NOTE: Many regulatory agencies require records to be kept on-site and available to review for up to 3 years.

Waste Type	☐ Grease Trap ☐ Grit Trap ☐ Septic/Chemical Toilet ☒ Non-Industrial ☐ Industrial ☐ Special ☐ Used Cooking Oil ☐ Recyclable Used Oil

I certify that the waste material removed from the above premises does not contain any radioactive, flammable, explosive, toxic or hazardous material ("Excluded Waste"). The term "hazardous material" is defined as any one or more pollutant, toxic substance, hazardous substance, solvent or oil as defined in or pusuant to the Resource Conservation and Recovery Act, the Comprehensive Environmental Response Compensation and Liability Act, the Federal Clean Water Act, or any other federal, state or local environmental law, regulation, ordinance, or rule, whether existing as of the date of this agreement or subsequently enacted. I also acknowledge that the Generator shall be responsible for any costs incurred by the Transporter or Disposal Facility in handling or proper disposal of any hazardous waste and that the Generator expressly agrees to defend, indemnify and hold harmless the Transporter from and against any and all damages, costs, fines and liabilities resulting from or arising out of any such hazardous waste.

Generator Rep. Name (please print)	Scott Clark	**Generator Rep. Signature**	

Transporter Name	Name: Clean Waters Env Serv Phone: (505) 884-2277	**Transporter Address**	Address: 2720 Eucalyptus NE City: Albuquerque State: NM Zip: 87107

Waste Removed (Gallons)	non haz liquid waste 2360G (non haz waste water)	**Date**	**Time**
		8-17-17	9.00 Am

I certify that the information above is accurate, and that only the waste certified for removal by the Generator is contained in the servicing vehicle. I am aware that falsification of this manifest may result in prosecution.

Driver Name (please print)	John Figueroa	**Driver Signature**	

Disposal Facility	Liquid Environmental Solutions of Arizona	**Address**	5159 West Van Buren Street Phoenix, AZ 85043
Waste Received (Gallons)		**Date**	**Time**
Facility Rep. Name (please print)		**Facility Rep. Signature**	

WHITE - Generator Final Copy YELLOW - Liquid Environmental Solutions Copy GOLDENROD - Transporter Copy PINK - Generator 1st Copy

NON-HAZARDOUS WASTE MANIFEST

Please print or type (Form designed for use on elite (12 pitch) typewriter)

NON-HAZARDOUS WASTE MANIFEST

1. Generator's US EPA ID No. NM9570024423

Manifest Document No. D235372

2. Page 1 of

3. Generator's Name and Mailing Address
KIRTLAND AIR FORCE BASE
2050 WYOMING BLVD SE BLDG 20685, ENVIRONMENTAL
KIRTLAND AIR FORCE BASE, NM 87117

4. Generator's Phone (505-846-9017)

5. Transporter 1 Company Name: Advanced Chemical Transport Inc./DBA ACTENVIRO

6. US EPA ID Number: CAR000070540

A. State Transporter's ID

B. Transporter 1 Phone

7. Transporter 2 Company Name

8. US EPA ID Number

C. State Transporter's ID

D. Transporter 2 Phone

9. Designated Facility Name and Site Address
Advanced Chemical Transport
6133 Edith Blvd NE
Albuquerque, NM 87107
505-349-5220

10. US EPA ID Number: NMD002208627

E. State Facility's ID

F. Facility's Phone

11. WASTE DESCRIPTION	Containers No.	Containers Type	13. Total Quantity	14. Unit Wt./Vol.
Non-RCRA/Non-DOT Regulated Material Liquid (WATER)				
a.		TP		P
b.				
c.				
d.				

G. Additional Descriptions for Materials Listed Above
Project Number 196759 Document #: D235372
1) ACT94913 KIA-

H. Handling Codes for Wastes Listed Above

15. Special Handling Instructions and Additional Information
24 HOUR EMERGENCY CONTACT: SCOTT CLARK 505 385 3679

GENERATOR

16. GENERATOR'S CERTIFICATION: I hereby certify that the contents of this shipment are fully and accurately described and are in all respects in proper condition for transport. The materials described on this manifest are not subject to federal hazardous waste regulations.

Printed/Typed Name: Scott Clark

Signature

Date: Month 03 Day 19 Year 19

TRANSPORTER

17. Transporter 1 Acknowledgement of Receipt of Materials

Printed/Typed Name

Signature

Date: Month Day Year

18. Transporter 2 Acknowledgement of Receipt of Materials

Printed/Typed Name

Signature

Date: Month Day Year

FACILITY

19. Discrepancy Indication Space

20. Facility Owner or Operator: Certification of receipt of the waste materials covered by this manifest, except as noted in item 19.

Printed/Typed Name

Signature

Date: Month Day Year

CF14 © 2002 LABELMASTER® (800) 621-5808 www.labelmaster.com

PRINTED ON RECYCLED PAPER USING SOYBEAN INK PRINTED WITH SOY INK

NON-HAZARDOUS WASTE

American Labelmark Co. - Chicago, IL 60646

ACT environmental services
6133 Edith Blvd. NE
Albuquerque, NM 87107
Phone: (505) 349-5220
Fax: (505) 344-7986

GENERATOR WASTE PROFILE SHEET

A. GENERATOR INFORMATION

Profile Number: ACT76908
Generator US EPA ID: NM9570024423
Phone: 505 853 3484
Fax:
Email:

Generator Name: KIRTLAND AIR FORCE BASE
Mailing Address: 2050 WYOMING BLVD SE BLDG 20685, ENVIRONMENTAL RESTORATION
KIRTLAND AIR FORCE BASE, NM 87117
Site Pick-up Address: 5202 RANDOLPH AVE SE
ALBUQUERQUE , NM 87117
Technical Contact: HOLLY O'GRADY Title: MAIN CONTACT
Name of Waste: WELL WATER CONTAMINATED WITH BENZENE
Process Generating: HAZARDOUS WELL WATER FROM KAFB BFF

NAICS CODE: 928110 **Form Code:** W101 **Source Code:** G39

B. PHYSICAL CHARACTERISTICS OF WASTE AT 25C OF 77F

Physical State: LIQUID **Color:** CLEAR **Clarity:** CLEAR **Phase Separation Number of Layers:** SINGLE **Odor:** NONE

PH: 6 - 8 **Specific Gravity:** 1 - 1 SP.GR. **Flash Point (F):** > 200 F **BTU Value:** BTU/LB NA

C. Chemical Composition / UHC's

BASED UPON: ANALYTICAL(INCLUDED) [X] GENERATOR KNOWLEDGE [ ]

	Range			
1,2-dibromoethane (EDB)	0	-	.432	MG/L
2-butanone (MEK) [HZ]	0	-	.591	MG/L
4-methyl-2-pentanone	0	-	.665	MG/L
Acetone	0	-	2.81	MG/L
Acetophenone	0	-	8.24	MG/L
Benzene	0	-	9.16	MG/L
Ethylbenzene	0	-	1.35	MG/L
Naphthalene	0	-	.148	MG/L
Toluene	0	-	13.9	MG/L
Total Xylenes	0	-	5.48	MG/L
Water	99	-	100	%

D. METALS

	Total (PPM)		EP Toxicity (mg/l)
Arsenic:		Silver:	
Barium:		Copper:	
Cadmium:		Nickel:	
Chromium:		Zinc:	
Lead:		Thallium:	
Mercury:			
Chromium, Hexavalent			
Selenium:			

E. OTHER COMPONENTS

OXIDIZER:		REACTIVE SULFIDES PPM	N
EXPLOSIVE:	N	REACTIVE CYANIDES PPM	N
SHOCK SENSITIVE:	N	WATER/AIR REACTIVE	N
TIRES:	N	THERMALLY UNSTABLE	N
PYROPHORIC:	N	TSCA REG PCB WASTE:	N
RADIOACTIVE:	N	COMPRESSED GASSES:	N
EXEMPT RAD:	N	CERCLA/SUPERFUND:	N
ETHIOLOGICAL:	N	PESTICIDE MANUFACTURING WASTE:	N

HALOGENATED ORGANIC COMPOUNDS PER 40 CFR 268, APPENDIX III
DEBRIS N <500 PPM VOC as generated YES

Subject to NESHAP Regulations
US EPA Hazardous Waste Y
US EPA Hazardous Waste Codes: ; D018

F. Shipping Information:

DOT Hazardous Material YES Exempted NO
Proper Shipping Name: NA3082, Hazardous waste, liquid, n.o.s. (Benzene), 9 , PGIII
Hazard Class: 9
ID #: NA3082
PG: III
Anticipated Volume (Units): 12 DM
Per: QUARTER

G. Special Handling Instructions:

all VOC and SemiVOC listed no analytical on file ESTCP 10-17-17

H. GENERATOR'S CERTIFICATION:
I hereby certify that all information in this and all the attached documents is complete and accurate, and that all known or suspected hazards have been disclosed. I further certify that any samples submitted with this profile are representative of the waste to be shipped and are taken in accordance with SW 846 or other approved procedures. I agree to notify Advanced Chemical Treatment in writing when the process generating this waste stream changes or when I have reason to believe the data contained herein is not complete and accurate.

Signature: Scott Clark Title: Restoration Program Mgr Date: 2-28-18
Print Name: Scott Clark

6133 Edith Blvd. NE
Albuquerque, NM 87107
Phone: (505) 349-5220
Fax: (505) 344-7986

GENERATOR WASTE PROFILE SHEET

A. GENERATOR INFORMATION

Profile Number: ACT94913
Generator US EPA ID: NM9570024423
Phone: 505 846 9017
Fax:
Email:

Generator Name: KIRTLAND AIR FORCE BASE
Mailing Address: 2050 WYOMING BLVD SE BLDG 20685, ENVIRONMENTAL RESTORATION
KIRTLAND AIR FORCE BASE, NM 87117
Site Pick-up Address: 2050 WYOMING BLVD SE
KIRTLAND AIR FORCE BASE , NM 87117
Technical Contact: SCOTT CLARK Title: MAIN CONTACT
Name of Waste Process Generating: WATER GENERATED FROM MONITOR WELLS AT KAFB GROUND WATER MONITORING

NAICS CODE: 928110 **Form Code:** W219 **Source Code:** G49

B. PHYSICAL CHARACTERISTICS OF WASTE AT 25C OF 77F

Physical State: LIQUID **Color:** CLEAR **Clarity:** CLEAR **Phase Separation Number of Layers:** 1 **Odor:** NA

PH: 5 - 9 PH **Specific Gravity:** = 1 SP.GR. **Flash Point (F):** > 200 F **BTU Value:** BTU/LB NA

C. Chemical Composition / UHC's

BASED UPON: ANALYTICAL(INCLUDED) [X] **GENERATOR KNOWLEDGE** [ ]

	Range			
1,2-DICHLOROETHANE	0	-	.0005	MG/L
ACETONE	0	-	.371	MG/L
ACETOPHENONE	0	-	1.82	MG/L
BENZENE	0	-	.221	MG/L
BIS(2-ETHYLHEXYL)PHTHALATE	0	-	.159	MG/L
DIETHYL PHTHALATE	0	-	.00206	MG/L
ETHYLBENZENE	0	-	.185	MG/L
LEAD	0	-	.356	MG/L
TOLUENE	0	-	1.39	MG/L
WATER	100	-	100	%
XYLENES	0	-	.431	

D. METALS

	Total (PPM)		EP Toxicity (mg/l)
Arsenic:		Silver:	
Barium:		Copper:	
Cadmium:		Nickel:	
Chromium:		Zinc:	
Lead:		Thallium:	
Mercury:			
Chromium, Hexavalent			
Selenium:			

E. OTHER COMPONENTS

OXIDIZER:		REACTIVE SULFIDES PPM	N
EXPLOSIVE:	N	REACTIVE CYANIDES PPM	N
SHOCK SENSITIVE:	N	WATER/AIR REACTIVE	N
TIRES:	N	THERMALLY UNSTABLE	N
PYROPHORIC:	N	TSCA REG PCB WASTE:	N
RADIOACTIVE:	N	COMPRESSED GASSES:	N
EXEMPT RAD:	N	CERCLA/SUPERFUND:	N
ETHIOLOGICAL:	N	PESTICIDE MANUFACTURING WASTE:	N

HALOGENATED ORGANIC COMPOUNDS PER 40 CFR 268, APPENDIX III
DEBRIS N <500 PPM VOC as generated YES

Subject to NESHAP Regulations
US EPA Hazardous Waste

US EPA Hazardous Waste Codes: ;

F. Shipping Information:

DOT Hazardous Material NO Exempted YES

Proper Shipping Name: Non-RCRA/Non-DOT Regulated Material Liquid (WATER)

Hazard Class:
ID #:
PG:

Anticipated Volume (Units): 1 DM

Per: YEAR

G. Special Handling Instructions:

ANALYTICAL TABLE SENT FOR WASTE IDENIFICATION

H. GENERATOR'S CERTIFICATION:

I hereby certify that all information in this and all the attached documents is complete and accurate, and that all known or suspected hazards have been disclosed. I further certify that any samples submitted with this profile are representative of the waste to be shipped and are taken in accordance with SW 846 or other approved procedures. I agree to notify Advanced Chemical Treatment in writing when the process generating this waste stream changes or when I have reason to believe the data contained herein is not complete and accurate.

*Signature*_____ *Title* Restoration Program Manager *Date* 3-7-2019

Print Name: Scott Clark

WASTE MATERIAL PROFILE SHEET

Clean Harbors Profile No. CH1555430

A. GENERAL INFORMATION

GENERATOR EPA ID #/REGISTRATION # ***NM9570024423*** GENERATOR NAME: ***Kirtland Air Force Base***

GENERATOR CODE (Assigned by Clean Harbors) ***KI20261*** CITY ***Kirtland Air Force Base*** STATE/PROVINCE ***NM*** ZIP/POSTAL CODE ***87117***

ADDRESS ***2050 Wyoming Blvd. Se Bldg. 20685, Environmenta*** PHONE: **(505) 846-9017**

CUSTOMER CODE (Assigned by Clean Harbors) ***CB11290*** CUSTOMER NAME: ***CB&I Federal Services***

ADDRESS ***2440 Louisiana Blvd NE Suite 300*** CITY ***Albuquerque*** STATE/PROVINCE ***NM*** ZIP/POSTAL CODE ***87110***

B. WASTE DESCRIPTION

WASTE DESCRIPTION: ***Hazardous Groundwater Combined (BULK)***

PROCESS GENERATING WASTE: **Purge Water from Sampling Activities**

IS THIS WASTE CONTAINED IN SMALL PACKAGING CONTAINED WITHIN A LARGER SHIPPING CONTAINER ? **No**

C. PHYSICAL PROPERTIES (at 25C or 77F)

PHYSICAL STATE
- SOLID WITHOUT FREE LIQUID
- POWDER
- MONOLITHIC SOLID
- ✔ LIQUID WITH NO SOLIDS
- LIQUID/SOLID MIXTURE
- % FREE LIQUID
- % SETTLED SOLID
- % TOTAL SUSPENDED SOLID
- SLUDGE
- GAS/AEROSOL

NUMBER OF PHASES/LAYERS

✔ 1 2 3

% BY VOLUME (Approx.)

TOP	***0.00***
MIDDLE	***0.00***
BOTTOM	***0.00***

VISCOSITY (If liquid present)
- ✔ 1 - 100 (e.g. Water)
- 101 - 500 (e.g. Motor Oil)
- 501 - 10,000 (e.g. Molasses)
- > 10,000

COLOR

varies

ODOR
- ✔ NONE
- MILD
- STRONG

Describe:

BOILING POINT °F (°C)
- <= 95 (<=35)
- 95 - 100 (35-38)
- 101 - 129 (38-54)
- ✔ >= 130 (>54)

MELTING POINT °F (°C)
- < 140 (<60)
- 140-200 (60-93)
- > 200 (>93)

TOTAL ORGANIC CARBON
- ✔ <= 1%
- 1-9%
- >= 10%

FLASH POINT °F (°C)
- < 73 (<23)
- 73 - 100 (23-38)
- 101 -140 (38-60)
- 141 -200 (60-93)
- ✔ > 200 (>93)

pH
- <= 2
- 2.1 - 6.9
- ✔ 7 (Neutral)
- 7.1 - 12.4
- >= 12.5

SPECIFIC GRAVITY
- < 0.8 (e.g. Gasoline)
- 0.8-1.0 (e.g. Ethanol)
- ✔ 1.0 (e.g. Water)
- 1.0-1.2 (e.g. Antifreeze)
- > 1.2 (e.g. Methylene Chloride)

ASH
- ✔ < 0.1
- 0.1 - 1.0
- 1.1 - 5.0
- 5.1 - 20.0
- > 20
- Unknown

BTU/LB (MJ/kg)
- < 2,000 (<4.6)
- ✔ 2,000-5,000 (4.6-11.6)
- 5,000-10,000 (11.6-23.2)
- > 10,000 (>23.2)

Actual:

D. COMPOSITION (List the complete composition of the waste, include any inert components and/or debris. Ranges for individual components are acceptable. If a trade name is used, please supply an MSDS. Please do not use abbreviations.)

CHEMICAL	MIN	--	MAX	UOM
1,2-DIBROMOETHANE	0.4320000	--	0.4320000	PPM
2-BUTANONE	0.5910000	--	0.5910000	PPM
4-METHYL-2-PENTANONE	0.6650000	--	0.6650000	PPM
ACETONE	2.8100000	--	2.8100000	PPM
ACETOPHENONE	8.2400000	--	8.2400000	PPM
BENZENE	9.1600000	--	9.1600000	PPM
ETHYLBENZENE	1.3500000	--	1.3500000	PPM
NAPHTHALENE	0.1480000	--	0.1480000	PPM
TOLUENE	13.9000000	--	13.9000000	PPM
WATER	99.0000000	--	100.0000000	%

DOES THIS WASTE CONTAIN ANY HEAVY GAUGE METAL DEBRIS OR OTHER LARGE OBJECTS (EX., METAL PLATE OR PIPING >1/4" THICK OR >12" LONG, METAL REINFORCED HOSE >12" LONG, METAL WIRE >12" LONG, METAL VALVES, PIPE FITTINGS, CONCRETE REINFORCING BAR OR PIECES OF CONCRETE >3")? YES NO

If yes, describe, including dimensions:

DOES THIS WASTE CONTAIN ANY METALS IN POWDERED OR OTHER FINELY DIVIDED FORM? YES ✔ NO

DOES THIS WASTE CONTAIN OR HAS IT CONTACTED ANY OF THE FOLLOWING; ANIMAL WASTES, HUMAN BLOOD, BLOOD PRODUCTS, BODY FLUIDS, MICROBIOLOGICAL WASTE, PATHOLOGICAL WASTE, HUMAN OR ANIMAL DERIVED SERUMS OR PROTEINS OR ANY OTHER POTENTIALLY INFECTIOUS MATERIAL? YES ✔ NO

I acknowledge that this waste material is neither infectious nor does it contain any organism known to be a threat to human health. This certification is based on my knowledge of the material. Select the answer below that applies:

The waste was never exposed to potentially infectious material. YES NO

Chemical disinfection or some other form of sterilization has been applied to the waste. YES NO

I ACKNOWLEDGE THAT THIS PROFILE MEETS THE CLEAN HARBORS BATTERY PACKAGING REQUIREMENTS. YES NO

I ACKNOWLEDGE THAT MY FRIABLE ASBESTOS WASTE IS DOUBLE BAGGED AND WETTED. YES NO

SPECIFY THE SOURCE CODE ASSOCIATED WITH THE WASTE. ***G23*** SPECIFY THE FORM CODE ASSOCIATED WITH THE WASTE. ***W219***

E. CONSTITUENTS

Are these values based on testing or knowledge? Knowledge ☑ Testing

If constituent concentrations are based on analytical testing, analysis must be provided. Please attach document(s) using the link on the Submit tab.

Please indicate which constituents below apply. Concentrations must be entered when applicable to assist in accurate review and expedited approval of your waste profile. Please note that the total regulated metals and other constituents sections require answers.

RCRA	REGULATED METALS	REGULATORY LEVEL (mg/l)	TCLP mg/l	TOTAL	UOM	NOT APPLICABLE
D004	ARSENIC	5.0				☑
D005	BARIUM	100.0				☑
D006	CADMIUM	1.0				☑
D007	CHROMIUM	5.0				☑
D008	LEAD	5.0				☑
D009	MERCURY	0.2				☑
D010	SELENIUM	1.0				☑
D011	SILVER	5.0				☑
	VOLATILE COMPOUNDS					
D018	BENZENE	0.5	*9.1600*			
D019	CARBON TETRACHLORIDE	0.5				
D021	CHLOROBENZENE	100.0				
D022	CHLOROFORM	6.0				
D028	1,2-DICHLOROETHANE	0.5				
D029	1,1-DICHLOROETHYLENE	0.7				
D035	METHYL ETHYL KETONE	200.0				
D039	TETRACHLOROETHYLENE	0.7				
D040	TRICHLOROETHYLENE	0.5				
D043	VINYL CHLORIDE	0.2				
	SEMI-VOLATILE COMPOUNDS					
D023	o-CRESOL	200.0				
D024	m-CRESOL	200.0				
D025	p-CRESOL	200.0				
D026	CRESOL (TOTAL)	200.0				
D027	1,4-DICHLOROBENZENE	7.5				
D030	2,4-DINITROTOLUENE	0.13				
D032	HEXACHLOROBENZENE	0.13				
D033	HEXACHLOROBUTADIENE	0.5				
D034	HEXACHLOROETHANE	3.0				
D036	NITROBENZENE	2.0				
D037	PENTACHLOROPHENOL	100.0				
D038	PYRIDINE	5.0				
D041	2,4,5-TRICHLOROPHENOL	400.0				
D042	2,4,6-TRICHLOROPHENOL	2.0				
	PESTICIDES AND HERBICIDES					
D012	ENDRIN	0.02				
D013	LINDANE	0.4				
D014	METHOXYCHLOR	10.0				
D015	TOXAPHENE	0.5				
D016	2,4-D	10.0				
D017	2,4,5-TP (SILVEX)	1.0				
D020	CHLORDANE	0.03				
D031	HEPTACHLOR (AND ITS EPOXIDE)	0.008				

OTHER CONSTITUENTS	MAX	UOM	NOT APPLICABLE
BROMINE			☑
CHLORINE			☑
FLUORINE			☑
IODINE			☑
SULFUR			☑
POTASSIUM			☑
SODIUM			☑
AMMONIA			☑
CYANIDE AMENABLE			☑
CYANIDE REACTIVE			☑
CYANIDE TOTAL			☑
SULFIDE REACTIVE			☑

HOCs

☑ NONE
< 1000 PPM
>= 1000 PPM

PCBs

☑ NONE
< 50 PPM
>=50 PPM

IF PCBS ARE PRESENT, IS THE WASTE REGULATED BY TSCA 40 CFR 761?

YES ☑ NO

ADDITIONAL HAZARDS

DOES THIS WASTE HAVE ANY UNDISCLOSED HAZARDS OR PRIOR INCIDENTS ASSOCIATED WITH IT, WHICH COULD AFFECT THE WAY IT SHOULD BE HANDLED?

YES ☑ NO (If yes, explain)

CHOOSE ALL THAT APPLY

DEA REGULATED SUBSTANCES	EXPLOSIVE	FUMING	☑ OSHA REGULATED CARCINOGENS
POLYMERIZABLE	RADIOACTIVE	REACTIVE MATERIAL	NONE OF THE ABOVE

F. REGULATORY STATUS

☑ YES ☐ NO USEPA HAZARDOUS WASTE?

D018

☐ YES ☑ NO DO ANY STATE WASTE CODES APPLY?

Texas Waste Code

☐ YES ☑ NO DO ANY CANADIAN PROVINCIAL WASTE CODES APPLY?

☑ YES ☐ NO IS THIS WASTE PROHIBITED FROM LAND DISPOSAL WITHOUT FURTHER TREATMENT PER 40 CFR PART 268?

LDR CATEGORY: ***This is subject to LDR.***
VARIANCE INFO:

☐ YES ☑ NO IS THIS A UNIVERSAL WASTE?

☐ YES ☐ NO IS THE GENERATOR OF THE WASTE CLASSIFIED AS VERY SMALL QUANTITY GENERATOR (VSQG) OR A STATE EQUIVALENT DESIGNATION?

☐ YES ☐ NO IS THIS MATERIAL GOING TO BE MANAGED AS A RCRA EXEMPT COMMERCIAL PRODUCT, WHICH IS FUEL (40 CFR 261.2 (C)(2)(II))?

☐ YES ☑ NO DOES TREATMENT OF THIS WASTE GENERATE A F006 OR F019 SLUDGE?

☐ YES ☐ NO IS THIS WASTE STREAM SUBJECT TO THE INORGANIC METAL BEARING WASTE PROHIBITION FOUND AT 40 CFR 268.3(C)?

☐ YES ☑ NO DOES THIS WASTE CONTAIN VOC'S IN CONCENTRATIONS >=500 PPM?

☐ YES ☐ NO DOES THE WASTE CONTAIN GREATER THAN 20% OF ORGANIC CONSTITUENTS WITH A VAPOR PRESSURE >= .3KPA (.044 PSIA)?

☐ YES ☑ NO DOES THIS WASTE CONTAIN AN ORGANIC CONSTITUENT WHICH IN ITS PURE FORM HAS A VAPOR PRESSURE > 77 KPA (11.2 PSIA)?

☐ YES ☑ NO IS THIS CERCLA REGULATED (SUPERFUND) WASTE ?

☐ YES ☑ NO IS THE WASTE SUBJECT TO ONE OF THE FOLLOWING NESHAP RULES?

Hazardous Organic NESHAP (HON) rule (subpart G) Pharmaceuticals production (subpart GGG)

☑ YES ☐ NO IF THIS IS A US EPA HAZARDOUS WASTE, DOES THIS WASTE STREAM CONTAIN BENZENE?

YES ☑ NO Does the waste stream come from a facility with one of the SIC codes listed under benzene NESHAP or is this waste regulated under the benzene NESHAP rules because the original source of the waste is from a chemical manufacturing, coke by-product recovery, or petroleum refinery process?

YES NO Is the generating source of this waste stream a facility with Total Annual Benzene (TAB) >10 Mg/year?

What is the TAB quantity for your facility? Megagram/year (1 Mg = 2,200 lbs)

The basis for this determination is: Knowledge of the Waste Or Test Data Knowledge Testing

Describe the knowledge :

G. DOT/TDG INFORMATION

DOT/TDG PROPER SHIPPING NAME:

NA3082, HAZARDOUS WASTE, LIQUID, N.O.S., (BENZENE), 9, PG III

H. TRANSPORTATION REQUIREMENTS

ESTIMATED SHIPMENT FREQUENCY ONE TIME WEEKLY MONTHLY QUARTERLY YEARLY ☑ OTHER ***As needed;***

CONTAINERIZED

0-0 CONTAINERS/SHIPMENT

STORAGE CAPACITY:
CONTAINER TYPE:

PORTABLE TOTE TANK BOX|CARTON|CASE

CUBIC YARD BOX DRUM

OTHER: DRUM SIZE:

☑ **BULK LIQUID**

GALLONS/SHIPMENT: ***1500.00 Min -3500.00 Max*** GAL.

BULK SOLID

SHIPMENT UOM: TON YARD

TONS/YARDS/SHIPMENT: ***0 Min - 0 Max***

I. SPECIAL REQUEST

COMMENTS OR REQUESTS:
CBPRS to DR (BULK)

GENERATOR'S CERTIFICATION

I certify that I am authorized to execute this document as an authorized agent. I hereby certify that all information submitted in this and attached documents is correct to the best of my knowledge.I also certify that any samples submitted are representative of the actual waste.If Clean Harbors discovers a discrepancy during the approval process, Generator grants Clean Harbors the authority to amend the profile, as Clean Harbors deems necessary, to reflect the discrepancy.

AUTHORIZED SIGNATURE	NAME (PRINT)	TITLE	DATE
Scott Clark	Scott Clark	Restoration Program Mgr	11-28-17

Addendum

D. COMPOSITION

CHEMICAL	MIN	--	MAX	UOM
XYLENES	5.4800000	--	5.4800000	PPM

G. DOT/TDG INFORMATION

liquid ENVIRONMENTAL SOLUTIONS
Clean. Reliable. Innovative.

UNIFORM WASTE PROFILE

866-694-7327
www.liquidenviro.com

Internal Use Only:
Profile #:
Account #:
Approved ○ Non-Approved ○
Subcategory A ☐ B ☐ C ☐
Waste Code

PROFILE INFORMATION

US EPA ID#: State ID#: NAICS # TCEQ ID#(TX-Only): Analytical Attached MSDS Attached

GENERATOR INFORMATION

Name: Kirtland AFB
Address: 2050 Wyoming Blvd. SE, Bldg. 20685
City: Kirtland AFB State: NM Zip: 87117
Contact: Scott Clark Title: Acting Environmental Restoration Chief
Phone: 505-846-9017 Fax:
Email: scott.clark@us.af.mil

BILLING INFORMATION

Name: Clean Harbors Environmental Services, Inc.
Address: 2720 Girard NE
City: Albuquerque State: NM Zip: 87107
Contact: Brett Perry Title: Field Services Account Manager
Phone: 505-238-2523 Fax:
Email: perry.brett@cleanharbors.com

WASTE QUESTIONNAIRE (CHECK ALL THAT APPLY)

Non-hazardous Waste

	Yes	No	Unknown
1. Is this material a hazardous waste (F, K, U, or P listed) as defined by 40 CFR 261 Subpart D? If yes to the above, identify the listing.	○	●	○
2. Has this material been mixed with a hazardous waste as defined by 40 CFR 261?	○	●	○
3. Does this material exhibit any of the following hazardous waste characteristics? Ignitabilty? (40 CFR Part 261.21)	○	●	○
Corrosivity? (40 CFR Part 261.21)	○	●	○
Reactivity? (40 CFR Part 261.21)	○	●	○
Toxicity? (40 CFR Part 261.21)	○	●	○
4. Does this material contain? Herbicides, pesticides, insecticides?	○	●	○
Dioxins?	○	●	○
Radioactive substances?	○	●	○
Domestic Wastes?	○	●	○
Biohazardous materials?	○	●	○
5 Is the waste derived from an underground storage tank (UST)?	○	●	○
6. If waste is derived from fuel, is the fuel leaded?	○	●	○

Is this a virgin or off-spec product? (If Yes, must include MSDS)

	Yes	No	Unknown
1. Unused Product or Chemical	○	●	○
2. Waste by-product from process	○	●	○
3. Spill Clean Up	○	●	○
4. Planned Site Remediation	○	●	○
5. Representative Sample Provided.	○	●	○

Used Oil (as defined by CFR 279.1)

	Yes	No	Unknown
1. Is this material Used Oil as defined by 40 CFR 279?	○	●	○
2. Has this Used Oil been mixed with hazardous waste?	○	●	○
3. Is the source of the waste a Conditionally Exempt Small Quantity Generator?	○	●	○
4. Does this Used Oil contain chlorinated paraffins? If yes, attach MSDS	○	●	○
5. Does this Used Oil contain TSCA (40 CFR 761) regulated levels of PCB? If yes, list PCB level:	○	●	○
6. Does this Used Oil contain less (<) than or equal to 1,000 mg/L Total Organic Halogens (TOX)? * If no, rebuttal per 40 CFR 279.10(b)(1)(ii) must be included.	○	●	○
7. Is this Used Oil soluble in water?	○	●	○

	Yes	No	Unknown
Petroleum Contact Water (PCW)/Leaking	○	●	○
Underground Storage Tank (LUST) Water	○	●	○
Is the generator a Conditionally Exempt Small Quantity Generator (CESQG)?	○	●	○
Does this waste contain oils, lubricants, coolants or petroleum products	☐	☒	☐

WASTE STREAM COMPOSITION (TOTAL MUST EQUAL 100%)

MajorComponentsConcentrationRange

(Water, Oil, Solid, etc.)	Average	Minumum	Maximum
Decontamination Water		100	100

WASTE DESCRIPTION

Common Name of Waste: Decontamination Water from Well Drilling

Detail Process Generating Waste: (Add additional sheet if necessary) Well drilling

Physical State

○ 100% Solid Without Free Liquid
● 100% Liquid With No Solids
○ Liquid/Solid Mixture

100 % Free Liquid
% Settled Solids
% Total Suspended Solids

Layers

● Single Phase
○ Bi-Layered
○ Multi Layered

ph

○ <2 ○ 8-12.5
○ 2-6 ○ >12.5
● 6-8 ○ N/A

Flash Point

○ <73 F ○ 141-200 F
○ 73-100 F ○ >200 F
○ 101-140 F ● N/A

Specific Gravity

Range: To:

Color

Describe Clear

Odor

● None ○ Mild ○ Strong
Describe:

Viscosity

● Low
○ High
○ Medium

TX-Only Classification

○ Class I
○ Class II
○ Other:

TX-ONLY: PLEASE INDICATE WHETHER ANY OF THE FOLLOWING ARE PRESENT:

○ TCLP Metals — Arsenic, Barium, Cadmium, Chromium, Lead, Mercury, Selenium and Silver
○ TCLP Semivolitiles — (o-Cresol, m-Cresol, p-Cresol, Cresol (total) 2-4 Dinitrotolune, Hexachlorobenzene, Hexacchlorobutadiene, Hexachlorethane, Nitrobenzene, Pentachchloropherol, Pyridine, 2-4-5 Trichlorophenol, and 2-4-6 Trichlorophenol)
○ TCEQ Appendix 1 — (TAC 31, Section 335-Subchapter R) or Total Petroleum Table 1, Constituents Hydrocarbons)
○ TCLP Herbicides/ Pesticides — (Chlordane, 2-4 Endrin, Heptachlor, Heptachlor epoxide, Lindane, Methoxyclor, Toxaphene, and 2-4-5 TP/Silvex)
○ TCLP Volatiles — (Benzene, Carbon Tetrachloride, Chlorobenzene, Chloroform, Methyl Ethyl Ketone, 1-4 Dichlorobenzene, 1-2 Dichloroethane, 1-1 Dichloroethylene, Trichloroethylene, Tetrachloroethylene, and Vinyl Chloride)
○ RCI — (Reactive Cyanide, Reactive Sulfide, Corrosivity, Ignitability

TRANSPORTATION INFORMATION

Method of Shipment: ● Bulk Liquid ○ Bulk Sludge ○ Bulk Solid ○ Drum/Box ○ Other:
Shipment Frequency: ○ One Time ○ Weekly ○ Monthly ○ Quarterly ○ Annually ○ Other:
Anticipated Volume: 2000 - 10,000 gallons

GENERATOR CERTIFICATION AND GUARANTEE - PLEASE READ AND SIGN BELOW

As the generator of the material (waste) described above, I certify that I have provided all relevant information as required by this profile and that the information provided is, to the best of my knowledge and belief, true, accurate and complete. Generator agrees not to deliver or arrange for delivery of any material that does not conform to the waste characterization contained in this profile. I further certify that this material is not a RCRA hazardous waste pursuant to federal, state or local laws and has not been mixed with any chlorinated solvents or any other contaminants including, without limitation, PCBs, pesticides, or other hazardous wastes. If Liquid Environmental Solutions (LES) accepts the material for processing and the material is later determined by LES or any other person to be or contain hazardous waste within the meaning of any federal, state or local law, or contain PCBs in sufficient quantity to render it a TSCA-regulated material, the generator agrees to pay all costs incurred by LES to properly treat, store, dispose or otherwise handle the material and any fines and penalties resulting from LES's handling of generator's material. Generator agrees to promptly notify LES of any change in the composition of the material or process generating the material, and agrees to provide LES with a new Uniform Waste Profile prior to delivering any material to LES that does not conform to the waste characterization contained in this profile. The undersigned is an authorized representative of the generator.

Generator Authorization Signature Date 5-17-17 Print Name and Title Scott Clark, Restoration Program Mgr.