DEPARTMENT OF THE AIR FORCE
377TH AIR BASE WING (AFGSC)

AUG 1 8 2016

Colonel Eric H. Froehlich
377 ABW/CC
2000 Wyoming Blvd SE
Kirtland AFB NM 87117-5000

RECEIVED
AUG 2 2 2016
NMED
Hazardous Waste Bureau

Mr. John Kieling, Bureau Chief
Hazardous Waste Bureau (HWB)
New Mexico Environment Department (NMED)
2905 Rodeo Park Drive East, Building 1
Santa Fe NM 87505-6303

Dear Mr. Kieling

Please find attached the *Operations and Maintenance Plan for the Groundwater Treatment System, August 2016, Bulk Fuels Facility Spill, Solid Waste Management Unit (SWMU) ST-106/SS-111,* Kirtland Air Force Base, New Mexico. This plan has been prepared to summarize the treatment system operation, routine inspections, compliance sampling activities, and release reporting for the Groundwater Treatment System at SWMU ST-106/SS-111.

If you have any question or concerns, please contact Mr. Wayne Bitner at (505) 853-3484 or at ludie.bitner@us.af.mil.

Sincerely

ERIC H. FROEHLICH, Colonel, USAF
Commander

Attachment:
Operations and Maintenance Plan for the Groundwater Treatment System, BFF, August 2016; (2) Hard copies & (2) CDs

cc:
NMED-EHD (Roberts, McQuillan), letter/CD
NMED-HWB (Agnew), letter/CD
NMED-GWQB (Hunter, Pullen), letter/CD
EPA Region 6 (King, Ellinger), letter/CD
SAF-IEE (Lynnes), letter only
AFCEC/CZ (Bodour, Bitner, Clark), letter only
USACE-ABQ District Office (Simpler, Phaneuf, Dreeland, Sanchez, Salazar), letter only
Public Info Repository, Administrative Record/Information Repository (AR/IR) and File

KAFB4440

KIRTLAND AIR FORCE BASE
ALBUQUERQUE, NEW MEXICO

OPERATIONS AND MAINTENANCE PLAN
GROUNDWATER TREATMENT SYSTEM
BULK FUELS FACILITY
SOLID WASTE MANAGEMENT UNIT ST-106/SS-111

August 2016

377 MSG/CEI
2050 Wyoming Boulevard Southeast
Kirtland Air Force Base, New Mexico 87117-5270

KIRTLAND AIR FORCE BASE
ALBUQUERQUE, NEW MEXICO

OPERATIONS AND MAINTENANCE PLAN
GROUNDWATER TREATMENT SYSTEM

BULK FUELS FACILITY
SOLID WASTE MANAGEMENT UNIT ST-106/SS-111

August 2016

Revision 0

Prepared for
U.S. Army Corps of Engineers
Albuquerque District
4101 Jefferson Plaza NE
Albuquerque, New Mexico 87109

REPORT DOCUMENTATION PAGE

Form Approved
OMB No. 0704-0188

Public reporting burden for this collection of information is estimated to average 1 hour per response, including the time for reviewing instructions, searching existing data sources, gathering and maintaining the data needed, and completing and reviewing this collection of information. Send comments regarding this burden estimate or any other aspect of this collection of information, including suggestions for reducing this burden to Department of Defense, Washington Headquarters Services, Directorate for Information Operations and Reports (0704-0188), 1215 Jefferson Davis Highway, Suite 1204, Arlington, VA 22202-4302. Respondents should be aware that notwithstanding any other provision of law, no person shall be subject to any penalty for failing to comply with a collection of information if it does not display a currently valid OMB control number. **PLEASE DO NOT RETURN YOUR FORM TO THE ABOVE ADDRESS.**

1. REPORT DATE *(DD-MM-YYYY)* 05-AUG-2016	**2. REPORT TYPE** Revision 0	**3. DATES COVERED *(From - To)*** 1-JAN-2016 – 15-AUG-2016
4. TITLE AND SUBTITLE Operations and Maintenance Plan Bulk Fuels Facility Solid Waste Management Unit ST-106/SS-111 Kirtland Air Force Base, New Mexico		**5a. CONTRACT NUMBER** W912DR-12-D-0006-DM01 **5b. GRANT NUMBER** **5c. PROGRAM ELEMENT NUMBER**
6. AUTHOR(S) EA Engineering, Science, and Technology, Inc., PBC		**5d. PROJECT NUMBER** 62599DM01 **5e. TASK NUMBER** 1010 **5f. WORK UNIT NUMBER** Not applicable
7. PERFORMING ORGANIZATION NAME(S) AND ADDRESS(ES) AND ADDRESS(ES) EA Engineering, Science, and Technology, Inc., PBC 320 Gold Avenue Southwest, Suite 1300 Albuquerque, New Mexico 87102		**8. PERFORMING ORGANIZATION REPORT NUMBER** Not assigned
9. SPONSORING/MONITORING AGENCY NAME(S) AND ADDRESS(ES) U.S. Army Corps of Engineers–Albuquerque District 4101 Jefferson Plaza Northeast Albuquerque, New Mexico 87109-3435		**10.SPONSOR/MONITOR'S ACRONYM(S)** **11. SPONSOR/MONITOR'S REPORT NUMBER(S)**
12. DISTRIBUTION/AVAILABILITY STATEMENT		
13. SUPPLEMENTARY NOTES		

14. ABSTRACT

This Operation and Maintenance Plan for the Groundwater Treatment System (GWTS) was prepared for the Kirtland Air Force Base Bulk Fuels Facility (BFF), Solid Waste Management Unit ST-106/SS-111 located in Albuquerque, New Mexico. This Plan was prepared in accordance with all applicable federal, state, and local laws and regulations, including the New Mexico Hazardous Waste Act, New Mexico Statutes Annotated 1978, New Mexico Hazardous Waste Management Regulations, and the Resource Conservation and Recovery Act. The GWTS has been installed as an interim measure to collapse and contain the ethylene dibromide (EDB) groundwater plume from the BFF site, in order to protect Albuquerque, Kirtland AFB, and the U.S. Department of Veterans Affairs Medical Center drinking water supply wells. The GWTS currently includes groundwater extraction wells and groundwater treatment using carbon adsorption. Treated groundwater is utilized for irrigation or injected into the aquifer This O&M Plan is intended to assist personnel in successfully operating the GWTS and serves as a resource for equipment information, operational procedures, inspections and maintenance, repairs, recordkeeping, and waste management.

15. SUBJECT TERMS
Bulk Fuels Facility, Solid Waste Management Unit ST-106/SS-111, Interim Measures, RCRA, soil vapor, vadose zone, groundwater sampling, groundwater treatment system operation, granular activated carbon, ethylene dibromide

16. SECURITY CLASSIFICATION OF:			**17. LIMITATION OF ABSTRACT**	**18. NUMBER OF PAGES**	**19a. NAME OF RESPONSIBLE PERSON**
					Devon Jercinovic
a. REPORT UNCLASSIFIED	**b. ABSTRACT** UNCLASSIFIED	**c. THIS PAGE** UNCLASSIFIED	ABSTRACT	1752	**19b. TELEPHONE NUMBER *(include area code)*** 505-715-4248

Standard Form 298
(Rev. 8-98) **Prescribed by ANSI Std. Z39.18**

40 CFR 270.11
DOCUMENT CERTIFICATION
AUGUST 2016

I certify under penalty of law that this document and all attachments were prepared under my direction or supervision according to a system designed to assure that qualified personnel properly gather and evaluate the information submitted. Based on my inquiry of the person or persons who manage the system, or those persons directly responsible for gathering the information, the information submitted is, to the best of my knowledge and belief, true, accurate, and complete. I am aware that there are significant penalties for submitting false information, including the possibility of fines and imprisonment for knowing violations.

ERIC H. FROEHLICH, Colonel, USAF
Commander, 377th Air Base Wing

This document has been approved for public release.

KIRTLAND AIR FORCE BASE
377th Air Base Wing Public Affairs

PREFACE

This Operation and Maintenance Plan for the Groundwater Treatment System (GWTS) was prepared for the U.S. Army Corps of Engineers. It pertains to the Kirtland Air Force Base Bulk Fuels Facility, Solid Waste Management Unit ST-106/SS-111 located in Albuquerque, New Mexico. This Plan was prepared in accordance with all applicable federal, state, and local laws and regulations, including the New Mexico Hazardous Waste Act, New Mexico Statutes Annotated 1978, New Mexico Hazardous Waste Management Regulations, and the Resource Conservation and Recovery Act.

This Plan was updated in accordance with regulatory correspondence between the New Mexico Environment Department Hazardous Waste Bureau and the U.S. Air Force, dated 25 March and 20 May 2016.

The Operations and Maintenance Plan for the GWTS contains the necessary information to conduct operations at the GWTS. Mr. Trent Simpler, PE, is the U.S. Army Corps of Engineers–Albuquerque District Project Manager. The Environmental Restoration Section Chief for this program is Mr. Ludie W. Bitner of Kirtland Air Force Base. Ms. Devon Jercinovic is the EA Project Manager.

Devon Jercinovic, PG, CPG, PMP
Project Manager
EA Engineering, Science, and Technology, Inc., PBC

CONTENTS

Section **Page**

ACRONYMS AND ABBREVIATIONS vi

1. INTRODUCTION 1-1

1.1 Site Description 1-1
1.2 Overall System Description 1-1
1.3 Discharge Requirements 1-2
1.4 Health and Safety 1-2
1.5 Organization and Responsibilities 1-2

2. OPERATION OF THE GROUNDWATER EXTRACTION AND TREATMENT SYSTEM 2-1

2.1 GWTS Operational Approach 2-1
2.2 Groundwater Well Pumps and Flow Control 2-2
2.3 Feed Tank and Pumps 2-2
2.4 Carbon Vessels 2-3
2.5 Treated Water Tank and Pump 2-4
2.6 GWTS Building Containment Sumps 2-5
2.7 Start-Up Sequence 2-5
2.8 Normal Shut Down 2-6
2.9 Emergency Shutdown 2-6

3. INSPECTION AND PREVENTATIVE MAINTENANCE 3-1

3.1 Scheduled Inspection and Maintenance Activities 3-1
3.2 Bag Filter Change Out 3-1
3.3 Maintenance Logs 3-2

4. PROCESS MONITORING 4-1

4.1 Extraction Wells 4-1
4.2 Treatment System 4-1
4.3 Effluent Monitoring 4-2

5. RECORDKEEPING 5-1

5.1 Reporting 5-1
5.2 Equipment Warranties 5-2

6. WASTE MANAGEMENT 6-1

6.1 Bag Filters 6-1
6.2 Monitoring Well Purge Water 6-1
6.3 Backwash Water 6-2
6.4 Depleted GAC 6-2
6.5 GAC Adjustment Solutions 6-3

REFERENCES

APPENDICES

A Regulatory Requirements

B Health and Safety

C Organization and Responsibilities

D Description of GWTS Equipment and Facilities

E Process Drawings and GWTS Equipment/Instrument Location Pictures

F Process-Control Description

G Human Machine Interface Screens

H Design Calculations for Carbon Vessel Media Beds

I GWTS Operations Log Sheets and Record Forms

J Manufacturers' Literature

K Contingency Plan

L Sampling and Analysis Plan

M Waste Characterization Documentation

FIGURES

Figure

1-1 Extent of Ethylene Dibromide Plume

1-2 Site Plan for Groundwater Treatment System

TABLE

Table

2-1 Alarm Conditions, Interlocks, and System Responses

ACRONYMS AND ABBREVIATIONS

%	percent
µg/L	microgram per liter
AFB	Air Force Base
AHA	activity hazard analysis
APP	Accident Prevention Plan
BFF	Bulk Fuels Facility
bgs	below ground surface
GCMP	Golf Course Main Pond
gpm	gallon per minute
GWQB	Groundwater Quality Bureau
GWTS	groundwater treatment system
HDPE	high-density polyethylene
HMI	human machine interface
Hp	horsepower
KAFB	Kirtland AFB
mg/L	milligram per liter
NMAC	New Mexico Administrative Code
NMED	New Mexico Environmental Department
O&M	operations and maintenance
P&ID	piping and instrumentation diagram
PLC	programmable logic controller
PM	Project Manager
PPE	personal protective equipment
psig	pound per square inch gauge
RCRA	Resource Conservation and Recovery Act
USACE	U.S. Army Corps of Engineers
VFD	variable frequency drive
WCH	well control house

EXECUTIVE SUMMARY

This Operation and Maintenance Plan for the Groundwater Treatment System (GWTS) was prepared for the Kirtland Air Force Base Bulk Fuels Facility (BFF), Solid Waste Management Unit ST-106/SS-111 located in Albuquerque, New Mexico. This Plan was prepared in accordance with all applicable federal, state, and local laws and regulations, including the New Mexico Hazardous Waste Act, New Mexico Statutes Annotated 1978, New Mexico Hazardous Waste Management Regulations, and the Resource Conservation and Recovery Act.

The GWTS has been installed as an interim measure to collapse and contain the ethylene dibromide (EDB) groundwater plume from the BFF site, in order to protect Albuquerque, Kirtland AFB, and the U.S. Department of Veterans Affairs Medical Center drinking water supply wells. The GWTS currently includes groundwater extraction wells and groundwater treatment using carbon adsorption. Treated groundwater is utilized for irrigation or injected into the aquifer This O&M Plan is intended to assist personnel in successfully operating the GWTS and serves as a resource for equipment information, operational procedures, inspections and maintenance, repairs, recordkeeping, and waste management.

THIS PAGE INTENTIONALLY LEFT BLANK

1. INTRODUCTION

This Operations and Maintenance (O&M) Plan is for the groundwater treatment system (GWTS) at Kirtland Air Force Base (AFB) in Albuquerque, New Mexico. The GWTS began operation on December 16, 2015. As additional modifications and additions are made to the GWTS, this Plan will be updated to incorporate these changes as they are made.

The GWTS has been installed as an interim measure to collapse and contain the ethylene dibromide (EDB) groundwater plume from the Kirtland AFB Bulk Fuels Facility (BFF) site, in order to protect Albuquerque, Kirtland AFB, and the U.S. Department of Veterans Affairs Medical Center drinking water supply wells. The GWTS currently includes groundwater extraction wells and groundwater treatment using carbon adsorption. Treated groundwater is utilized for irrigation or injected into the aquifer

This O&M Plan is intended to assist personnel in successfully operating the GWTS and serves as a resource for the following:

- Equipment information (one-stop for manufacturer-supplied catalog cuts and O&M manuals)
- Operational procedures
- Inspections and maintenance
- Repairs
- Recordkeeping
- Waste management

This Plan will be kept in the GWTS control room at all times.

1.1 Site Description

Kirtland AFB is located in Bernalillo County in central New Mexico, southeast of the City of Albuquerque and adjacent to the Albuquerque International Sunport. The BFF is located in the northwestern portion of Kirtland AFB and is the source for the Solid Waste Management Unit designated as ST-106/SS-111 that has soil and groundwater monitoring locations on-base and off-base to the north-northwest direction (Figure 1-1).

1.2 Overall System Description

The overall layout of the GWTS is shown on Figure 1-2. The system includes extraction wells located north of Kirtland AFB. The extraction rate from each well will be adjusted to optimize plume containment and collapse of the EDB plume. There are plans to expand number of extraction wells along with a treatment train inside the GWTS. Contaminated groundwater from the wells is pumped through double-walled, high-density polyethylene (HDPE) pipe that includes a leak-detection system to the GWTS. This influent piping is installed under the surface streets and alleys off-base and in existing utility corridors on-base. The conveyance line from well KAFB-106228 runs directly to the treatment system, while the conveyance lines from wells KAFB-106233 and KAFB-106234 run to a well control house (WCH) located inside base property where the groundwater from the two wells is combined into a larger line that runs to the GWTS.

The GWTS is installed in Building 19150 located off Ridgecrest Drive on Kirtland AFB in the former Zia Park housing neighborhood. The system is designed to treat up to 800 gallons per minute (gpm) of groundwater; and the first of two 400-gpm treatment trains has been completed. The existing treatment train includes the following:

- Pre-treatment Feed tank (6,000 gallons)
- Two GWTS feed pumps (200 gpm each)
- Two pre-filters for the carbon adsorbers
- Two carbon vessels (20,000 pounds of carbon each)
- One treated water storage tank (6,000 gallons)
- One treated water-discharge pump (400 gpm)
- Two post-filters for the treated water

The treated groundwater is transported via a single-walled, HDPE pipe to a junction with an existing pipeline leading from well KAFB-7 to the Tijeras Arroyo Golf Course Main Pond (GCMP). During the summer months, the treated water is used for irrigation of the golf course. During the winter months when the demand for irrigation water is low, the majority of the treated water will be reinjected into the aquifer such as well KAFB-7 under approved permits.

1.3 Discharge Requirements

Discharge of the treated water from the GWTS is regulated by the NMED Ground Water Quality Bureau (GWQB). Applicable federal, state, and local permits pertaining to GWTS effluent discharge are included in Appendix A. Treated groundwater will be reinjected to the aquifer and/or discharged to the GCMP or other approved location per applicable permits (i.e., Hazardous Waste Treatment Facility Operating Permit [HWTF Permit No. NM9570024423] and Discharge Permit [DP-1839]). All requirements from the associated applicable permits will be adhered to, such as discharge time limits or flow rates to any specific location.

The treated groundwater discharged from the GWTS must meet the human health standard for contaminants that are listed in Section 20.6.2.3103 of the New Mexico Administrative Code (NMAC), other requirements of the NMED Ground and Surface Water Protection regulations (NMAC 20.6.2) and must comply with any additional approved federal, state, or local permits. Additionally, the treatment system discharge must be routinely monitored to ensure that discharge meets the criteria listed in the Sampling and Analysis Plan (Appendix L). Appendix L also contains the necessary reporting requirements; while Appendix K – Contingency Plan has corrective actions needed in the event of an exceedance of the discharge criteria.

1.4 Health and Safety

The foremost priority in operating the GWTS is to ensure the health and safety of the Operator, visitors, and nearby residents. Activities will follow health and safety guidelines of a USAF or USACE-approved safety plan or other approved safety document. Safety information that applies to GWTS O&M is included in Appendix B.

1.5 Organization and Responsibilities

The organization chart and roles and responsibilities for the operation of the GWTS are included in Appendix C.

2. OPERATION OF THE GROUNDWATER EXTRACTION AND TREATMENT SYSTEM

Descriptions of the GWTS equipment and facilities are included in Appendix D. A flow diagram and piping and instrumentation diagrams (P&IDs) for the GWTS are provided in Appendix E. The GWTS is highly automated and designed for unattended operation. The GWTS control system is programmed to maintain system control during normal operation and to safely shut down the system under fault conditions. The programmable logic controller (PLC) will notify the operators of fault conditions and shutdowns via email. A summary of main alarms is provided in Table 2-1.

This section is intended to provide only an overview of system operation. Appendix F provides a detailed account of the function of all instruments and control elements in the system and the action of all interlocks and shutdowns. Screen capture printouts of the human machine interface (HMI) screens are included in Appendix G. The PLC and HMI are installed in the treatment plant's main control panel (CP-100). Any additional modifications to the GWTS will be incorporated into this O&M Plan at a later date.

2.1 GWTS Operational Approach

Groundwater pumped from the three extraction wells is collected into the GWTS feed tank (TK-110). The GWTS feed pumps (P-112 A/B) transfer the water from the feed tank through the pre-filters (F-112 A/B) and the carbon beds (V-114 A/B) into the treated water tank (TK-116). The treated water discharge pump (P-118) transfers the water through the post-filters (F-118 A/B) and the discharge pipeline to either the GCMP or the injection well. Additional discharge locations may be approved in the future.

The flow rate of groundwater from each of the three extraction wells will be dynamic. As the groundwater elevations rise in the aquifer or EBD concentrations change, adjustments to the extraction well flow rates will be made to ensure plume capture.

The control mode for the feed rate to the carbon vessels depends on the amount of groundwater produced by the extraction wells. The minimum recommended groundwater flow rate into the carbon vessels is 120 gpm, which is high enough to provide uniform flow distribution through the carbon bed. If two extraction wells are online, the flow rate to the system should be over 120 gpm, and the feed rate to the carbon beds will be controlled by the level in the GWTS feed tank (TK-110). The PLC will control the level in the feed tank to between 50 percent (%) and 67% full. This is accomplished by adjusting the speed of the GWTS feed pumps (P-112 A/B) to control the feed rate to the carbon beds. Feed rate to the carbon beds will be matched to the inlet flow from the extraction wells. If only one extraction well is online, groundwater flow to the GWTS may be below 120 gpm. In this case, the PLC will adjust the speed of the GWTS feed pumps (P-112 A/B) to control the feed rate to the carbon beds to 120 gpm, and will cycle the level in the feed tank between 50% and 67% by turning the GWTS feed pumps on and off.

The PLC will control the treated water discharge rate to maintain the level in the treated water tank (TK-116) to between 50% and 67%. If the groundwater extraction rate is below 120 gpm and the GWTS feed pumps (P-112 A/B) are cycling on and off, the PLC will also have to cycle the treated water discharge pump (P-116). If groundwater flow rate is higher than 120 gpm, the PLC will control the level in the treated water tank between 50% and 67% full. This is accomplished by adjusting the speed of the treated water discharge pump (P-116) to control the discharge rate to the golf course or injection well. The discharge rate will be very close to the inlet flow from the extraction wells.

2.2 Groundwater Well Pumps and Flow Control

The P&IDs for the groundwater well pumps are shown on drawings 400001 and 400006 in Appendix E. Sections 3.2 and 3.4 of the Process Control Description in Appendix F describe the control of the well pumps, and the interlocks and shutdowns associated with the well pumps and well vaults. Flow rates for each individual well pump are controlled manually by the GWTS Operator. The Operator will use the HMI settings to adjust the position of a motor-operated vee-ball control valve to maintain that flow rate. Under normal conditions, well pumps are typically started by the auto-start switch in the HMI. Well pumps will not start and, if running, will be shut down under the following conditions:

- Low water level in the well
- Low current draw by the pump (for P-101 only, indicating run-dry condition)
- Leak detection in any well vault or pipeline annulus associated with the well
- High-high water level in the GWTS feed tank
- High-high water level in the GWTS building sump
- Loss of power or other fault condition at the GWTS
- High-high water level in the WCH containment (for KAFB-106233 and KAFB-106234)

Manual start/stop switches for the well pumps are available in the HMI and also in the electrical shed at well KAFB-106228 and at the WCH for KAFB-106233 and KAFB-106234. These local switches may be used for maintenance and troubleshooting pump problems. As noted earlier, VFD drives will be installed on the well pumps for KAFB-106233 and KAFB-106234 during Q3 2016, and the O&M Plan will be revised.

2.3 Feed Tank and Pumps

The P&IDs for the GWTS feed tank and feed pumps are shown on drawing 400002 in Appendix E. Sections 3.3.1 and 3.3.2 of the Process Control Description in Appendix F describes the control of the GWTS feed pumps, and the interlocks and shutdowns associated with the feed tank, pumps, and pre-filters. The GWTS feed pump and the level in the GWTS feed tank are controlled by the PLC. The only operator action required is to put the control for the feed pump into AUTO using the HMI. The control scheme for the level control in the feed tank and the flow rate from the feed tank to the carbon vessels (as measured by FIC [flow indicating controller] 3102) is described in Section 3.1 and in the Process Control Description (Sections 3.3.1 and 3.3.2 of Appendix F). Manual on/off switches for the GWTS feed pumps in the HMI and in the VFD panel are provided for maintenance and troubleshooting. The GWTS feed pumps are interlocked to shut down under the following conditions:

- High-high level in treated water storage tank
- High-high level in GWTS building sump
- Low-low level in GWTS feed tank
- High pump-outlet pressure
- High inlet pressure to the carbon vessels

The pre-filters on the GWTS feed pump skid do not have automatic controls but are equipped with differential pressure gauges. If pressure drop across the filters increases to 5 to 8 pound per square inch (differential pressure), the filters should be changed. If plugging occurs in the bag filters or a valve in the outlet piping is inadvertently shut, a deadhead situation could occur at the pump. To prevent a no-flow (deadhead) condition, a high-pressure switch is installed on the pump discharge. The switch shuts down the pump, and alerts the operator. High-pressure set points are detailed in Appendix F.

2.4 Carbon Vessels

The P&IDs for the carbon vessels are shown on drawing 400003 in Appendix E. The only automatic control for the carbon vessels is a high-pressure switch on the inlet to the system. High inlet pressure to the carbon beds will shut down the GWTS feed pump. In order to prevent air from building up in the inlet piping and to prevent siphoning of water from the carbon beds, there are air/vacuum relief valves on the inlet and outlet piping into the vessel valve manifold. A pressure relief valve and manual air vent valve are installed on the top head of each carbon vessel. During initial startup and once each week, the operator should crack the manual vent valve to remove any air that may have accumulated in the carbon vessel. In order to monitor pressure drop across the two carbon beds, each carbon vessel is fitted with a local pressure gauge on its outlet nozzle, and there is also one on the inlet branch of the valve manifold. At a feed rate of 400 gpm, the pressure drop through each carbon bed should be less than 2 pounds per square inch gauge (psig), and the total system pressure drop should be less than 5 psig. The carbon beds should be backwashed if the pressure drop increases by 5 to 10 psig and removal of EDB is decreased.

Each of the carbon vessels is sized to provide 12 minutes of empty bed contact time at 400 gpm. With this extended contact time, the first carbon vessel, or lead carbon bed, can lower the EDB concentration in 400 gpm of groundwater from 2 micrograms per liter (µg/L) to below the discharge limit and maximum contaminant level of 0.05 µg/L. The second carbon vessel, or lag bed, provides a back-up. When the first carbon bed shows EDB reaching 90% of the drinking water standard, that carbon vessel will be switched and the lag carbon vessel will be placed in lead position while a GAC change-out is scheduled for the former lead carbon vessel. Valve alignment figures for the carbon beds are included in Appendix E. These figures show valve alignment for operation of the carbon beds in lead-lag configuration with either bed in the lead position. Valve alignment for operation with both beds online in parallel configuration, single-bed operation, and backwash and carbon load are also included on the figures.

At the ethylene dibromide influent design concentration of 2 µg/L, the carbon consumption is estimated to be 500 to 1,000 pounds per year. Design calculations are included in Appendix H. Since there are 20,000 pounds of carbon in each carbon vessel, the carbon beds may have to be changed due to plugging or fouling before they are loaded with EDB. It is not uncommon to change carbon on a yearly or bi-annual basis to avoid problems with fouling or slow loss of carbon-adsorption capacity. If other organics such as benzene, toluene, xylenes, or gasoline- or diesel-range hydrocarbons occur in the groundwater from an extraction well, they will be removed by the carbon and will reduce bed life. During Q4 2015, the EDB concentration of the groundwater from extraction well KAFB-106228 and in samples of well development water from the new extraction wells KAFB-106233 and KAFB-106234 have been below 0.20 µg/L. Removal of EDB from this level down to the drinking water standard can be accomplished with only one carbon bed online, but approval by the NMED would be required to operate in this mode.

Based on the performance of the temporary treatment system, on analyses of the groundwater from KAFB-106228, and from monitoring wells that are in the vicinity of the three extraction wells, the mineral (iron, manganese, and calcium carbonate) concentration in the combined groundwater fed from these three wells to the carbon beds is expected to be low. Scaling or formation of mineral deposits in the carbon beds is not expected to be a problem. A yearly or biannual carbon change should keep pressure drop in the carbon bed to acceptable levels.

If the operation of the GWTS pulls in groundwater with higher iron and manganese from the upgradient area of the plume, it is possible that scaling and plugging of the carbon beds may become an operational problem. The valve manifold for the carbon beds allows for backwashing of each bed to remove scale and fouling and to reduce pressure drop. Since carbon has little capacity to remove manganese, once the manganese concentration in the influent exceeds the discharge criteria of 0.200 mg/L, the GWTS will have to be shutdown, or pre-treatment for manganese will be required. Manganese removal may be

needed to meet discharge criteria before manganese levels are high enough to cause fouling or plugging of the carbon. Since the manganese plume is well ahead of the dissolved iron plume, iron is not expected to be a problem before manganese exceeds discharge criteria.

Before initial startup and following each carbon change-out (prior to re-start), the beds must be backwashed. The backwashing procedure is covered in the TIGG O&M Manual, and valve alignment figures for this operation are provided in Appendix E. During carbon change-out, the operator should perform an internal inspection when the vessels are empty to determine if there is plugging or damage of the inlets, distribution manifold, and feed or drain lines. Clean water from the plant hose connections can be pushed into the vessel where visual checks can be made of all internal components. Backwashing the carbon beds requires at least 700 gpm of clean water, which can be provided from the fire hydrant near the GWTS building. Rental of storage tanks to contain backwash water and a transfer hose will be required. If the concentrations of iron and manganese in the water fed to the GWTS are so high that the carbon beds need more than a quarterly or semi-annual backwash, or the effluent concentrations for these metals exceed discharge criteria, pre-treatment to remove these compounds will have to be considered.

2.5 Treated Water Tank and Pump

The P&IDs for the treated water tank and discharge pump are shown on drawings 400004 in Appendix E. Sections 3.3.1 and 3.3.3 of the Process Control Description in Appendix F describe the control of the discharge pump, and the interlocks and shutdowns associated with the tank, pump, and post-filters. The treated water discharge pump and the level in the treated water tank are controlled by the PLC. The only operator action required is to put the control for the treated water pump into AUTO using the HMI. The control scheme for the level control in the treated water tank, and the flow rate of treated water from the storage tank to the GCMP or injection well (as measured by FIC [flow indicating controller] 3108), is described in Section 2.1 and in the Process Control Description (Sections 3.3.3 and 3.5 of Appendix F). Manual on/off switches for the treated water pumps in the HMI and in the motor starter panel are provided for maintenance and troubleshooting. The treated water discharge pumps are interlocked to shut down under the following conditions:

- High-high level in the GCMP or the injection well
- High-high level in GWTS building sump
- Low-low level in treated water storage tank
- High pump-outlet pressure
- High pressure at the injection well

The post-filters on the treated water discharge pump skid do not have automatic controls but are equipped with differential pressure gauges. If pressure drop across the filters increases to 10 to 15 pound per square inch (differential pressure), the filters should be changed.

On the treated water discharge line, between the post-filters and the underground effluent pipeline leaving the building, there are two motor-operated valves that can be used to fill tank trucks with treated water from the discharge pump. This water could be used on-base for dust control. The hand switch to operate this valve is located outside of the GWTS building in the truck bay. The switch is keypad-operated, and the GWTS operator will have the operating code. A timer on this switch will return the valves to their normal position if they are left in the “truck fill” position too long. Supplying treated water for dust suppression is a future option that will not be implemented until additional administrative controls are developed.

2.6 GWTS Building Containment Sumps

A drain and sump in the GWTS building floor slab will collect any spills, leaks, or wash-down water. The sump pump (P-111) is a submersible centrifugal pump used to empty the sump into the GWTS feed tank. This pump is controlled by a manual start-stop located at the pump and by level switches in the sump. A high-high level switch will shut down the GWTS system if the water level in the sump is too high. A sump is located outside of the building in the truck bay; this sump also has a high-high level switch that will shut down the GWTS system if the water level in this sump is too high.

2.7 Start-Up Sequence

Prerequisites for normal startup of the GWTS system include the following:

- Perform the valve lineup for normal operation as shown on the P&IDs for the GWTS (Appendix E).
- Confirm that no maintenance activities are occurring at the extraction wells, the golf course, or the injection well.
- Confirm communication (telemetry) with the WCH, GCMP, and well KAFB-7.
- Place local disconnects for pumps in the closed position.
- Place local switches for the well pumps, the GWTS feed pumps, and the treated water pump in the AUTO position.
- Confirm that manual valves on the KAFB-7 pipeline are set to send the treated water to the desired destination (GCMP or KAFB- 7).
- If treated water is to be pumped to KAFB-7, confirm that the hydraulic pump control panel for the V-smart valve is powered and in the AUTO setting.

At the HMI, perform the following checks and set-up steps:

- Check the control panel to ensure all well pump permissives are clear.
- Check the control panel to ensure GWTS feed pump permissives are clear. Set pump(s) into AUTO.
- Check the control panel to ensure treated water discharge pump permissives are clear. Set treated water discharge pump into the AUTO position at the HMI.
- Set flow rates for the groundwater extraction wells to the values specified by the GWTS Project Manager (PM).
- If groundwater flow is expected to be less than 200 gpm, select one of the GWTS feed pumps to be in operation by putting it into AUTO. The switch for the other feed pump will be left in the off position.
- If groundwater flow rate is expected to be less than 120 gpm, set the control mode for the GWTS feed pump VFD to “Flow.” If the groundwater flow rate is expected to be above 120 gpm, set VFD control mode to “TK-110 Level.”

To initiate system start, complete the following steps:

- Start first well pump using the start switch in the HMI. Wait until the flowmeter and level in the GWTS feed tank confirms groundwater flow into the treatment system. Confirm that the PLC starts the GWTS feed pump(s).
- Start the second well pump. When flow is confirmed, start the third well pump.
- Confirm the GWTS feed pump and discharge pump are in operation.
- Confirm normal operation of all equipment.

2.8 Normal Shut Down

When it is necessary to shut the entire system down, perform the following:

- Using the HMI, turn off the extraction well pumps. If the well pumps are expected to be shut down for more than 24 hours, put the manual switches in the WCH and the electrical shed at KAFB-106228 into the off position. Open the electrical disconnects at those locations and lock them open.
- Confirm that the PLC shuts down the GWTS feed pump and treated water discharge pump.
- If treated water was going to KAFB-7 for injection, use the HMI to close the downhole control valve (V-smart valve) at KAFB-7.
- If the system is going to be down for more than 24 hours, put the local switches on the motor starter panel for the GWTS feed pumps and the treated water pump into the off position.

2.9 Emergency Shutdown

In case of fire, leak, or other emergency condition, hit one of the local emergency shut down buttons, or the shut down button on the control panel, and notify the GWTS PM immediately, who will notify the appropriate Kirtland AFB contacts as described in the Contingency Plan (Appendix K).

If a power outage occurs, then a shutdown of the system will occur. The operator will be notified of the shutdown condition. Upon power returning, the system will automatically restart. Further information about the control of the system is explained in Appendix F.

3. INSPECTION AND PREVENTATIVE MAINTENANCE

This section presents instructions for routine inspection and normal equipment servicing and lubrication. The purpose of preventative maintenance is to ensure steady operation and to extend life of equipment. The following text summarizes inspection and preventative maintenance frequencies and actions. If there are any questions, the reader should reference the pertinent vendor or manufacturer information and manuals that are provided in Appendix J, which will be kept at the GWTS control room. Appendix C provides an organization chart and roles and responsibilities for system operation.

If an operator-initiated system shutdown is needed for routine maintenance, non-routine maintenance, or any other nonemergency reason, the GWTS PM must be contacted, and they will notify the designated Kirtland AFB points of contact. The NMED point(s) of contact will be notified for any shutdowns of longer than 24 hours.

For all maintenance activities, the operator should always review the appropriate USAF, USACE, or other approved health and safety documents which are available on site, and follow the requirements for additional personal protective equipment, equipment lock-out/tag-out, confined space entry, fall protection equipment, etc. Additional safety documentation for maintenance operations will be developed on an as-needed basis and will be on file in the GWTS building. These requirements should always be considered prior to initiating the task. The plant operators will perform maintenance tasks that do not require factory-authorized service on a routine basis. If factory-authorized service is required, it will be pre-scheduled to ensure minimal disruption of the plant-operating schedule.

3.1 Scheduled Inspection and Maintenance Activities

Forms located in Appendix I summarize inspections and preventative maintenance actions for the equipment in the GWTS. In general, the overall system does not have extensive preventative maintenance requirements. Most equipment requires inspection with periodic cleaning and repair as needed. The only recurring routine preventative maintenance operations are to change the oil in the groundwater feed pumps and the treated water discharge pump every 3 months, and to change the air filter on the air conditioner for the control room every 3 months. Requirements for calibration and inspection of flowmeters that measure groundwater feed and discharge flow rates are covered in the inspection forms found in Appendix I.

3.2 Bag Filter Change Out

Bag filters will require replacement as-needed to correct a pressure drop. Two bag filter housings are located on each skid, this allows for continuous operation of the plant during bag filter change out. Once the GWTS operator has deemed that a change out is required the system will remain on and the operator will isolate the filter housing needing change out. The filters will be replaced and the offline filter housing will be reinstated into the treatment train. In the event that both bag filter housings on one skid require change out the entire system may be shut down to avoid unnecessary strain on the system.

To change the filters, all flow is directed to one of filter vessels while the first other filter vessel is changed out. The air vent and drain valves are opened to drain the top half of the filter. After the head bolts are loosened, the davit jack is used to raise the filter lid and swing it out of the way. The filter bags can then be removed and replaced. The O-ring on the top of the filter vessel would then be inspected to make sure it is aligned properly. The lid is then swung back into place and the head bolts tightened. Head bolts on opposite sides of the lid should be alternately tightened. Do not overtighten the bolts, and inspect the filter for leaks on restart. The flow is then routed to the filter vessel with new bags and the

procedure repeated in the second filter vessel. After replacing the old filter bags with new filter bags, the old filter bags will be disposed as described in Section 3.2.

Disposal procedures of the used bag filters can be found in Section 6 and characterization information can be found in Appendix M.

3.3 Maintenance Logs

The operators will maintain logs that will document and record all routine and non-routine maintenance activities. Forms used for recording general inspection, calibration of instruments, maintenance, and repair of equipment can be found in Appendix I. An example log sheet for lock–out/tag-out activities that may be required for equipment maintenance and repair activities is present in Appendix I. Additionally, any records for repair of equipment (service invoices, spare parts orders and invoices, service reports) will be retained in an equipment file for individual pieces of equipment. There are separate forms for maintenance and calibration of flowmeters in Appendix I. The operating contractor will maintain hard copies of these records on site in the GWTS building control room or the contractor's office. If hard copies of records are kept off site, electronic copies of the maintenance records will be available to the operator at the GWTS.

4. PROCESS MONITORING

This section provides an overview of the monitored operating parameters and sampling used to determine the performance of the carbon treatment system and quality of treated water discharged to the GCMP or injection well. The full requirements for sampling and analysis are covered in the Sampling and Analysis Plan, which is included in Appendix L. The results of the process monitoring sampling will be used to evaluate performance of the carbon beds and determine if the online beds require carbon change-out. The analytical results will be reviewed to confirm that the contaminant concentrations meet the discharge criteria provided in Appendix L:

Analytical results will be reported to the NMED Hazardous Waste Bureau as required in any approved permit. Each reporting event will consist of a Data Quality Summary Report and laboratory data packages. These two components will be submitted to with validated results. For details on sampling and analysis procedures refer to the Sampling and Analysis Plan (Appendix L). The Sampling and Analysis Plan includes laboratory testing requirements and the achievable laboratory limits.

Operational parameters for the treatment system are monitored by the data logging card in the PLC. The data logger will record the output of automated flow and level instruments communicating with the PLC. The logger will also record alarms and operating time totals for the feed pumps. These data will be downloaded monthly into a spreadsheet and used to generate a summary report. Run times will be recorded on the run logs provided in Appendix I.

4.1 Extraction Wells

The water level in the well casing, pump status, and groundwater flow rate at the three extraction wells will be monitored and recorded by the PLC as part of normal process monitoring. Laboratory analysis samples will be collected in accordance with the Sampling and Analysis Plan located in Appendix L. In addition to the information collected by the data logger, the operators will record the readings of the local instruments in the well vault for KAFB-106228 and in the WCH for wells KAFB-106233 and KAFB-106234. These include the dial thermometer and pressure gauge at the wellhead for KAFB-106228 (PI-3001 and TI-3001) and pressure gauges in the WCH for KAFB-106233 and KAFB-106234 (PI-7003 and PI-7004). These readings will be recorded at least once per week using Forms from Appendix I.

The extraction well pumps are manufactured for long life through proper installation and monitoring. Removing the extraction well pumps for inspection or cleaning on a regular basis is not cost effective and should be evaluated based on trending data of flow decreasing, amperage draw increases from the motor, or general fouling (possibly biological) experienced by the remainder of the system. Based on the high cost to remove the pump for inspection, a 10-year minimum period should pass before pulling and inspection of the submersible pump in the absence of documented performance issues. During this event, whether at normal frequency or due to operating conditions, the pump should be inspected along with wiring, check valves, couplings, riser pipe, and any other downhole instrumentation.

4.2 Treatment System

As noted above, all GWTS operational parameters from instruments will be recorded by the data logger. These parameters include levels in the tanks and flow rate of groundwater into the carbon beds, and flow of treated groundwater pumped to the GCMP and the injection well. In addition to the PLC data, the operators will record the readings of the differential pressure gauges on all four of the bag filters (PDI-112 A/B and PDI-116 A/B) and record the inlet and outlet pressure gauge readings on both carbon beds (PI-3104 A/B, PI-3105). The operator shall also record the totalizer reading on the flow meter to the

dust-control fill hydrant. These readings will be recorded on a daily basis on Forms in Appendix I. All data from the GWTS, including run data gathered from the wells, WCH, vaults, and treatment plant operation logs, maintenance, and regular inspections, will be reviewed quarterly by project engineering personnel. This review will identify trending details of the performance of wells, pumps, and treatment equipment.

4.3 Effluent Monitoring

Additional effluent monitoring will be required following any significant change that could potentially impact the effectiveness of the treatment train. In the event of such a change, treated water discharged to the GCMP or injection well will be sampled and analyzed for the contaminants noted in Appendix L in accordance with the sampling intervals described therein.

5. RECORDKEEPING

Records of the GWTS operations, maintenance, and monitoring are used by operating personnel, management, and appropriate regulatory agencies. The proper collection and archiving of information is important as plant operations will continue for years. These records are used to establish a baseline and history of the performance of the GWTS. Records may be used for the following reasons:

- To evaluate plant performance
- To assist in troubleshooting operational problems at the GWTS
- To ensure the preventative maintenance schedule is performed
- To support budget needs for operations and to prepare annual budgets for the GWTS
- To provide information for reports for the NMED
- To comply with relevant permits and regulations

Records are maintained on site in the GWTS building control room, and electronic copies of the records will be maintained in the GWTS contractor's office. Records will include hard copies of the O&M log sheets included in Appendix I, and computerized operating records (with data collection and data entry into spreadsheets or database software). Copies of reports will also be available on site and at the operations contractor's office. Waste characterization and generation records will be maintained on site in the GWTS building, including notifications for disposal in accordance with Kirtland AFB RCRA Permit Part 2, Section 2.6.6.

5.1 Reporting

The GWTS Operator will submit quarterly and annual reports, as required, to Kirtland AFB for review, approval, and submittal to the NMED. The reports are data summaries with some discussion of operating issues and analytical summaries. The reports should include the following:

- Average, daily groundwater extraction rates for individual wells and total monthly volumes
- Groundwater feed rates and total volume to the carbon treatment system
- Percent uptime
- Equipment maintenance activities, repairs, and modifications (beyond routine inspections)
- Summary of shutdown and alarm events from the PLC or other means
- O&M issues that contributed to significant downtime for the GWTS
- Granular-activated carbon and bag filter change-out quantities and dates
- Sampling and analytical data for the report period, including laboratory and data quality reports

The reports on the performance of the GWTS will be incorporated into the Quarterly Reports.

The Operator of the GWTS will make any required notifications to the GWTS PM, who will then notify Kirtland AFB, who will then make any required regulatory notifications to the NMED. Specific to the discharge requirements, the Operator will provide validated monitoring data in the Quarterly Reports to the NMED.

The system performance will routinely need to be evaluated by a qualified engineer and/or hydrologist. Well performance parameters (flow rates, drawdown, changes in water chemistry, as well as performance of the carbon beds and mechanical and electrical systems) will be evaluated quarterly. Trending data can be incorporated from sampling, run logs, maintenance activities, and operator feedback. The evaluations will be included in the quarterly report for review and direction for further maintenance or optimization of the system and its components.

5.2 Equipment Warranties

Manufacturer's warranties for other equipment are included with the manufacturers' information in Appendix J.

The operations contractor will monitor system performance and identify additional spare parts based on assessing the likelihood of component failures and consequences. Contractors for construction and installation of the GWTS components have provided guarantees that all work and services performed are in accordance with accepted standards and practices. These contractors have also guaranteed that all equipment and materials are furnished against defects in construction and/or workmanship for a period of 1 year following completion of its work and acceptance.

6. WASTE MANAGEMENT

On-site waste management will be performed by the GWTS Operator or other designated waste management person. Bag filters, purge water from monitoring wells, backwash water, depleted GAC, and pH adjustment solutions are the primary waste items requiring management at the GWTS facility. All waste requiring specialized disposal will be disposed of in accordance with applicable permits.

6.1 Bag Filters

Spent bag filters will be produced after any bag filter change out occurs. The bag filters will be dried prior to disposal and disposed of as non-hazardous solid waste, supporting documentation for this decision can be found in Appendix M.

6.2 Monitoring Well Purge Water

All groundwater generated during either well development or routine groundwater monitoring events will be 100 percent captured and contained during generation. The following categories of water are discussed in the paragraphs below:

- **Non-hazardous water** generated from:
  - Purging wells prior to sampling for which the sampling data for two consecutive preceding sampling events document no contaminants present at concentrations that met the definition of characteristic hazardous waste (40 Code of Federal Regulations [CFR] Part 261).

- **Hazardous/potentially hazardous water** generated from:
  - Purging wells during sampling events for which any data from two consecutive preceding sampling events document contamination is present at concentrations that exceed the characteristic hazardous waste toxicity criteria (40 CFR Part 261.24).
  - Purge water from wells for which historical data show water quality fluctuating between non-hazardous and hazardous classification.
  - Purge water that had concentrations relatively close to the regulatory standard in 40 CFR part 261.24; for example, water that exhibited benzene above 0.4 milligrams per liter in at least one of the previous 2 event.
  - Decontamination water from equipment cleaning across all hazardous or potentially hazardous well activities.

- **Water of unknown quality** generated from development, decontamination, and sampling of new wells, for which data are not available for two sampling events.

6.2.1 Non-Hazardous Water

Based on the previous sampling data as described above, non-hazardous water generated from well sampling activities will not require segregation either at the point of generation or while in storage.

Fluids purged or generated at these wellheads will be discharged to the GWTS through the sump in the building floor. The quantity of water purged from each well and the total quantity of water transferred to the GWTS will be recorded. A minimal amount of fines is anticipated to be present in this water and pre-filtering before batching into the GWTS is not anticipated. At the discretion of the GWTS Operator, the unfiltered purge water may be run through a 50 micron bag filter as a pretreatment step.

If for any reason the GWTS cannot accept the purge water as it is generated (e.g., shut down for maintenance), the water will be temporarily stored in the Investigation Derived Waste area on pallets and properly labeled until it can be discharged to the GWTS sump.

6.2.2 Hazardous/Potentially Hazardous Water

Based on the previous quarterly sampling event as described above, characteristically hazardous water generated from well sampling activities will be kept segregated by point of origin both during transport and in storage. Upon generation, the water will be placed in dedicated drums and transported to the 90-day storage facility where the drums will be labeled and stored pending laboratory analytical results. The storage containers will not be discharged to the GWTS. This water will be profiled for disposal based on the analytical data from the sample collected from the well purged. Water generated from purging of new wells, due to undocumented water quality, will be treated the same way as the hazardous water until proven that it is non-hazardous. The quantity of water purged from each well will be recorded.

6.2.3 Water of Unknown Quality

Water of unknown quality associated with drilling activities will initially be placed in portable tanks located at the wellhead where it is produced. The fines will be allowed to settle before the water will be transported, on a daily basis, using vacuum trucks from the wellhead to a centralized storage area where it will be pumped in storage tanks. The quantity of water extracted during development of each well and the total quantity of water transferred into the storage tank will be recorded. Upon conclusion of the development or when the storage tank reached capacity, one (1) water sample will be collected from a spigot situated at the bottom of the tank; proper disposal will take place upon receipt of analytical results. Upon receipt of the analytical results confirming that the water is non-hazardous, it will be batched through the GWTS building. A pre-filter to capture fines is anticipated for well development water. If the water is hazardous based on toxicity characteristics, it will be disposed of off-site in accordance with NMED regulations.

6.3 Backwash Water

Backwash water from GWTS components (GAC vessels, tanks, etc.,) will be created when the components require backwashing or during the change-out of GAC. Backwash water will require settling of fines and pre-filtration before being discharged to the GWTS. In the event that the backwash water cannot be filtered effectively, the backwash water will be disposed of off-site in accordance with NMED regulations.

6.4 Depleted GAC

Eventual depletion of the GAC's ability to remove contaminants of concern will require removal of the depleted GAC from their associated tanks. Depleted GAC will be removed from the GAC tanks and regenerated or disposed of off-site in accordance with the NMED RCRA permit.

6.5 GAC Adjustment Solutions

Following the removal of spent GAC, new GAC will be placed in the appropriate carbon vessel. Once the carbon vessel has been filled, the GAC may require conditioning. Spent or unused agents used to condition the GAC will be characterized and handled/packaged as hazardous waste in accordance with the Kirtland AFB RCRA Permit. These solutions will not be discharged to the GWTS.

THIS PAGE INTENTIONALLY LEFT BLANK

REFERENCES

Fliteway Technologies, Inc., *Operations and Maintenance Manual, Q14508 Rev 6, Pump and Treat Groundwater System, Bulk Fuels Facility, Kirtland AFB,* NM, September 15

NMED. 2016a. Temporary Permission to Discharge to the Kirtland AFB Tijeras Arroyo Golf Course Main Pond, DP 1770, March 15.

NMED. 2016b. Temporary Permission to Discharge for Pilot Test, KAFB-7 Gravity Discharge, Kirtland Air Force Base, Bulk Fuels Facility, DP-1839, January 7.

NMED. 2015. Temporary Permission to Discharge to the Kirtland AFB Tijeras Arroyo Golf Course Main Pond, June 1.

NMED. 2014. New Mexico Environment Department Groundwater Quality Bureau Discharge Permit DP-1770, December 9.

TIGG, 2015. *Activated Carbon Vessel System Operation & Maintenance Manual for Kirtland AFB*, September

USACE. 2014a. *Monitoring and Contingency Plan for Discharge Permit DP-1770, Bulk Fuels Facility (BFF) Spill, Solid Waste Management Units ST-106 and SS-111, Kirtland Air Force Base, Albuquerque, New Mexico.* Prepared by Shaw Environmental & Infrastructure, Inc. for the USACE Albuquerque District under USACE Contract No. W912DY-10-D-0014, Delivery Order 0002. Version 3.0. May.

USACE. 2014b. *Safety and Health Requirements Manual, Engineer Manual, EM-385-1-1*, Washington, D.C. November 30.

USACE. 2012. *Accident Prevention Plan, Bulk Fuels Facility (BFF) Spill, Solid Waste Management Units ST-106 and SS-111, Kirtland Air Force Base, Albuquerque, New Mexico.* Prepared by Shaw Environmental & Infrastructure, Inc. for the USACE Albuquerque District under USACE Contract No. W912DY-10-D-0014, Delivery Order 0002. Version 3.0. January.

USACE. 2011a. *Quality Assurance Project Plan, Bulk Fuels Facility (BFF) Spill, Solid Waste Management Units ST-106 and SS-111, Kirtland Air Force Base, Albuquerque, New Mexico.* Prepared by Shaw Environmental & Infrastructure, Inc. for the USACE Albuquerque District under USACE Contract No. W912DY-10-D-0014, Delivery Order 0002. Version 3.0. August.

USACE. 2011b. *Groundwater Investigation Work Plan, Bulk Fuels Facility (BFF) Spill, Solid Waste Management Units ST-106 and SS-111, Kirtland Air Force Base, Albuquerque, New Mexico.* Prepared by Shaw Environmental & Infrastructure, Inc. for the USACE Albuquerque District under USACE Contract No. W912DY-10-D-0014, Delivery Order 0002. Version 3.0. March.

THIS PAGE INTENTIONALLY LEFT BLANK

FIGURES

THIS PAGE INTENTIONALLY LEFT BLANK

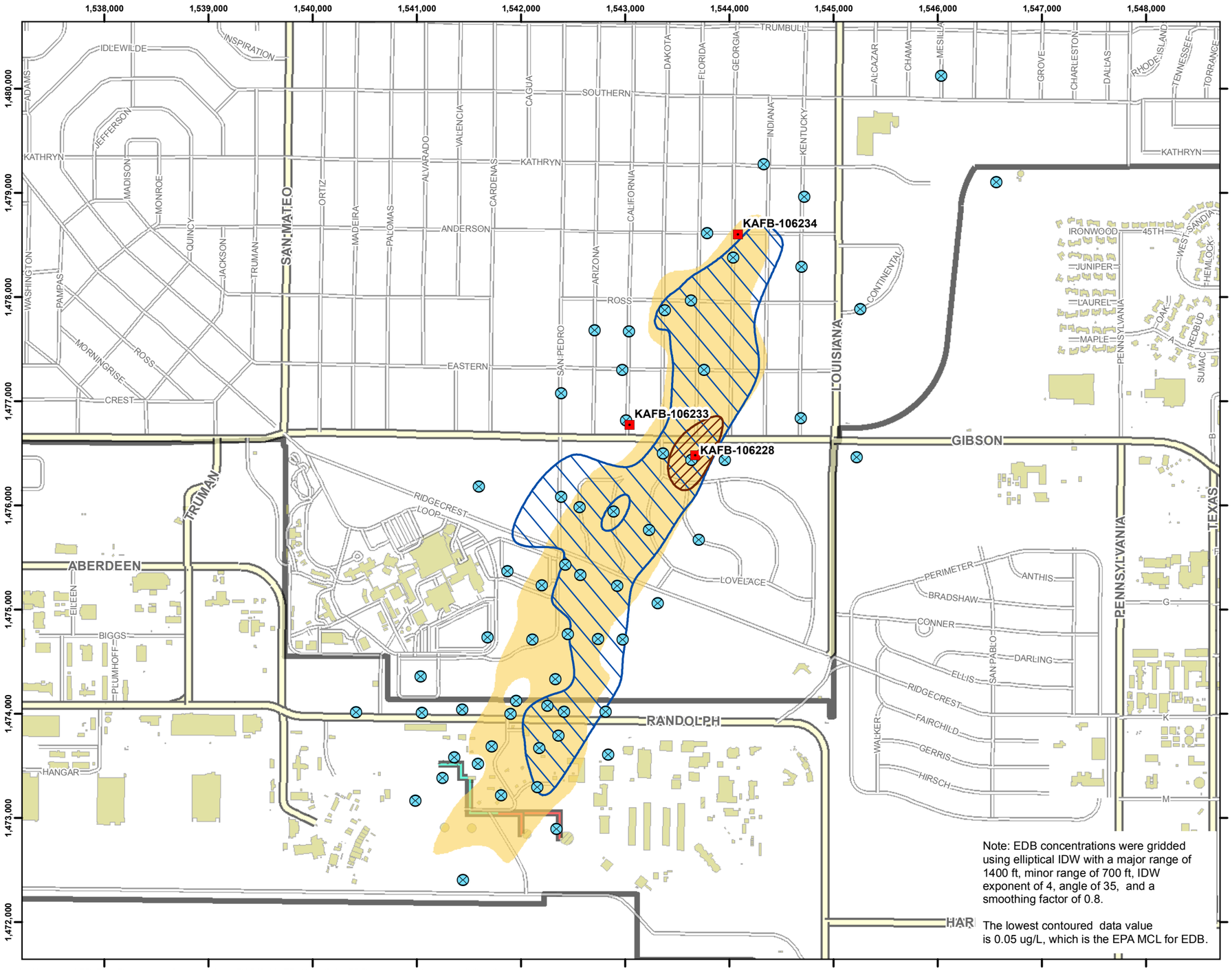

Legend

- Extraction Well
- Shallow Monitor Well
- Shallow Zone EDB > 0.05 ug/L
- Intermediate Zone EDB > 0.05 ug/L
- Deep Zone EDB > 0.05 ug/L

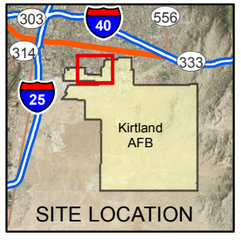

Revision Date: 03/21/16

N

0 500 1,000 2,000

Feet

1 inch = 1,000 feet

Projection : NAD83 State Plane New Mexico Central FIPS3002 Feet

Note: EDB concentrations were gridded using elliptical IDW with a major range of 1400 ft, minor range of 700 ft, IDW exponent of 4, angle of 35, and a smoothing factor of 0.8.

The lowest contoured data value is 0.05 ug/L, which is the EPA MCL for EDB.

FOURTH QUARTER 2015
BULK FUELS FACILITY
KIRTLAND AIR FORCE BASE, NEW MEXICO

FIGURE 1-1

EXTENT OF ETHYLENE DIBROMIDE PLUME

H:\Kirtland_AFB\GIS_Documents\Project_Maps\RAPID\KAFB_071_GW_EDB_plumes_Q4.mxd 03/21/16

THIS PAGE INTENTIONALLY LEFT BLANK

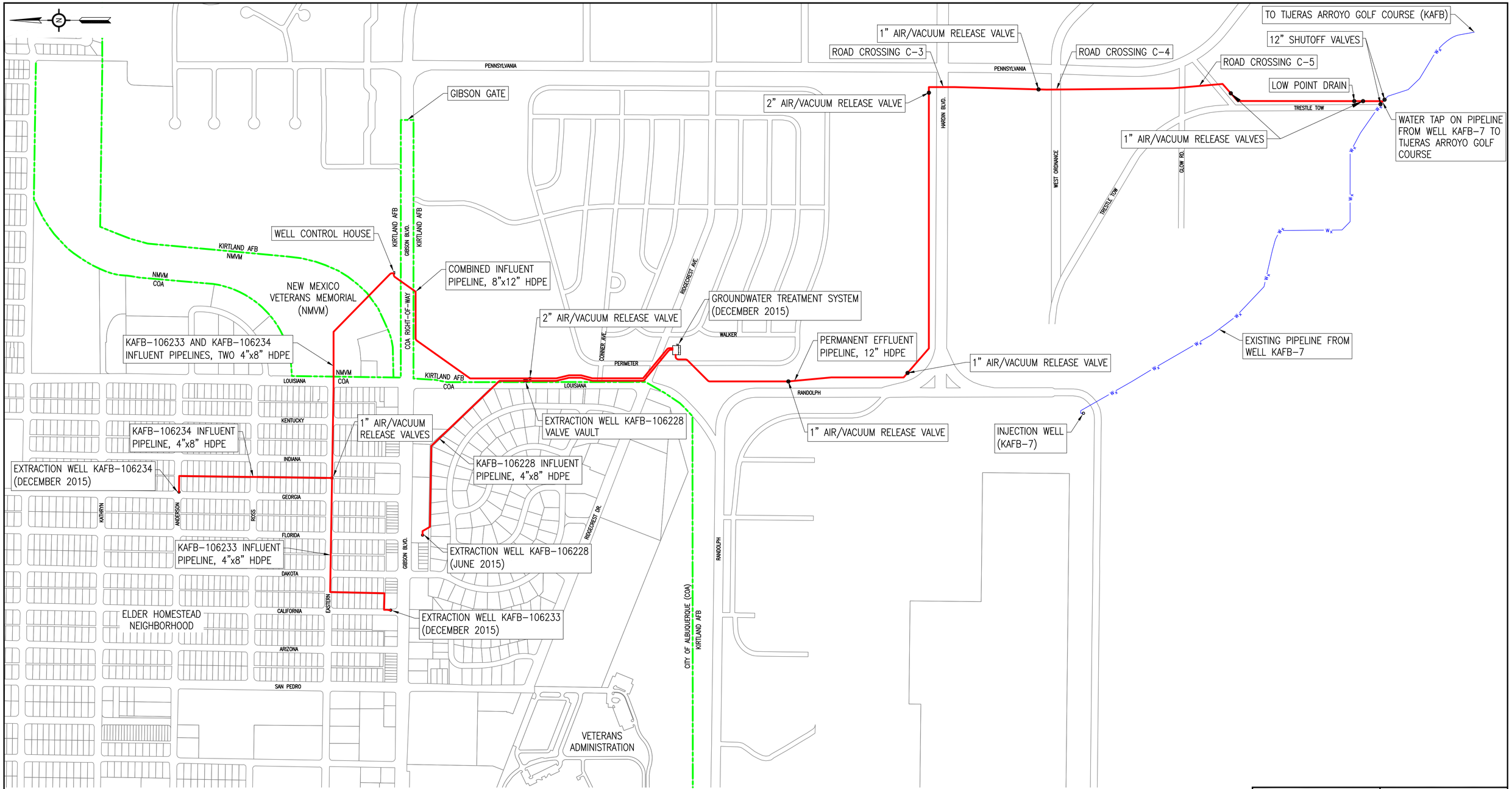

U.S. ARMY CORPS OF ENGINEERS
ALBUQUERQUE DISTRICT
ALBUQUERQUE, NEW MEXICO

CB&I FEDERAL SERVICES LLC
312 DIRECTORS DRIVE
KNOXVILLE, TENNESSEE 37923
865-690-3211

CLIENT DWG NO:

NOTES

REFERENCE DRAWINGS	NO.	REVISION	DRAWN	CK'D	APPD	DATE
	0	ISSUED FOR O&M MANUAL	CFB	SES	SES	03/18/16

THIS DOCUMENT IS THE PROPERTY OF CHICAGO BRIDGE & IRON COMPANY ("CB&I"). IT MAY CONTAIN INFORMATION DESCRIBING TECHNOLOGY OWNED BY CB&I AND DEEMED TO BE COMMERCIALLY SENSITIVE. IT IS TO BE USED ONLY IN CONNECTION WITH WORK BEING PERFORMED BY CB&I. REPRODUCTION IN WHOLE OR IN PART FOR ANY PURPOSE OTHER THAN WORK PERFORMED BY CB&I IS FORBIDDEN EXCEPT BY EXPRESS WRITTEN PERMISSION OF CB&I. IT IS TO BE SAFEGUARDED AGAINST BOTH DELIBERATE AND INADVERTENT DISCLOSURE TO ANY THIRD PARTY.

DRAWN: CFB | CK'D: | APPD: | DATE: 11/09/15 | SCALE: 1" = 400'

FIGURE 1-2
SITE PLAN FOR GROUNDWATER TREATMENT SYSTEM

FOR: BULK FUELS FACILITY, KIRTLAND AFB, NM

PROJECT NO: 500433 | DWG NO: 500433-002-CV-OM-000001 | REV: 0

Form: CMS-830-00-FM-02104 CB ANSI D.dwg

File: 500433-002-CV-OM-000001.dwg
Plot Date/Time: Mar 18, 2016 - 10:11am
Plotted By: charles.bentley

THIS PAGE INTENTIONALLY LEFT BLANK

TABLE

THIS PAGE INTENTIONALLY LEFT BLANK

Table 2-1
Alarm Conditions, Interlocks, and System Responses

Alarm Condition	Interlock	System Response
Leak detected in an extraction well vault or well control house	Disables all extraction pump in affected vault	Email and eventual Full system shutdown
Leak detected in a double walled pipe	Disables all extraction pumps	Email and eventual Full system shutdown
High water level in GWTS building sump or truck bay sump	Disables all extraction pumps and all skid pumps	Email and immediate Full system shutdown
Water level too high in influent tank	Disables all extraction pumps	Email and eventual Full system shutdown
Water level too low in influent tank or too high in effluent tank	Disables influent skid pumps	Email and eventual Full system shutdown
Water level too low in effluent tank	Disables effluent skid pump	Email and eventual Full system shutdown
Influent skid or GAC pressure exceeds set point	Disables influent skid pumps	Email and eventual Full system shutdown
Effluent skid pressure exceeds set point	Disables effluent skid pump	Email and eventual Full system shutdown
Intrusion Alert, Power Loss, or Low temperature detected	None	Email
Smoke detected in GWTS	None	Email and notifies Kirtland AFB Fire Department
High water level or high pressure in well KAFB-007	Disables effluent skid pump	Email and eventual Full system shutdown
High water level in Golf Course Main Pond	Disables effluent skid pump	Email and eventual Full system shutdown

THIS PAGE INTENTIONALLY LEFT BLANK

APPENDIX A

Regulatory Requirements

THIS PAGE INTENTIONALLY LEFT BLANK

REGULATORY REQUIREMENTS

The investigation and remediation of the historical release of aviation gasoline and jet fuel from Kirtland Air Force Base's (AFBs) former Bulk Fuels Facility (BFF) is subject to a number of different regulatory requirements including, but not limited to the following:

- The Resource Conservation and Recovery Act (RCRA) corrective action provisions in Part 6 of the Kirtland AFB's Hazardous Waste Treatment Facility Operating Permit (HWTF Permit No. NM9570024423);
- The waste generator requirements in 40 CFR 262.11 for any wastes generated during the operation and maintenance of the Groundwater Treatment System (GWTS); and
- The New Mexico Water Quality Control Commission (WQCC) regulations for Class V underground injection control (UIC) wells (20.6.2.5006 New Mexico Administrative Code [NMAC]).

The following describes the applicability of this regulatory framework to operation and maintenance of the GWTS and the disposition of treated effluent.

B.1 RCRA Corrective Action Requirements

Kirtland AFB's HWTF Permit is enforced by the New Mexico Environment Department (NMED) Hazardous Waste Bureau (HWB), which is authorized to administer RCRA by the Environmental Protection Agency (EPA). Part 6.2.2.2.12 of Kirtland AFB's HWTF Permit provides for the implementation of interim measures (IMs) if the NMED HWB determines that "such measures are necessary to reduce or prevent migration of hazardous wastes or hazardous constituents that have, or may result in, an unacceptable human or environmental receptor exposure to hazardous waste or hazardous constituents while long-term corrective action remedies are being evaluated and implemented". Kirtland AFB is currently implementing a pump and treat IM in accordance with Part 6.2.2.2.12 of the HWTF Permit that is designed to collapse and treat the ethylene dibromide (EDB) groundwater plume. All IM work is performed in accordance with work plans approved by the NMED HWB. The schedule and supporting milestones for this IM are also enforced by the NMED HWB.

The EDB plume IM consists of extraction wells and influent conveyance piping to bring the extracted groundwater to the GWTS. As described in Section 2.0 of the Operations and Maintenance Plan, the GWTS employs granulated activated carbon to treat the fuel-contaminated groundwater to meet the lower of applicable New Mexico Water Quality Control Commission groundwater standards or the drinking water maximum contaminant levels adopted by EPA under the federal Safe Drinking Water Act (42 U.S.C. §§ 300f to 300j-26). Although these water quality standards are the enforceable discharge criteria, the treatment goal is achieve non-detectable concentrations for all contaminants of concern in the treated effluent.

B.2 RCRA Waste Generator Requirements

Waste generators are responsible for characterizing wastes in accordance with 40 CFR 262.11 to determine if a waste is hazardous and to identify proper disposal options. Detailed waste characterization procedures for the GWTS Operations and Maintenance Plan are provided in Attachment M.

B.3 Groundwater Regulations

The treated effluent is managed in one of two ways:

- Land application (e.g. irrigation water for the on-Base Tijeras Arroyo Golf Course and dust suppression). The land application of the treated effluent does not require a permit from the NMED Groundwater Quality Bureau (GWQB) as long as it is in accordance with the conditions in the April 4, 2016 DP-1770 Modification and Application Termination letter (NMED, 2016b) and
- "Injection" into one or more Class V UIC wells either under a temporary permission issued by the NMED GWQB (NMED, 2016a and 2016c) pursuant to 20.6.2.3106(B) NMAC or a Class V UIC permit issued the NMED GWQB pursuant to 20.6.2. 5006 NMAC.

The RCRA corrective action requirements are enforced by the NMED HWB for the BFF cleanup. The Class V UIC temporary permissions and permit issued and enforced by the NMED GWQB ensure that the disposition of the treated effluent is compliant with State water quality standards.

B.4 References

NMED. 2016c. Correspondence from Ms. Michelle Hunter, Chief, NMED-GWQB to Mr. Wayne L. Bitner, Chief, Environmental Restoration, Kirtland AFB, NM, regarding DP-1839 Approval with Conditions for Temporary Permission to Discharge IDW . 25 April.

NMED. 2016b. Correspondence from Ms. Trais Kliphuis, Director, Water Protection Division to Mr. Wayne L. Bitner, Chief, Environmental Restoration, Kirtland AFB, NM, regarding DP-1770 Modification Application and Termination. 4 April.

NMED. 2016a. Correspondence from Ms. Michelle Hunter, Chief, NMED-GWQB, to Mr. Wayne Bitner, Chief, Environmental Restoration, Kirtland AFB, New Mexico, Approval with Conditions, Request for Temporary Permission to Discharge to KAFB-7, Kirtland Air Force Base Fuels Facility, DP-1839. 17 January.

REGULATORY CORRESPONDENCE

THIS PAGE INTENTIONALLY LEFT BLANK

NEW MEXICO
ENVIRONMENT DEPARTMENT

Harold Runnels Building
1190 South St. Francis Drive (87505)
P.O. Box 5469, Santa Fe, New Mexico 87502-5469
Phone (505) 827-2900 Fax (505) 827-2965
www.env.nm.gov

SUSANA MARTINEZ
Governor

JOHN A. SANCHEZ
Lieutenant Governor

RYAN FLYNN
Cabinet Secretary

BUTCH TONGATE
Deputy Secretary

CERTIFIED MAIL – RETURN RECEIPT REQUESTED

January 7, 2016

Wayne L. Bitner
Chief, Environmental Restoration
2000 Wyoming Blvd SE
Kirtland AFB NM 87117-5600

RE: Approval with Conditions, Request for Temporary Permission to Discharge to KAFB-7, Kirtland Air Force Base, Bulk Fuels Facility, DP-1839

Dear Mr. Bitner:

This letter supersedes the letter inadvertently dated January 5, 2015.

The New Mexico Environment Department (NMED) is in receipt of Kirtland Air Force Base's (KAFB) *Request for Temporary Permission to Discharge for Pilot Test KAFB-7 Gravity Injection*, dated December 21, 2015, (Request). Hereafter, KAFB will be referred to as the "Permittee." The Request pertains to a 120 day pilot test of the discharge, *i.e.,* injection, of a maximum of 500 gallons per minute (gpm) of treated groundwater to the retrofitted groundwater extraction well KAFB-7. NMED has reviewed the Request and hereby issues an associated approval pursuant to Subsection B of 20.6.2.3106 NMAC of the New Mexico Water Quality Control Commission Regulations, with the conditions specified below.

The Request is associated with the Permittee's groundwater discharge permit application titled *Class V Underground Injection Control (UIC) Permit* (Application), received by NMED on December 4, 2015, proposing up to five injection wells to support the ethylene dibromide (EDB) plume Interim Measure (IM) for the historical fuel leak from the former Bulk Fuels Facility (BFF) at KAFB. The Permittee's stated objective of the pilot test is twofold: to evaluate the feasibility of using KAFB-7 as an injection well, and to have an additional winter 2016 water disposition option for the treated groundwater from the full-scale groundwater treatment system (GWTS).

The NMED deemed the Class V UIC permit application administratively complete on December 17, 2015, and issued an associated public notice on December 22, 2015. The NMED refers to the pending associated discharge permit as DP-1839. Class V groundwater remediation UIC wells (as defined in 20.6.2.5002.B(5)(d)(i) NMAC) are used to inject groundwater that has been treated to meet applicable groundwater quality standards. All UIC wells must operate in conformance with appropriate and applicable ground and surface water protection requirements as required by 20.6.2.5003.B NMAC.

The water to be injected is treated groundwater from extraction wells KAFB-106228, KAFB-106233 and KAFB-106234 that has been impacted with EDB and possibly other constituents of concern (COCs). The extraction wells are intended to collapse the downgradient portion of the dissolved phase contaminant plume, with extracted groundwater treated prior to injection using granular activated carbon to remove all organic constituents to below the drinking water standards specified below. The scope of this approval for temporary discharge for a period of 120 days is limited to the authorization of the injection of sufficiently treated groundwater to KAFB-7 and is not intended to define, limit, or approve the design of the GWTS. The proposed discharge location is within the boundaries of KAFB, south of Southgate Avenue and Ordnance Street SE, in Township T10N, Range R4E, Section S6, Albuquerque, Bernalillo County.

Temporary permission to discharge is hereby granted for 120 days from the initiation of injection of the treated groundwater, pursuant to Subsection B of 20.6.2.3106 NMAC. NMED considers the Permittee to have shown the good cause necessary for a temporary permission to discharge by demonstrating that the discharge will expedite the arrest the migration of the EDB plume.

This approval is contingent on the Permittee discharging and reporting as described in the Request and upon the following conditions:

1. Prior to initiating the discharge, the Permittee must verbally notify NMED of the date the temporary discharge is to commence.
2. Prior to occurrence, the Permittee must notify NMED in writing of any increase of the discharge volume or any process modification that would result in any significant modification in the temporary discharge of water contaminants. (20.6.2.3107.C NMAC)
3. Anthropogenic chemicals in injected water shall not exceed the more stringent value of either New Mexico Water Quality Control Commission standards (Section 20.6.2.3103 NMAC) or the Safe Drinking Water Act maximum contaminant levels (MCLs) for drinking water. For NMWQCC listed Toxic Pollutants without 3103 standards or MCLs, injected water shall not exceed the most current Tap Water Limits in Table A-1 of the NMED Risk Assessment Guidance. The contaminants of concern (COCs) associated with the EDB plume and their applicable standard are:
    a. Benzene: 5 µg/L
    b. Ethylene dibromide (EDB): 0.05 µg/L
    c. Iron: 1 mg/L
    d. Manganese: 0.2 mg/L
    e. Toluene: 750 µg/L
    f. Total xylenes: 620 µg/L

4. The Permittee shall submit documentation demonstrating that the GWTS effluent achieves the standards specified in Condition #3 above to NMED prior to the commencement of the temporary discharge.
5. After commencement of the temporary discharge, the GWTS effluent shall be sampled daily for the first week of operation with 24-hour analytical turnaround times. After the first week of operation, weekly samples shall be collected for the first month of operation with 5-day analytical turnaround times. After one month, and once it is determined that that constituents in effluent samples are not exceeding the standards specified in Condition #3, the sampling frequency may be reduced to monthly in accordance with Application Attachment D (*Monitoring and Contingency Plan),* Subsection 2.1.
6. Each time a new extraction well is brought on-line, the same sampling frequency specified in Condition #5 shall be utilized.
7. Should any COCs be detected above applicable standards in the effluent of the GWTS, the pumping shall cease immediately and the Permittee shall implement the response and notification procedures specified at Application Attachment D, Section 3 (*Contingency Plan*), Subsection 3.2. Should the concentrations of iron or manganese exceed applicable standards, the Permittee shall propose to NMED additional appropriate treatment methods for installation in addition to the GWTS.
8. Injected water shall not overtop the KAFB-7 well casing liner installed in 1979.
9. Water levels will be monitored with transducers in associated monitoring wells (KAFB-10523, KAFB-10524, KAFB-10507, KAFB-10508) as well as downhole in KAFB-7. System controls shall ensure shutdown of all associated components should conditions warrant.
10. The injection flow-rate monitoring, inspection, and calibration shall be performed in accordance with Application Attachment D, Subsection 2.2.
11. The injection of treated water into KAFB-7 shall be manually supervised for the first 24 hours of injection.
12. Well KAFB-7 shall be configured as represented in Application Figure 7.
13. All equipment placed in KAFB-7 shall be decontaminated utilizing a steam pressure wash prior to insertion in the well.
14. No chemicals shall be placed into KAFB-7 without the prior approval of NMED.
15. Access of unauthorized personnel to both the GWTS and KAFB-7 shall be restricted.
16. NMED representatives shall be allowed to inspect any treatment works and monitoring equipment, and to sample any associated effluent. (See 20.6.2.3107.D)
17. A final report shall be submitted to NMED within 60 days of cessation of the temporary discharge. The report shall include the following information:
    i. Total effluent volumes from the GWTS and injection volumes to KAFB-7, with any discrepancy explained.
    ii. Daily total injection volumes.
    iii. Effluent sampling analytical results.
    iv. Any operations and maintenance activities performed during the period.
    v. A comparison of injection flow rates and associated changes to hydraulic head.
    vi. Groundwater elevation contour map(s) illustrating the aquifer's response to injection, including maps illustrating changed to the aquifer resulting from the discharge changes referred to in Condition #2.

This approval does not relieve the Permittee of the responsibility to comply with any other applicable federal, state, and/or local laws, regulations, zoning requirements, and nuisance ordinances. Also, this approval does not relieve the Permittee of liability should its operation result in actual pollution of ground or surface waters.

If you have any questions, please contact Steve Pullen of the Ground Water Pollution Prevention Section at 505-827-2962.

Sincerely,

Michelle Hunter, Chief
Ground Water Quality Bureau

MH:sp

cc: (e-copies)
John Kieling, NMED-HWB
William Chavez, NMED-DI
Dennis McQuillan, NMED
Diane Agnew, NMED
Steve Huddleson, NMED-GWQB
Steve Pullen, NMED-GWQB
Caitlin LaChance, CB&I

files: Read
DP-1770
DP-1839

NEW MEXICO
ENVIRONMENT DEPARTMENT

Harold Runnels Building
1190 Saint Francis Drive (87505)
PO Box 5469, Santa Fe, NM 87502-5469
Phone (505) 827-2990 Fax (505) 827-1628
www.env.nm.gov

SUSANA MARTINEZ
Governor
JOHN A. SANCHEZ
Lt. Governor

RYAN FLYNN
Cabinet Secretary
BUTCH TONGATE
Deputy Secretary

CERTIFIED MAIL – RETURN RECEIPT REQUESTED

April 4, 2016

Mr. L. Wayne Bitner
Chief, Environmental Restoration
2050 Wyoming Blvd SE
Kirtland AFB, New Mexico 87117-5600

RE: DP-1770 Modification Application and Termination

Dear Mr. Bitner:

On December 4, 2015, the New Mexico Environment Department (NMED) Ground Water Quality Bureau (GWQB) received Kirtland Air Force Base's (KAFB) application (Application) to modify Discharge Permit 1770 (DP-1770). The Application requested authorization to apply treated groundwater as an irrigation source to the KAFB Tijeras Arroyo Golf Course (Golf Course), to utilize the treated groundwater for dust suppression, and to infiltrate a portion of the water. The source of this discharge is groundwater contaminated with ethylene dibromide (EDB) extracted from wells KAFB-106228R, KAFB-106233 and KAFB-106234, which is then treated using granular activated carbon (GAC) for EDB removal to below the constituent's 0.05 µg/L Maximum Contaminant Level prior to discharge. KAFB has established a treatment goal for the GAC system of non-detectable EDB. The proposed discharge is on or near the northwest edge of the Golf Course, Kirtland Air Force Base, Albuquerque in Section 9, Township 9N, Range 4E, Bernalillo County, New Mexico.

In addition to the land application procedures addressed in the Application, KAFB has requested authorization to utilize underground injection wells as a means to dispose of the treated groundwater in a separate discharge permit application (DP-1839). The groundwater that is the subject of DP-1770 is undergoing remediation, *i.e.*, extracted and treated, pursuant to KAFB's Hazardous Waste Treatment Facility Operating Permit, EPA ID No. NM9570024423, and meets Federal Drinking Water Standards. The GWQB also notes that KAFB has been irrigating the Golf Course with water of similar chemistry and quality for over fifteen years, with no adverse effects to public health or the environment.

KAFB is abating water pollution under Resource Conservation and Recovery Act (RCRA) authority delegated to NMED, pursuant to a hazardous waste permit and the Hazardous Waste Management Regulations, 20.4.1 NMAC. Therefore, KAFB is exempt from abatement plan requirements for this activity pursuant to 20.6.2.4105.A(2) and (3) NMAC. As would be the case if the abatement was occurring strictly under an abatement plan approved pursuant to the Ground and Surface Water Protection Regulations, 20.6.2 NMAC, a discharge permit for land application of treated effluent is not required. Therefore, the GWQB hereby terminates DP-1770 as it is not required for the activity of irrigating the Golf Course with treated effluent regulated pursuant to Hazardous Waste Permit No. NM9570024423.

Should any of these circumstances change, please contact NMED immediately so that we may re-evaluate the regulatory status of this activity. DP-1839 is not impacted by this determination.

If you have any questions, please contact Steve Pullen of the Ground Water Quality Bureau's Pollution Prevention Section at (505) 827-2962.

Sincerely,

Trais Kliphuis, Director
Water Protection Division

Cc: (via e-mail)

Kathryn Roberts, NMED Resource Protection Division
Dennis McQuillan, NMED Chief Scientist
Michelle Hunter, NMED Ground Water Quality Bureau
John Kieling, NMED Hazardous Waste Bureau
Steve Huddleson, NMED Ground Water Quality Bureau
Steve Pullen, NMED Ground Water Quality Bureau
Jennifer Hower, NMED Office of General Counsel
John Verheul, NMED Office of General Counsel

NEW MEXICO
ENVIRONMENT DEPARTMENT

Harold Runnels Building
1190 South St. Francis Drive (87505)
P.O. Box 5469, Santa Fe, New Mexico 87502-5469
Phone (505) 827-2900 Fax (505) 827-2965
www.env.nm.gov

SUSANA MARTINEZ
Governor

JOHN A. SANCHEZ
Lieutenant Governor

RYAN FLYNN
Cabinet Secretary

BUTCH TONGATE
Deputy Secretary

CERTIFIED MAIL – RETURN RECEIPT REQUESTED

April 25, 2016

Wayne L. Bitner
Chief, Environmental Restoration
2000 Wyoming Blvd SE
Kirtland AFB NM 87117-5600

RE: Approval with Conditions, Request for Temporary Permission to Discharge IDW, Kirtland Air Force Base, Bulk Fuels Facility, DP-1839

Dear Mr. Bitner:

The New Mexico Environment Department (NMED) is in receipt of Kirtland Air Force Base's (KAFB) *Request for Temporary Permission to Discharge, Bulk Fuels Facility, Kirtland Air Force Base, New Mexico, Investigation Derived Waste*, dated April 12, 2016, (Request). Hereafter, KAFB will be referred to as the "Permittee." The Request pertains to the inclusion of investigative derived waste (IDW) to the allowable fluids discharged under Discharge Permit 1839. NMED has reviewed the Request and hereby issues an associated approval pursuant to Subsection B of 20.6.2.3106 NMAC of the New Mexico Water Quality Control Commission Regulations, with the conditions specified below.

The Request is associated with the Permittee's groundwater discharge permit application titled *Class V Underground Injection Control (UIC) Permit* (Application), received by NMED on December 4, 2015, proposing up to five injection wells to support the ethylene dibromide (EDB) plume Interim Measure (IM) for the historical fuel leak from the former Bulk Fuels Facility (BFF) at KAFB. The NMED deemed the Application administratively complete on December 17, 2015, and issued an associated public notice on December 22, 2015. The Permittee's stated objective of the Request is to protect the health and safety of workers accumulating IDW and to prevent unintentional releases to the environment.

Class V groundwater remediation UIC wells (as defined in 20.6.2.5002.B(5)(d)(i) NMAC) are utilized to inject groundwater that has been treated to meet applicable groundwater quality standards. All UIC wells must operate in conformance with appropriate and applicable ground and surface water protection requirements as required by 20.6.2.5003.B NMAC. The Permittee is currently injecting effluent from the BFF groundwater treatment system (GWTS) into well KAFB-7 as authorized by a Temporary Permission to Discharge issued by NMED dated January 7, 2016.

This temporary permission is associated with IDW generated within the EDB plume and may consist of fluids purged from groundwater monitoring wells, decontamination fluids, development waters, and extraction well aquifer testing water. In addition to this IDW, the Permittee is currently authorized to treat and inject groundwaters from extraction wells KAFB-106228, KAFB-106233, and KAFB-106234. All injected fluids, including the IDW, are treated prior to injection using granular activated carbon to remove all organic constituents to below the drinking water standards. The scope of this temporary approval is limited to the authorization of the injection of sufficiently treated IDW and is not intended to define, limit, or approve the design of the GWTS. The proposed discharge location is within the boundaries of KAFB, south of Southgate Avenue and Ordnance Street SE, in Township T10N, Range R4E, Section S6, Albuquerque, Bernalillo County.

Temporary permission to discharge is hereby granted for 120 days from the initiation of inclusion of IDW into the GWTS pursuant to Subsection B of 20.6.2.3106 NMAC. This approval is contingent on the Permittee discharging and reporting as described in the Request and upon the following conditions:

1. Prior to initiating the inclusion of IDW into the GWTS, the Permittee must verbally notify NMED of the date the temporary inclusion is to commence.
2. Prior to occurrence, the Permittee must notify NMED in writing of any significant modification in the discharge of water contaminants. (20.6.2.3107.C NMAC)
3. Anthropogenic chemicals in injected water shall not exceed the more stringent value of either New Mexico Water Quality Control Commission standards (Section 20.6.2.3103 NMAC) or the Safe Drinking Water Act maximum contaminant levels (MCLs) for drinking water. For NMWQCC listed Toxic Pollutants without 3103 standards or MCLs, injected water shall not exceed the most current Tap Water Limits in Table A-1 of the NMED Risk Assessment Guidance. The contaminants of concern (CoCs) associated with the EDB plume and their applicable standard are:
    a. Benzene: 5 µg/L
    b. Ethylene dibromide (EDB): 0.05 µg/L
    c. Iron: 1 mg/L
    d. Manganese: 0.2 mg/L
    e. Toluene: 750 µg/L
    f. Total xylenes: 620 µg/L

4. Should any CoCs be detected above applicable standards in the GWTS effluent, the discharge shall cease immediately and the Permittee shall implement the contingencies specified in the Request. Should the concentrations of iron or manganese exceed applicable standards, the Permittee shall propose to NMED additional appropriate treatment methods for installation in addition to the GWTS.
5. NMED representatives shall be allowed to inspect any treatment works and monitoring equipment, and to sample any associated effluent. (20.6.2.3107.D NMAC)

This approval does not relieve the Permittee of the responsibility to comply with any other applicable federal, state, and/or local laws, regulations, zoning requirements, and nuisance ordinances. Also, this approval does not relieve the Permittee of liability should its operation result in actual pollution of ground or surface waters.

If you have any questions, please contact Steve Pullen of the Ground Water Pollution Prevention Section at 505-827-2962.

Sincerely,

Michelle Hunter, Chief
Ground Water Quality Bureau

MH:SP

cc: (e-copies)
John Kieling, NMED-HWB
William Chavez, NMED-DI
Dennis McQuillan, NMED
Diane Agnew, NMED
Steve Huddleson, NMED-GWQB
Steve Pullen, NMED-GWQB
Kathryn Lynnes, SAF-IEE
Adria Bodour, AFCEC-CZRX
Trent Simpler, USACE

files: Read
DP-1839

THIS PAGE INTENTIONALLY LEFT BLANK

APPENDIX B

Health and Safety

THIS PAGE INTENTIONALLY LEFT BLANK

HEALTH AND SAFETY

The foremost priority in operating the Groundwater Treatment System (GWTS) is to ensure the health and safety of the operator, visitors, and nearby residents. The operations and maintenance (O&M) phase of the project includes all activities following construction and startup, and involves the operation of the GWTS, as designed, until the remediation criteria are met.

B.1 Accident Prevention Plan

Operation and maintenance of the GWTS is covered under the contractor's specific accident prevention plan (APP) or similar approved plan. The APP should cover all remediation activities related to the GWTS and includes a Site Safety and Health Plan (SSHP), which specifies the procedures that are necessary to protect on-site personnel, visitors, and the public from harm resulting from project activities or exposure to hazardous materials. A copy of the contractor's SSHP must be kept at the GWTS control room for reference.

The operator must be familiar with their APP and its requirements, including training (project orientation, Occupational Safety and Health Administration (OSHA) Hazardous Waste Operations and Emergency Response [also known as HAZWOPER]), medical monitoring, personal protective equipment (PPE), confined space entry procedures, fall protection measures (required for any activity having a potential fall greater than 6 feet), air monitoring, hazard communication, emergency response plan, hospital route, and the site control log. Prior to assignments at the GWTS, all personnel shall be trained in the contents of this O&M Manual. The plant operators will provide a safety briefing for visitors to the plant and well locations. A sign-in sheet for visitors will be posted at the GWTS.

Additionally, activity hazard analyses (AHA) have been developed for all major tasks to be performed at the GWTS and are included in the APP. Activity hazard analysis is a documented process by which the steps required to accomplish a work activity are outlined, the actual or potential hazards of the activity are identified, and measures for the elimination or control of those hazards are specified. The risk assessment and management process is accomplished through the preparation of the AHAs. Applicable AHA(s) will be reviewed by personnel assigned to the GWTS or assisting in specific activities. Additional AHAs will be prepared when new tasks are added, when the job situation changes, or when it becomes necessary to alter safety requirements.

Treatment plant operations may normally be conducted in Level D PPE, which includes protective footwear, standard work clothing, hard hats, and protective eye wear (safety glasses). All equipment in the GWTS has been specified to meet OSHA noise limits. During start-up, noise monitoring will be conducted, and any area requiring hearing protection will be posted. In event of any unauthorized discharge, refer to the appropriate AHA and Contingency Plan (Appendix K).

B.2 Hazards

Operation of the GWTS may include the following hazards, which the Operator should be aware of:

- Contact with contaminated (untreated) groundwater
- Confined space entry
- Electrical hazards
- Hazards associated with rotating equipment (pump shafts, vent fans)
- Release of stored energy (mechanical and pressurized systems)
- Slip/trip/fall hazards
- Lifting heavy objects
- Heat and cold stress

The following paragraphs outline the hazard categories and the corresponding control measures that will be applied during any additional start-up activities or GWTS operation and maintenance.

B.2.1 Slips, Trips, and Falls

Slips, trips, and falls are frequently the cause of various accidents and injuries, with a high risk of serious injury. The following actions will reduce the risks from slips, trips, and falls:

- Maintain sufficient lighting inside and outside buildings.
- Use and maintain guarded work platforms for access to equipment for O&M.
- Maintain slip-resistant floor surfaces.
- Always use the vertical lifeline fall protection systems for a fixed ladder or harness for elevated lifts.
- Maintain clear space around all sampling locations.

B.2.2 Rotating Equipment

Personnel can be seriously injured when appendages or clothing are caught in rotating equipment. All rotating equipment is provided with guards and shielding that should be maintained and not removed. In addition, operators should be aware of locations of the emergency stop buttons that have been provided at key locations.

B.2.3 Confined Space

Potential confined space hazards in the GWTS include the feed tank, the treated water tank, the GAC vessels, and the well vaults. Operators will follow their approved confined space entry procedures and equipment lock-out/tag-out procedures if it is necessary to enter any of these confined spaces. These procedures should be in conformance with the *Safety and Health Requirements Manual, Engineer Manual, EM-385-1-1* (USACE, 2014b). Copies of these procedures will be maintained at the GWTS system control room. Confined space entry procedures must account for the potential for oxygen-deficient atmospheres in any tank or vessel that contains wet carbon or wet carbon fines. Wet carbon will adsorb oxygen from the air and can result in oxygen-deficient atmospheres.

B.2.4 Electrical

In addition to the 120-volt utility, lighting, and control circuits, there is also 480-volt equipment in the GWTS, and 12,470-volt power feeding the transformers for the GWTS building and the well control house building. All three of the existing well pumps, the groundwater feed pumps, the treated water pump, the air compressor, as well as the heaters for the building are connected to 480-volt power service. The potential for injury and property damage from electrocution and/or arc flash exists, especially with the 480-volt equipment and control panels. In order to reduce this hazard, the design uses separate combination starters and variable frequency drive (VFDs) cabinets to keep the 480-volt power out of the programmable logic controller control panels and thereby reduces the PPE required to access the programmable logic controller for startup and troubleshooting. External controls for the VFDs will be installed on the high-voltage cabinets to allow pump restarts without an electrician. In addition, all utilities at the site, including the buried 480- and 12,740-volt cable, are marked with buried detectable warning tape to reduce the potential for accidental intrusion. All maintenance and troubleshooting activities involving the electrical system should be conducted by qualified personnel. These activities will follow the contractor's approved lock-out/tag-out procedures and arc flash hazard procedures. Work on energized 480-volt circuits will only be conducted by a qualified electrician with the permission of the site manager.

APPENDIX C

Organization and Responsibilities

THIS PAGE INTENTIONALLY LEFT BLANK

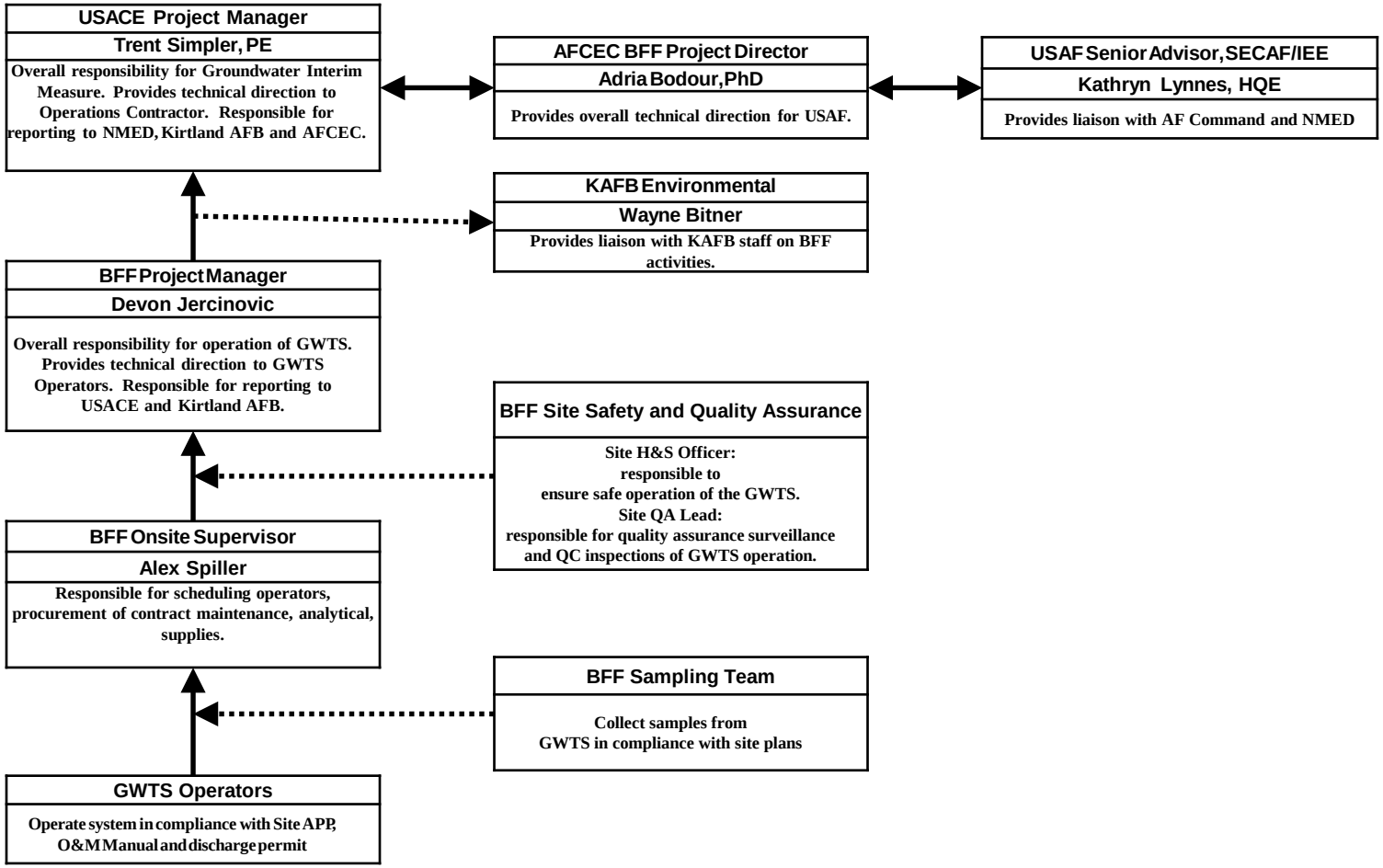
USACE Project Manager
Trent Simpler, PE
Overall responsibility for Groundwater Interim Measure. Provides technical direction to Operations Contractor. Responsible for reporting to NMED, Kirtland AFB and AFCEC.
AFCEC BFF Project Director
Adria Bodour, PhD
Provides overall technical direction for USAF.
USAF Senior Advisor, SECAF/IEE
Kathryn Lynnes, HQE
Provides liaison with AF Command and NMED
KAFB Environmental
Wayne Bitner
Provides liaison with KAFB staff on BFF activities.
BFF Project Manager
Devon Jercinovic
Overall responsibility for operation of GWTS. Provides technical direction to GWTS Operators. Responsible for reporting to USACE and Kirtland AFB.
BFF Site Safety and Quality Assurance
Site H&S Officer:
responsible to
ensure safe operation of the GWTS.
Site QA Lead:
responsible for quality assurance surveillance and QC inspections of GWTS operation.
BFF Onsite Supervisor
Alex Spiller
Responsible for scheduling operators, procurement of contract maintenance, analytical, supplies.
BFF Sampling Team
Collect samples from
GWTS in compliance with site plans
GWTS Operators
Operate system in compliance with Site APP, O&M Manual and discharge permit

THIS PAGE INTENTIONALLY LEFT BLANK

APPENDIX D

Description of GWTS Equipment and Facilities

THIS PAGE INTENTIONALLY LEFT BLANK

DESCRIPTION OF GROUNDWATER TREATMENT SYSTEM EQUIPMENT AND FACILITIES

The purpose of this section is to familiarize users with basic information regarding the Groundwater Treatment System (GWTS). Pertinent vendor catalog information and manuals from equipment manufacturers are provided in the equipment binders that will be kept at the GWTS building. The text of this appendix is intended to provide an overview without being overly redundant with the manufacturer's information. A flow diagram and piping and instrumentation diagrams (P&IDs) for the GWTS are included in Appendix E of this Operations and Maintenance (O&M) Plan.

D.1 Groundwater Extraction Wells and Pumps

The extraction system consists of three extraction wells (Kirtland Air Force Base [AFB]-106228, KAFB-106233, and KAFB-106234), one well control house (WCH), and approximately 3 miles of double-wall piping to convey the extracted groundwater to the GWTS. As shown on the flow sheet in Appendix E, the well pumps are P-101, P-102, and P-103 for the three wells. Additional wells are scheduled for 2016 and 2017 (as required).

The wellhead for each well is enclosed in below-grade, reinforced concrete well vaults. The vaults house the piping that connects the well pump outlet to the double-wall pipelines that carry the contaminated groundwater to the GWTS. The well vaults are fitted with leak-monitoring devices (conductivity switches) in the annular space between the inner and outer walls of the double-wall pipe. Water sensors are also located in each well vault.

D.1.1 KAFB-106228

KAFB-106228 is located in the parking lot of Christ United Methodist Church at 6200 Gibson Boulevard SE. The extraction well is 8 inches in diameter and screened from 440 to 540 feet bgs. The well is equipped with a well pump (P-101) which is a 30-horsepower (Hp), 16-stage submersible centrifugal pump (480-volt, three-phase) capable of pumping a nominal flow rate of between 20 to 180 gpm. P-101 is set 15 feet above the bottom of the well screen.

Electrical power for KAFB-106228 is supplied by a nearby Public Service Company of New Mexico pole-top three-phase transformer that feeds 480-volt, three-phase power routed a short distance overhead to an above-grade rack. The rack is located on Christ United Methodist Church property and is installed in an enclosed shed. The rack secures a 200-ampere line disconnect switch, service meter (provided by Public Service Company of New Mexico), and service entrance disconnect. The shed and panels are always locked. Power from the service disconnect breaker feeds the well pump motor starter and a small power center for 120-volt devices. The well pump and flow-control valve are automated by the main control panel in the GWTS building. Control wiring for the well pump and other well instrumentation is installed in a conduit alongside the pipeline from the wellhead to the treatment plant. All controls are fed to the main control panel in the GWTS building.

For KAFB-106228, the groundwater flowmeter and a motor-actuated control valve are installed in the well vault for KAFB-106228. These instruments are used to regulate the groundwater extraction rate. The low profile, lockable well vault is concrete-constructed with H-20 traffic-rated cover and flush-mounted with the existing grade.

The conveyance line from this well is a 4-inch inner by 8-inch outer diameter double-wall, high-density polyethylene (HDPE) pipe. The inner wall is DR-11, while the outer wall is DR-17. The pipeline runs from the well vault under an unnamed alley that runs parallel to and just south of Gibson Boulevard. It crosses underneath Louisiana Boulevard onto Kirtland Air Force Base property and turns south to the valve vault. The valve vault is similar to the well vault and was installed initially to provide a connection

to the former temporary treatment system. The conveyance line then runs south and then southeast to the GWTS building. Air/vacuum relief valves and leak detection are installed in both the wellhead vault and the valve vault. Leak detection switches are installed in the annular space between the inner and outer walls of the double-wall pipe. These switches are installed in a flange on the end of the pipeline that is located in the wellhead vault.

D.1.2 KAFB-106233 and KAFB-106234

KAFB-106233 is located at the end of California Street SE near its intersection with Gibson Boulevard. The extraction well is 8 inches in diameter and is screened from 430 to 532 feet bgs. The well is equipped with a well pump (P-102) which is a 40 Hp, 22-stage submersible centrifugal pump (480-volt, three-phase) that is designed to pump between 20 to 180 gpm of groundwater. P-102 is set 15 feet above the bottom of the well screen.

KAFB-106234 is located at the southeast corner of the intersection of Anderson Avenue and Georgia Avenue. The extraction well is 8 inches in diameter and screened from 439.6 to 539.6 bgs. The well is equipped with a well pump (P-103) which is a 40-Hp, 22-stage submersible centrifugal pump (480-volt, three-phase) that is designed to pump between 20 to 180 gpm of groundwater. P-103 intake is set at 15 feet bgs feet above the bottom of the well screen.

Electrical power for KAFB-106233 and KAFB-106234 is supplied from the WCH through a 480-volt power cable installed in conduit buried alongside the groundwater pipeline from the wellhead to the GWTS. Signal wiring for the well level and leak detection is installed in a parallel conduit. All signals are connected to a panel in the WCH and transmitted by telemetry to the main control panel in the GWTS building.

The conveyance lines for wells KAFB-106233 and KAFB-106234 to the WCH are double-wall 4- by 8-inch HDPE pipe as was used for well KAFB-106228. Each pipe is sloped toward the well vault to ensure that any internal leaks will activate the leak-detection sensor in the secondary containment pipe. The conveyance line for KAFB-106233 runs from the well vault north under California Street, east under an alley, and turns north under the alley that runs between California Street and Dakota Street. The conveyance line turns east under Eastern Avenue, crosses under Louisiana Boulevard to the New Mexico Veterans Memorial, where it turns southeast towards the WCH and onto Kirtland AFB property. The conveyance for KAFB-106234 runs from the well vault east under Anderson Avenue and turns south under the alley that runs between Georgia Street and Indiana Street to Eastern Avenue. From there, it runs parallel to the line for well KAFB-106233.

The conveyance lines from KAFB-106233 and KAFB-106234 both go through a valve vault that is located under Eastern Avenue, where it intersects the alley between Georgia Street and Indiana Street. Air/vacuum relief valves are installed on both pipelines in this vault. Leak-detection switches are also installed in this vault. Air/vacuum relief valves and a pressure relief valve are also installed in the wellhead vault for both pipelines.

D.2 Well Control House

The WCH is located on Kirtland AFB near the New Mexico Veterans Memorial and Kirtland AFB Building 20183. This insulated steel-stud building with a stucco exterior is located at the closest point from Kirtland AFB property to the extraction wells. The building is heated and ventilated to protect equipment within. The building has a concrete slab floor with a curb for leak containment. The pipelines from KAFB-106233 and KAFB-106234 terminate into a piping manifold in the WCH that includes the sample points, flowmeters, and control valves for both wells. The piping manifold then combines the groundwater flow from the two wells and connects to an 8-inch by 12-inch diameter double-wall HDPE pipeline that runs from the WCH to the GWTS building. Leak-detection switches for the containment annulus are located in the WCH. Additional pressure gauges are installed on the outer wall of the influent

pipes from KAFB-106233 and KAFB-106234. While the well pumps are running, these gauges will show if there has been a breach in the inner wall pipe. Power to the WCH is supplied from a nearby underground 12,740-volt power service connected to a pad-mounted transformer that supplies 480-volt power to an electrical service rack that includes the reduced voltage (soft-start) motor starters for the well pumps and feeds the power cable that runs out to the pumps. The signal cables from the well and valve vaults terminate in a control panel in the WCH that communicates with the GWTS main control system by telemetry.

D.3 Groundwater Treatment System Building

The GWTS building is a single-story, free-standing 4,160-square foot (52 feet by 80 feet), non-sprinkled structure. The building has a covered (16 feet by 80 feet) truck-loading/unloading bay and a control room (12 feet by 12 feet) attached to the side of the main structure. The main control programmable logic controller (PLC) for the GWTS is installed in this control room. The PLC integrates all controls for the three extraction wells, the GWTS, and discharge to the golf course main pond (GCMP), injection well KAFB-7, and other future discharge points.

The building is constructed of conventional reinforced concrete masonry block walls supporting a steel bar joist roof. The floor slab is constructed as a reinforced concrete slab-on-grade with isolated spread footings provided as necessary to support the carbon beds and water tanks. The slab is designed to accommodate vehicle and/or fork-truck traffic/loading as well as loading from miscellaneous totes and equipment. A curb integral to the wall of the building is sealed to act as secondary containment. The containment is able to hold the liquid volume of the largest vessel in the facility if a pipe/tank should rupture. Stormwater runoff from the building, and surrounding drive and parking area, is diverted to a small run-off swale that, during heavy rain events, overflows to the street. The building includes an attached open-air truck-loading/unloading bay that is covered with a roof structure. The truck bay includes a concrete apron that will slope to a containment trench designed to capture approximately 5,000 gallons of water.

The building is heated to 50 degrees Fahrenheit and ventilated with exhaust fans. The heating system will prevent freezing of pipelines, and the location of control/electrical equipment is acceptable for proper electrical component operation. Additional utilities include a 6-inch-diameter non-potable water connection from the Kirtland AFB water-distribution system. This line supplies a 2-inch line inside the building that is used for general wash-down and carbon slurry fill operations, and a new fire hydrant installed on the southwest corner of the building site. A hose bibb (hydrant-style connector) is installed outside the building in the truck bay, which allows base personnel to fill water trucks with treated water for dust control.

A 480-volt, three-phase service is supplied by tapping into the existing 12,470-volt service line at Pennsylvania Avenue and Ridgecrest Street. An underground service line from a sectionalizer at Walker Street feeds a 500-kilovolt-ampere transformer located east of GWTS building. Underground cable connects the transformer to the main disconnect panel in the GWTS building. The electrical service panel in the building contains distribution equipment for the building and for the first 400-gpm train of the treatment system, and has additional space for a second treatment train. The control room also contains the main GWTS PLC and human machine interface (HMI) for the GWTS.

D.4 Carbon Treatment System

The GWTS uses carbon adsorption to remove contaminants from the influent groundwater from a maximum design influent ethylene dibromide concentration of 2.0 micrograms per liter (µg/L) to below the U.S. Environmental Protection Agency drinking water maximum contaminant level of 0.050 µg/L. Based on recent sampling of the groundwater from KAFB 106228, KAFB-106233, and KAFB-106234, the ethylene dibromide concentration in the combined influent to the GWTS is likely to be below

0.10 µg/L. Based on the results of quarterly sampling from monitoring wells near the three extraction wells, the influent to the treatment system should not contain any other contaminants above their respective maximum contaminant levels, Discharge Permit requirements, or other regulatory criteria. Dissolved metals are expected to be below maximum contaminant levels and the New Mexico Environmental Department discharge criteria.

The GWTS is designed and instrumented to efficiently operate 24 hours per day with minimal Operator attention needed. The system is monitored and controlled by a PLC-based system that includes telemetry and web access to alert operators to off-hour upset conditions and allow them to monitor the system. The design for the GWTS includes two parallel treatment trains, with one train currently installed. The second train is scheduled for installation in late 2016 in conjunction with the installation of additional groundwater extraction wells. The Process Flow Diagram and P&IDs for the GWTS are included in Appendix E. The components of the GWTS are described in the following paragraphs.

The GWTS feed tank (TK-110) is a 6,000-gallon storage tank that receives untreated water from the three well pumps. It is a flat-bottomed tank constructed of epoxy-coated carbon steel, 10 feet in diameter by 11 feet tall. The treated water storage tank (TK-116) is identical to the feed tank. Both tanks are fitted with level switches and level-indication instruments. Both tanks are vented into the GWTS building through screened vent caps. Additional details on the tanks are included in the Fliteway O&M Manual, which is included in Appendix J.

The feed pumps (P-112 A/B) for the pre-filters and carbon beds are two identical centrifugal pumps sized for 200 gpm each. Having two smaller pumps provides better turndown for the system while it is operating with only one groundwater extraction well. The pumps are horizontal, American National Standards Institute style pumps (Goulds 3196 MTI 2x3-6) with stainless steel wetted parts and mechanical seals. The pumps have 15-Hp motors and are rated for 100 feet of total discharge head. The feed pumps and the pre-filters were supplied by Fliteway as a pre-piped, skid-mounted system that includes flowmeters and other instruments. The flow from each pump is controlled by a separate variable frequency drive (VFD) controlling the pump speed. The flowmeter on the skid (FIT-3102) is a V-cone, differential-pressure device.

The pre-filters for the carbon beds (F-112 A/B) are two bag-filter housings piped in parallel. Each housing holds six, 30-inch by 6-inch diameter filter bags rated at nominal 10-micron filtration. The filter housings are epoxy-coated carbon steel with stainless steel baskets. A davit support for the filter housing lid is provided for supporting the lid during filter bag change-out. The post-filters have an identical setup. Additional information on the pump-filter skids is included in the Fliteway O&M Manual.

The two carbon vessels (V-114 A/B) are 10 feet in diameter, and each can be loaded with 20,000 pounds of activated carbon. They are constructed of epoxy-lined carbon steel and fitted with a common valve manifold that allows either bed to operate in the lead/lag position. The valve manifold also allows for backwashing of the carbon beds and allows operation with only one bed online. The valves on the manifold are gear-driven 8-inch butterfly valves. The valve position (open/closed) for different operating modes is in the TIGG O&M Manual and are also shown in Appendix J. Since the GWTS may be operated at less than its design capacity, the groundwater-flow distributors on the carbon beds are designed to minimize channeling at low flow rates. Flow distributors and other internals in the carbon vessels are constructed of stainless steel, not polyvinyl chloride. The carbon vessels are American Society of Mechanical Engineers-code vessels rated for 125 pound per square inch gauge. Additional information on the carbon adsorbers is included in the TIGG O&M Manual in Appendix J. Each vessel is loaded with 20,000 pounds of TIGG 5DC 12-40 NSF-grade carbon. The size range for the carbon is 12 to 40 mesh.

The discharge pump (P-118) is a single pump rated for 400 gpm. It is a horizontal American National Standards Institute-style centrifugal pump (Goulds 3196 MTI 3x4-10H) with stainless steel wetted parts and a mechanical seal. The pump has a 20-Hp motor and is rated for 400 gpm at 80 feet of total discharge

head. The discharge pump skid has similar instrumentation as the feed pump skid. The flow from the discharge pump is controlled by a VFD controlling the pump speed. The flowmeter on the skid (FIT-3108) is a V-cone, differential-pressure device. The post -filters (F-118 A/B) are identical to the pre-filters. Additional information on the pump-filter skids is included in the Fliteway O&M Manual.

D.5 Treated Water Discharge

Treated water from the GWTS is pumped through almost 2 miles of below-grade, 12-inch single-wall HDPE discharge line to a tee connection installed on an existing base pipeline that connects well KAFB-7 to the Tijeras Arroyo Golf Course Main Pond (GCMP). Five small valve vaults are installed at roughly 2,000-foot intervals along the discharge line that house air/vacuum relief valves. The existing KAFB-7-to-GCMP pipeline includes both 14-inch polyvinyl chloride pipe and 12-inch HDPE pipe. The section where the tee connects the treated water pipeline to the KAFB-7 line is 12-inch HDPE. As shown on the P&IDs, there are two manual valves, one each on either side of the tee, that have been installed on the KAFB-7 line. These valves allow the operators to direct the treated water to either the GCMP or to KAFB-7. Filling the GCMP is a manual operation. The treatment system staff will manually drive to switch the position of the pipeline valves as necessary. GCMP level is reported on the HMI and a high-level switch at the pond will shut down the treatment system to prevent overflowing the pond. The signal from the high-level switch is transmitted to the GWTS control system by telemetry.

KAFB-7 was originally a drinking water well but was taken out of this service and used as an extraction well due to high nitrates in the groundwater at this location. During its operation as an extraction well, KAFB-7 discharged water to the GCMP that was used to irrigate the golf course. KAFB-7 has temporarily been converted into a pilot injection well for discharge of the treated groundwater. The line-shaft well pump has been removed from the well, and a 4-inch-diameter drop pipe has been installed in its place. The drop pipe terminates at 525 feet bgs, roughly 25 feet below the static water level. At the bottom of the drop pipe, there is a downhole control valve (V-smart valve) that regulates the flow of groundwater into the well. The purpose of this valve is to control the pressure in the drop pipe at the top of the well to between 5 and 25 pound per square inch gauge. This ensures that the drop pipe is full of water, and there is no damage to the pipe due to cavitation. The control valve is modulated by a hydraulic pump system installed in the existing KAFB-7 WCH. This hydraulic system is controlled by the GWTS PLC, which uses both the VFD on the treated water discharge pump and the hydraulic system to control the injection flow rate while maintaining pressure at the top of the drop pipe. A level transducer in the well sends water level in the well to the GWTS PLC. A control panel in the KAFB-7 WCH communicates with the PLC by telemetry.

THIS PAGE INTENTIONALLY LEFT BLANK

APPENDIX E

Process Drawings and GWTS Equipment/Instrument Location Pictures

THIS PAGE INTENTIONALLY LEFT BLANK

IDENTIFICATION LETTERS

	FIRST–LETTER		SUCCEEDING–LETTERS		
	MEASURED OR INITIATING VARIABLE	MODIFIER	READOUT OR PASSIVE FUNCTION	OUTPUT FUNCTION	MODIFIER
A	ANALYSIS		ALARM		
B	BURNER, COMBUSTION		USER'S CHOICE	USER'S CHOICE	USER'S CHOICE
C	USER'S CHOICE			CONTROL	CLOSE, CLOSED
D	USER'S CHOICE	DIFFERENTIAL			
E	VOLTAGE		SENSOR (PRIMARY ELEMENT)		
F	FLOW RATE	RATIO, FRACTION			
G	USER'S CHOICE		GLASS, VIEWING DEVICE, GAUGE		
H	HAND	HAND			HIGH
I	CURRENT (ELECTRICAL)		INDICATE (ANALOG)		
J	POWER	SCAN			
K	TIME, TIME SCHEDULE	TIME RATE OF CHANGE		CONTROL STATION	
L	LEVEL		LIGHT, STATUS		LOW, LIGHT, STATUS
M	USER'S CHOICE	MOMENTARY			MIDDLE,INTERMEDIATE
N	USER'S CHOICE		USER'S CHOICE	USER'S CHOICE	USER'S CHOICE
O	USER'S CHOICE		ORIFICE RESTRICTION		OPEN
P	PRESSURE, VACUUM		POINT (TEST CONNECTION)		
Q	QUANTITY, HEAT	INTEGRATE, TOTALIZE			
R	RADIATION, RESTRICTION		RECORD		
S	SPEED, FREQUENCY	SAFETY		SWITCH	
T	TEMPERATURE			TRANSMIT	MULTIFUNCTION
U	MULTIVARIABLE		MULTIFUNCTION	MULTIFUNCTION	
V	VIBRATION, MECHANICAL ANALYSIS			VALVE, DAMPER, LOUVER	
W	WEIGHT, FORCE		WELL		
X	UNCLASSIFIED	X AXIS	UNCLASSIFIED	UNCLASSIFIED	UNCLASSIFIED
Y	EVENT, STATE OR PRESENCE	Y AXIS		RELAY, COMPUTE, CONVERT, SOLENOID	
Z	POSITION, DIMENSION	Z AXIS, POSITION, DIMENSION	POSITION, DIMENSION	DRIVER, ACTUATOR, UNCLASSIFIED FINAL CONTROL ELEMENT	

SPECIAL ABBREVIATIONS

APC – ADVANCED PROCESS CONTROL
ATM – ATMOSPHERE
CEMS – CONTINUOUS EMISSION MONITORING SYSTEMS
CO – CARBON MONOXIDE
D/P – DIFFERENTIAL PRESSURE
PCS – PROCESS CONTROL SYSTEM
DEEN – DEENERGIZE
DISP – DISPLACEMENT
EN – ENERGIZE
FF – FOUNDATION FIELD BUS
FG – SIGHT GLASS
FGPLC – FIRE AND GAS DETECTION PLC
FO – FLOW ORIFICE
GC – GAS CHROMATOGRAPH
GWR – GUIDED WAVE RADAR
H2 – HYDROGEN
H2S – HYDROGEN SULFIDE
HOA – HAND SELECTOR SWITCH (HAND–OFF–AUTO)
HSL – SWITCH(ES) AND LIGHT(S)
INT – INTERFACE
MAG – MAGNETIC
MMS – MACHINERY MONITORING SYSTEM
NOX – NITROUS OXIDE
O2 – OXYGEN GAS
PLC – PROGRAMMABLE LOGIC CONTROLLER
PP – PRESSURE SENSING POINT
PSE – RUPTURE DISK
PSV – PRESSURE OR VACUUM SAFETY RELIEF VALVE
PVSV – PRESSURE–VACUUM SAFETY RELIEF VALVE
RO – RESTRICTION ORIFICE
RTD – RESISTANCE TEMPERATURE DETECTOR
SIS – SAFETY INSTRUMENTED SYSTEM
TJI – MULTIPOINT TEMPERATURE INDICATOR (NON DCS)
TJR – MULTIPOINT TEMPERATURE RECORDER (NON DCS)
TJT – MULTIPOINT TEMPERATURE TRANSMITTER
TW – THERMOWELL OR TEST WELL
UK – PANEL, CONSOLE, OR RACK
XE – FLAME ARRESTOR
XV – SPECIAL VALVES NOT PART OF A MEASURED VARIABLE LOOP–eg ON–OFF VALVES, MOTOR OPERATED VALVES, IN–LINE SOLENOID VALVES, EXCESS FLOW VALVES

TYPICAL TAG NUMBER FORMAT

PDC YZZA
- MEASURED VARIABLE LETTERS
- FIRST MODIFIER LETTER(S)
- FUNCTION LETTER (MAY BE FOLLOWED BY SECOND MODIFIER LETTERS)
- PARALLEL BRANCH OR MULTIPLE COMPONENT SUFFIX
- LOOP SEQUENCE NUMBER 000 TO 999
- ALL INSTRUMENT TAGS PRECEEDED BY UNIT 1= CDHYDRO, 2= CDHDS, 3= POLISHING REACTOR, 7= UTILITIES

DCS SUB–FUNCTION

* * SYMBOLS FOR DCS SUB–FUNCTIONS
D — DEVIATION ALARM
HH — HIGH–HIGH ALARM
H — HIGH ALARM
L — LOW ALARM
LL — LOW–LOW ALARM
Mo3 — MIDDLE OF THREE

SIGNAL TYPES

OP — OUTPUT
PV — PROCESS VARIABLE
SP — SETPOINT

INSTRUMENT LINE DESIGNATIONS

- INSTRUMENT SUPPLY OR CONNECTION TO PROCESS
- PNEUMATIC SIGNAL
- ELECTRIC SIGNAL
- HYDRAULIC SIGNAL
- IA — INSTRUMENT AIR
- CAPILLARY TUBE
- ELECTROMAGNETIC OR SONIC SIGNAL (GUIDED)
- INTERNAL SYSTEM LINK
- MECHANICAL LINK
- ** — INSTRUMENT PURGE (**) PURGE MEDIUM (SERVICE ABBREVIATION) SEE "INSTRUMENT PURGE DETAIL"

INSTRUMENT SYMBOL IDENTIFICATION & REPRESENTATION

- LOCAL INSTRUMENT OR FUNCTION ONLY
- INSTRUMENT ON PANEL OR HARD CONSOLE IN CONTROL ROOM
- INSTRUMENT ON RACK OR REAR OF PANEL IN CONTROL ROOM
- INSTRUMENT ON LOCAL PANEL
- INSTRUMENT ON REAR LOCAL PANEL
- SIS UCXX — SIS INTERLOCK; XX= INTERLOCK NUMBER
- FGS UCXX — FGS MONITORING; XX= INTERLOCK/LOGIC NUMBER
- DISPLAY PROCESS CONTROL SYSTEM (PCS) FUNCTION IN CONTROL ROOM
- DISPLAY PROCESS CONTROL SYSTEM (PCS) FUNCTION NON–DISPLAY
- DISCRETE HARDWARE INTERLOCK
- 130 — SYSTEM FOR LOGIC FUNCTION(S) OR COMPLEX ADVANCED CONTROL SYSTEMS
- Y= SYSTEM/PACKAGED EQUIPMENT CONTROL NUMBER
- PLCX UCXX — PLC LOGIC; XX= INTERLOCK/LOGIC NUMBER
- PCS UCXX — PCS LOGIC; XX= INTERLOCK/LOGIC NUMBER

COMPUTER FUNCTION AND LOGIC SYSTEMS

- FIELD MOUNTED COMPUTER FUNCTION
- PANEL OR HARD CONSOLE COMPUTER FUNCTION
- LOCAL PANEL COMPUTER FUNCTION
- BATCH OR SEQUENTIAL LOGIC PROGRAMMABLE FUNCTION IN CONTROL ROOM
- PROGRAMMABLE LOGIC CONTROL FUNCTION LOCAL
- PROGRAMMABLE LOGIC CONTROL FUNCTION WHEN PART OF PCS
- PROGRAMMABLE LOGIC CONTROL FUNCTION NON–DISPLAY
- PROGRAMMABLE LOGIC CONTROL FUNCTION ON LOCAL PANEL

INSTRUMENT PURGE DETAIL

FI — NOTE 3; PIPING SPEC; INSTRUMENT TUBING

MATH FUNCTIONS

* * SYMBOLS FOR MATH FUNCTION
Σ SUM
Δ DIFFERENCE
X MULTIPLY
— DIVIDE
> HIGH SELECT
< LOW SELECT
√ EXTRACT SQUARE ROOT
REV REVERSE
± BIAS
Σ/n AVERAGE
⋗ HIGH LIMIT
⋖ LOW LIMIT
SW SWITCH
K PROPORTIONAL
f(x) UNSPECIFIED FUNCTION
∫ INTEGRATION
X^n EXPONENTIAL
d/dt DERIVATIVE
–k INVERSE
f(t) TIME FUNCTION

CONTROL VALVE TYPE

- GENERAL CONTROL VALVE GLOBE
- BALL OR PLUG (OPTIONAL)
- DIAPHRAGM (OPTIONAL)
- BUTTERFLY (OPTIONAL)
- THREE WAY GLOBE NOTE 6
- FOUR WAY GLOBE NOTE 6

CONVERTERS

(OPTIONAL)

/ SYMBOLS FOR CONVERTERS (INPUT/OUTPUT)
A — ANALOG
D — DIGITAL
E — VOLTAGE
H — HYDRAULIC
I — CURRENT
P — PNEUMATIC

CONTROL ACTUATORS

NOTE 6

- SPRING AND DIAPHRAGM
- * SYMBOL INDICATES TYPE: M — ELECTRIC MOTOR; S — SOLENOID; E — ELECTRIC–HYDRAULIC; H — HYDRAULIC
- PISTON TYPE – SINGLE ACTING
- PISTON TYPE – DOUBLE ACTING

COMPUTER FUNCTIONS

(OPTIONAL)

* SYMBOLS FOR COMPUTER FUNCTIONS
DDC – DIRECT DIGITAL CONTROL
SPC – SUPERVISORY SETPOINT CONTROL
DI – DIGITAL INPUT
DO – DIGITAL OUTPUT
AI – ANALOG INPUT
AO – ANALOG OUTPUT

MANUAL OPERATORS

- CONTROL VALVE WITH HANDWHEEL
- SOLENOID VALVE WITH MANUAL RESET
- SOLENOID VALVE WITH REMOTE RESET

ADDITIONAL INFORMATION

A/B — SPLIT RANGE DESIGNATION
"A"– FIRST VALVE TO RESPOND TO INCREASING CONTROL SIGNAL
"B"– SECOND VALVE TO RESPOND TO INCREASING CONTROL SIGNAL

2" — VALVE SIZE

FO — FAIL OPEN
FC — FAIL CLOSED
FL — FAIL LOCKED (LAST POSITION)
FL(O) — FAIL LOCKED (LAST POSITION) VALVE OPENS ON DECREASING CONTROL SIGNAL
FL(C) — FAIL LOCKED (LAST POSITION) VALVE CLOSES ON DECREASING CONTROL SIGNAL

TSO — TIGHT SHUT–OFF

INLINE FLOW INSTRUMENTS

- ORIFICE PLATE OR FLOW ORIFICE
- ORIFICE PLATE IN QUICK CHANGE FITTINGS
- VENTURI FLOW TUBE
- FLOW NOZZLE
- WEIR
- FLOW STRAIGHTENING VANES
- FLUME
- FI — ROTAMETER
- WEDGE
- C — CORIOLIS MASS FLOW METER
- TARGET TYPE SENSOR
- AVERAGING PITOT TUBE OR ANNUBAR
- INLINE SIGHT GLASS
- TURBINE / PROPELLER METER
- POSITIVE DISPLACEMENT FLOW TOTALIZING INDICATOR
- VORTEX SENSOR
- SONIC FLOW METER
- M — MAGNETIC FLOW METER
- TH — THERMAL DISPERSION FLOW METER
- DIAPHRAGM SEALS FLUSH MOUNTED WITH PIPE ROOT VALVE

SELF ACTUATED DEVICES

- PSE — PRESSURE RELIEF RUPTURE DISK
- PSE — VACUUM RELIEF RUPTURE DISK
- L — INTERNAL FLOAT TYPE LEVEL INSTRUMENT
- TCV — TEMPERATURE REGULATOR
- PCV — UPSTREAM CONN. FOR BACK PRESSURE DOWNSTREAM CONN. FOR PRESSURE REDUCING; PRESSURE REGULATOR WITH EXTERNAL PRESSURE TAP
- PCV — UPSTREAM CONN. FOR BACK PRESSURE DOWNSTREAM CONN. FOR PRESSURE REDUCING; PRESSURE REGULATOR SELF–CONTAINED
- PDCV — REGULATOR WITH INTERNAL AND DIFFERENTIAL PRESSURE REDUCING EXTERNAL PRESSURE TAPS
- PSV — (SIZE) (PRESSURE) NOTE 9 — SAFETY RELIEF VALVE
- PSV — (SIZE) (PRESSURE) NOTE 9 — VACUUM RELIEF VALVE
- PVSV — (SIZE) (PRESSURE) — PRESSURE AND VACUUM SAFETY RELIEF VALVE (CONSERVATION VENT)
- PSV — INDICATE INTERNAL OR EXTERNAL TAPPING; PILOT OPERATED SAFETY RELIEF VALVE (PRESSURE TAP CONNECTED TO VALVE BODY OR LINE/VESSEL AS REQUIRED.)
- RELIEVING MANHOLE COVER * INDICATED TYPE PSV – PRESSURE OR VACUUM RELIEF PVSV – PRESSURE–VACUUM RELIEF
- LI — FLOAT AND TAPE TYPE LEVEL INDICATOR OR TRANSMITTER FOR STORAGE TANKS
- ARV — AIR/VACUUM RELIEF VALVE

GENERAL NOTES

1. THE INSTRUMENTATION REPRESENTATION ON P&ID'S, AS PER ABBREVIATED ISA SYMBOLOGY. COMPLEX OR UNUSUAL LOOPS ARE DEPICTED WITH INDIVIDUAL COMPONENT BALLOONS AS REQUIRED FOR CLARITY.
2. SAFE OPERATION OF ANY SYSTEM WITH BLOCK VALVES ON THE INLET OR OUTLET LINES OF RELIEVING DEVICES REQUIRE ADMINISTRATIVE CONTROLS WHICH ARE TOTALLY UNDER THE CONTROL AND RESPONSIBILITY OF THE OWNER.

MISCELLANEOUS

- INDICATING LIGHT
- T — T — DUPLEX TEMPERATURE ELEMENT
- T — SKIN — SKIN TYPE TEMPERATURE ELEMENT
- TT — TE — TW — ACTUAL DEPICTION TE, TW NOT SHOWN ON P&ID.
- S — SOLENOID OPERATED VALVE ARROW INDICATES DE–ENERGIZED POSITION NOTE 5
- IA — PILOT CABINET — PILOT OPERATED OR ASSISTED RELIEF VALVE WITH PILOT CABINET

THIS ASBUILT (RECORD DRAWING) HAS BEEN PREPARED, IN PART, BASED UPON INFORMATION FURNISHED BY OTHERS. WHILE THIS INFORMATION IS BELIEVED TO BE RELIABLE, CB&I ASSUMES NO RESPONSIBILITY FOR THE ACCURACY OF THIS RECORD DRAWING OR FOR ANY ERRORS OR OMISSIONS THAT MAY HAVE BEEN INCORPORATED INTO IT AS A RESULT OF INCORRECT INFORMATION PROVIDED TO CB&I. THOSE RELYING ON THIS RECORD DOCUMENT ARE ADVISED TO OBTAIN INDEPENDENT VERIFICATION OF ITS ACCURACY.

PROFESSIONAL SEAL

U.S. ARMY CORPS OF ENGINEERS
ALBUQUERQUE DISTRICT
ALBUQUERQUE, NEW MEXICO

CB&I FEDERAL SERVICES LLC
312 DIRECTORS DRIVE
KNOXVILLE, TENNESSEE 37923
865-690-3211

CLIENT DWG NO:

NOTES

REFERENCE DRAWINGS	NO.	REVISION	DRAWN	CK'D	APPD	DATE
	1	RECORD DRAWING	CFB	SES	BAH	03/25/16
	0	ISSUED FOR CONSTRUCTION	EGA	SES	BAH	03/30/15

THIS DOCUMENT IS THE PROPERTY OF CHICAGO BRIDGE & IRON COMPANY ("CB&I"). IT MAY CONTAIN INFORMATION DESCRIBING TECHNOLOGY OWNED BY CB&I AND DEEMED TO BE COMMERCIALLY SENSITIVE. IT IS TO BE USED ONLY IN CONNECTION WITH WORK BEING PERFORMED BY CB&I. REPRODUCTION IN WHOLE OR IN PART FOR ANY PURPOSE OTHER THAN WORK PERFORMED BY CB&I IS FORBIDDEN EXCEPT BY EXPRESS WRITTEN PERMISSION OF CB&I. IT IS TO BE SAFEGUARDED AGAINST BOTH DELIBERATE AND INADVERTENT DISCLOSURE TO ANY THIRD PARTY.

DRAWN: EGA | CK'D: SES | APPD: BAH | DATE: 03/30/15 | SCALE: NONE

PROCESS LEAD SHEET
INST. SYMBOLS, LEGENDS & ABBREVIATIONS
PHASE IV MID–PLUME PUMP & TREAT SYSTEM

FOR: BULK FUELS FACILITY, KIRTLAND AFB, NM

PROJECT NO: 140705 | DWG NO: 140705–001–PR–03–400011 | REV: 1

Form: CMS–830–00–FM–02104 CB ANSI D.dwg

File: 140705–001–PR–03–400011.DWG.dwg
Plot Date/Time: Mar 21, 2016 – 2:20pm
Plotted By: charles.bentley

THIS PAGE INTENTIONALLY LEFT BLANK

MISCELLANEOUS ABBREVIATIONS

AG	ABOVE GROUND
ATM	ATMOSPHERE
BFW	BOILER FEED WATER
BL	BATTERY LIMIT
BV	BY VENDOR
CO	CLEAN OUT
CSC	CAR SEALED CLOSE
CSO	CAR SEALED OPEN
D	DRAIN
DEC	DETAILED ENGINEERING CONTRACTOR (COMPANY)
DMDS	DIMETHYL DISULFIDE
EPC	ENGINEERING PROCUREMENT AND CONSTRUCTION
FP	FULL PORT
GO	GEAR OPERATED
HC	HOSE CONNECTION
HCN	HEAVY CAT NAPHTHA
HH	HANDHOLE
ISBL	INSIDE BATTERY LIMIT
LC	LOCKED CLOSED
LCN	LIGHT CAT NAPHTHA
LO	LOCKED OPEN
LP	LOW PRESSURE
MAX	MAXIMUM
MIN	MINIMUM
MP	MEDIUM PRESSURE
MW	MANWAY
MH	MANHOLE
NC	NORMALLY CLOSED
NNF	NORMALLY NO FLOW
NO	NORMALLY OPEN
OSBL	OUTSIDE BATTERY LIMIT
RO	ROD OUT
RSP	REMOVABLE SPOOL PIECE
S	SAMPLE CONNECTION
SC	SAMPLE CONN WITH COOLER
SO	STEAM OUT
SP	SPECIALTY ITEM
TL	TANGENT LINE
TL/TL	TANGENT TO TANGENT
TP	TIE-IN POINT
TS	TEMPORARY STRAINER
TYP	TYPICAL
UC	UTILITY CONNECTION
UG	UNDERGROUND
V	VENT

PIPELINE IDENTIFICATION

6" CS SCH 40 H

- INSULATION CLASSIFICATION (OPTIONAL)
- SCHEDULE/THICKNESS
- MATERIAL SPECIFICATION
- LINE SIZE

INSULATION CLASSIFICATION

A	ACOUSTICAL INSULATION (NOTE 5)	N	NO INSULATION
C	ANTICONDENSATION	P	PERSONNEL PROTECTION
E	ELECTRICAL TRACING	R	CONTRATRACE
F	COLD INSULATION	S	STEAM TRACING
H	HEAT CONSERVATION	T	HOT OIL TRACING
I	WINTERIZING/ANTIFREEZING	V	UNINSULATED TRACER
J	JACKETING	Z	PAINTING

TRACING LEGEND

EP	ELECTRICAL TRACING FOR PROCESS REASONS
EW	ELECTRICAL TRACING FOR WINTERIZATION
TL	TRACING WITH LP STEAM (STABILIZATION)
TM	TRACING WITH MP STEAM
TS	SPACER TRACING WITH LP STEAM
TW	TRACING WITH HOT WATER OR OIL (WINTERIZATION)

MATERIAL SPECIFICATION

CS	CARBON STEEL ASTM53
HDPE	HIGH DENSITY POLYETHYLENE, PE 3408
CU	COPPER
PVC	POLYVINYL CHLORIDE

DRAWING NUMBER IDENTIFICATION

001-PR -03-400012

- SEQUENCE NUMBER
- DRAWING CODE
- DISCIPLINE CODE
- UNIT NUMBER

PIPING LINES

PIPELINE TO/FROM DRAWING OF ANOTHER UNIT

UNDERGROUND PIPING (BURIED LINE)

TRACING
REFER TO TRACING LEGEND FOR XX VALUES

JACKETED LINE

VENDOR PACKAGE BOUNDARY

BATTERY LIMIT

(UG) SPEC (AG) SPEC

GATE/GENERAL VALVE

VALVE WITH PLUG

VALVE WITH BLIND FLANGE

BUTTERFLY VALVE

DIAPHRAGM VALVE

GLOBE VALVE

NEEDLE VALVE

PLUG VALVE

BALL VALVE

CHECK VALVE

STOP CHECK VALVE (BOILER NON-RETURN VALVE)

THREE WAY VALVE

ANGLE VALVE

RAM TYPE VALVE (SPECIALTY ITEM)

MECH. LINK — INTERLOCKED VALVES (MECHANICAL LINK)

SPRING LOADED QUICK OPENING OR CLOSING VALVE

SLIDE VALVE

SLOPE — SLOPE INDICATION

FREE DRAINING — FREE DRAINING

PIPING SYMBOLS

OUTSIDE BATTERY LIMIT

DWG.NO. — CONTINUITY ARROW

BLIND FLANGE

PIPE CAP (WELDED)

ECCENTRIC REDUCER

CONCENTRIC REDUCER

SP XYZZ — STRAINER

TS — TEMPORARY STRAINER

CONE TYPE STRAINER

T-TYPE STRAINER

Y-TYPE STRAINER

REMOVABLE SPOOL

BLINDING POINT

SPACER FOR BLIND

LINE BLIND (SPADE)

REVERSIBLE BLIND (OPEN) (FIGURE EIGHT)

REVERSIBLE BLIND (CLOSED) (FIGURE EIGHT)

XXX XXX — SPEC BREAK
XXX – PIPING SPEC

MIN — MINIMUM DISTANCE

DUCT OR STACK DAMPER

XX — OPEN SERVICE DRAIN
XX – SERVICE SYMBOL

XX — CLOSED SERVICE DRAIN
XX – SERVICE SYMBOL

ATMOSPHERIC VENT

SAFETY AND FIRE WATER PROTECTION

SAFETY SHOWER

EYE WASH

GATE VALVE WITH POST INDICATOR

HH — HOSE CONNECTION

HR — HOSE REEL

FIRE HYDRANT

FIRE MONITOR

FLANGED CONNECTION

HOSE CONNECTION

FLEXIBLE HOSE

EXPANSION JOINT

INLINE MIXER

EXHAUST HEAD

T — STEAM TRAP/DRAIN TRAP (NON PROCESS)

SP XYZZ — T — CONTINUOUS DRAINER

EDUCTOR OR EJECTOR

SP XYZZ — PIPING SPECIALTY ITEM
- ZZ- SEQUENCE NUMBER
- Y- AREA NUMBER (1=100, 2=200,...7=700)
- X- UNIT NUMBER

SC XYZZ — SAMPLE CONN OR (WITH COOLER)
- ZZ- SEQUENCE NUMBER
- Y- AREA NUMBER (1=100, 2=200,...7=700)
- X- UNIT NUMBER

IP-INDEX-XXX-YYY-ZZZZ — DISCIPLINE INDEX CODE (P1, P2)
- SEQUENCE NUMBER
- INTERCONNECTING UNIT
- ORIGINATING ISBL UNIT NUMBER

D — DRAIN PORT WITH VALVE

S — SAMPLE PORT WITH VALVE

AIR FILTER WITH HOOD

FLAME ARRESTOR

GRADE

FUNNEL

VENT

GENERAL NOTES

THIS ASBUILT (RECORD DRAWING) HAS BEEN PREPARED, IN PART, BASED UPON INFORMATION FURNISHED BY OTHERS. WHILE THIS INFORMATION IS BELIEVED TO BE RELIABLE, CB&I ASSUMES NO RESPONSIBILITY FOR THE ACCURACY OF THIS RECORD DRAWING OR FOR ANY ERRORS OR OMISSIONS THAT MAY HAVE BEEN INCORPORATED INTO IT AS A RESULT OF INCORRECT INFORMATION PROVIDED TO CB&I. THOSE RELYING ON THIS RECORD DOCUMENT ARE ADVISED TO OBTAIN INDEPENDENT VERIFICATION OF ITS ACCURACY.

PROFESSIONAL SEAL

U.S. ARMY CORPS OF ENGINEERS
ALBUQUERQUE DISTRICT
ALBUQUERQUE, NEW MEXICO

CB&I FEDERAL SERVICES LLC
312 DIRECTORS DRIVE
KNOXVILLE, TENNESSEE 37923
865-690-3211

CLIENT DWG NO:

NOTES

REFERENCE DRAWINGS	NO.	REVISION	DRAWN	CK'D	APPD	DATE
	1	RECORD DRAWING	CFB	SES	BAH	03/25/16
	0	ISSUED FOR CONSTRUCTION	EGA	SES	BAH	03/30/15

THIS DOCUMENT IS THE PROPERTY OF CHICAGO BRIDGE & IRON COMPANY ("CB&I"). IT MAY CONTAIN INFORMATION DESCRIBING TECHNOLOGY OWNED BY CB&I AND DEEMED TO BE COMMERCIALLY SENSITIVE. IT IS TO BE USED ONLY IN CONNECTION WITH WORK BEING PERFORMED BY CB&I. REPRODUCTION IN WHOLE OR IN PART FOR ANY PURPOSE OTHER THAN WORK PERFORMED BY CB&I IS FORBIDDEN EXCEPT BY EXPRESS WRITTEN PERMISSION OF CB&I. IT IS TO BE SAFEGUARDED AGAINST BOTH DELIBERATE AND INADVERTENT DISCLOSURE TO ANY THIRD PARTY.

DRAWN: EGA | CK'D: SES | APPD: BAH | DATE: 03/30/15 | SCALE: NONE

PROCESS LEAD SHEETS
INST. SYMBOLS, LEGENDS & ABBREVIATIONS
PHASE IV MID-PLUME PUMP & TREAT SYSTEM

FOR: BULK FUELS FACILITY, KIRTLAND AFB, NM

PROJECT NO: 140705 | DWG NO: 140705-001-PR-03-400012 | REV: 1

File: 140705-001-PR-03-400012.DWG.dwg
Plot Date/Time: Mar 21, 2016 - 2:22pm
Plotted By: charles.bentley

Form: CMS-830-00-FM-02104 CB ANSI D.dwg

THIS PAGE INTENTIONALLY LEFT BLANK

PUMPS/AGITATORS

- CENTRIFUGAL/INLINE PUMP (MOTOR DRIVEN)
- CENTRIFUGAL/INLINE PUMP (TURBINE DRIVEN)
- BLOWER
- SUMP PUMP
- SUBMERSIBLE PUMP
- CAN PUMP
- DIAPHRAGM PUMP
- ROTARY PUMP
- METERING PUMP
- SCREW/PROGRESSIVE CAVITY PUMP
- AGITATOR

DRIVERS

- ELECTRIC MOTOR
- DIESEL DRIVE – D
  AIR MOTOR – A
  HYDRAULIC MOTOR – H
- STEAM TURBINE

PROCESS EQUIPMENT

- VERTICAL SHELL AND TUBE EXCHANGER AS PER TEMA
- TRAYED TOWER TRAY NUMBERING AS DEPICTED (1, 2, 3, 4)
- VORTEX BREAKER
- TL
- DIM. TO GRADE
- SHELL AND TUBE EXCHANGER AS PER TEMA
- TOWER/VESSEL WITH PROCESS PACKING
- SHELL AND TUBE EXCHANGER AS PER TEMA
- TOWER/VESSEL WITH DEMISTER PAD
- SHELL AND TUBE EXCHANGER AS PER TEMA
- AIR COOLER
- SHELL AND TUBE EXCHANGER AS PER TEMA
- AIR COOLER W/LOUVER
- SHELL AND TUBE EXCHANGER AS PER TEMA
- SINGLE FILTER
- KETTLE EXCHANGER AS PER TEMA
- MECH LINK
- DUPLEX FILTER
- KETTLE EXCHANGER AS PER TEMA
- CENTRIFUGAL COMPRESSOR
- DOUBLE PIPE HEAT EXCHANGER
- SCREW TYPE COMPRESSOR
- SPIRAL HEAT EXCHANGER
- RECIPROCATING COMPRESSOR
- CORE (DOUBLE PLATE) EXCHANGER
- PLATE & FRAME EXCHANGER
- CORE & KETTLE EXCHANGER
- MH
- HH
- STORAGE TANK WITH CONE ROOF
- STORAGE TANK WITH DISH ROOF
- STORAGE TANK WITH INTERNAL FLOATING ROOF

EQUIPMENT CLASS

F	FIRED HEATERS
T	TOWERS – SHELLS
R	REACTORS AND COKE DRUMS
E	HEAT EXCHANGERS – SHELL AND TUBE
AC	HEAT EXCHANGE EQUIPMENT SPECIAL (AIR COOLERS)
STR	STRAINERS AND COALESCERS
FG	LINE FILTERS AND SILENCERS
P	PUMPS AND DRIVES
C	COMPRESSORS AND BLOWERS
M	STEAM SPECIALTIES – DESUPERHEATERS LINE SEPARATORS
PA	PACKAGE UNITS AND SPECIAL EQUIPMENT
TK	TANK
AD	SUMP
J	EDUCTOR
EH	ELECTRIC HEATER

GENERAL NOTES

THIS ASBUILT (RECORD DRAWING) HAS BEEN PREPARED, IN PART, BASED UPON INFORMATION FURNISHED BY OTHERS. WHILE THIS INFORMATION IS BELIEVED TO BE RELIABLE, CB&I ASSUMES NO RESPONSIBILITY FOR THE ACCURACY OF THIS RECORD DRAWING OR FOR ANY ERRORS OR OMISSIONS THAT MAY HAVE BEEN INCORPORATED INTO IT AS A RESULT OF INCORRECT INFORMATION PROVIDED TO CB&I. THOSE RELYING ON THIS RECORD DOCUMENT ARE ADVISED TO OBTAIN INDEPENDENT VERIFICATION OF ITS ACCURACY.

PROFESSIONAL SEAL

U.S. ARMY CORPS OF ENGINEERS
ALBUQUERQUE DISTRICT
ALBUQUERQUE, NEW MEXICO

CB&I FEDERAL SERVICES LLC
312 DIRECTORS DRIVE
KNOXVILLE, TENNESSEE 37923
865-690-3211

CLIENT DWG NO:

NOTES

REFERENCE DRAWINGS	NO.	REVISION	DRAWN	CK'D	APPD	DATE
	1	RECORD DRAWING	CFB	SES	BAH	03/25/16
	0	ISSUED FOR CONSTRCUTION	EGA	SES	BAH	03/30/15

THIS DOCUMENT IS THE PROPERTY OF CHICAGO BRIDGE & IRON COMPANY ("CB&I"). IT MAY CONTAIN INFORMATION DESCRIBING TECHNOLOGY OWNED BY CB&I AND DEEMED TO BE COMMERCIALLY SENSITIVE. IT IS TO BE USED ONLY IN CONNECTION WITH WORK BEING PERFORMED BY CB&I. REPRODUCTION IN WHOLE OR IN PART FOR ANY PURPOSE OTHER THAN WORK PERFORMED BY CB&I IS FORBIDDEN EXCEPT BY EXPRESS WRITTEN PERMISSION OF CB&I. IT IS TO BE SAFEGUARDED AGAINST BOTH DELIBERATE AND INADVERTENT DISCLOSURE TO ANY THIRD PARTY.

DRAWN: EGA | CK'D: SES | APPD: BAH | DATE: 03/30/15 | SCALE: NONE

PROCESS LEAD SHEET
INST. SYMBOLS, LEGENDS & ABBREVIATIONS
PHASE IV MID-PLUME PUMP & TREAT SYSTEM

FOR: BULK FUELS FACILITY, KIRTLAND AFB, NM

PROJECT NO: 140705 | DWG NO: 140705-001-PR-03-400013 | REV: 1

Form: CM5-830-00-FM-02104 CBI ANSI D.dwg

File: 140705-001-PR-03-400013.dwg
Plot Date/Time: Mar 21, 2016 – 2:23pm
Plotted By: charles.bentley

THIS PAGE INTENTIONALLY LEFT BLANK

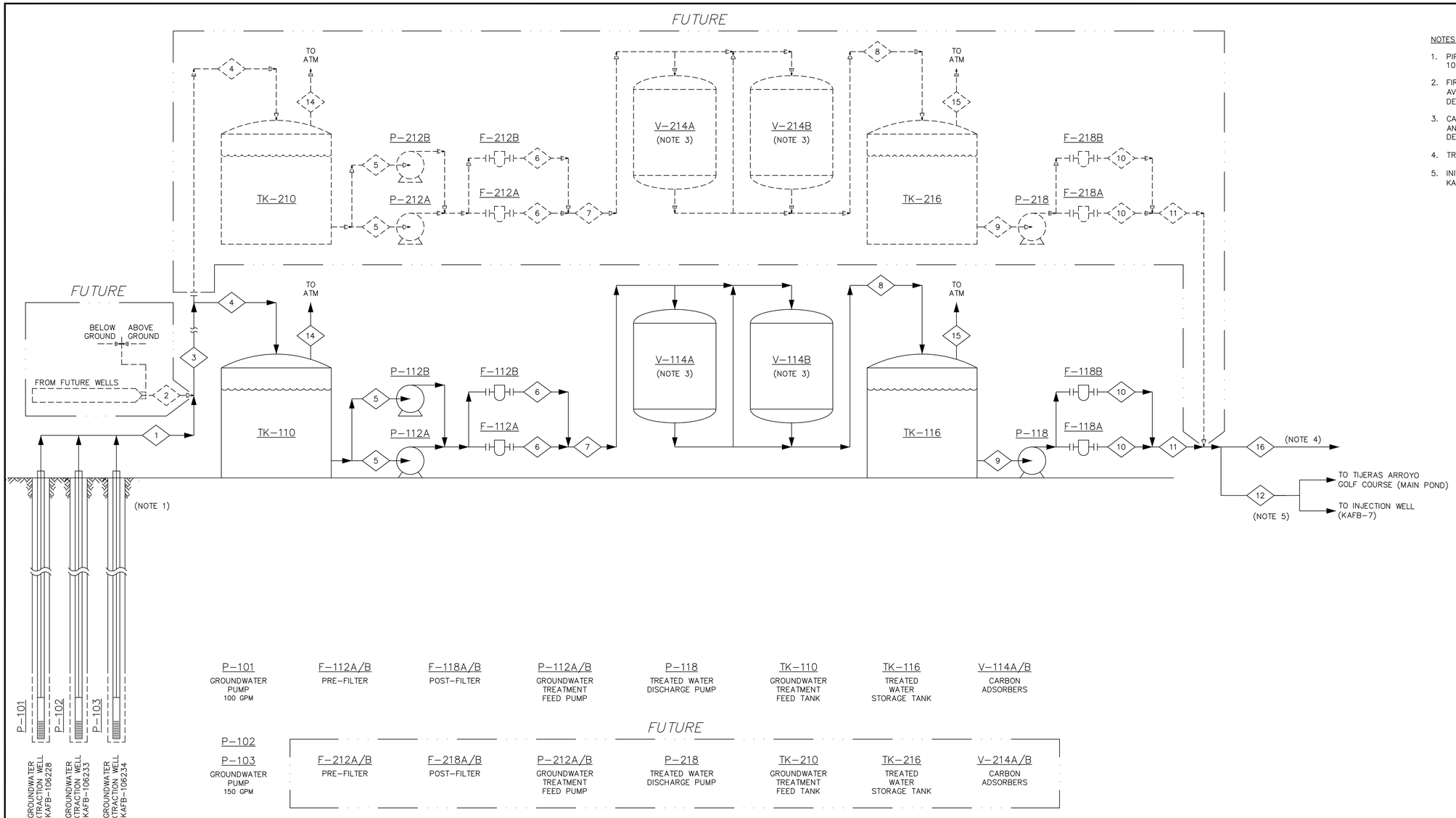

NOTES:

1. PIPELINE FROM GROUNDWATER WELL KAFB-106228, KAFB-106233 AND KAFB 106234 IS DOUBLE-WALLED HDPE PIPE.
2. FIRST 3 WELLS ARE EXPECTED TO PRODUCE 400 GPM OF GROUND WATER. AVERAGE EDB CONCENTRATION IS EXPECTED TO BE BETWEEN 0.05 AND 0.5 UG/L. DESIGN INLET EDB TO CARBON BEDS IS 2.0 UG/L.
3. CARBON VESSELS ARE RUN IN SERIES WITH OPTIONAL VALVING FOR PARALLEL AND LEAD/LAG CONFIGURATION. SEE DRAWING PR-03-400003 FOR VALVING DETAIL.
4. TREATED WATER CONNECTION FOR DUST CONTROL. (INTERMITTENT)
5. INITIALLY TREATED GW (UP TO 400 GPM) WILL GO TO GOLF COURSE AND/OR THE KAFB-7, (INJECTION WELL).

STREAM NO. / COMPONENT		1 WELLS TO GWTS	2 FUTURE WELLS TO GWTS	3 WELL FIELD TO GWTS	4 INFLUENT TO FEED TANK	5 GWTS FEED PUMPS	6 PRE-FILTER	7 CARBON ABSORPTION INLET	8 TREATED WATER	9 DISCHARGE PUMP	10 POST-FILTER	11 TREATED DISCHARGE	12 TREATED DISCHARGE	13 INFILTRATION GALLERY	14 GROUNDWATER TREATMENT FEED TANK VENT	15 TREATED WATER STORAGE TANK VENT	16 TREATED WATER TO DUST CONTROL CONNECTION		
LIQUID FLOW (DESIGN)	gpm	400	400	800	400	200	200	400	400	400	200	400	400				100 (NOTE 4)		
LIQUID FLOW (average)	gpm	400 (NOTE 2)																	
AIR FLOW	acfm (scfm)																		
ETHYLENE DIBROMIDE (EDB)	µg/L	2	2	2	2	2	2	2	0.03	0.03	0.03	0.03	0.03						
PRESSURE	psig (psia)	25	25	25	25	5	25	25	25	5	25	25	25		(12.05)	(12.05)			
TEMPERATURE	°F	58	58	58	58	58	58	58	58	58	58	58	58		68	68			
DENSITY (AT 70°F)	lb/ft³	62.4	62.4	62.4	62.4	62.4	62.4	62.4	62.4	62.4	62.4	62.4	62.4		0.061	0.061			

THIS ASBUILT (RECORD DRAWING) HAS BEEN PREPARED, IN PART, BASED UPON INFORMATION FURNISHED BY OTHERS. WHILE THIS INFORMATION IS BELIEVED TO BE RELIABLE, CB&I ASSUMES NO RESPONSIBILITY FOR THE ACCURACY OF THIS RECORD DRAWING OR FOR ANY ERRORS OR OMISSIONS THAT MAY HAVE BEEN INCORPORATED INTO IT AS A RESULT OF INCORRECT INFORMATION PROVIDED TO CB&I. THOSE RELYING ON THIS RECORD DOCUMENT ARE ADVISED TO OBTAIN INDEPENDENT VERIFICATION OF ITS ACCURACY.

PROFESSIONAL SEAL

U.S. ARMY CORPS OF ENGINEERS
ALBUQUERQUE DISTRICT
ALBUQUERQUE, NEW MEXICO

CB&I FEDERAL SERVICES LLC
312 DIRECTORS DRIVE
KNOXVILLE, TENNESSEE 37923
865-690-3211

CLIENT DWG NO:

NOTES

NO.	REVISION	DRAWN	CK'D	APPD	DATE
1	RECORD DRAWING	RJT	SES	BAH	03/25/16
0	ISSUED FOR CONSTRUCTION	EGA	SES	BAH	03/30/15

REFERENCE DRAWINGS

THIS DOCUMENT IS THE PROPERTY OF CHICAGO BRIDGE & IRON COMPANY ("CB&I"). IT MAY CONTAIN INFORMATION DESCRIBING TECHNOLOGY OWNED BY CB&I AND DEEMED TO BE COMMERCIALLY SENSITIVE. IT IS TO BE USED ONLY IN CONNECTION WITH WORK BEING PERFORMED BY CB&I. REPRODUCTION IN WHOLE OR IN PART FOR ANY PURPOSE OTHER THAN WORK PERFORMED BY CB&I IS FORBIDDEN EXCEPT BY EXPRESS WRITTEN PERMISSION OF CB&I. IT IS TO BE SAFEGUARDED AGAINST BOTH DELIBERATE AND INADVERTENT DISCLOSURE TO ANY THIRD PARTY.

DRAWN: EGA | CK'D: SES | APPD: BAH | DATE: 03/30/15 | SCALE: NONE

PROCESS FLOW DIAGRAM
MID-PLUME PUMP & TREAT SYSTEM

FOR: BULK FUELS FACILITY, KIRTLAND AFB, NM

PROJECT NO: 140705 | DWG NO: 140705-001-PR-01-400001 | REV: 1

Form: CMS-830-00-FM-02104 CB ANSI D.dwg

File: 140705-001-PR-01-400001.dwg
Plot Date/Time: Mar 23, 2016 - 8:56am
Plotted By: charles.bentley

THIS PAGE INTENTIONALLY LEFT BLANK

NOTES:

1. DOUBLE-WALLED PIPE WILL PENETRATE BUILDING FLOOR.
2. LEVEL TRANSDUCER TO MONITOR WATER LEVEL.
3. INTERSTITIAL LEAK DETECTION.
4. VAULT LEAK DETECTION.
5. INSTALLED AND CAPPED BELOW GRADE DURING PHASE IV FOR RAPID WELLS.
6. TWO CHECK VALVES INSTALLED ON 3" DIA. DROP PIPE TO PUMP. CHECK VALVES ARE LOCATED AT PUMP DISCHARGE AND 250 FEET ABOVE DISCHARGE.

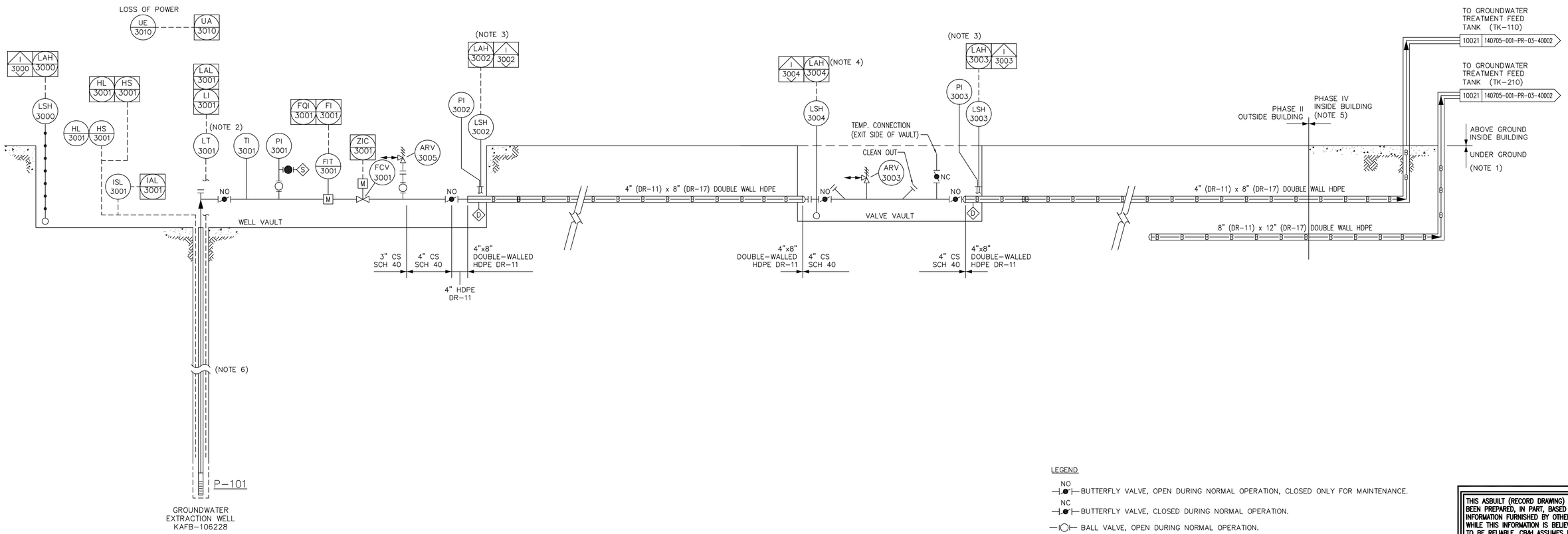

P-101

WELL PUMP
30 HP
100 GPM
600 FT TDH

LEGEND

NO — BUTTERFLY VALVE, OPEN DURING NORMAL OPERATION, CLOSED ONLY FOR MAINTENANCE.

NC — BUTTERFLY VALVE, CLOSED DURING NORMAL OPERATION.

BALL VALVE, OPEN DURING NORMAL OPERATION.

BALL VALVE, CLOSED DURING NORMAL OPERATION.

THIS ASBUILT (RECORD DRAWING) HAS BEEN PREPARED, IN PART, BASED UPON INFORMATION FURNISHED BY OTHERS. WHILE THIS INFORMATION IS BELIEVED TO BE RELIABLE, CB&I ASSUMES NO RESPONSIBILITY FOR THE ACCURACY OF THIS RECORD DRAWING OR FOR ANY ERRORS OR OMISSIONS THAT MAY HAVE BEEN INCORPORATED INTO IT AS A RESULT OF INCORRECT INFORMATION PROVIDED TO CB&I. THOSE RELYING ON THIS RECORD DOCUMENT ARE ADVISED TO OBTAIN INDEPENDENT VERIFICATION OF ITS ACCURACY.

PROFESSIONAL SEAL

U.S. ARMY CORPS OF ENGINEERS
ALBUQUERQUE DISTRICT
ALBUQUERQUE, NEW MEXICO

CB&I FEDERAL SERVICES LLC
312 DIRECTORS DRIVE
KNOXVILLE, TENNESSEE 37923
865-690-3211

CLIENT DWG NO:

NOTES

REFERENCE DRAWINGS	NO.	REVISION	DRAWN	CK'D	APPD	DATE
	1	RECORD DRAWING	CFB	SES	BAH	03/25/16
	0	ISSUED FOR CONSTRUCTION	EGA	SES	BAH	03/30/15

THIS DOCUMENT IS THE PROPERTY OF CHICAGO BRIDGE & IRON COMPANY ("CB&I"). IT MAY CONTAIN INFORMATION DESCRIBING TECHNOLOGY OWNED BY CB&I AND DEEMED TO BE COMMERCIALLY SENSITIVE. IT IS TO BE USED ONLY IN CONNECTION WITH WORK BEING PERFORMED BY CB&I. REPRODUCTION IN WHOLE OR IN PART FOR ANY PURPOSE OTHER THAN WORK PERFORMED BY CB&I IS FORBIDDEN EXCEPT BY EXPRESS WRITTEN PERMISSION OF CB&I. IT IS TO BE SAFEGUARDED AGAINST BOTH DELIBERATE AND INADVERTENT DISCLOSURE TO ANY THIRD PARTY.

DRAWN: EGA | CK'D: SES | APPD: BAH | DATE: 03/30/15 | SCALE: NONE

PIPING & INSTRUMENTATION DIAGRAM
EXTRACTION WELL KAFB-106228
MID-PLUME PUMP & TREAT SYSTEM

FOR: BULK FUELS FACILITY, KIRTLAND AFB, NM

PROJECT NO: 140705 | DWG NO: 140705-001-PR-03-400001 | REV: 1

File: 140705-001-PR-03-400001.dwg
Plot Date/Time: Mar 23, 2016 - 9:08am
Plotted By: charles.bentley

Form: CMS-830-00-FM-02104 CB ANSI D.dwg

THIS PAGE INTENTIONALLY LEFT BLANK

NOTES:

1. CAPPED WITH BLIND FLANGE FOR FUTURE USE.
2. START-UP CONE STRAINER, SEE MECHANICAL DRAWINGS FOR DETAILS.
3. SIC-3102 A/B CAN BE CONTROLLED BY LEVEL IN TK-110 (LIC-3101) OR CAN BE SET BY FLOW CONTROL SET POINT ON FIC - 3102

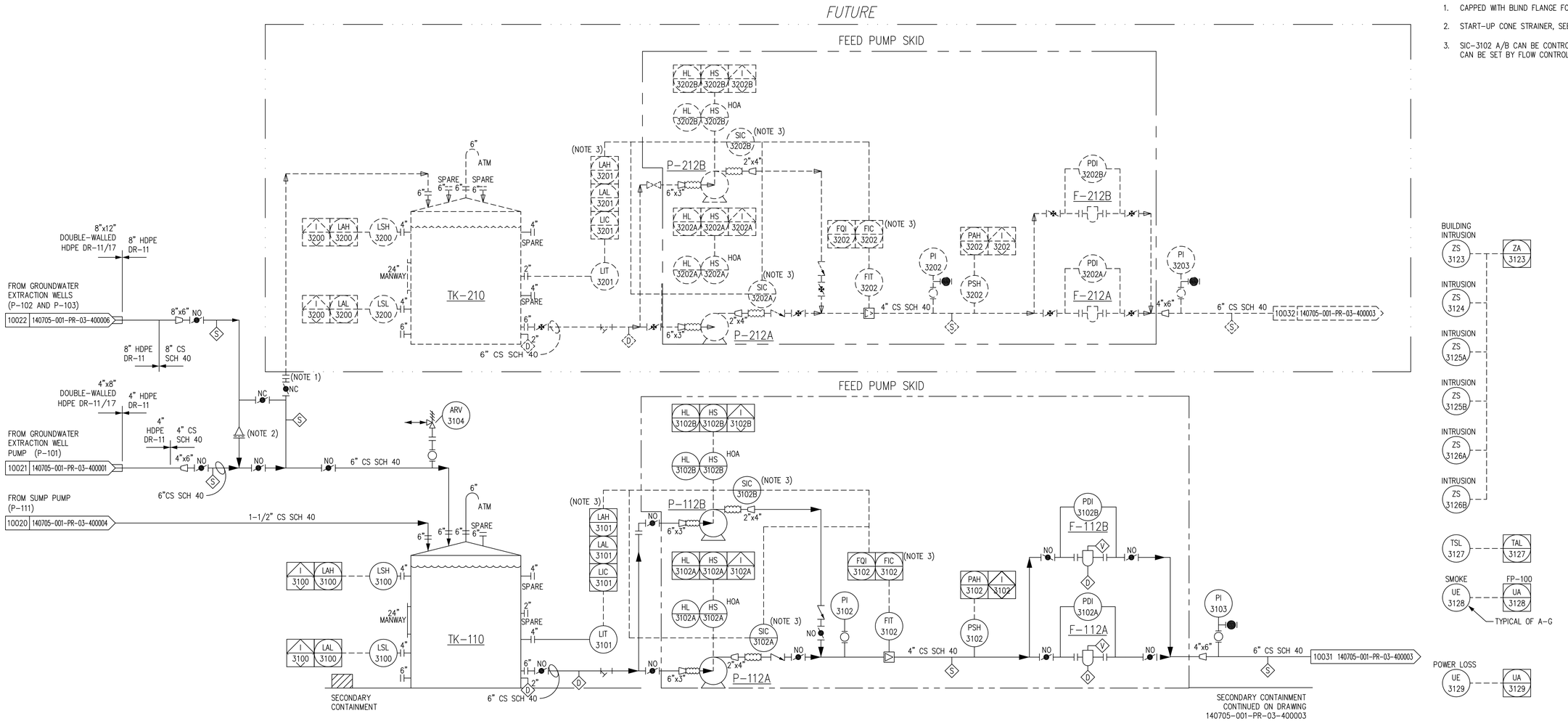

FUTURE

F-112A/B	P-112A/B	TK-110	F-212A/B	P-212A/B	TK-210
PRE-FILTER	GROUNDWATER TREATMENT FEED PUMP 15 HP 200 GPM 100 FT TDH	GROUNDWATER TREATMENT FEED TANK 10' DIA. 12' H. 6,000 GALLONS	PRE-FILTER	GROUNDWATER TREATMENT FEED PUMP 15 HP 200 GPM 100 FT TDH	GROUNDWATER TREATMENT FEED TANK 10' DIA. 12' H. 6,000 GALLONS

LEGEND

- NO — BUTTERFLY VALVE, OPEN DURING NORMAL OPERATION, CLOSED ONLY FOR MAINTENANCE.
- NC — BUTTERFLY VALVE, CLOSED DURING NORMAL OPERATION.
- BALL VALVE, OPEN DURING NORMAL OPERATION.
- BALL VALVE, CLOSED DURING NORMAL OPERATION.
- V — VENT
- D — DRAIN

THIS ASBUILT (RECORD DRAWING) HAS BEEN PREPARED, IN PART, BASED UPON INFORMATION FURNISHED BY OTHERS. WHILE THIS INFORMATION IS BELIEVED TO BE RELIABLE, CB&I ASSUMES NO RESPONSIBILITY FOR THE ACCURACY OF THIS RECORD DRAWING OR FOR ANY ERRORS OR OMISSIONS THAT MAY HAVE BEEN INCORPORATED INTO IT AS A RESULT OF INCORRECT INFORMATION PROVIDED TO CB&I. THOSE RELYING ON THIS RECORD DOCUMENT ARE ADVISED TO OBTAIN INDEPENDENT VERIFICATION OF ITS ACCURACY.

PROFESSIONAL SEAL

U.S. ARMY CORPS OF ENGINEERS
ALBUQUERQUE DISTRICT
ALBUQUERQUE, NEW MEXICO

CB&I FEDERAL SERVICES LLC
312 DIRECTORS DRIVE
KNOXVILLE, TENNESSEE 37923
865-690-3211

CLIENT DWG NO:

NOTES

REFERENCE DRAWINGS	NO.	REVISION	DRAWN	CK'D	APPD	DATE
	1	RECORD DRAWING	RJT	SES	BAH	03/25/16
	0	ISSUED FOR CONSTRUCTION	ECA	SES	BAH	03/30/15

THIS DOCUMENT IS THE PROPERTY OF CHICAGO BRIDGE & IRON COMPANY ("CB&I"). IT MAY CONTAIN INFORMATION DESCRIBING TECHNOLOGY OWNED BY CB&I AND DEEMED TO BE COMMERCIALLY SENSITIVE. IT IS TO BE USED ONLY IN CONNECTION WITH WORK BEING PERFORMED BY CB&I. REPRODUCTION IN WHOLE OR IN PART FOR ANY PURPOSE OTHER THAN WORK PERFORMED BY CB&I IS FORBIDDEN EXCEPT BY EXPRESS WRITTEN PERMISSION OF CB&I. IT IS TO BE SAFEGUARDED AGAINST BOTH DELIBERATE AND INADVERTENT DISCLOSURE TO ANY THIRD PARTY.

DRAWN: EGA | CK'D: SES | APPD: BAH | DATE: 03/30/15 | SCALE:

PIPING & INSTRUMENT DIAGRAM
GROUNDWATER TREATMENT SYSTEM
MID-PLUME PUMP & TREAT SYSTEM

FOR: BULK FUELS FACILITY, KIRTLAND AFB, NM

PROJECT NO: 140705 | DWG NO: 140705-001-PR-03-400002 | REV: 1

Form: CMS-830-00-FM-02104 CB ANSI D.dwg

File: 140705-001-PR-03-400002.dwg
Plot Date/Time: Mar 23, 2016 - 9:06am
Plotted By: charles.bentley

THIS PAGE INTENTIONALLY LEFT BLANK

NOTES:

1. WALL MOUNTED UTILITY STATION.
2. VALVE INCLUDES INTEGRAL BACK FLOW PREVENTION CAPABILITY
3. VALVE POSITIONS SET ACCORDING TO TABLES

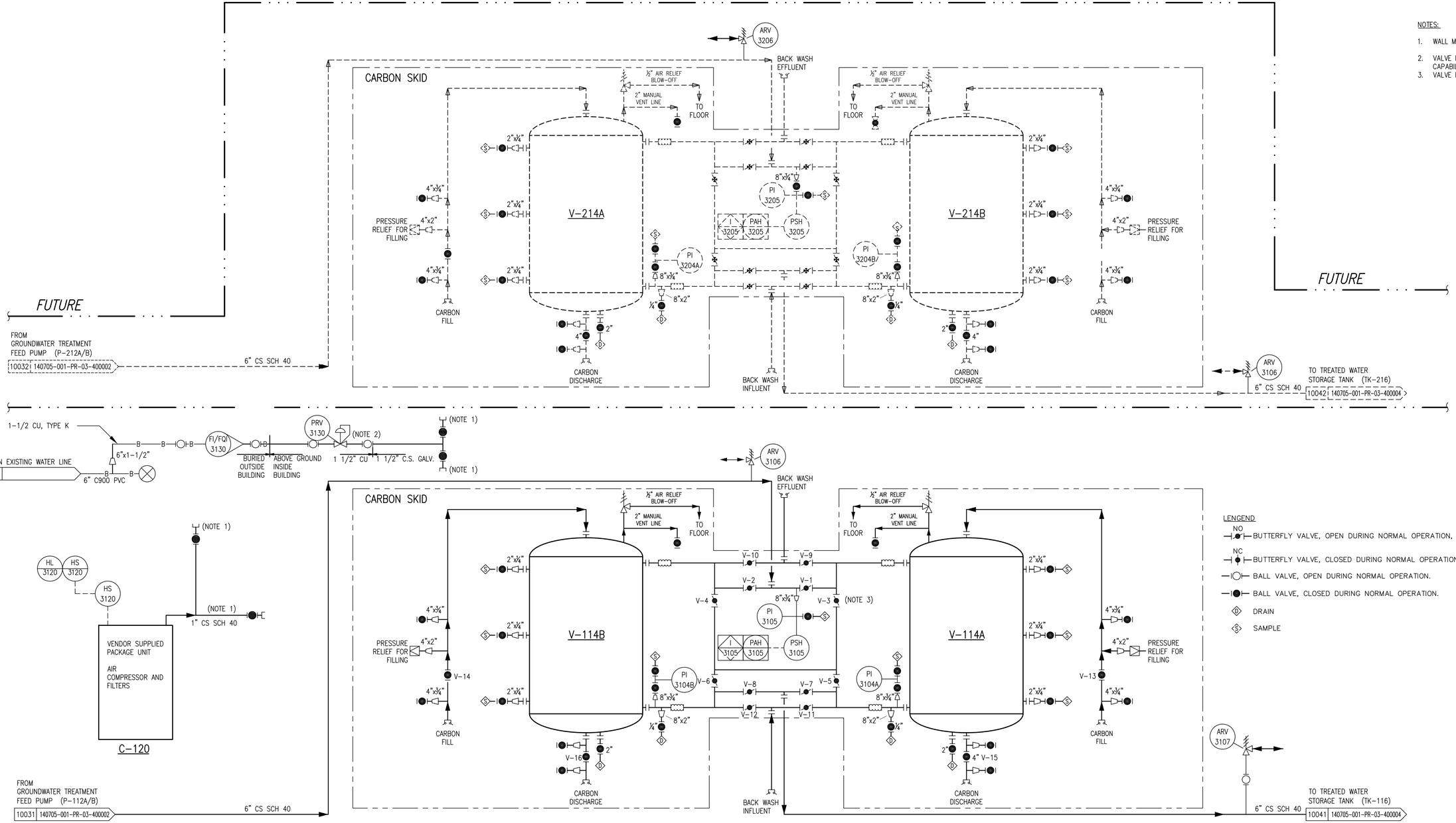

LENGEND

- NO — BUTTERFLY VALVE, OPEN DURING NORMAL OPERATION, CLOSED ONLY FOR MAINTENANCE.
- NC — BUTTERFLY VALVE, CLOSED DURING NORMAL OPERATION.
- BALL VALVE, OPEN DURING NORMAL OPERATION.
- BALL VALVE, CLOSED DURING NORMAL OPERATION.
- DRAIN
- SAMPLE

C-120
PACKAGE AIR COMPRESSOR SYSTEM
107 SCFM
115 PSIG

V-114A/B
CARBON ADSORBERS
40,000 LBS.

V-214A/B
CARBON ADSORBERS
40,000 LBS.

FUTURE

THIS ASBUILT (RECORD DRAWING) HAS BEEN PREPARED, IN PART, BASED UPON INFORMATION FURNISHED BY OTHERS. WHILE THIS INFORMATION IS BELIEVED TO BE RELIABLE, CB&I ASSUMES NO RESPONSIBILITY FOR THE ACCURACY OF THIS RECORD DRAWING OR FOR ANY ERRORS OR OMISSIONS THAT MAY HAVE BEEN INCORPORATED INTO IT AS A RESULT OF INCORRECT INFORMATION PROVIDED TO CB&I. THOSE RELYING ON THIS RECORD DOCUMENT ARE ADVISED TO OBTAIN INDEPENDENT VERIFICATION OF ITS ACCURACY.

PROFESSIONAL SEAL

U.S. ARMY CORPS OF ENGINEERS
ALBUQUERQUE DISTRICT
ALBUQUERQUE, NEW MEXICO

CB&I FEDERAL SERVICES LLC
312 DIRECTORS DRIVE
KNOXVILLE, TENNESSEE 37923
865-690-3211

CLIENT DWG NO:

NOTES

REFERENCE DRAWINGS	NO.	REVISION	DRAWN	CK'D	APPD	DATE
	1	RECORD DRAWING	RJT	SES	BAH	03/25/16
	0	ISSUED FOR CONSTRUCTION	EGA	SES	BAH	03/30/15

THIS DOCUMENT IS THE PROPERTY OF CHICAGO BRIDGE & IRON COMPANY ("CB&I"). IT MAY CONTAIN INFORMATION DESCRIBING TECHNOLOGY OWNED BY CB&I AND DEEMED TO BE COMMERCIALLY SENSITIVE. IT IS TO BE USED ONLY IN CONNECTION WITH WORK BEING PERFORMED BY CB&I. REPRODUCTION IN WHOLE OR IN PART FOR ANY PURPOSE OTHER THAN WORK PERFORMED BY CB&I IS FORBIDDEN EXCEPT BY EXPRESS WRITTEN PERMISSION OF CB&I. IT IS TO BE SAFEGUARDED AGAINST BOTH DELIBERATE AND INADVERTENT DISCLOSURE TO ANY THIRD PARTY.

DRAWN: EGA | CK'D: SES | APPD: BAH | DATE: 03/30/15 | SCALE: NONE

PIPING & INSTRUMENTATION DIAGRAM
GROUNDWATER TREATMENT SYSTEM
MID-PLUME PUMP & TREAT SYSTEM

FOR: BULK FUELS FACILITY, KIRTLAND AFB, NM

PROJECT NO: 140705 | DWG NO: 140705-001-PR-03-400003 | REV: 1

Form: CMS-830-00-FM-02104 CBI ANSI D.dwg

File: 140705-001-PR-03-400003.dwg
Plot Date/Time: Mar 21, 2016 - 3:18pm
Plotted By: charles.bentley

THIS PAGE INTENTIONALLY LEFT BLANK

NOTES:

1. CAPPED WITH BLIND FLANGE FOR FUTURE USE.
2. SIC-3108 CAN BE CONTROLLED BY LEVEL IN TK-116 OR CAN BE SET BY FLOW CONTROL SET POINT ON FIC-3108.

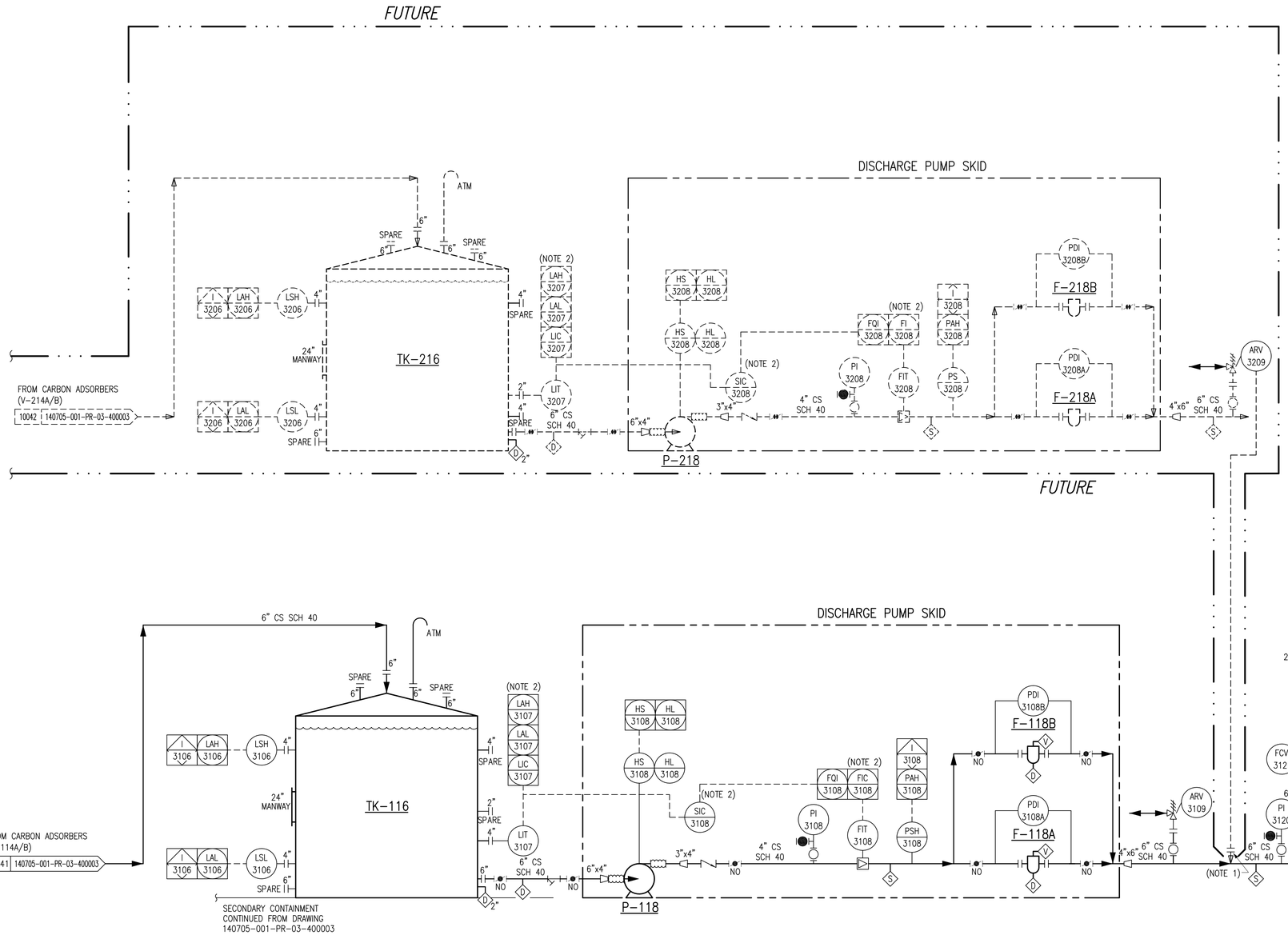

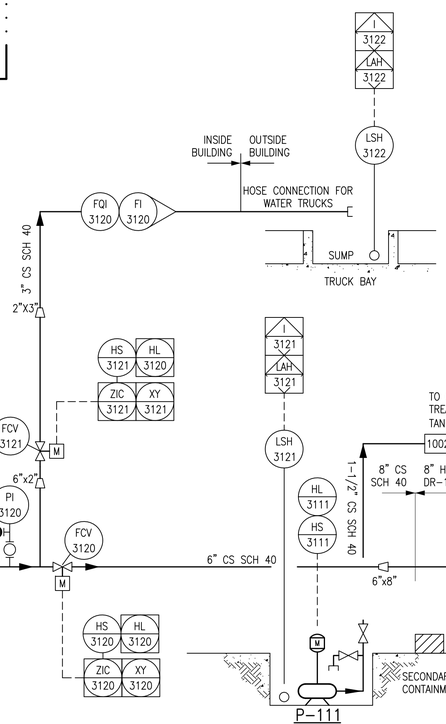

LEGEND

- NO — BUTTERFLY VALVE, OPEN DURING NORMAL OPERATION, CLOSED ONLY FOR MAINTENANCE.
- NC — BUTTERFLY VALVE, CLOSED DURING NORMAL OPERATION.
- BALL VALVE, OPEN DURING NORMAL OPERATION.
- BALL VALVE, CLOSED DURING NORMAL OPERATION.

THIS ASBUILT (RECORD DRAWING) HAS BEEN PREPARED, IN PART, BASED UPON INFORMATION FURNISHED BY OTHERS. WHILE THIS INFORMATION IS BELIEVED TO BE RELIABLE, CB&I ASSUMES NO RESPONSIBILITY FOR THE ACCURACY OF THIS RECORD DRAWING OR FOR ANY ERRORS OR OMISSIONS THAT MAY HAVE BEEN INCORPORATED INTO IT AS A RESULT OF INCORRECT INFORMATION PROVIDED TO CB&I. THOSE RELYING ON THIS RECORD DOCUMENT ARE ADVISED TO OBTAIN INDEPENDENT VERIFICATION OF ITS ACCURACY.

PROFESSIONAL SEAL

F-118A/B	P-118	P-111	TK-116	F-218A/B	P-218	TK-216
POST-FILTER	TREATED WATER DISCHARGE PUMP 40 HP 400 GPM 180 FT TDH	SUMP PUMP 1/3 HP 5 GPM 20 FT TDH	TREATED WATER STORAGE 10' DIA. 12' H 6,000 GALLONS	POST-FILTER	TREATED WATER DISCHARGE PUMP 40 HP 400 GPM 180 FT TDH	TREATED WATER STORAGE 10' DIA. 12' H 6,000 GALLONS

FUTURE

LEGEND

- NO — BUTTERFLY VALVE, OPEN DURING NORMAL OPERATION, CLOSED ONLY FOR MAINTENANCE.
- NC — BUTTERFLY VALVE, CLOSED DURING NORMAL OPERATION.
- BALL VALVE, OPEN DURING NORMAL OPERATION.
- BALL VALVE, CLOSED DURING NORMAL OPERATION.
- GATE VALVE, NORMALLY OPEN.

U.S. ARMY CORPS OF ENGINEERS
ALBUQUERQUE DISTRICT
ALBUQUERQUE, NEW MEXICO

CB&I FEDERAL SERVICES LLC
312 DIRECTORS DRIVE
KNOXVILLE, TENNESSEE 37923
865-690-3211

CLIENT DWG NO:

NOTES

REFERENCE DRAWINGS	NO.	REVISION	DRAWN	CK'D	APPD	DATE
	1	RECORD DRAWING	RJT	SES	BAH	03/25/16
	0	ISSUED FOR CONSTRUCTION	EGA	SES	BAH	03/30/15

THIS DOCUMENT IS THE PROPERTY OF CHICAGO BRIDGE & IRON COMPANY ("CB&I"). IT MAY CONTAIN INFORMATION DESCRIBING TECHNOLOGY OWNED BY CB&I AND DEEMED TO BE COMMERCIALLY SENSITIVE. IT IS TO BE USED ONLY IN CONNECTION WITH WORK BEING PERFORMED BY CB&I. REPRODUCTION IN WHOLE OR IN PART FOR ANY PURPOSE OTHER THAN WORK PERFORMED BY CB&I IS FORBIDDEN EXCEPT BY EXPRESS WRITTEN PERMISSION OF CB&I. IT IS TO BE SAFEGUARDED AGAINST BOTH DELIBERATE AND INADVERTENT DISCLOSURE TO ANY THIRD PARTY.

DRAWN: EGA | CK'D: SES | APPD: BAH | DATE: 03/30/15 | SCALE: NONE

PIPING & INSTRUMENTATION DIAGRAM
GROUNDWATER TREATMENT SYSTEM
MID-PLUME PUMP & TREAT SYSTEM

FOR: BULK FUELS FACILITY, KIRTLAND AFB, NM

PROJECT NO: 140705 | DWG NO: 140705-001-PR-03-400004 | REV: 1

File: 140705-001-PR-03-400004.dwg
Plot Date/Time: Mar 23, 2016 - 9:41am
Plotted By: charles.bentley

Form: CMS-830-00-FM-02104 CB ANSI D.dwg

THIS PAGE INTENTIONALLY LEFT BLANK

NOTES:

1. NEW 12" HDPE TREATED WATER PIPELINE FROM GWTS WILL CONNECT TO EXISTING KAFB-7 TO GOLF COURSE PIPELINE. CONNECTION WILL UTILIZE EXISTING TAP INSTALLED FOR TTS.
2. MANUAL DIRECT-BURY PIV VALVES WILL BE INSTALLED ON EITHER SIDE OF TAP AND USED TO SEND WATER TO EITHER GOLF COURSE MAIN POND OR KAFB-7.
3. EXISTING CHECK VALVE AND FLOW METER IN KAFB-7 VALVE VAULT WILL BE REVERSED TO ALLOW FOR WATER INJECTION.
4. SIGNALS TO AND FROM GOLF COURSE MAIN POND AND KAFB-7 CONTROL HOUSE ARE TRANSMITTED TO THE GWTS BUILDING BY TELEMETRY.

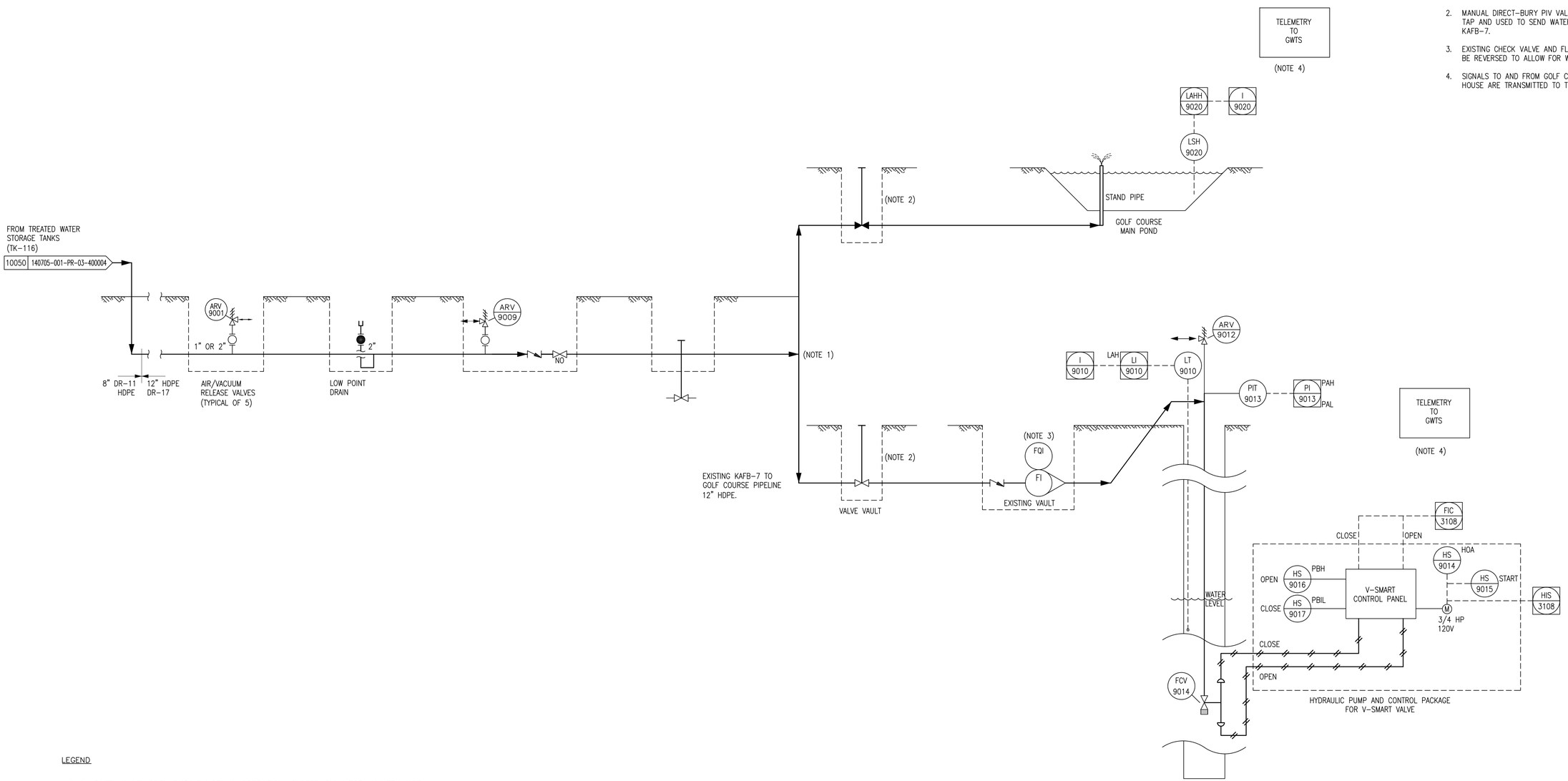

KAFB-7
INJECTION WELL

LEGEND

- GATE VALVE, OPEN DURING NORMAL OPERATION, CLOSED ONLY FOR MAINTENANCE.
- GATE VALVE, CLOSED DURING NORMAL OPERATION.
- BALL VALVE, OPEN DURING NORMAL OPERATION.
- BALL VALVE, CLOSED DURING NORMAL OPERATION.

PROFESSIONAL SEAL

U.S. ARMY CORPS OF ENGINEERS
ALBUQUERQUE DISTRICT
ALBUQUERQUE, NEW MEXICO

CB&I FEDERAL SERVICES LLC
312 DIRECTORS DRIVE
KNOXVILLE, TENNESSEE 37923
865-690-3211

CLIENT DWG NO:

NOTES

REFERENCE DRAWINGS	NO.	REVISION	DRAWN	CK'D	APPD	DATE
	0	ISSUED FOR O&M MANUAL	RJT	SES	SES	03/31/16

THIS DOCUMENT IS THE PROPERTY OF CHICAGO BRIDGE & IRON COMPANY ("CB&I"). IT MAY CONTAIN INFORMATION DESCRIBING TECHNOLOGY OWNED BY CB&I AND DEEMED TO BE COMMERCIALLY SENSITIVE. IT IS TO BE USED ONLY IN CONNECTION WITH WORK BEING PERFORMED BY CB&I. REPRODUCTION IN WHOLE OR IN PART FOR ANY PURPOSE OTHER THAN WORK PERFORMED BY CB&I IS FORBIDDEN EXCEPT BY EXPRESS WRITTEN PERMISSION OF CB&I. IT IS TO BE SAFEGUARDED AGAINST BOTH DELIBERATE AND INADVERTENT DISCLOSURE TO ANY THIRD PARTY.

DRAWN: RJT | CK'D: SES | APPD: SES | DATE: 03/31/16 | SCALE: NONE

PIPING & INSTRUMENTATION DIAGRAM
GOLF COURSE AND KAFB-7 INJECTION
MID-PLUME PUMP & TREAT SYSTEM

FOR: BULK FUELS FACILITY, KIRTLAND AFB, NM

PROJECT NO: 500433 | DWG NO: 500433-001-PR-03-400005 | REV: 0

Form: CM5-830-00-FM-02104 CB& ANSI D.dwg

File: 500433-001-PR-03-400005.dwg
Plot Date/Time: Mar. 31, 2016 - 10:22am
Plotted By: charles.bentley

THIS PAGE INTENTIONALLY LEFT BLANK

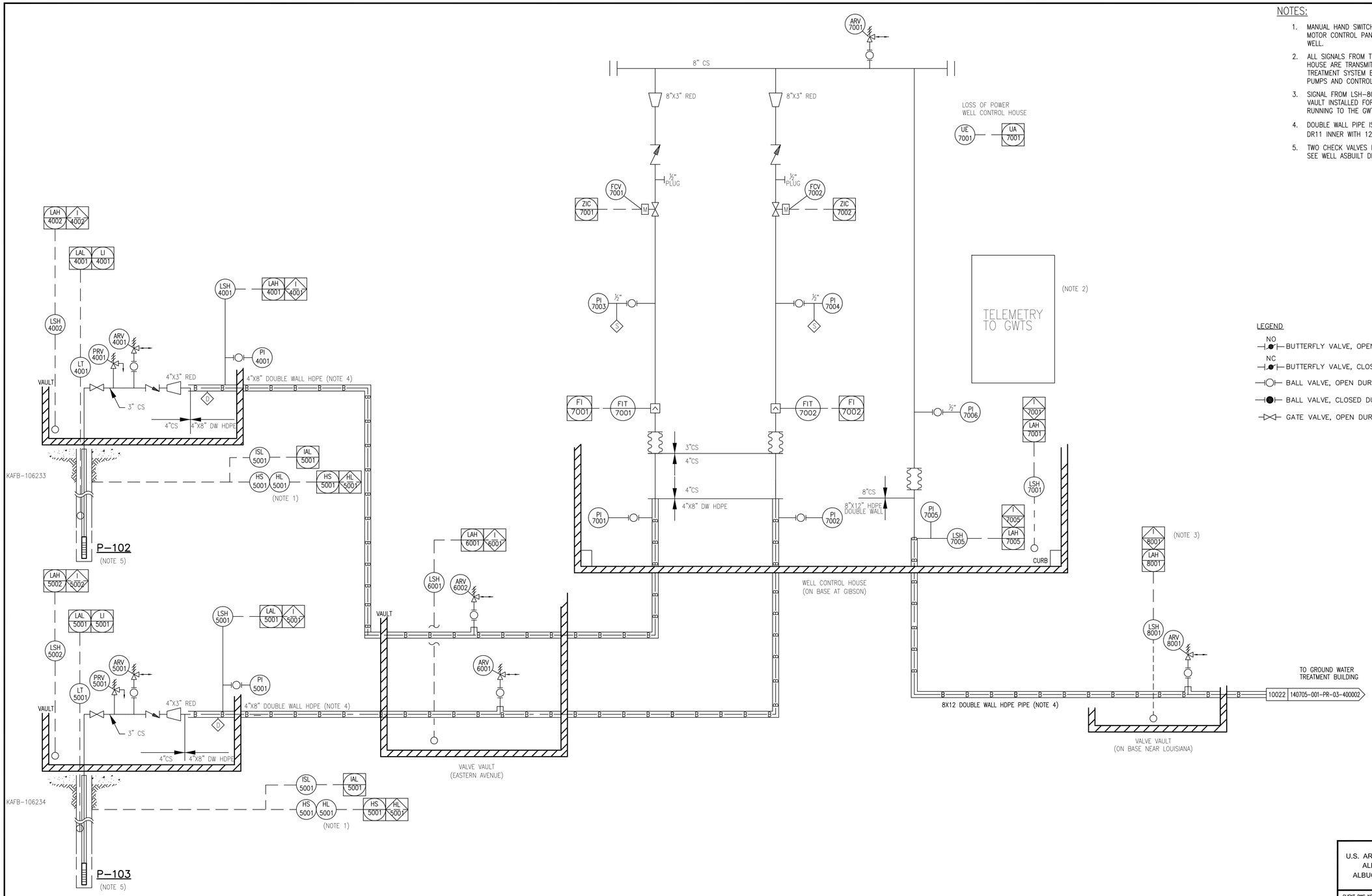

NOTES:

1. MANUAL HAND SWITCHES FOR KAFB-106233 AND 106234 ARE INSTALLED ON MOTOR CONTROL PANEL IN THE WELL CONTROL HOUSE. NO SWITCHES AT THE WELL.
2. ALL SIGNALS FROM THE INSTRUMENTS IN THE WELL VAULTS AND WELL CONTROL HOUSE ARE TRANSMITTED TO THE MAIN CONTROL PANEL IN THE GROUNDWATER TREATMENT SYSTEM BUILDING BY A TELEMETRY SYSTEM. CONTROL SIGNALS TO PUMPS AND CONTROL VALVES ALSO TRANSMITTED BY TELEMETRY.
3. SIGNAL FROM LSH-8001 IS HARD WIRED TO THE JUNCTION BOX IN THE VALVE VAULT INSTALLED FOR KAFB-106228 AND CONNECTED TO EXISTING CABLE RUNNING TO THE GWTS CONTROL PANEL.
4. DOUBLE WALL PIPE IS 4"-DR11 INNER PIPE WITH 8"-DR17 OUTER PIPE OR 8" DR11 INNER WITH 12" DR17 OUTER.
5. TWO CHECK VALVES INSTALLED ON DROP PIPE BETWEEN PUMP AND SURFACE. SEE WELL ASBUILT DIAGRAM FOR DROP PIPE DETAILS.

LEGEND

- NO — BUTTERFLY VALVE, OPEN DURING NORMAL OPERATION.
- NC — BUTTERFLY VALVE, CLOSED DURING NORMAL OPERATION.
- BALL VALVE, OPEN DURING NORMAL OPERATION.
- BALL VALVE, CLOSED DURING NORMAL OPERATION.
- GATE VALVE, OPEN DURING NORMAL OPERATION.

PROFESSIONAL SEAL

U.S. ARMY CORPS OF ENGINEERS
ALBUQUERQUE DISTRICT
ALBUQUERQUE, NEW MEXICO

CB&I FEDERAL SERVICES LLC
312 DIRECTORS DRIVE
KNOXVILLE, TENNESSEE 37923
865-690-3211

CLIENT DWG NO:

NOTES

REFERENCE DRAWINGS	NO.	REVISION	DRAWN	CK'D	APPD	DATE
	0	ISSUED FOR O&M MANUAL	RJT	SES	SES	03/29/16

THIS DOCUMENT IS THE PROPERTY OF CHICAGO BRIDGE & IRON COMPANY ("CB&I"). IT MAY CONTAIN INFORMATION DESCRIBING TECHNOLOGY OWNED BY CB&I AND DEEMED TO BE COMMERCIALLY SENSITIVE. IT IS TO BE USED ONLY IN CONNECTION WITH WORK BEING PERFORMED BY CB&I. REPRODUCTION IN WHOLE OR IN PART FOR ANY PURPOSE OTHER THAN WORK PERFORMED BY CB&I IS FORBIDDEN EXCEPT BY EXPRESS WRITTEN PERMISSION OF CB&I. IT IS TO BE SAFEGUARDED AGAINST BOTH DELIBERATE AND INADVERTENT DISCLOSURE TO ANY THIRD PARTY.

DRAWN: RJT | CK'D: SES | APPD: SES | DATE: 03/29/16 | SCALE: NONE

PIPING AND INSTRUMENTATION DIAGRAM
RAPID EXTRACTION WELLS
MID-PLUME PUMP & TREAT SYSTEM

FOR: BULK FUELS FACILITY, KIRTLAND AFB, NM

PROJECT NO: 500433 | DWG NO: 500433-001-PR-03-400006 | REV: 0

Form: CMS-830-00-FM-02104 CB ANSI D.dwg

File: 500433-001-PR-03-400006.dwg
Plot Date/Time: Mar 29, 2016 - 3:39pm
Plotted By: charles.bentley

THIS PAGE INTENTIONALLY LEFT BLANK

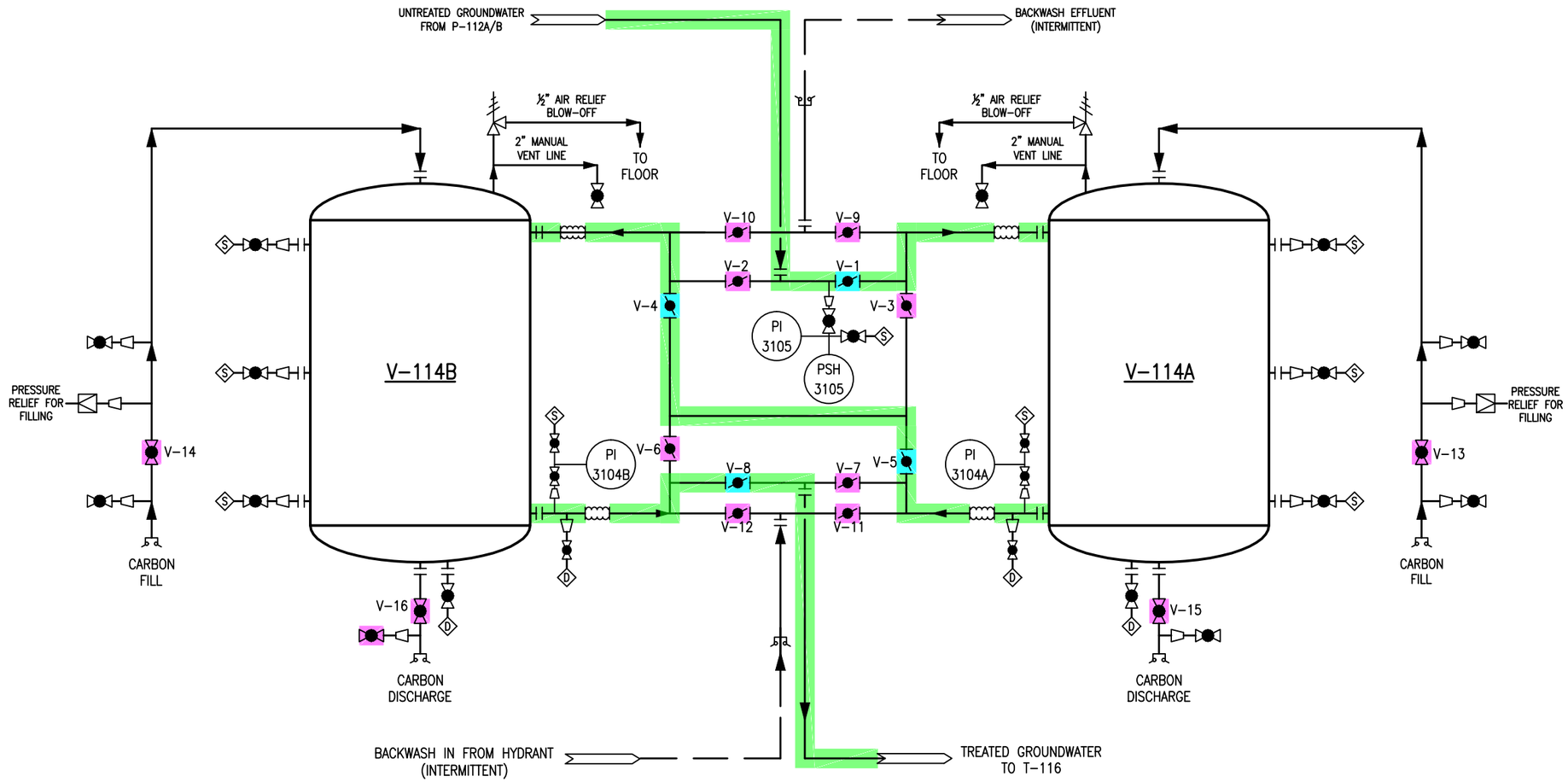

LEGEND

- EXPANSION JOINT
- BALL VALVE
- PS — PRESSURE SWITCH
- REDUCER
- PI — PRESSURE GUAGE
- RUPTURE DISK
- MANUALLY OPERATED BUTTTERFLY VALVE
- QUICK CONNECT CAM LOCK FITTING
- AIR RELIEF VALVE
- S — SAMPLE PORT
- FC — FLUSH CONNECTION
- D — DRAIN CONNECTION

- CLOSED VALVE
- OPEN VALVE
- GROUND WATER FLOW

U.S. ARMY ENGINEER DISTRICT
CORPS OF ENGINEERS
ALBUQUERQUE, NEW MEXICO

CLIENT DWG NO:

CARBON BED VALVE POSITIONS

SERIES OPERATION

A LEAD - B LAG

FOR:

NO.	REVISION	DRAWN	CK'D	APPD	DATE

DRAWN:	CK'D:	APPD:	DATE:	SCALE:	PROJ NO:140705	DWG NO: FIGURE E-1	REV:

THIS PAGE INTENTIONALLY LEFT BLANK

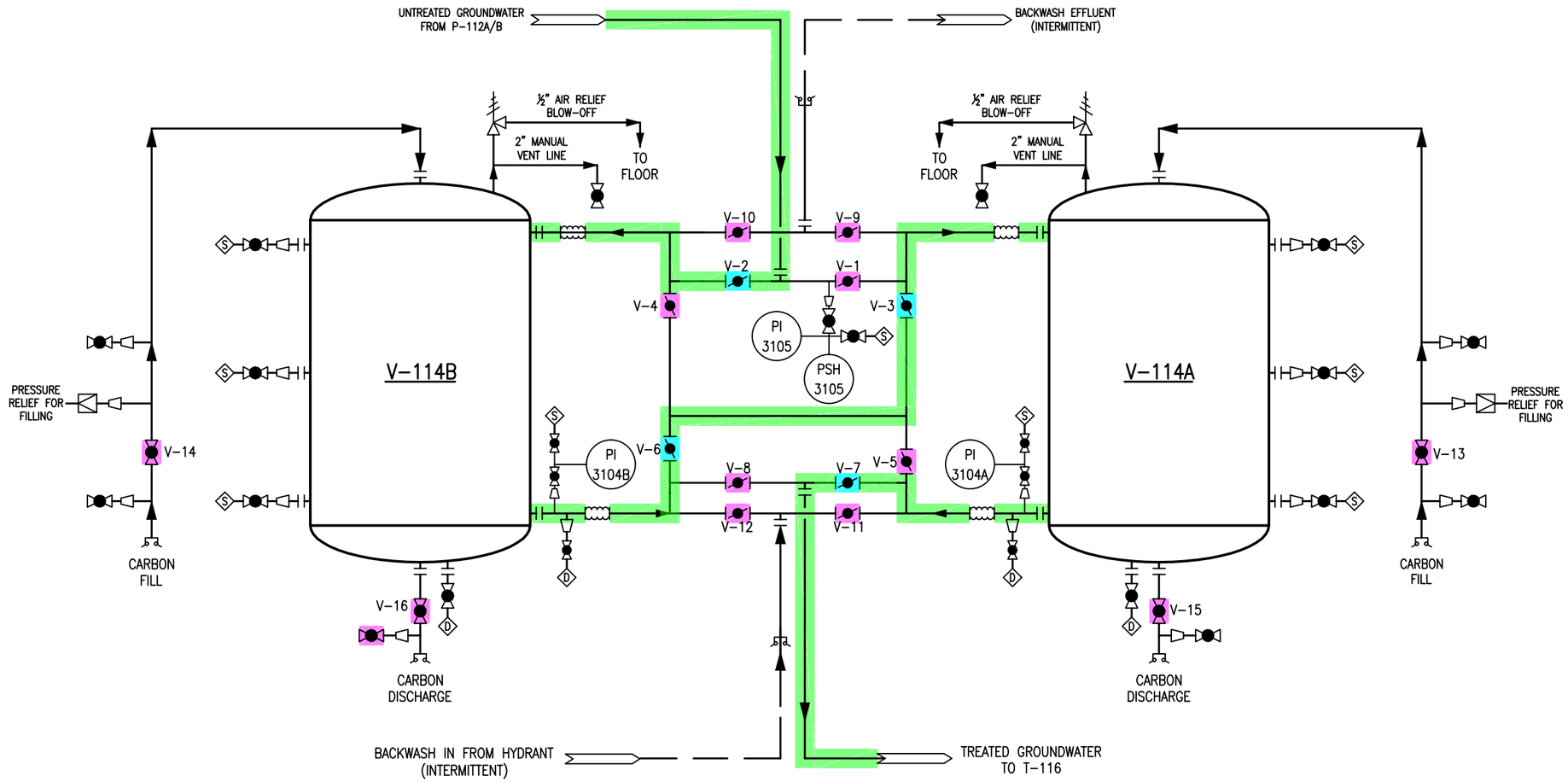

LEGEND

- EXPANSION JOINT
- BALL VALVE
- PRESSURE SWITCH
- REDUCER
- PRESSURE GUAGE
- RUPTURE DISK
- MANUALLY OPERATED BUTTTERFLY VALVE
- QUICK CONNECT CAM LOCK FITTING
- AIR RELIEF VALVE
- S — SAMPLE PORT
- FC — FLUSH CONNECTION
- D — DRAIN CONNECTION

- CLOSED VALVE
- OPEN VALVE
- GROUND WATER FLOW

U.S. ARMY ENGINEER DISTRICT
CORPS OF ENGINEERS
ALBUQUERQUE, NEW MEXICO

CLIENT DWG NO:

CARBON BED VALVE POSITIONS

SERIES OPERATION

B LEAD - A LAG

FOR:

NO.	REVISION	DRAWN	CK'D	APPD	DATE

DRAWN:	CK'D:	APPD:	DATE:	SCALE:	PROJ NO:	DWG NO: FIGURE E-2	REV:

THIS PAGE INTENTIONALLY LEFT BLANK

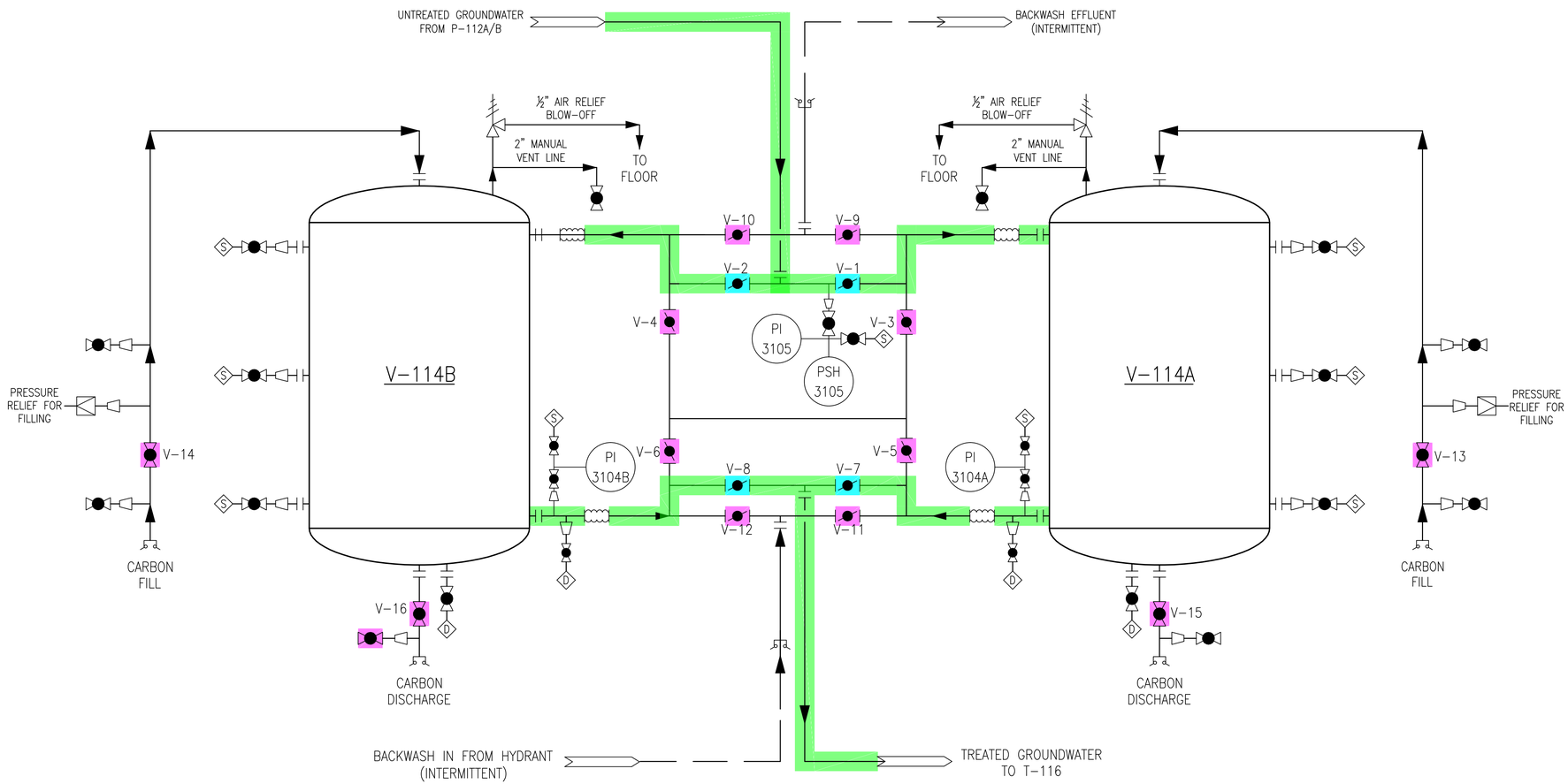

LEGEND

- EXPANSION JOINT
- BALL VALVE
- PRESSURE SWITCH
- REDUCER
- PRESSURE GUAGE
- RUPTURE DISK
- MANUALLY OPERATED BUTTTERFLY VALVE
- QUICK CONNECT CAM LOCK FITTING
- AIR RELIEF VALVE
- S — SAMPLE PORT
- FC — FLUSH CONNECTION
- D — DRAIN CONNECTION

- CLOSED VALVE
- OPEN VALVE
- GROUND WATER FLOW

U.S. ARMY ENGINEER DISTRICT
CORPS OF ENGINEERS
ALBUQUERQUE, NEW MEXICO

CLIENT DWG NO:

CARBON BED VALVE POSITIONS

PARALLEL FLOW

A AND B BOTH ONLINE

FOR:

NO.	REVISION	DRAWN	CK'D	APPD	DATE

DRAWN:	CK'D:	APPD:	DATE:	SCALE:	PROJ NO:	DWG NO: FIGURE E-3	REV:

THIS PAGE INTENTIONALLY LEFT BLANK

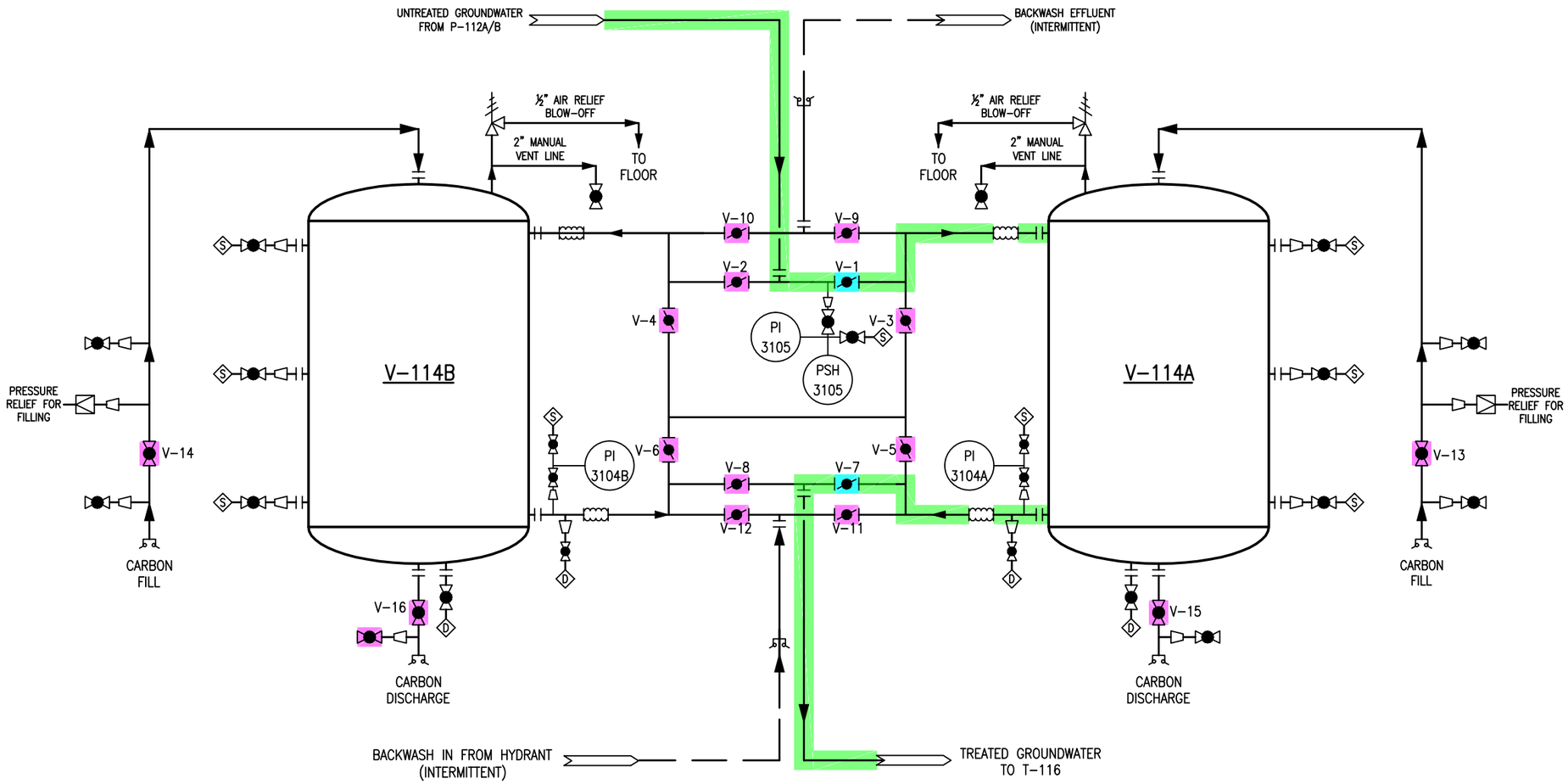

LEGEND

- EXPANSION JOINT
- BALL VALVE
- PRESSURE SWITCH
- REDUCER
- PRESSURE GUAGE
- RUPTURE DISK
- MANUALLY OPERATED BUTTERFLY VALVE
- QUICK CONNECT CAM LOCK FITTING
- AIR RELIEF VALVE
- S — SAMPLE PORT
- FC — FLUSH CONNECTION
- D — DRAIN CONNECTION

- CLOSED VALVE
- OPEN VALVE
- GROUND WATER FLOW

U.S. ARMY ENGINEER DISTRICT
CORPS OF ENGINEERS
ALBUQUERQUE, NEW MEXICO

CLIENT DWG NO:

CARBON BED VALVE POSITIONS

SINGLE BED

A ONLINE B OFFLINE

FOR:

NO.	REVISION	DRAWN	CK'D	APPD	DATE

DRAWN:	CK'D:	APPD:	DATE:	SCALE:	PROJ NO:	DWG NO: FIGURE E-4	REV:

THIS PAGE INTENTIONALLY LEFT BLANK

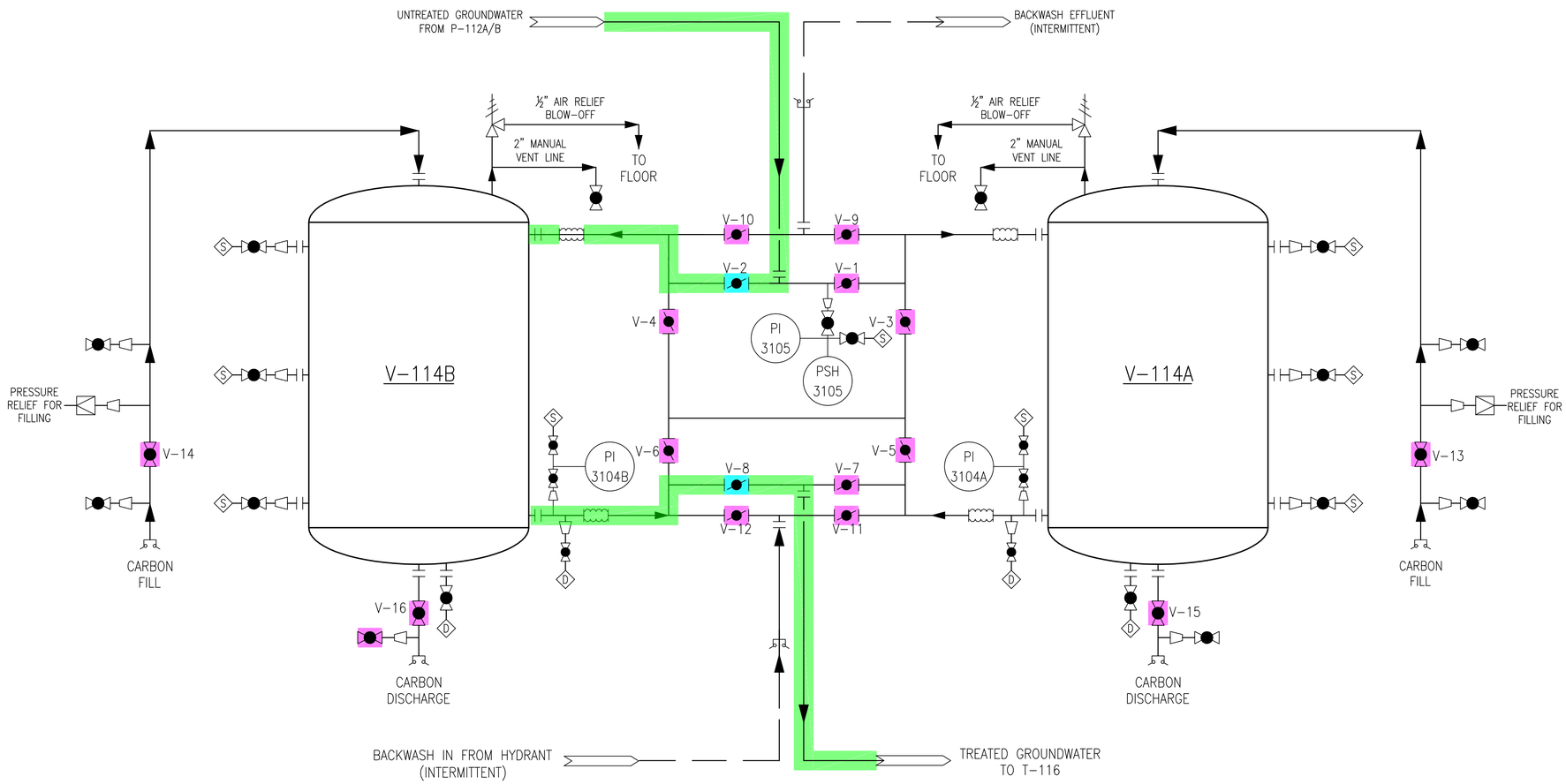

LEGEND

- EXPANSION JOINT
- BALL VALVE
- PRESSURE SWITCH
- REDUCER
- PRESSURE GUAGE
- RUPTURE DISK
- MANUALLY OPERATED BUTTTERFLY VALVE
- QUICK CONNECT CAM LOCK FITTING
- AIR RELIEF VALVE
- S — SAMPLE PORT
- FC — FLUSH CONNECTION
- D — DRAIN CONNECTION

- CLOSED VALVE
- OPEN VALVE
- GROUND WATER FLOW

U.S. ARMY ENGINEER DISTRICT
CORPS OF ENGINEERS
ALBUQUERQUE, NEW MEXICO

CLIENT DWG NO:

CARBON BED VALVE POSITIONS

SINGLE BED

B ONLINE A OFFLINE

FOR:

NO.	REVISION	DRAWN	CK'D	APPD	DATE

DRAWN:	CK'D:	APPD:	DATE:	SCALE:	PROJ NO:	DWG NO: FIGURE E-5	REV:

THIS PAGE INTENTIONALLY LEFT BLANK

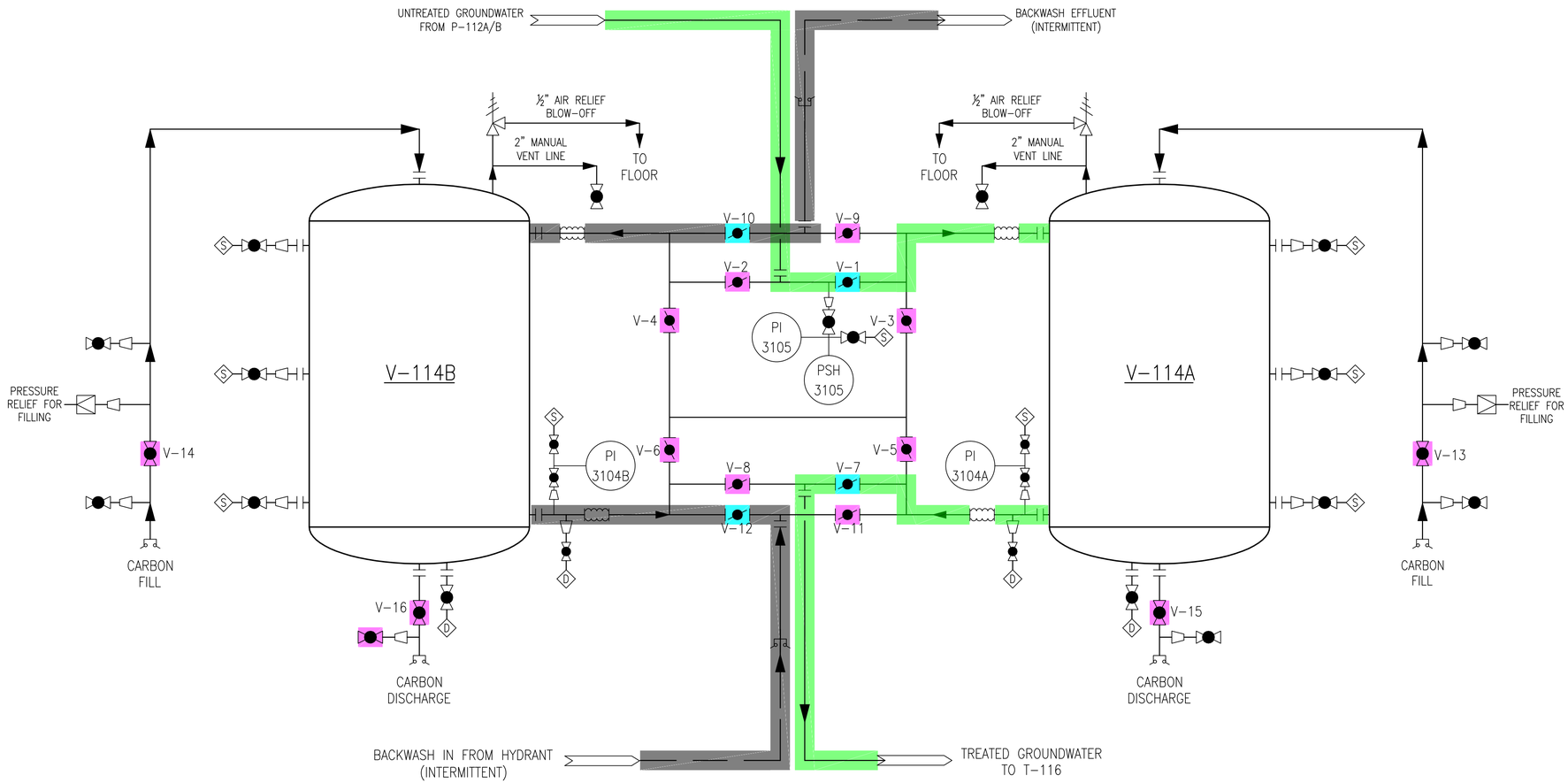

LEGEND

- EXPANSION JOINT
- BALL VALVE
- PRESSURE SWITCH
- REDUCER
- PRESSURE GUAGE
- RUPTURE DISK
- MANUALLY OPERATED BUTTTERFLY VALVE
- QUICK CONNECT CAM LOCK FITTING
- AIR RELIEF VALVE
- S — SAMPLE PORT
- FC — FLUSH CONNECTION
- D — DRAIN CONNECTION

- CLOSED VALVE
- OPEN VALVE
- GROUND WATER FLOW
- BACKWASH FLOW

U.S. ARMY ENGINEER DISTRICT
CORPS OF ENGINEERS
ALBUQUERQUE, NEW MEXICO

CLIENT DWG NO:

CARBON BED VALVE POSITIONS

ONLINE AND BACKWASH

A ONLINE B BACKWASH

FOR:

NO.	REVISION	DRAWN	CK'D	APPD	DATE

DRAWN:	CK'D:	APPD:	DATE:	SCALE:	PROJ NO:	DWG NO: FIGURE E-6	REV:

THIS PAGE INTENTIONALLY LEFT BLANK

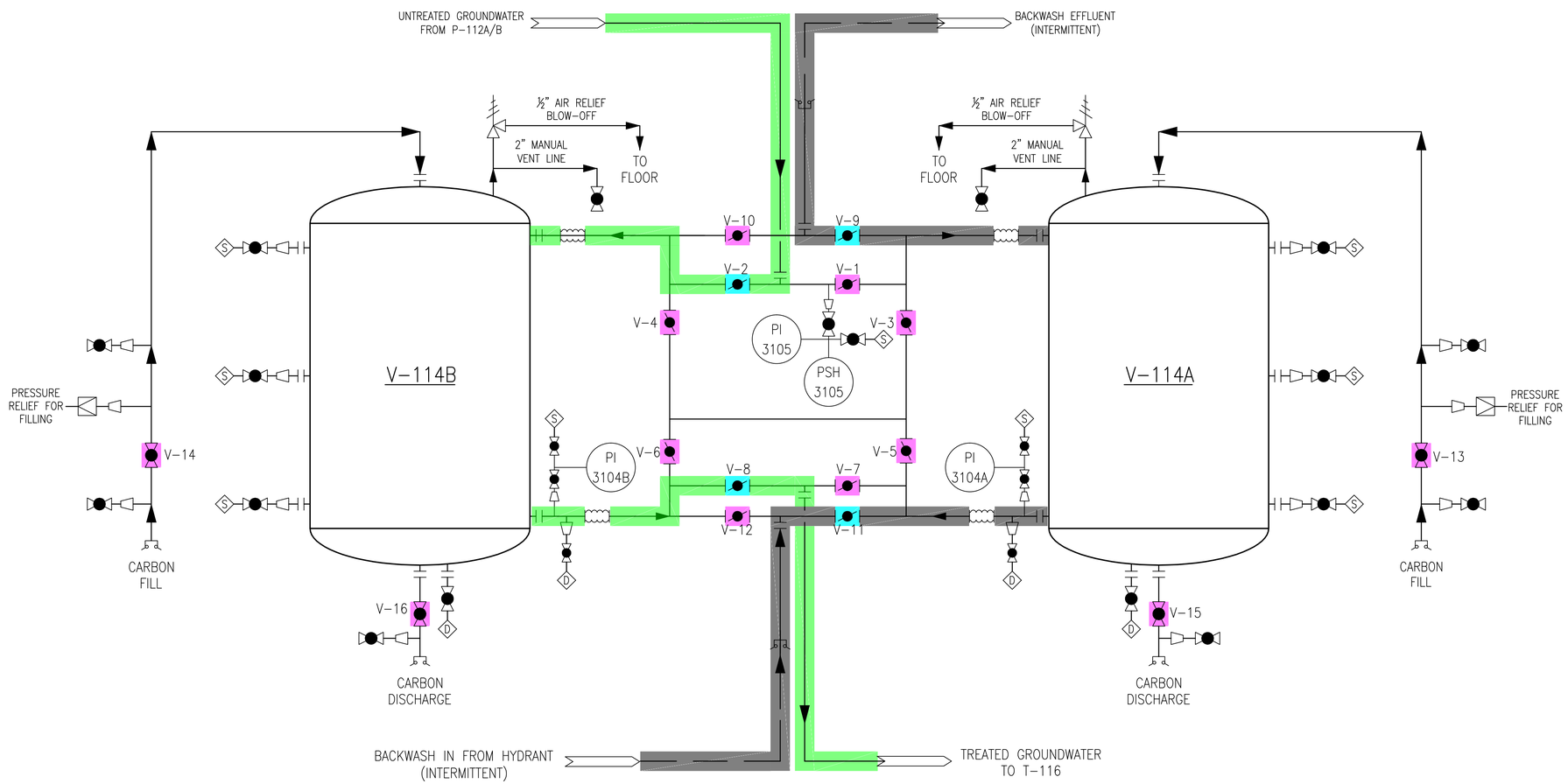

LEGEND

- EXPANSION JOINT
- BALL VALVE
- PRESSURE SWITCH
- REDUCER
- PRESSURE GUAGE
- RUPTURE DISK
- MANUALLY OPERATED BUTTTERFLY VALVE
- QUICK CONNECT CAM LOCK FITTING
- AIR RELIEF VALVE
- S — SAMPLE PORT
- FC — FLUSH CONNECTION
- D — DRAIN CONNECTION

- CLOSED VALVE
- OPEN VALVE
- GROUND WATER FLOW
- BACKWASH FLOW

U.S. ARMY ENGINEER DISTRICT
CORPS OF ENGINEERS
ALBUQUERQUE, NEW MEXICO

CLIENT DWG NO:

CARBON BED VALVE POSITIONS

ONLINE AND BACKWASH

B ONLINE A BACKWASH

FOR:

NO.	REVISION	DRAWN	CK'D	APPD	DATE

DRAWN:	CK'D:	APPD:	DATE:	SCALE:	PROJ NO:	DWG NO: FIGURE E-7	REV:

THIS PAGE INTENTIONALLY LEFT BLANK

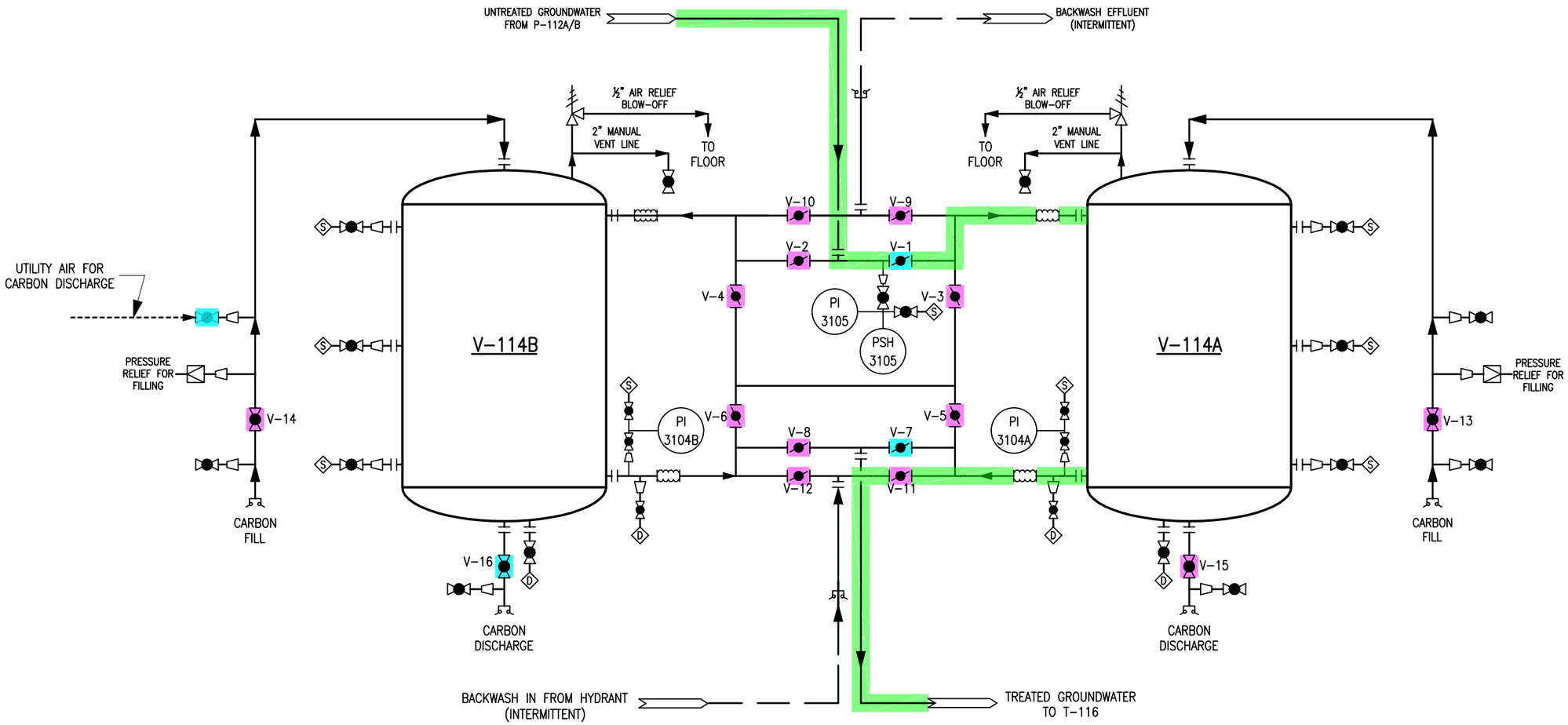

LEGEND

- EXPANSION JOINT
- BALL VALVE
- PRESSURE SWITCH
- REDUCER
- PRESSURE GUAGE
- RUPTURE DISK
- MANUALLY OPERATED BUTTERFLY VALVE
- QUICK CONNECT CAM LOCK FITTING
- AIR RELIEF VALVE
- S — SAMPLE PORT
- FC — FLUSH CONNECTION
- D — DRAIN CONNECTION

- CLOSED VALVE
- OPEN VALVE
- GROUND WATER FLOW
- BACKWASH FLOW

U.S. ARMY ENGINEER DISTRICT
CORPS OF ENGINEERS
ALBUQUERQUE, NEW MEXICO

CLIENT DWG NO:

CARBON BED VALVE POSITIONS

ONLINE AND UNLOADING CARBON

A ONLINE B UNLOADING CARBON

FOR:

NO.	REVISION	DRAWN	CK'D	APPD	DATE

DRAWN:	CK'D:	APPD:	DATE:	SCALE:	PROJ NO:	DWG NO: FIGURE E-8	REV:

THIS PAGE INTENTIONALLY LEFT BLANK

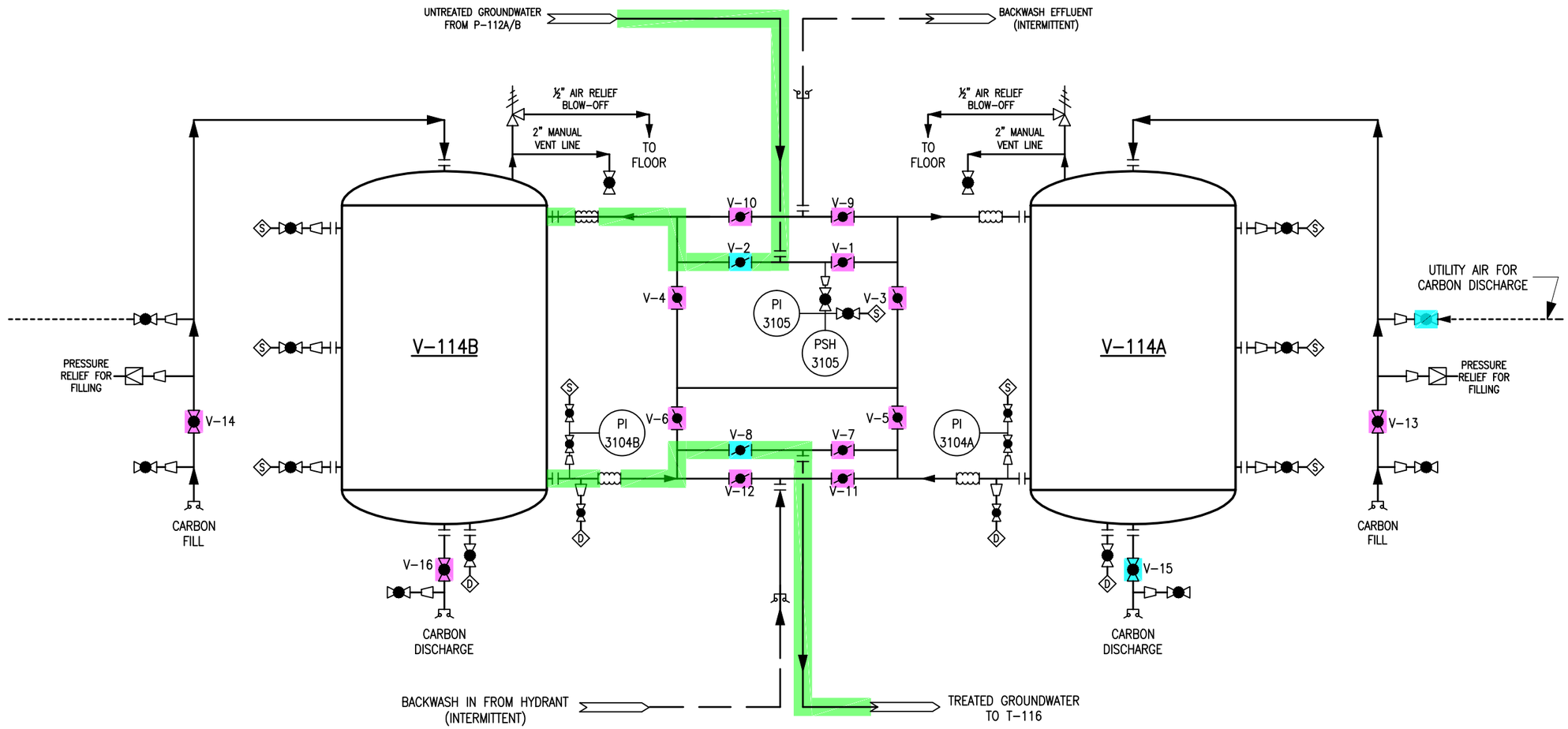

LEGEND

- EXPANSION JOINT
- BALL VALVE
- PRESSURE SWITCH
- REDUCER
- PRESSURE GUAGE
- RUPTURE DISK
- MANUALLY OPERATED BUTTERFLY VALVE
- QUICK CONNECT CAM LOCK FITTING
- AIR RELIEF VALVE
- S — SAMPLE PORT
- FC — FLUSH CONNECTION
- D — DRAIN CONNECTION

- CLOSED VALVE
- OPEN VALVE
- GROUND WATER FLOW
- BACKWASH FLOW

U.S. ARMY ENGINEER DISTRICT
CORPS OF ENGINEERS
ALBUQUERQUE, NEW MEXICO

CLIENT DWG NO:

CARBON BED VALVE POSITIONS

ONLINE AND UNLOADING CARBON

B ONLINE A UNLOADING CARBON

FOR:

NO.	REVISION	DRAWN	CK'D	APPD	DATE

DRAWN:	CK'D:	APPD:	DATE:	SCALE:	PROJ NO:	DWG NO: FIGURE E-9	REV:

THIS PAGE INTENTIONALLY LEFT BLANK

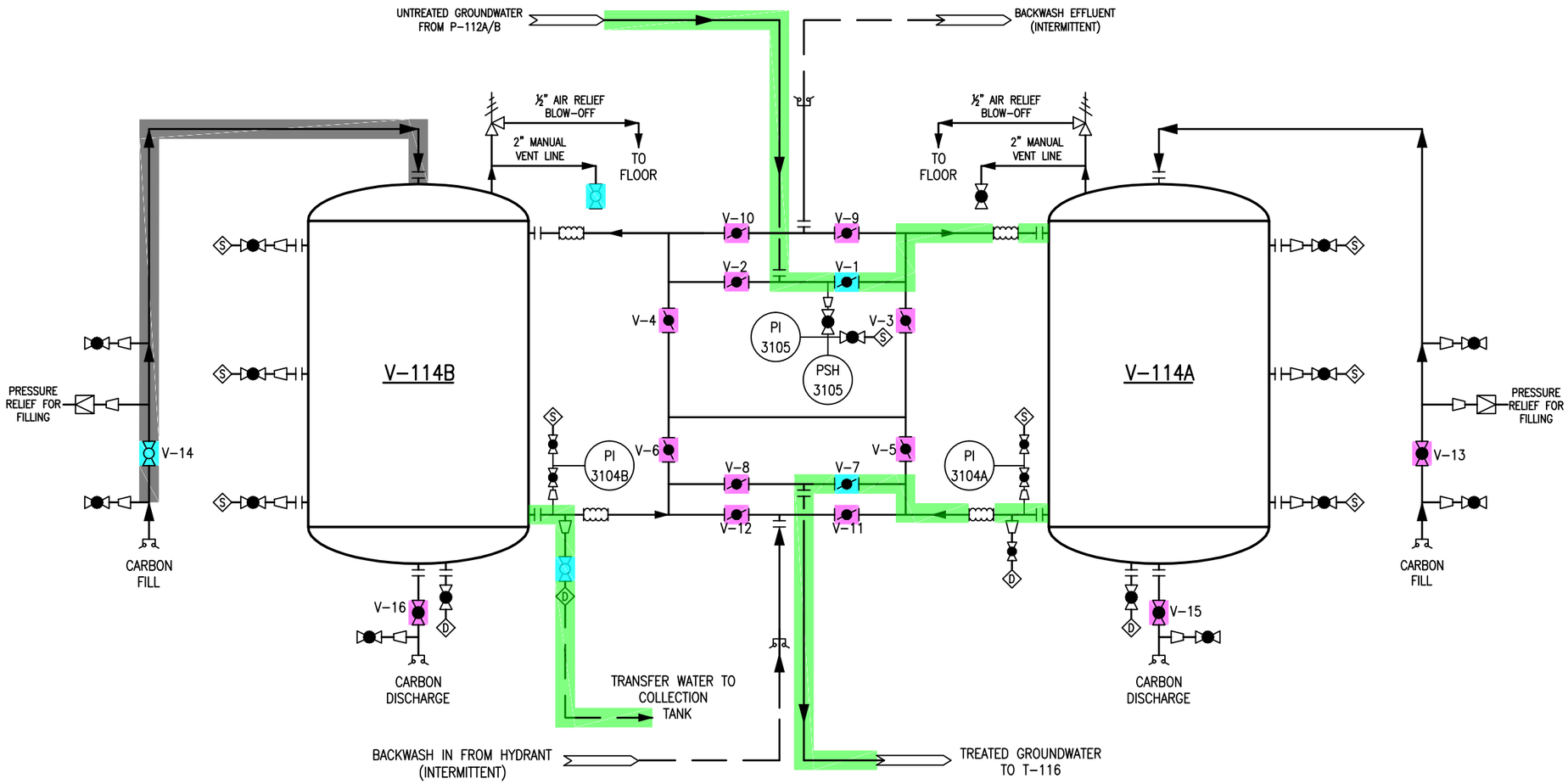

LEGEND

- EXPANSION JOINT
- BALL VALVE
- PRESSURE SWITCH
- REDUCER
- PRESSURE GUAGE
- RUPTURE DISK
- MANUALLY OPERATED BUTTERFLY VALVE
- QUICK CONNECT CAM LOCK FITTING
- AIR RELIEF VALVE
- S — SAMPLE PORT
- FC — FLUSH CONNECTION
- D — DRAIN CONNECTION

- CLOSED VALVE
- OPEN VALVE
- GROUND WATER FLOW
- CARBON SLURRY FLOW

U.S. ARMY ENGINEER DISTRICT
CORPS OF ENGINEERS
ALBUQUERQUE, NEW MEXICO

CLIENT DWG NO:

CARBON BED VALVE POSITIONS

ONLINE AND LOADING CARBON

A ONLINE B LOADING CARBON

FOR:

NO.	REVISION	DRAWN	CK'D	APPD	DATE

DRAWN:	CK'D:	APPD:	DATE:	SCALE:	PROJ NO:	DWG NO: FIGURE E-10	REV:

THIS PAGE INTENTIONALLY LEFT BLANK

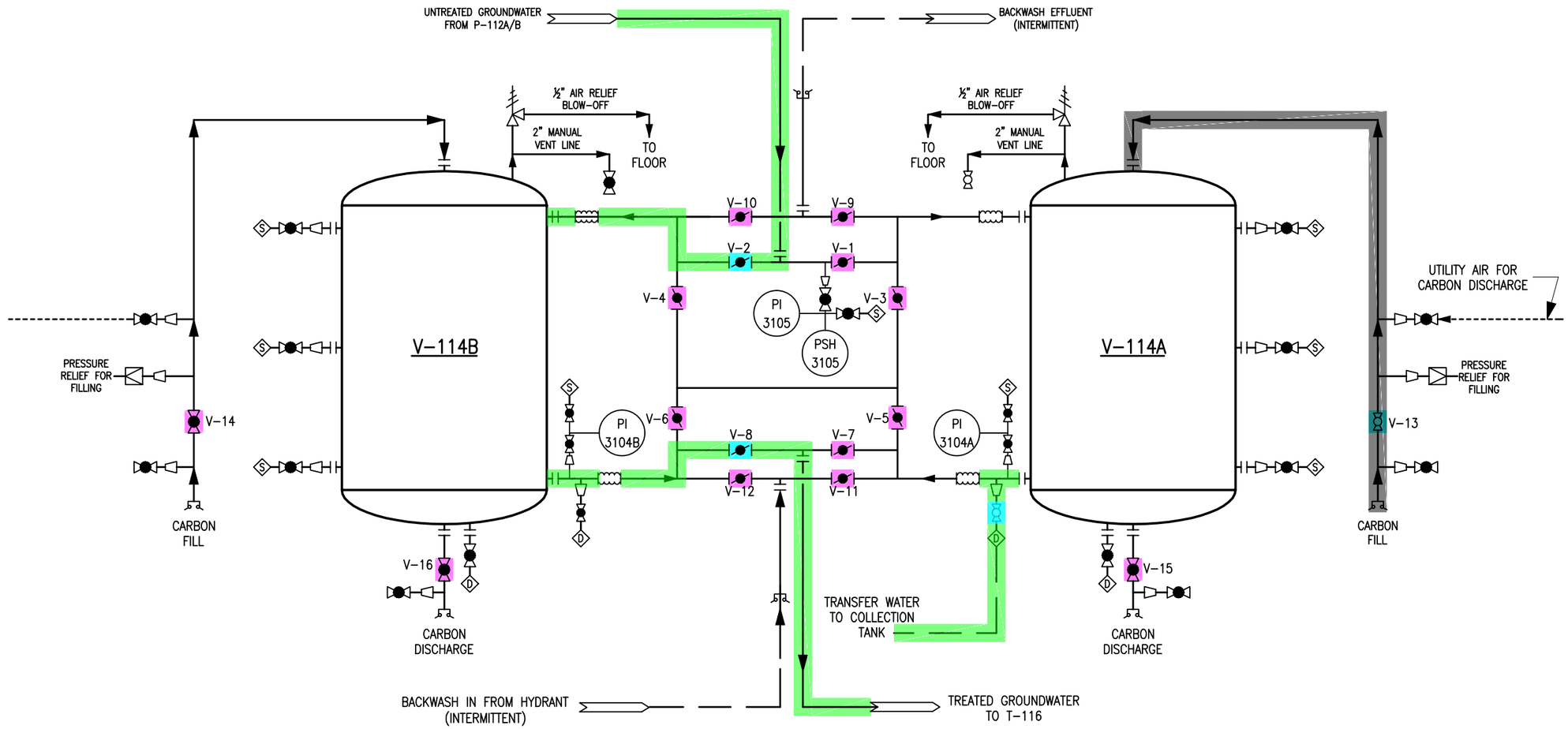

LEGEND

- EXPANSION JOINT
- BALL VALVE
- PRESSURE SWITCH
- REDUCER
- PRESSURE GUAGE
- RUPTURE DISK
- MANUALLY OPERATED BUTTERFLY VALVE
- QUICK CONNECT CAM LOCK FITTING
- AIR RELIEF VALVE
- S — SAMPLE PORT
- FC — FLUSH CONNECTION
- D — DRAIN CONNECTION

- CLOSED VALVE
- OPEN VALVE
- GROUND WATER FLOW
- CARBON SLURRY FLOW

U.S. ARMY ENGINEER DISTRICT
CORPS OF ENGINEERS
ALBUQUERQUE, NEW MEXICO

CLIENT DWG NO:

CARBON VALVE POSITIONS
ONLINE AND LOADING CARBON
B ONLINE A LOADING CARBON

FOR:

NO.	REVISION	DRAWN	CK'D	APPD	DATE

DRAWN:	CK'D:	APPD:	DATE:	SCALE:	PROJ NO:	DWG NO: FIGURE E-11	REV:

THIS PAGE INTENTIONALLY LEFT BLANK

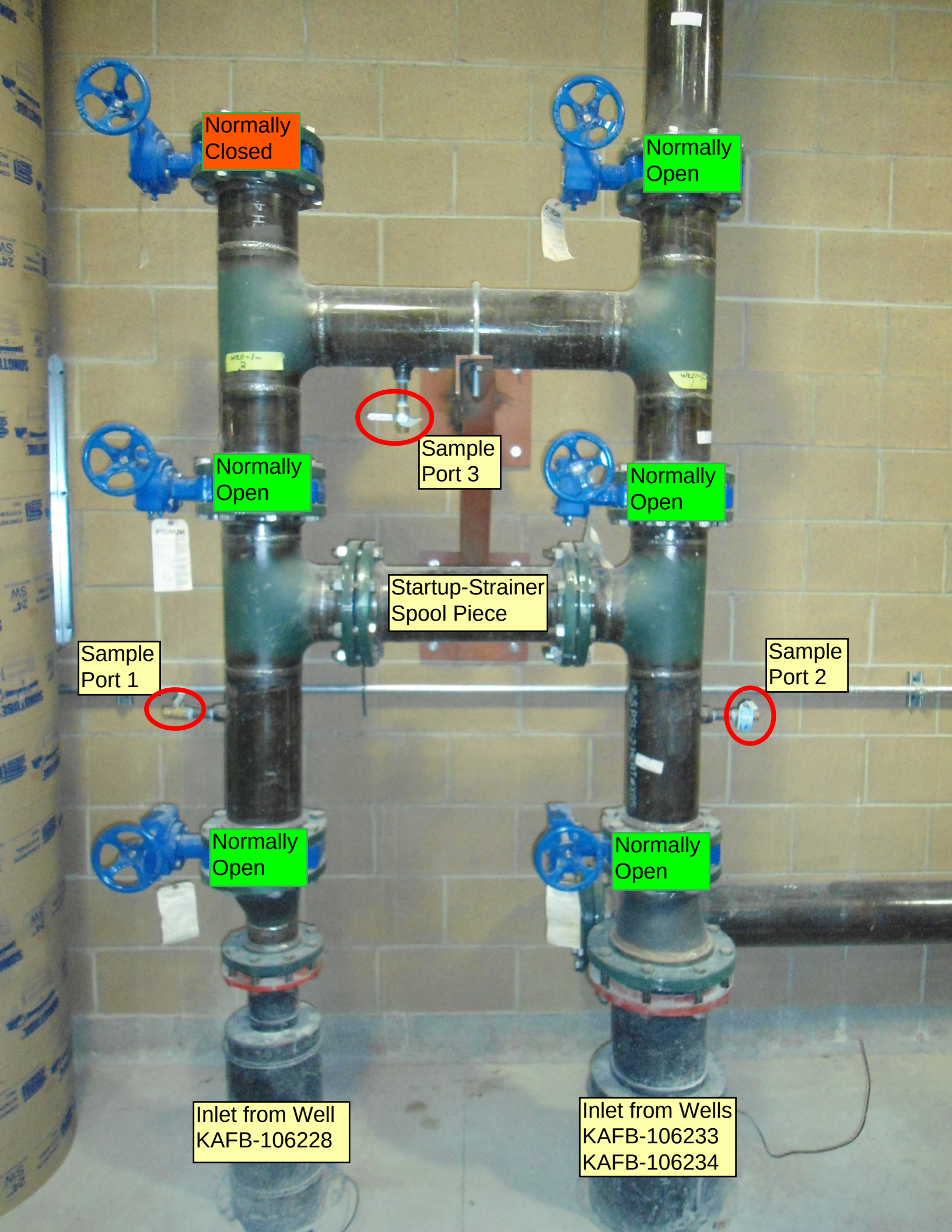
Normally Closed
Normally Open
Sample Port 3
Normally Open
Normally Open
Startup-Strainer Spool Piece
Sample Port 1
Sample Port 2
Normally Open
Normally Open
Inlet from Well KAFB-106228
Inlet from Wells KAFB-106233 KAFB-106234

THIS PAGE INTENTIONALLY LEFT BLANK

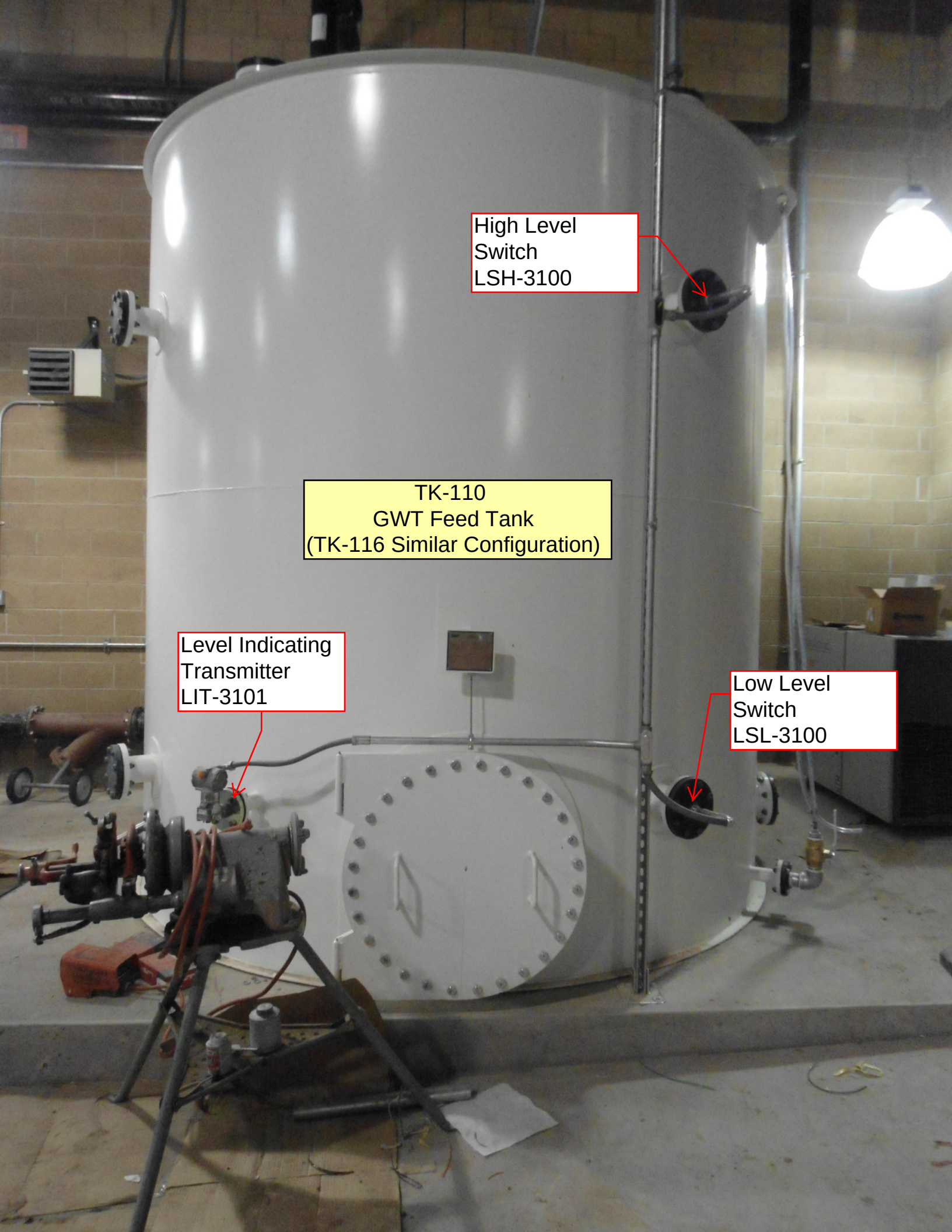
High Level
Switch
LSH-3100
TK-110
GWT Feed Tank
(TK-116 Similar Configuration)
Level Indicating
Transmitter
LIT-3101
Low Level
Switch
LSL-3100

THIS PAGE INTENTIONALLY LEFT BLANK

F-112A
PI-3102
F-112B
Normally Open
Normally Open
Normally Open
Normally Open
P-112A
P-112B

THIS PAGE INTENTIONALLY LEFT BLANK

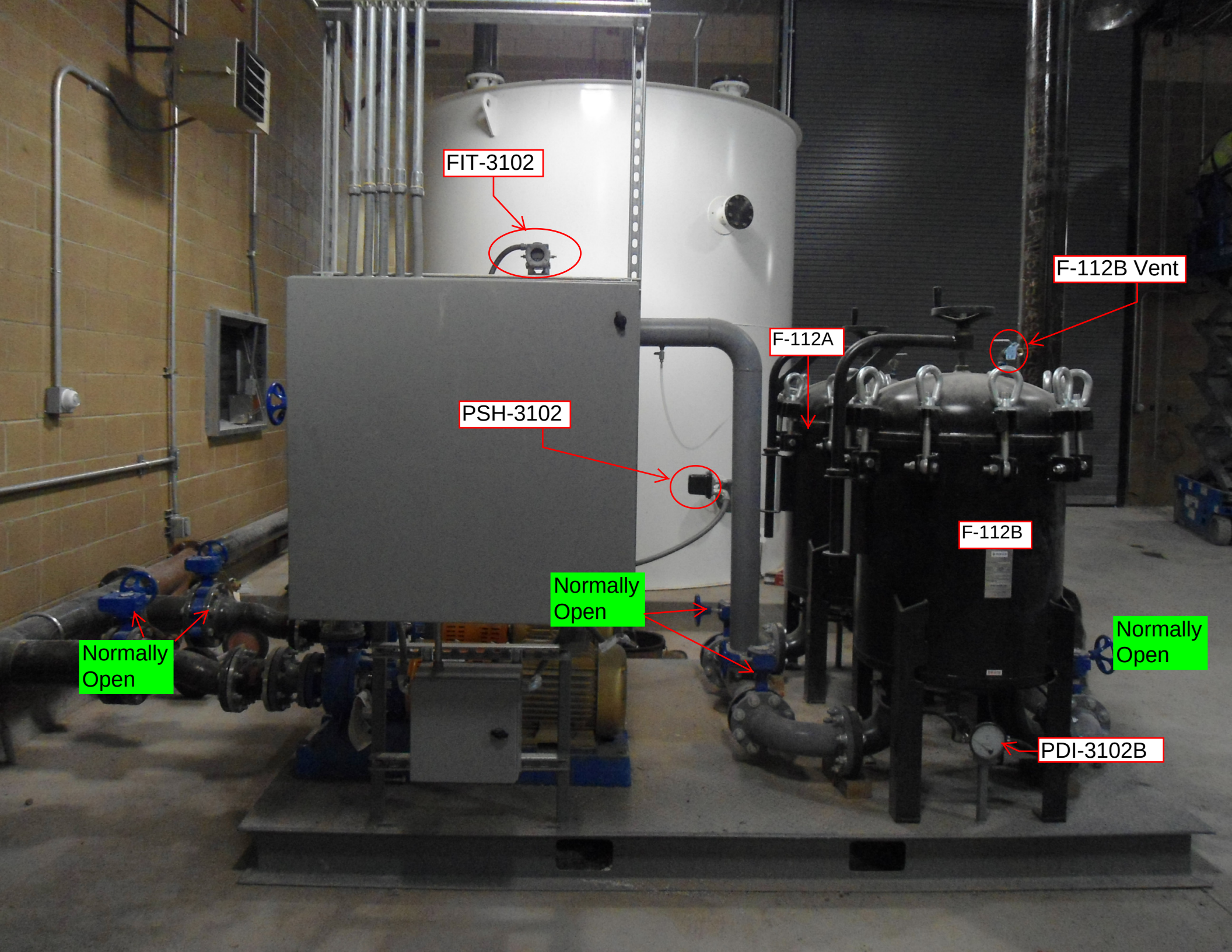
FIT-3102
F-112B Vent
F-112A
PSH-3102
F-112B
Normally Open
Normally Open
Normally Open
PDI-3102B

THIS PAGE INTENTIONALLY LEFT BLANK

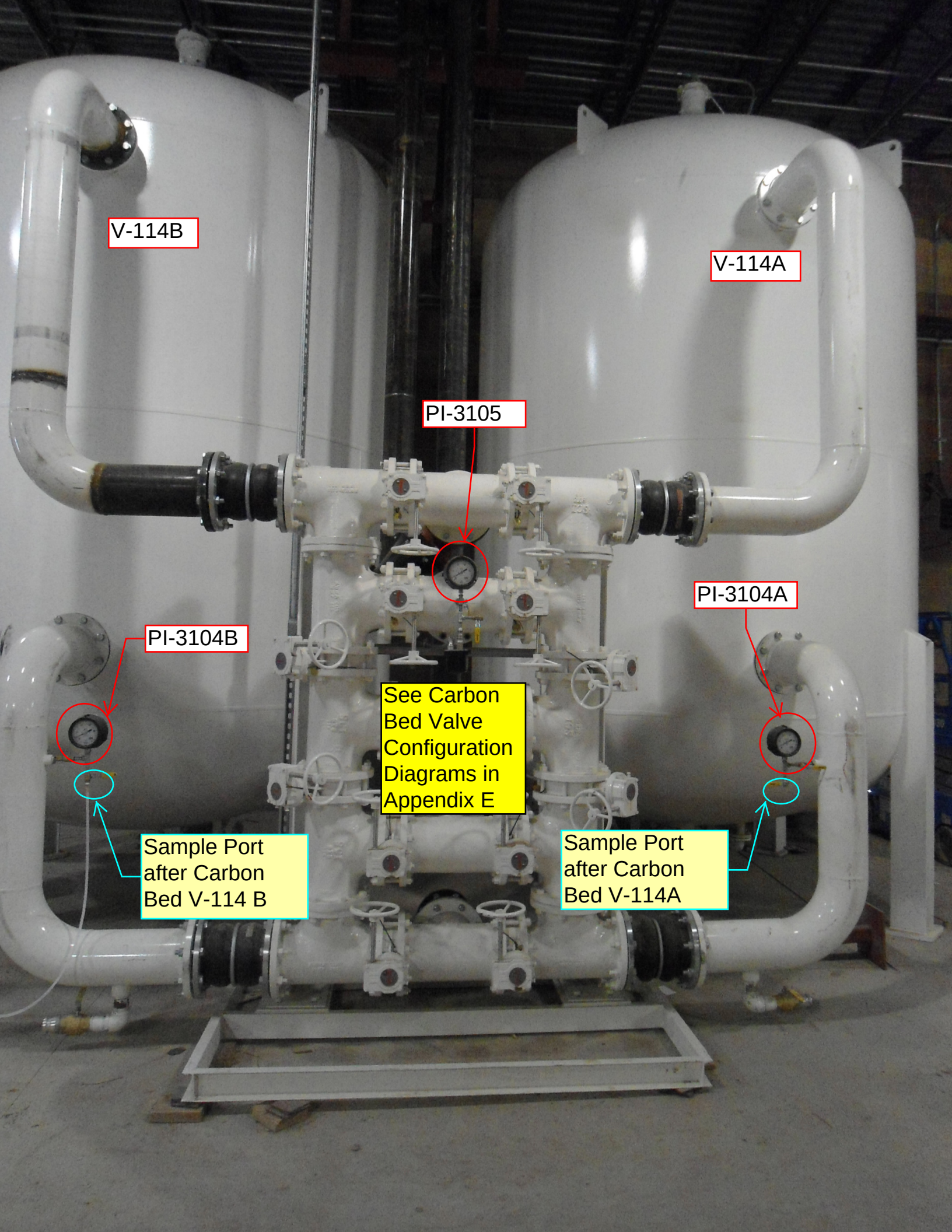
V-114B
V-114A
PI-3105
PI-3104A
PI-3104B
See Carbon Bed Valve Configuration Diagrams in Appendix E
Sample Port after Carbon Bed V-114 B
Sample Port after Carbon Bed V-114A

THIS PAGE INTENTIONALLY LEFT BLANK

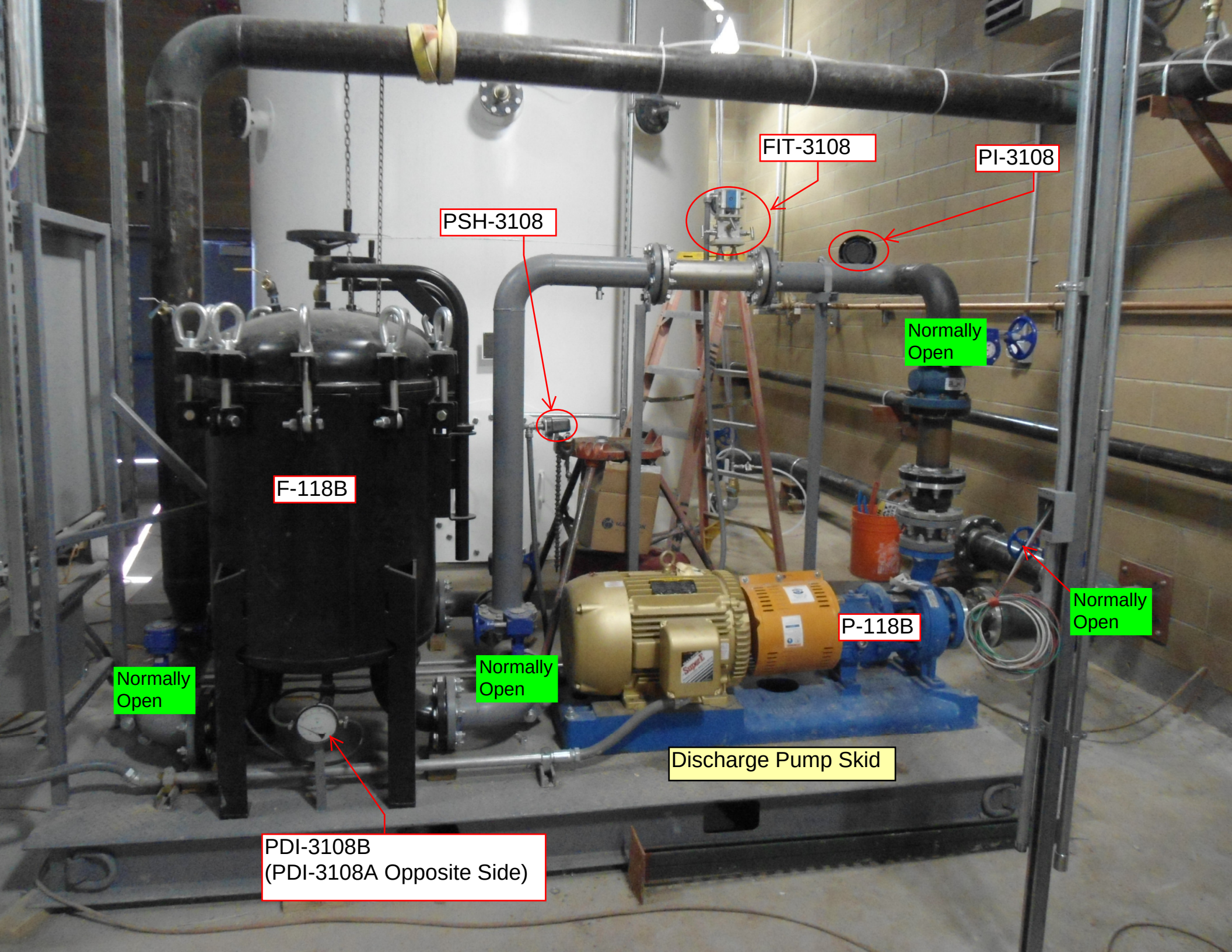
FIT-3108
PI-3108
PSH-3108
Normally Open
F-118B
Normally Open
Normally Open
P-118B
Normally Open
Discharge Pump Skid
PDI-3108B
(PDI-3108A Opposite Side)

THIS PAGE INTENTIONALLY LEFT BLANK

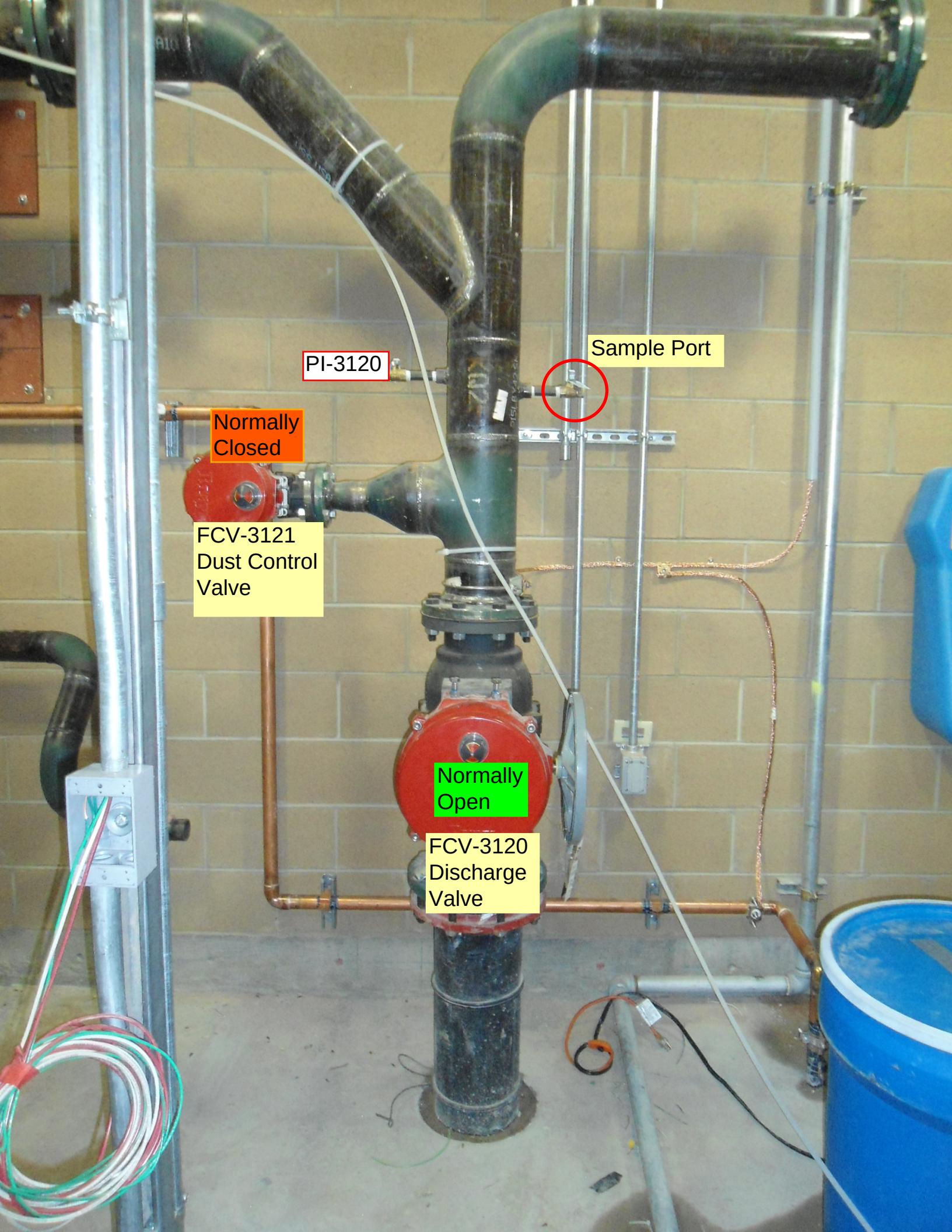
PI-3120
Sample Port
Normally Closed
FCV-3121 Dust Control Valve
Normally Open
FCV-3120 Discharge Valve

THIS PAGE INTENTIONALLY LEFT BLANK

APPENDIX F

Process-Control Description

THIS PAGE INTENTIONALLY LEFT BLANK

SECTION 40 96 00

PROCESS CONTROL DESCRIPTION
03/31/16

PART 1 GENERAL

1.1 RELATED DOCUMENTS

Drawings and general provisions of the Contract apply to this Section. Sections 40 95 00 PROCESS CONTROL and 26 20 00 INTERIOR DISTRIBUTION SYSTEM are relevant to this section.

[See also Appendix G for the User Interface Screens]

1.2 SUMMARY

Section includes process control operations, interlocks, and control methodology for programming the PLC and HMI:

Main System Sections

1. Process System Overview
2. KAFB-106228 Control
3. Main Treatment Plant Control
4. KAFB-106233 and KAFB-106234 Control
5. Injection Well and Pond Level Control
6. Communication System
7. Historical Data and User Interface Screens
8. Internet Based Monitoring
9. Identification
10. Field Quality Control
11. Start-Up Service
12. Software Service Agreement

1.3 DEFINITIONS

The following definitions are relevant to this document

GWTS: Groundwater Treatment System

HIM: Human Interface Module

HMI: Human Machine Interface

I/O: Inputs/Outputs

P&ID: Piping and Instrumentation Diagram

PID: Proportional, Integral, Derivative

PLC: Programmable Logic Controller

SCADA: Supervisory Control and Data Acquisition

VFD: Variable Frequency Drive

CB&I is also referred to by any of the following terms: Architect, Engineer, Engineering, Site Construction Manager or CB&I Federal Services, Inc.

1.4 SUBMITTALS

CB&I Federal Services, LLC approval is required for submittals with a "D" designation; submittals not having a designation shall be provided for information only. The following shall be submitted in accordance with Section 01 33 00 SUBMITTAL PROCEDURES:

SD-01 Product Data

Product Sheets; D

Technical Data Sheets; D

Accessory Information; D

SD-02 Screen Captures

HMI Screens; D

Internet Monitoring Screens; D

SD-03 Programming Philosophy

Programming Methodology; D

PLC File List; D

SD-04 Operation and Maintenance Data

Record Drawings; D

Operation and Maintenance Manual; D

1.5 QUALITY ASSURANCE / QUALITY CONTROL

The Subcontractor is responsible for implementing procedures to ensure compliance with these specifications and the subcontract requirements. The Subcontractor (also referred to as the contractor) is also responsible for performing, overseeing, and directing all QC activities including testing, inspections, and preparation of associated documentation necessary to verify compliance with these specifications. CB&I is responsible for witnessing

the Subcontractor's QC activities necessary to verify compliance with these specifications. The Government (also referred to as the owner) retains the right to perform QA inspections and/or testing on any materials or services provided under this contract. If any of the materials and/or services do not meet the requirements of the specifications and subcontract, the Subcontractor shall be required to correct the deficiency at no additional costs.

Programmer Qualifications: An entity that employs programmers, integrators, and supervisors who are trained by software vendor or their authorized representative. Programming lead shall have at least 5 years experience.

Source Limitations: All HMI and internet monitoring software programming packages shall be from one vendor. All programming and systems integration shall be performed and/or managed by a single integrator.

1.6 COORDINATION

Coordinate HMI and PLC programs with wireless communications system configuration as well as electrical connections.

1.6.1 ADDITIONAL WELLS, GOLF COURSE, AND INJECTION WELL

The Main Treatment System PLC programming shall incorporate control of Extraction Wells KAFB-106233 and KAFB-106234, monitoring of the Main Pond level at the Tijeras Arroyo Golf Course, and control of the Injection Well (KAFB-7) equipment.

There are several telemetric links to be incorporated into the control system. These links shall be coordinated so that addresses of components are not duplicated, radio links are highly reliable, and the system is resilient to a loss of communication.

PART 2 PRODUCTS

2.1 MANUFACTURERS

HMI: Subject to compliance with requirements, provide HMI programming software Automation Direct Point of View and associated drivers. Submit any substitutions with written justification for Engineering approval.

PLC Software: Subject to compliance with requirements, provide PLC programming software Rockwell Automation RSLogix 500 and associated drivers to allow coordination with the PLC specified on the Drawings. Submit any substitutions with written justification for Engineering approval.

Internet Monitoring Software: Subject to compliance with requirements, provide internet process monitoring programming software for the PLC/HMI. Submit any substitutions with written justification for Engineering approval.

Cellular Callout Device: Subject to compliance with requirements, provide cellular text message and/or email alarm notification devices and any related equipment as indicated on the drawings. Submit these devices for Engineering approval.

Ethernet Radio: Subject to compliance with requirements, provide Synetcom WISE-B-900 Ethernet radios with associated antennas to telemetrically link the various locations for the project. Submit any substitutions with written justification for Engineering approval.

Remote I/O: Subject to compliance with requirements, provide Allen-Bradley CompactLogix equipment for the remote I/O racks indicated. Submit any substitutions with written justification for Engineering approval.

Well Level Sensor: Subject to compliance with requirements, provide an In-Situ LevelTROLL 700 data logger and well level transmitter for measuring the level of the extraction wells located North-of-Gibson. Submit any substitutions with written justification for Engineering approval.

2.2 SOURCE QUALITY CONTROL

Factory Tests: Test and inspect assembled control panels with all programming installed.

Tests to be performed:

1. Switch digital signals and confirm operations.
2. Generate analog signals and check ranges and HIGH/LOW warnings and alarms in SCADA database and alarm tables.
3. Verify proper response of PID loops.
4. Simulate running conditions with all control panels and PLCs interconnected through an Ethernet network and check all interlocks and alarms.
5. Perform complete functional test through all modes.

Programming will be considered defective if it does not pass tests and inspections. Test and Inspection reports shall be prepared.

PART 3 EXECUTION

3.1 PROCESS SYSTEM OVERVIEW

The following is a description of each of the component systematic parts for the System.

3.1.1 Main Treatment Plant

Contaminated groundwater from the 3 extraction wells will be piped to a treatment facility located on Kirtland AFB property.

The groundwater treatment plant will consist of a treatment building that houses various piping, process equipment, and instrumentation and controls needed for the remediation of ethylene dibromide (EDB) and potentially other VOCs. The groundwater treatment system uses carbon beds to remove EDB from the groundwater.

In order to achieve the ultimate design capacity of 800 gpm, the groundwater treatment system design includes two parallel treatment trains, each with the capacity to treat 400 gpm of groundwater. Initially, only one of the treatment trains will be installed.

Each treatment train contains a 6,000 gallon influent equalization tank with level feedback to the PLC.

During initial operation of the groundwater extraction and treatment system, only one extraction well (KAFB-106228) will be in service. Pump tests and operation of this well during the 3rd and 4th quarters of 2015; show that this well typically produces 110 to 120 gpm of groundwater, which is well below the 400 gpm design capacity of the first groundwater treatment train. In order to accommodate this degree of turndown, the groundwater feed skid includes two pumps, both rated for 50% of design capacity or 200 gpm. Additional wells, KAFB-106233 and KAFB-106234, were installed in late December of 2015. These wells are expected to produce a combined total of 250 to 300 gpm of groundwater.

The two carbon adsorbers in the treatment system are 10-feet in diameter and designed for optimal EDB removal at flow rates between 120 and 400 gpm. At flow rates below 120 gpm the groundwater loading on the bed (gpm/square foot of bed cross-section) will be low enough that flow distribution and EDB removal may suffer. At flow rates above 400 gpm, residence time in the carbon beds will decrease and EDB removal may be reduced. These flow rate limits will only be a concern if the inlet concentration of EDB into the carbon beds exceeds 1 µg/L. EDB inlet concentration during 2015 was typically below 0.2 µg/L and at this low inlet concentration the carbon beds will give good EDB removal at flow rates between 60 and 600 gpm. The carbon beds operate in lead-lag configuration.

A 6,000 gallon holding tank will house the treated water before discharge. A portion of the discharge water can be diverted to a hose connection to fill water trucks located immediately outside of the treatment plant. The treated water may be used for dust control inside the facility fence line.

Treated groundwater will be piped to the effluent pipeline which connects to a junction with an existing pipeline leading from well KAFB-7 to the main pond at the on-base Tijeras Arroyo golf course. During the summer months the treated water is used for irrigation of the golf course. During the winter months when the demand for irrigation water is low, the majority of the treated water is directed to well KAFB-7 for reinjection into the aquifer.

3.1.2 Extraction System

The extraction system will initially consist of only one extraction well (KAFB-106228). Two additional wells (KAFB-106233 and KAFB-106234) will be operational in December 2015.

3.1.2.1 Extraction Well KAFB-106228

Extraction well KAFB106228 was installed in June 2015 and is located off of base property in between Gibson Boulevard SE and Mitchell Road in the Christ United Methodist Church parking lot at 6200 Gibson Boulevard SE. At this location, the groundwater level is approximately 460 feet below ground surface. The extraction well will be 8 inches in diameter and screened from 15 feet above the water table to approximately 60 feet below water to capture the dissolved-phase EDB plume. The well is fitted with a submersible well pump (480-volt, three-phase).

A well vault was installed to house and protect the wellhead, plumbing, fittings, and remote instrumentation necessary for extraction well operation

and monitoring. The low profile, lockable well vault will be concrete constructed with H-20 traffic-rated cover, and flush-mounted with the existing grade. This installation allows unimpeded truck and automobile traffic through the alley. The well vault has a concrete collar for protection. Instrumentation and controls within the well vault include pump controls and leak-monitoring devices. A motor actuated control valve at the wellhead is used to regulate flow rate and pressure.

Electrical power for the well pump and instrumentation is sourced from nearby Power New Mexico (PNM) overhead lines. The existing single-phased overhead line in the alley was upgraded to three-phase power, and extended to one pole west of the wellhead vault by using the existing overhead system (upgrading poles as needed). The nearest pole is equipped with a pole top three-phase transformer that feeds 480 volt, three-phase power routed overhead to an above-grade rack. The rack is located in a shed within the church parking lot and is protected by bollards. The rack secures a 200-ampere line disconnect switch, service meter (provided by PNM), and service entrance disconnect. The panels are lockable. Power from the service disconnect breaker is routed to the well pump motor starter and small power center on the above grade rack. Power is then routed underground to the wellhead vault to power the well pump motor, a convenience receptacle, and the Flow Control Valve motor operator.

There are provisions in the design to increase the capacity of the groundwater treatment system to 800 gpm. This will require installation of additional extraction wells.

3.1.2.2 North-of-Gibson Extraction Wells

During the 4th quarter of 2015, 2 additional Extraction Wells (KAFB-106233 & KAFB-106234) were installed in the Elder Homestead subdivision, North of Gibson Boulevard. The wells are located in the city streets under authority of the existing City of Albuquerque right-of-way. Well KAFB-106233 is located at the end of California Street SE near its intersection with Gibson Boulevard and Well KAFB-106234 is located at the southeast corner of the intersection of Anderson Avenue and Georgia Avenue. These wells are installed in below-grade concrete wellhead vaults.

Electric Power for the pumps is supplied from a pump control house (on-base), through cable installed in conduit that runs parallel to the groundwater pipeline from the well to the pump control house. Power to the pump control house is sourced from Base power. An existing sectionalizer vault with a spare tap is utilized to bring 12.47kV 3-Phase, 3-Wire service to a new Δ-Y, 12.47kV:480/277VAC Transformer. This transformer provides power for the two new extraction well pumps.

Each pump is separately powered by a semiconductor style reduced voltage soft starter located within the Pump Control House. Power is routed in 2” conduit to each pump separately, along the path that the water piping takes.

The well vault for each well contains conductivity style leak detection sensors for sensing a leak in the vault and also for sensing a leak within the secondary containment surrounding the water pipe. In addition, the well vault contains a level sensor to sense the water level in each well. This level sensor is also a data logger. The installed system has the capability of disconnecting the level sensor in the termination box at the well vault in order to connect a hand-held-PC style reader to collect the history of

well level. When measurements are completed, the system will be reconnected to return to automatic system operation.

The Pump Control House contains flow transmitters to send flow information to the Main treatment System PLC. One flow transmitter for each well is installed. In addition, the Pump Control House contains conductivity style leak detection sensors to monitor for a leak in the secondary containment of the pipe leaving the Pump Control House and to monitor for a leak within the Pump Control House.

The Pump Control House also contains motor actuated control valves for each well. These valves will allow the Main Treatment System PLC to modulate the flow of water from each well.

All collected information is sent to the Treatment System PLC for logging and processing via a telemetric Ethernet link.

3.1.3 Influent Pipeline

Contaminated groundwater from the wells is pumped through double-walled high density polyethylene pipe (that includes a leak detection system) to the full-scale GWTS. This influent piping is installed under the surface streets and alleys off-base and underground in existing utility corridors on-base. The pipeline from well KAFB 106228 runs directly to the treatment system while the pipe runs from wells KAFB-106233 and KAFB-106234 go to a pump control house that is located just inside base property where the groundwater from these two wells is combined into a larger line.

3.1.4 Injection Well System

The treated groundwater is transported via a single-walled high density polyethylene pipe to a junction with an existing pipeline leading from well KAFB-7 to the main pond at the on-base Tijeras Arroyo golf course. During the summer months the treated water is used for irrigation of the golf course. During the winter months when the demand for irrigation water is low, the treated water is directed to well KAFB-7 for reinjection into the aquifer.

The well KAFB-7 was an irrigation well that has been temporarily converted into an injection well. The well pump has been removed and a 4-inch diameter drop pipe for groundwater injection has been installed. The drop pipe terminates about 525 feet bgs (25 feet below static water level) and a V-smart downhole flow control valve is fitted to the end of the drop pipe. The V-smart valve is a hydraulically actuated valve that is used to ensure that the drop pipe is maintained full of water to prevent cavitation and damage to the pipe. The hydraulic control pump for the V-smart valve is located outside of the KAFB-7 control house. The hydraulic pump is controlled by the PLC at the GWTS.

The injection well also has a level transducer in the well to measure water level in the well and a pressure transducer at the top of the wellhead to measure pressure at that location. Power for the electrical Injection Well components is sourced from an existing panel installed in the KAFB-7 control house. These components consist of heat trace for above-ground piping, control voltage for the remote I/O components, power supply to a telemetry system and power for the V-smart valve hydraulic control pump. The control

panel for the injection well components is mounted outside of the existing KAFB-7 control house.

The data from the level and pressure transducers is transmitted to the Main Treatment System PLC via an Ethernet radio telemetry system, which also handles the control signals to the V-smart valve hydraulic pump. In addition, a separate telemetric link is provided between the Tijeras Arroyo Golf Course's Main Pond and the KAFB-7 control house in order to obtain the level of the pond. This data will be transmitted to the Main Treatment System PLC via the Ethernet radio telemetry system.

3.1.5 Tijeras Arroyo Golf Course Installation

For much of the year (typically April to October) treated groundwater will be pumped to the Tijeras Arroyo Golf Course's main pond and used for golf course irrigation. For safety, the level of the pond will be monitored by the Main Treatment System PLC. If the level rises above acceptable levels, the Main Treatment System PLC will initiate an alarm. If the level continues to increase to an unacceptable level, a system shutdown to avoid overfilling the pond will be initiated.

Main Pond Level information is gathered by inserting a 4-20mA isolating amplifier in the loop of the existing 4-20mA level transmitter system at the Pond Control Building. This datum is transmitted to the KAFB-7 control house utilizing a remote I/O telemetry system as indicated.

3.2 EXTRACTION WELL KAFB-106228 CONTROL DESCRIPTION

The following control description for the Extraction Well and Wellhead Vault is for the KAFB-106228 extraction well and wellhead vault. Control for wells KAFB-106233 and KAFB-106234 is described in section 3.4.

3.2.1 Wellhead Vault and Valve Vault Interlocks and Alarms

Level Switch LSH-3000: The leak detection switch is located in the wellhead vault and provides a dry contact back to the PLC. Normal and alarm status is displayed on the HMI screen. A high level in the well vault will activate LSH-3000 interlock and will disable all groundwater well pumps (P-101, P-102 and P-103), initiate a remote alarm LAH-3000, and notify the operators of a leak in the wellhead vault. Operator intervention is required to restart the extraction well pumps.

Level Switch LSH-3002: This leak detection switch is located on the pipeline secondary containment in the wellhead vault and provides a contact back to the PLC. Normal and alarm status is displayed on the HMI screen. A high level in the containment will activate LSH-3002 interlock and will disable all well pumps, initiate a remote alarm LAH-3002, and notify the operators of a leak in the containment. Operator intervention is required to restart the extraction well pumps.

Level Switch LSH-3003: This leak detection switch is located on the pipeline secondary containment, in the valve vault, and provides a dry contact back to the PLC. Normal and alarm status is displayed on the HMI screen. A high level in the containment will activate LSH-3003 interlock and will disable all well pumps, initiate a remote alarm LAH-3003, and notify the operators

of a leak in the containment. Operator intervention is required to restart the extraction well pumps.

Level Switch LSH-3004: The leak detection switch is located in the valve vault and provides a dry contact back to the PLC. Normal and alarm status is displayed on the HMI screen. A high level in the well vault will activate LSH-3000 interlock and will disable all groundwater well pumps (P-101, P-102 and P-103) initiate a remote alarm LAH-3004, and notify the operators of a leak in the valve vault. Operator intervention is required to restart the extraction well pumps.

Loss of Power UEL-3010: On loss of power to the extraction well pump (P-101), the power supply in the extraction well control panel provides an alarm contact to the PLC and the power failure is displayed on the HMI screen. Power failure will initiate a remote alarm, EAL-3010, to notify the operators.

3.2.2 Extraction Well KAFB-106228 Controls and Interlocks

The following control description applies to Extraction Well (KAFB-106228) with Well Pump P-101, Flow Control Valve FCV-3001, and Flow Transmitter FIT-3001.

3.2.2.1 Remote Controls and Indications

The Treatment Plant Main Control Panel (CP-100) HMI display is programmed to show all extraction well system indications and controls including pump running status, flow measurement, flow total, control interlocks, and alarms. Well Pump HMI controls include AUTO/MANUAL selection, and a remote Jog function. For normal operation, the local HAND/OFF/AUTO switch HS-3001 in the wellhead control panel will indicate to the HMI that Well Pump P-101 is in AUTO mode. The well pump will not start through the HMI unless the local switch is in AUTO. After power loss and power-up, the Well Pump P-101 is automatically restarted if it is in AUTO mode.

Remote Modes Available:

Remote AUTO Mode
Remote MANUAL Mode

3.2.2.1.1 Remote AUTO Mode

Pump starting and stopping is controlled by the PLC at the Treatment Plant Control Panel (CP-100). The operator uses ZIC-3001 to adjust the position signal to the control valve FCV-3001 at the HMI to obtain the target groundwater extraction rate as measured by FIT-3001.
LAL-3001 is a low level alarm set point on the level transducer in the well that is set at 20 feet above the level transducer which is placed roughly 40 feet above the pump inlet. LAL-3001 will shut down P-101 and reset when the level in the well recovers to a preset level of 40 feet of water above the transducer, which is about 4 feet below the static water level. Also to protect the pump from running dry, a low current switch (ISL-3001) will turn the pump off to prevent damage to motor. The operator may restart the pump after low current shutdown. If not restarted manually it will restart after

a user-selected number of minutes (can be programmed or disabled on the HMI configuration screen; default is 1 minute).

3.2.2.1.2 Remote MANUAL Mode

A JOG button appears in MANUAL mode that allows the operator to run Well Pump P-101 through the PLC so long as the button is "pushed" on the screen.

3.2.2.2 Local Controls and Indications

3.2.2.2.1 Controls

Controls include HAND/OFF/AUTO HS-3001 selection switch on the wellhead motor starter panel MS-101.

3.2.2.2.2 Indications

Indicator lights include a red running light and a green stop light HL-3001 on motor starter panel MS-101.

Flow indicator FIT-3001 displays instantaneous groundwater flow rate for Well KAFB-106228. FQI-3001 displays total integrated groundwater flow.

PI-3001 shows pressure in the groundwater pipeline at the top of the wellhead.

TI-3001 shows the temperature of the groundwater at the top of the wellhead.

3.2.2.2.3 Interlocks

Well Pump P-101 is interlocked to shut down on Groundwater Treatment Feed Tank TK-110 high-high level alarm LAH-3100 at the Main Treatment Plant. The pump will be disabled and placed in MANUAL mode and require user intervention to restart.

All Well Pumps including P-101 are interlocked to shut down on Groundwater Treatment Feed Tank TK-110 high level alarm LAH-3101 as measured by LIT-3101. This alarm is user settable and set to 90”. Pump(s) will be disabled and placed in Remote MANUAL Mode and require user intervention to restart.

Well Pump P-101 is interlocked to shut down on a containment area leak detection alarm (LAH-3000, 3004, and LAH-3121 in the GWTS). Pump will be disabled and placed in Remote MANUAL Mode and require user intervention to restart.

Well Pump P-101 is interlocked to shut down on a pipeline containment leak detection alarm (LAH-3002 and LAH-3003). Pump will be disabled and placed in Remote MANUAL Mode and require user intervention to restart.

Well Pump P-101 is interlocked to shut down on containment area leak detection in the well vaults, air release valve vaults and well control house for well KAFB-106233 and KAFB-106234 and leak detection in the pipeline containment associated with these two wells. These include: LAH-4001, LAH-4002, LAH-5001, LAH-5002, LAH-6001, LAH-7001, LAH-7005 and LAH-

8001. Pump will be disabled and placed in Remote MANUAL Mode and require user intervention to restart.

Well Pump P-101 is interlocked to shut down on a low well water level alarm (LAL-3001) generated by the PLC via the signal from LIT-3001. Pump will be disabled and placed in Remote MANUAL Mode and require user intervention to restart.

Well Pump P-101 is interlocked to shut down on treatment plant shutdown.

When Well Pump P-101 Low Current from ISL-3001 is received, pump will turn off and remain off until a field-selectable amount of time passes (set by dial on current-sensing switch). Initially the delay will be set so that the pump will restart after a 2-hour time delay. The pump can also be restarted by the operator through the HMI.

Overload protection OL-3001 will shut the pump down. The operator will be required to reset OL-3001 manually at starter MS-101 to restart Well Pump P-101 after an overload protection shutdown.

3.3 MAIN TREATMENT PLANT CONTROL DESCRIPTION

The following is a description of the control system in the Treatment Plant.

3.3.1 Treatment Plant General Interlocks and Alarms

Leak Detection Interlock LSH-3121: Level Switch LSH-3121 is located in the groundwater system building containment sump and provides dry contacts back to the PLC. Normal and alarm status is displayed on the HMI screen. A leak detection alarm will disable all three extraction well pumps (P-101, P-102 and P-103), the Feed Pumps P-112 A/B, and the Treated Water Discharge Pump P-118 (effectively shutting down the entire plant). A leak will also initiate a remote alarm and notify the operators of a leak at the Treatment Plant. Operator intervention shall be required to restart the pumps.

Leak Detection Interlock LSH-3122: Level Switch LSH-3122 is located in the truck bay sump and provides contacts back to the PLC. Normal and alarm status is displayed on the HMI screen. An activation alarm will disable the Treated Water Discharge Pump P-118. An activated switch will also initiate a remote alarm and notify the operators of a leak at the Treatment Plant. Operator intervention shall be required to restart the pump.

Intrusion Detection Switches ZS-3123, ZS-3124, ZS-3125A/B and ZS-3126A/B: Located on each of the entry doors and provide a common signal back to the PLC and is displayed on the HMI screen as an alarm when active. Opening and closing of the door are logged events. Opening a door will also initiate a remote alarm, ZA-3123, ZA-3124, ZA-3125A/B and ZA-3126A/B, to notify the operators.

Low Temperature Switch TSL-3127: TSL-3127 provides a low temperature alarm contact back to the PLC and is displayed on the HMI screen. The switch will be set to alarm at 35 degrees F. Low temperature will initiate a remote alarm, TAL-3127, to notify the operators.

Smoke Detector Alarm UA-3128: Provides a contact back to the PLC and is displayed on the HMI screen. A smoke alarm will initiate a remote alarm UA-3128, to notify the operators and the Kirtland AFB fire department.

Loss of Power Alarm UA-3129: On loss of power to Treatment Plant, the uninterruptible power supply in the control panel provides an alarm contact to the PLC and displays the power failure on the HMI screen. Power failure will initiate a remote alarm, UA-3129, to notify the operators.

3.3.2 Groundwater Treatment Feed Pumps and their associated equipment and instrumentation (TK-110, P-112 A/B, FI-3102)

3.3.2.1 Remote Controls and Indications

The Treatment Plant main control panel (CP-100) HMI display is programmed to show Groundwater Treatment Feed Pump P-112A/B indications and controls including running status, running speed, flow measurement, flow total, and alarms that affect the pump. An Ethernet connection will be provided at main treatment plant control panel CP-100 to allow the operator to attach a laptop control station for programming purposes. In addition, all information and control functions are available to the operator via the computer touch screen mounted on the front of CP-100.

During the initial operation of the groundwater treatment system or anytime when there is only one extraction well in service, there are two automatic control options for the Groundwater Treatment Feed Pumps. If the results of the pump test show that the well can produce over 120 gpm of water (minimum design flow rate for the carbon beds), the feed rate to the carbon beds can be controlled by the level in TK-110. If the well produces less than 120 gpm, the feed rate will be controlled to 120 gpm using the groundwater feed flowmeter (FIC-3102) and VFD pump speed control (SIC-3102A/B). Until additional wells are installed, only one of the Groundwater Treatment Feed Pumps will be running at a given time.

HMI Controls for the Groundwater Treatment Feed Pumps (P-112 A/B) include Remote AUTO/MANUAL selection.

The local JOG/OFF/AUTO switches HS-3102 A/B exist as functions within the respective VFD and are accessed by way of the HIM on the VFD. This status indicates to the PLC that Groundwater Treatment Feed Pumps P-112A/B is in AUTO mode. The Groundwater Treatment Feed Pumps will not start through the HMI unless the local HIM for the VFD is in AUTO.

After power loss and startup, the system will require operator intervention to restart the system. This is to ensure that the plant components are healthy prior to a restart. Restart may be accomplished via the Remote Access System.

3.3.2.1.1 AUTO Mode (Automatic Flow Control)

Pump starting, speed, and stopping is controlled by the PLC at the Treatment Plant control panel (CP-100). The system is set to vary the flow rate by a user settable percentage (default is +/- 6%) as compared to the calculated inflow rate (sum of well pump flow rates). The sign of the difference is determined by pre-programmed Low and High level setpoints of 60- and 80-inches of tank TK-110 capacity as measured by LIT-3101. The outflow will be varied by modulating the speed of P-112A/B with SIC-3102A/B. If the level of the tank falls past 60-inches, the outflow will be -6% of the inflow, and P-112A/B & TK-110 will be in the “Fill” state. If the level of the tank rises

above 80-inches, the outflow will be +6% of the inflow, and P-112A/B & TK-110 will be in the “Drain” state. If the calculated outflow is less than 120gpm, P112A/B will turn off until the 80-inch tank level is reached. At that level, P112A/B will turn on and ramp to +6% of the inflow or, as a minimum, 120gpm. Maximum flow rate will be 500gpm regardless of the calculated outflow requirement; i.e. if the inflow evaluates to >500 gpm, the outflow will be set to 500gpm.

3.3.2.1.2 AUTO Mode (User Setpoint Flow Control)

Pump starting, speed, and stopping is controlled by the PLC at the Treatment Plant control panel (CP-100). The PLC modulates the speed of SIC-3102A/B in order to maintain an operator selected flow rate of at least 120 gpm as measured by FIT-3102. Typically the user setpoint flow rate and the extraction well flow will be set to the same values to minimize cycling of these two pumps due to the level switches in TK-110. The level of the tank (TK-110) will fluctuate and when LIT-3101 reaches the low level setpoint (default = 60-inches) it will turn P-112A/B off. When LIC-3100 reaches the high level setpoint (default = 80-inches), P-112A/B will restart to the User Setpoint.

3.3.2.1.3 Remote MANUAL Mode

A JOG button appears in MANUAL mode that allows the operator to run Groundwater Treatment Feed Pump P-112A/B through the PLC so long as the button is "pushed" on the screen. This mode is for verification purposes only and is not intended to be a manual bypass. To manually bypass the automation, the VFD HIM must be used.

3.3.2.1.4 Indications

When the Groundwater Treatment Feed Tank TK-110 level as measured by LIT-3101 drops to 35-inches, a low level alarm will be activated and whichever pump, P112A/B, is operating will shutdown. Pump(s) will be disabled and placed in MANUAL mode and require user intervention to restart.

When the Treated Water Storage Tank TK-116 level as measured by LIT-3107 reaches 90-inches, a high level alarm will be activated and whichever pump, P112A/B, is operating will shutdown. Pump(s) will be disabled and placed in MANUAL mode and require user intervention to restart.

3.3.2.2 Local Controls and Indications

3.3.2.2.1 Controls

The HIM of the VFD allows manual drive operation including a manual drive and fixed speed operation.

3.3.2.2.2 Indications

VFD Controller indications are all contained within the HIM of the VFD Controller.

Flow indicator FIT-3102 will display the instantaneous flow rate for Groundwater Treatment Feed Pump P-112 A and B.

A general alarm strobe is provided at Main Treatment Plant control panel CP-100. This strobe will operate anytime there is an alarm associated with Groundwater Treatment Feed Pump P-112 A/B.

3.3.2.3 Interlocks

Groundwater Treatment Feed Pumps P-112A/B are interlocked to shut down on treatment plant shutdown, low, or low-low level in TK-110, low-low level alarm (LAL-3101 and LAL-3100 respectively). LAL-3100 is driven by LSL-3100 that is mounted at 25” above the bottom of the tank. The pumps will be disabled and placed in Remote MANUAL Mode and require user intervention to restart.

Groundwater Treatment Feed Pumps P-112A/B are interlocked to shut down on high and high-high level in TK-116 (LAH-3107 and LAH-3106 respectively). LAH-3107 is based on a user defined setpoint (default = 90-inches) and a level switch, LSH-3106 (mounted at 100-inches). Pump will be disabled and placed in Remote MANUAL Mode and require user intervention to restart.

Groundwater Treatment Feed Pumps P-112A/B are interlocked to shut down on high pump outlet pressure as indicated by PSH-3102 set at 45 psig . The pumps will be disabled and placed in Remote MANUAL Mode and require user intervention to restart.

Groundwater Treatment Feed Pumps P-112A/B are interlocked to shut down on high carbon vessel pressure from PSH-3105 set at 45 psig. Pump will be disabled and placed in Remote MANUAL Mode and require user intervention to restart.

Groundwater Treatment Feed Pumps P-112A/B are interlocked to shut down on a containment area leak detection alarm (LAH-3121). Pumps will be disabled and placed in Remote MANUAL Mode and require user intervention to restart.

VFD Motor Protective Functions will shut down the associated pump. The operator will be required to reset and restart Groundwater Treatment Feed Pump P-112 A/B manually at the VFD Controller after a VFD Controller protection shutdown.

3.3.3 Treated Water Discharge Pump

The following is a description of the control of Pump P-118 and its associated equipment and instrumentation (TK-116, P-118, FIT-3108). Control is similar to control of P-112 A/B.

3.3.3.1 Remote Controls and Indications

The Treatment Plant main control panel (CP-100) HMI display will be programmed to show Treated Water Discharge Pump P-118 indications and controls including running status, running speed, flow measurement, flow total, and alarms that affect the pump. An Ethernet connection will be provided at main treatment plant control panel CP-100 to allow the operator to attach a laptop control station for programming purposes. In addition, information, alarms, and control functions are available to the operator via the computer touch screen mounted on the front of CP-100.

The local JOG/OFF/AUTO switch HS-3108 exists as a function within the VFD and is accessed by way of the HIM on the VFD. This status indicates to the

PLC that the pump is in AUTO mode. The pump will not start through the HMI unless the local HIM for the VFD is in AUTO.

After power loss and startup, the system will require operator intervention to restart the system. This is to ensure that the plant components are healthy prior to a restart. Restart may be accomplished via the Remote Access System.

3.3.3.1.1 AUTO Mode (Groundwater Flow Control)

Pump starting and stopping is controlled by the PLC at the Treatment Plant control panel (CP-100). The system is set to vary the flow rate by a user settable percentage (default is +/- 6%) as compared to the inflow rate as measured by FIT-3102. The sign of the difference is determined by user-defined Low and High level setpoints of 60- and 80-inches of tank capacity as measured by LIT-3107. The outflow will be varied by modulating the speed of P-118 with SIC-3108. If the level of the tank falls past 60-inches, the outflow will be -6% of the inflow, and P-118 & TK-116 will be in the “Fill” state. If the level of the tank rises above 80-inches, the outflow will be +6% of the inflow, and P-118 and TK-116 will be in the “Drain” state. Maximum flow rate will be 500gpm regardless of the calculated outflow; i.e. if the calculated outflow is >500gpm, the outflow will be set to 500gpm.

3.3.3.1.2 AUTO Mode (User Setpoint Flow Control)

Pump starting, speed, and stopping is controlled by the PLC at the Treatment Plant control panel (CP-100). The PLC modulates the speed of SIC-3108 in order to maintain an operator selected flow rate of at least 120 gpm as measured by FIT-3108. Typically this mode will be used in tandem with User Setpoint Flow Control for the Treatment Pumps P-112A/B to minimize cycling of P-118. The level of the treated water tank (TK-116) will fluctuate and when LIT-3107 reaches the low level setpoint (default = 60-inches) it will turn P-118 off. When LIT-3107 reaches the high level setpoint (default = 80-inches), P-118 will restart to the User Setpoint.

3.3.3.1.3 Remote MANUAL Mode

A JOG button appears in MANUAL mode that allows the operator to run the Treated Water Discharge Pump, P-118 through the PLC so long as the button is "pushed" on the screen

3.3.3.2 Local Controls and Indications

3.3.3.2.1 Controls

The HIM of the VFD allows manual drive operation including a manual drive and fixed speed operation.

3.3.3.2.2 Indications

VFD Controller indications are all contained within the HIM of the VFD Controller.

Flow indicator FIT-3108 will display the instantaneous flow rate for Treated Water Discharge Pump (P-118).

A general alarm strobe is provided at Treatment Plant main control panel (CP-100). This strobe will operate anytime there is an alarm associated with the pump.

3.3.3.3 Interlocks

Treated Water Discharge Pump P-118 is interlocked to shut down on treatment plant shutdown, low, or low-low level in TK-116 (LAL-3107 or LAL-3106 respectively). LAL-3106 is driven by LSL-3106 mounted 25” above the bottom of the tank. The pump will be disabled and placed in Remote MANUAL Mode and require user intervention to restart.

Treated Water Discharge Pump P-118 is interlocked to shut down on high level in the golf course pond LAH-9020. Pump will be disabled and placed in Remote MANUAL Mode and require user intervention to restart.

Treated Water Discharge Pump P-118 is interlocked to shut down on high pump outlet pressure PSH-3108 set at 40 psig. Pump will be disabled and placed in Remote MANUAL Mode and require user intervention to restart.

Treated Water Discharge Pump P-118 is interlocked to shut down on high pressure at the injection wellhead PAH-9013 (When in Injection Mode). Pump will be disabled and placed in Remote MANUAL Mode and require user intervention to restart.

Treated Water Discharge Pump P-118 is interlocked to shut down on high level in the injection well LAH-9010 (When in Injection Mode). Pump will be disabled and placed in Remote MANUAL Mode and require user intervention to restart.

Treated Water Discharge Pump P-118 is interlocked to shut down on a containment area leak detection alarms (LAH-3121 and LAH-3122). Pumps will be disabled and placed in Remote MANUAL Mode and require user intervention to restart.

VFD Motor Protective Functions will shut down the Treated Water Discharge Pump P-118. The operator will be required to reset and restart the pump manually at the VFD Controller after a VFD Controller protection shutdown.

3.3.4 Air Compressor (C-120)

C-120 is a manually operated compressor that is used during carbon changeouts. The air compressor is controlled by hand switch HS-3120 for on/off operation during carbon transfers.

3.3.5 Sump Pump (P-111)

Pump P-111 is a self-contained float-operated sump pump that is used to pump water from the treatment building containment into the Groundwater Treatment Feed Tank or into drums for disposal. The sump pump is controlled by a float switch attached to the pump. When the level of water in the building containment is high enough to trip the float switch, the pump turns on and moves water to the desired location.

3.3.6 Dust Control (FCV-3120)

FCV-3120 and FCV-3121 are two motor operated flow control valves that are used to divert water to a hose-bib for use by the dust control truck operators to fill their trucks with treated water.

3.3.6.1 Remote Controls and Indications

The valves shall be operable from a keypad outside of the building, HS-3120. The operator will require a code to initiate flow diversion from the infiltration gallery to the hose-bib. Once the code is properly entered, the PLC will initiate the commands needed to fully open FCV-3121 and partially close FCV-3120. This will divert some of the treated water to the hose-bib. FCV-3120 must be partially closed to provide enough backpressure to send water to the hose bib. The position setting for closing this valve is settable by the operator and was initially set at 85% open. This setting can be adjusted to provide whatever flow rate is desired to the hose bib.

Once initiated, the system will start a timer for 30 minutes of operation. After 30 minutes of operation, FCV-3122 will close and FCV-3120 will fully open and direct full flow back to the discharge (injection well or golf course). At any point during the process, the operator may restart the timer at the panel. Also, at any point during the process, the operator may end the flow to the hose-bib.

3.3.6.2 Local Controls and Indications

The valve shall have the capability of being manually operated if desired by plant operators by way of the valve handle. In order to ensure that an external operator does not override the manual operation, the operator may disable the Dust Control function at the HMI.

3.3.6.3 Interlocks

A high level in the truck bay sump, LAH-3121 will shut FCV-3121 and open FCV-3120 to redirect flow away from the hose bib.

3.4 KAFB-106233 AND KAFB-106234 CONTROL DESCRIPTION

The following is a control description for the two extraction wells KAFB-106233 and KAFB-106234 and the associated equipment and instrumentation.

3.4.1 Wellhead Vault, Air Release Vault, and Well Control House Interlocks and Alarms

Level Switch LSH-4001: This leak detection switch is located in the pipeline secondary containment in the wellhead vault for KAFB-106233 and provides a contact back to the PLC. Normal and alarm status is displayed on the HMI screen. A high level in the interstitial space will activate LSH-4001 interlock and will disable all well pumps, P-101, P-102 and P-103, initiate a remote alarm LAH-4001, and notify the operators of a leak in the containment. Operator intervention shall be required to restart the well pumps.

Well Pump P-102 is interlocked to shut down on a low well water level alarm (LAL-4001) generated by the PLC via the signal from LIT-4001. Pump will be disabled and placed in Remote MANUAL Mode and require user intervention to restart.

Level Switch LSH-4002: The leak detection switch is located in the wellhead vault for KAFB-106233 and provides a dry contact back to the PLC. Normal and alarm status is displayed on the HMI screen. A high level in the wellhead vault will activate LSH-4002 interlock and will disable all 3 well pumps, initiate a remote alarm LAH-4002, and notify the operators of a leak in the wellhead vault. Operator intervention shall be required to restart the pumps.

Level Switch LSH-5001: This leak detection switch is located in the pipeline secondary containment in the wellhead vault for KAFB-106234 and provides a contact back to the PLC. Normal and alarm status is displayed on the HMI screen. A high level in the interstitial space will activate LSH-5001 interlock and will disable the three well pumps, initiate a remote alarm LAH-5001, and notify the operators of a leak in the containment. Operator intervention shall be required to restart the well pumps.

Well Pump P-103 is interlocked to shut down on a low well water level alarm (LAL-5001) generated by the PLC via the signal from LIT-5001. Pump will be disabled and placed in Remote MANUAL Mode and require user intervention to restart.

Level Switch LSH-5002: The leak detection switch is located in the wellhead vault for KAFB-106234 and provides a dry contact back to the PLC. Normal and alarm status is displayed on the HMI screen. A high level in the wellhead vault will activate LSH-5002 interlock and will disable all well pumps, initiate a remote alarm LAH-5002, and notify the operators of a leak in the wellhead vault. Operator intervention shall be required to restart the well pumps.

Level Switch LSH-6001: The leak detection switch is located in the air release vault and provides a dry contact back to the PLC. Normal and alarm status is displayed on the HMI screen. A high level in the air release vault will activate LSH-6001 interlock and will disable P-101, P-102 and P-103, initiate a remote alarm LAH-6001, and notify the operators of a leak in the system at the air release vault. Operator intervention shall be required to restart the well pumps.

Level Switch LSH-7001: The leak detection switch is located in the Well Control House and provides a dry contact back to the PLC. Normal and alarm status is displayed on the HMI screen. A high level in the Well Control House will activate LSH-7001 interlock and will disable P-101, P-102 and P-103, initiate a remote alarm LAH-7001, and notify the operators of a leak in the system at the Well Control House. Operator intervention shall be required to restart the well pumps.

Level Switch LSH-7005: This leak detection switch is located in the pipeline secondary containment in the Well Control House and provides a contact back to the PLC. Normal and alarm status is displayed on the HMI screen. A high level in the interstitial space will activate LSH-7005 interlock and will disable P-101, P-102 and P-103, initiate a remote alarm LAH-7005, and notify the operators of a leak in the containment at the Well Control House. Operator intervention shall be required to restart the well pumps.

Level Switch LSH-8001: The leak detection switch is located in the air release valve vault for air release valve ARV-8001 and provides a dry contact back to the PLC. Normal and alarm status is displayed on the HMI

screen. A high level in the Well Control House will activate LSH-7001 interlock and will disable P-101, P-102 and P-103, initiate a remote alarm LAH-7001, and notify the operators of a leak in the system at the Well Control House. Operator intervention shall be required to restart the well pumps.

3.4.2 KAFB-106233 and KAFB-106234 Controls and Interlocks

The following control description applies to Extraction Wells (KAFB-106233 and KAFB-106234) with Well Pumps P-102 and P-103 respectively, Flow Control Valves FCV-7001 and FCV-7002 respectively, and Flow Transmitters FIT-7001 and FIT-7002 respectively.

3.4.2.1 Remote Controls and Indications

The Treatment Plant Main Control Panel (CP-100) HMI display is programmed to show extraction well system indications and controls including pump running status, flow measurement, flow total, and alarms. Well Pump HMI controls include AUTO/MANUAL selection and a JOG PUMP button for use during Remote MANUAL operation. For normal operation, the local HAND/OFF/AUTO switches HS-4001 and HS-5001 at the Well Control House panel will indicate to the HMI that Well Pumps P-102 and P-103 respectively are in AUTO mode. The well pump will not start through the HMI unless the local switch is in AUTO. The default selection for starting mode after power loss and power-up is to automatically restart Well Pumps P-102 and P-103 if they are in AUTO mode.

Modes Available:

Remote AUTO Mode
Remote MANUAL Mode

3.4.2.1.1 Remote AUTO Mode

Pump starting and stopping is controlled by the PLC at the Treatment Plant Control Panel (CP-100). Pump tests will be conducted on the extraction wells, KAFB-106233 and KAFB-106234, to determine the target groundwater extraction rates for the wells. On initial start up the pumps are turned on from the PLC and set to the desired groundwater extraction rate by using ZIC-7001 (KAFB-106233) and ZIC-7002 (KAFB-106234) to manually adjust the position signal to the control valves FCV-7001 and FCV-7002 respectively. The operator will monitor groundwater flow as measured by FI-7001 and FI-7002 and adjust ZIC-7001 and ZIC-7002 to obtain the target groundwater extraction rates for the two wells.

The PLC will monitor the groundwater level in the extraction wells (LI-4001 and LI-5001). LAL-4001 and LAL-5001 are low level alarm setpoints in well KAFB-106233 and KAFB-106234 respectively. The alarm is set to 20 feet of water above the level transducers, but is operator settable should conditions determine that a different value should be used. These low level alarms will shutdown the groundwater pumps, P-102 and P-103 and will reset when water level recovers to within 5 feet of the normal static water level; each well has an operator settable level setpoint for defining individually what this level should be (default is 35 ft for KAFB-106233 and 40 ft for KAFB-106234).

3.4.2.1.2 Remote MANUAL Mode

A JOG button appears in MANUAL mode that allows the operator to run Well Pump P-102 and P-103 through the PLC so long as the button is "pushed" on the screen.

3.4.2.2 Local Controls and Indications

3.4.2.2.1 Controls

Controls include HAND/OFF/AUTO HS-4001 and HS-5001 selection switch on the wellhead motor starter panels MS-102 and MS-103 respectively. If the user toggles HAND, the pump shall start and run. The pump will continue to run as long as the switch is in HAND.

3.4.2.2.2 Indications

Indicator lights include a green running light and a red stop light HL-4001 and HL-5001 on motor starter panels MS-102 and MS-103 respectively.

Flow indicator FIT-4001 will display instantaneous groundwater flow rate for Well KAFB-106233. Flow indicator FIT-5001 will display instantaneous groundwater flow rate for Well KAFB-106234.

PI-4001 will show pressure in the groundwater pipeline at the top of the wellhead for KAFB-106233. PI-5001 will show pressure in the groundwater pipeline at the top of the wellhead for KAFB-106234.

PI-7001 will show pressure in the interstitial space between the inner and outer pipe of the double-wall pipeline at Well Control House for output from KAFB-106233. An increase in this pressure indicates that there may be a leak in the inner pipe. PI-7002 will show pressure in the interstitial space between the inner and outer pipe of the double-wall groundwater pipeline at Well Control House for output from KAFB-106234.

PI-7003 will show pressure in the groundwater pipeline at Well Control House for output from KAFB-106233. PI-7004 will show pressure in the groundwater pipeline at Well Control House for output from KAFB-106234.

PI-7005 will show pressure in the groundwater pipeline at the Well Control House for the combined output from KAFB-106233 and KAFB-106234.

3.4.2.2.3 Interlocks

Well Pump P-102 is interlocked to shut down on Groundwater Treatment Feed Tank TK-110 high-high level alarm LAH-3100 at the Main Treatment Plant. The pump will be disabled and placed in Remote MANUAL Mode and require user intervention to restart.

Well Pump P-102 is interlocked to shutdown on a containment area leak associated with any of the three extraction wells. This includes leak detection alarms in the well and valve vaults and the containment on the double wall pipelines (LAH-3000, 3002, 3003, 3004, 4001, 4002, 6001, 7001, 7005, or LAH-8001). Pump will be disabled and placed in Remote MANUAL Mode and require user intervention to restart.

Well Pump P-102 is interlocked to shutdown on treatment plant shutdown.

Well Pump P-102 is interlocked to shut down on a low well water level alarm (LAL-4001) generated by the PLC via the signal from LIT-4001. Pump will be disabled and placed in Remote MANUAL Mode and require user intervention to restart.

Overload protection OL-4001 will shut the pump down. The operator will be required to reset OL-4001 manually at starter MS-102 to restart Well Pump P-102 after an overload protection shutdown.

Well Pump P-103 is interlocked to shut down on Groundwater Treatment Feed Tank TK-110 high-high level alarm LAH-3100 at the Main Treatment Plant. The pump will be disabled and placed in Remote MANUAL Mode and require user intervention to restart.

Well Pump P-103 is interlocked to shutdown on a containment area leak associated with any of the three extraction wells. This includes leak detection alarms in the well and valve vaults and the containment on the double wall pipelines (LAH-3000, 3002, 3003, 3004, 4001, 4002, 6001, 7001, 7005, or LAH-8001). Pump will be disabled and placed in Remote MANUAL Mode and require user intervention to restart.

Well Pump P-103 is interlocked to shutdown on treatment plant shutdown.

Well Pump P-103 is interlocked to shut down on a low well water level alarm (LAL-5001) generated by the PLC via the signal from LIT-5001. Pump will be disabled and placed in Remote MANUAL Mode and require user intervention to restart.

Overload protection OL-5001 will shut the pump down. The operator will be required to reset OL-5001 manually at starter MS-103 to restart Well Pump P-103 after an overload protection shutdown.

3.5 INJECTION WELL AND POND LEVEL CONTROL DESCRIPTION

The following is a description of the control system for the Injection Well and Pond Level.

3.5.1 Injection Well and Pond Level Interlocks and Alarms

The interlocks and alarms associated with the Injection Well and Pond Level have effects on the operation of the GWT System.

Injection Well Water Level is monitored by LIT-9010. If the level rises to more than 50 ft above normal operating levels as determined during system startup (set at 32ft above LIT-9010), LAH-9010 will trigger and the treatment system will shutdown.

Injection Well Head Pressure is monitored by PIT-9013. If the pressure at the wellhead rises above 50 psig, alarm PAH-9013 will trigger and the treatment system will shutdown. If the pressure falls below 5 psig for fifteen minutes or more, alarm PAL-9013 will trigger. The setpoints for these alarms as well as the times associated with the alarm trigger are settable by the operator on the HMI.

Main Pond Water Level is monitored by LIT-9020. If the level rises to 1 foot below the maximum level as defined by Tijeras Arroyo Golf Course personnel

(Set at 3.3 ft), LAHH-9020 will trigger and the treatment system will shutdown. This level setpoint is operator settable on the HMI.

3.5.2 Injection Well Control Valve Control Description

The injection well at KAFB-7 will contain a V-Smart Control Valve that regulates flow into the aquifer. The V-Smart Control Valve is accompanied by a hydraulic pump and two solenoid valves that control how open the valve is. These components come as part of a control panel. This panel has a HAND/OFF/AUTO switch (HS-9014), Start Button (HS-9015), Open Button (HS-9016), and Close Button (HS-9017). In addition, there are provisions for remote control of the system.

3.5.2.1 V-Smart Control Valve Manual Control

When the operator has selected HAND on HS-9014, the operator will be allowed to start the hydraulic pump with HS-9013 and adjust the aperture with the Open and Close solenoid valves HS-9016 and HS-9017 respectively.

3.5.2.2 V-Smart Control Valve Automatic Control

When the operator has selected AUTO on HS-9014, the PLC will be programmed to allow remote manual operation and fully automatic operation. When the operator selects Injection Mode, the PLC will enter into Remote MANUAL Injection Mode. In addition, the operator can select to enter Remote AUTOMATIC Mode while in Injection Mode.

When entering Injection Mode, the hydraulic pump P-9014 will be turned on so that control of the valve aperture will be possible. P-9014 will remain on until the exit sequence is performed (described below).

The operator will need to be cautious when entering or exiting Injection Mode, because the valve system at the Junction of the GWTS discharge pipeline and the existing pipeline connecting KAFB-7 and the Golf Course Main Pond is not automated. Therefore, the operator must ensure the valving is correct prior to changing modes.

These modes are described below.

3.5.2.2.1 Remote MANUAL Operation

When the user has selected Manual operation of the V-Smart control valve at the HMI in the main treatment system control room and the HAND/OFF/AUTO Switch HS-9014 is in the AUTO position, the PLC will allow the user to continuously open or close the control valve.

There will be an OPEN button on the HMI that toggles an output on the Well 7 control panel’s remote I/O rack. This output will be a dry contact, wetted by the hydraulic control panel of the V-Smart Control Valve. As long as the operator is “pushing” the open button on the HMI, the dry contact will remain closed. As soon as the operator lifts their finger, the dry contact will open.

Similarly, a CLOSE button on the HMI will cause the V-Smart Control Valve to close continuously.

3.5.2.2.2 Fully Automatic Operation

When the user has selected Automatic operation of the V-Smart Control Valve at the HMI in the main treatment system control room and the HAND/OFF/AUTO Switch HS-9014 is in the AUTO position, the PLC will control the aperture of the control valve automatically. This control will be achieved utilizing feedback from the effluent flow transmitter FIT-3102 in the treatment building, and the injection wellhead pressure transmitter PIT-9013.

The system will control pressure at the wellhead ensuring that it stays within two user settable values. The system is set to maintain pressure between 8 and 12 psi.

The Automatic Control algorithm will pulse the Open and Close solenoid valves for a user settable duration when the pressure is too great or too low respectively. After the pulse timer has expired, the algorithm will wait until a user settable OFF timer has expired before acting on pressure again. The system is set to pulse Open or Close for 0.8 seconds and wait for 2 seconds. If the pressure is still out of bounds after the 2 seconds has passed, the system will pulse in the direction needed again.

3.5.2.2.3 P-118 Control in Injection Modes

P-118 will be controlled in the same way as when Golf Course Mode is selected. I.e. the pump will be in User Setpoint Flow Control or Remote AUTOMATIC Mode as described previously in this document.

3.5.2.2.4 Transitions between Remote MANUAL and Remote AUTO Modes

The operator may switch to Remote MANUAL or Remote AUTO Mode from the other Remote mode at any time. Switching to Remote MANUAL Mode from Remote AUTO Mode results in the PLC ceasing to control the Open and Close solenoid valves by the automated means described above, and waits for the operator to push Open or Close to take whichever action is requested.

Similarly, when the operator switches to Remote AUTO Mode from Remote MANUAL Mode, the PLC will cease to listen to the HMI Open and Close commands. Instead, the PLC will control the solenoid valves by the automated means described above.

3.5.2.2.5 Exiting Injection Mode

At any time, the operator may elect to exit Injection Mode by selecting Golf Course Mode. When this occurs, the system will perform an exit sequence to ensure that the Well does not empty.

The valve Close command will be held for a user settable period of time (default = 60 seconds). After that timer has expired, the hydraulic pump P-9014 will be shut off.

In addition, any condition that would cause P-118 to shutdown will cause the exit sequence to occur. The exit sequence will also be performed when a Pressure or Well Level Alarm occurs. In these cases, however, Injection Mode will not be exited. Instead the system will enter Remote MANUAL Injection Mode after the exit sequence has occurred. If the operator wishes to begin injection again, the operator will need to restart P-9014. This will be possible via a Start pushbutton on the HMI screen.

3.6 COMMUNICATIONS SYSTEM

The main PLC at the Treatment Plant shall communicate with offsite personnel via a licensed wireless cellular data system. See Section 3.8 of this Document. Alarms to notify the operator will be sent by email or text message through control system internet connection or through a dedicated cellular telemanager. Remote Alarms are indicated in the table below:

Alarm Signal	Remote Alarm Message
All other equipment shutdowns	"General Shutdown Alarm"
ZA-3123	"Intrusion Alarm"
ZA-3124	"Intrusion Alarm"
ZA-3125	"Intrusion Alarm"
ZA-3126	"Intrusion Alarm"
TAL-3127	"Low Temperature Alarm Main Plant"
BAH-3128	"Smoke Alarm"
LAH-3000	"Well KAFB-106228 Leak Alarm”
LAH-3002	“Well KAFB-106228 Pipeline Leak”
LAH-3003	“Well KAFB-106228 ARV Pipeline Leak”
EAL-3129	“Power Loss Main Plant”
EAL-3010	“Power Loss KAFB-106228”
EAL-7001	“Power Loss Well Control House”
EAL-3121	“Leak Detection Main Plant”
EAL-3122	“Leak Detection Main Plant”
LAH-4001	“Well KAFV-106233 Pipeline Leak”
LAH-4002	“Well KAFB-106233 Leak Alarm”
LAH-5001	“Well KAFB-106234 Pipeline Leak”
LAH-5002	“Well KAFB-106234 Leak Alarm”
LAH-6001	“Well KAFB-106233,4 ARV Leak”
LAH-7001	“Well Control House ARV Leak”
LAH-7005	“Well Control House Leak Alarm”

3.7 HISTORICAL DATA AND USER INTERFACE SCREENS

3.7.1 General Requirements

Operator interface screens shall be designed for intuitive operation and ease of operation and shall be laid out in a logical and orderly fashion. Graphics shall be provided to illustrate the systems and show the status of all motor driven equipment and automated valves. All MODES information and selections shall be readily accessible. All process and alarms information and operator adjustable parameters shall be readily accessible for operator review and modification.

All I/O, process, and building variables shall be displayed on the operator interface screens.

All I/O point warning and alarm (trip levels and delay times) settings shall be user-selectable at the operator interface.

All motors and control loops shall be capable of operating in both manual and automatic mode through the operator interface. All PID factors shall be accessible through the operator interface.

Preliminary operator interface screens shall be submitted for approval of overall design and methodology.

3.7.2 Historical Data

The following data shall be stored in non-volatile data storage utilizing a CompactFlash card installed in the PLC. All data must be stored for at least 3 months. Operators must be able to download data to be modified in external spreadsheet software.

Data [unit]	**Period**
Variable Frequency Drives	
Run-Time [hrs]	5 minutes
Fixed Speed Motors	
Run-Time [hrs]	5 minutes
Well Level Transmitters	
Level [ft]	5 minutes
Tank Level Transmitters	
Level [% Full]	5 minutes
Flow Transmitters	
Flow [gpm]	5 minutes
Totalized value [100 gals] (Defined as total volume pumped by P-118)	5 minutes
Plant	
Run-Time [hrs] (Defined as time with a positive flow out of TK-110)	1 hr
KAFB-7	
Well Head Pressure [psi]	1 minutes
Logs	
Event Log (Shall be stored on Non-Volatile Data Storage)	N/A
Alarm Log (Shall be stored on Non-Volatile Data Storage)	N/A

3.7.3 Operator Interface Screens

[Screens can be found in Appendix G]

3.8 INTERNET BASED MONITORING

Software: Able to be browsed and viewed using Internet Explorer.

Security: Uses password-based security to allow viewing. Up to 5 users may be logged on at any one time.

Scope: All process variables, process states, alarms, and historical trending are viewable through the Explorer screens.

Control: Full Remote Control of the system is possible after proper login has occurred. Only one remote controller is allowed at a given time.

Alarming: Any alarm notifications to remote operators will be performed over a cellular network and transmitted via email. Provide for at least six email recipients. Provide capability to add and remove recipients.

3.9 IDENTIFICATION

HMI equipment and instrumentation tags shall be based on the instrument and equipment tags on the P&ID.

3.10 FIELD QUALITY CONTROL

3.10.1 Testing

A qualified systems integrator shall perform the following system testsprior to startup service. The program will be considered defective if it does not pass tests and inspections. Test and Inspection reports shall be prepared.

Tests to be performed

Loop Check

Verify all process signal ranges from instrument back to HMI screens.

Status Indication Function Check
Alarm Limit Check
Alarm Logging and Acknowledging Check
Trending and Visualization Check
Remote Alarm Notification Check

3.11 START UP SERVICE

Start Up Service shall include the tuning of feedback control loops, functional verification of entire system, and a system-wide balance.

3.12 SOFTWARE SERVICE AGREEMENT

Beginning at Substantial Completion, service agreement shall include software support for five years. All software licenses (including programming software, shall be provided to CB&I.

-- End of Section --

APPENDIX G

Human Machine Interface Screens

THIS PAGE INTENTIONALLY LEFT BLANK

Kirtland Air Force Base
Bulk Fuels Facility

Ground Water Treatment System

OverView

35 - OVERVIEW

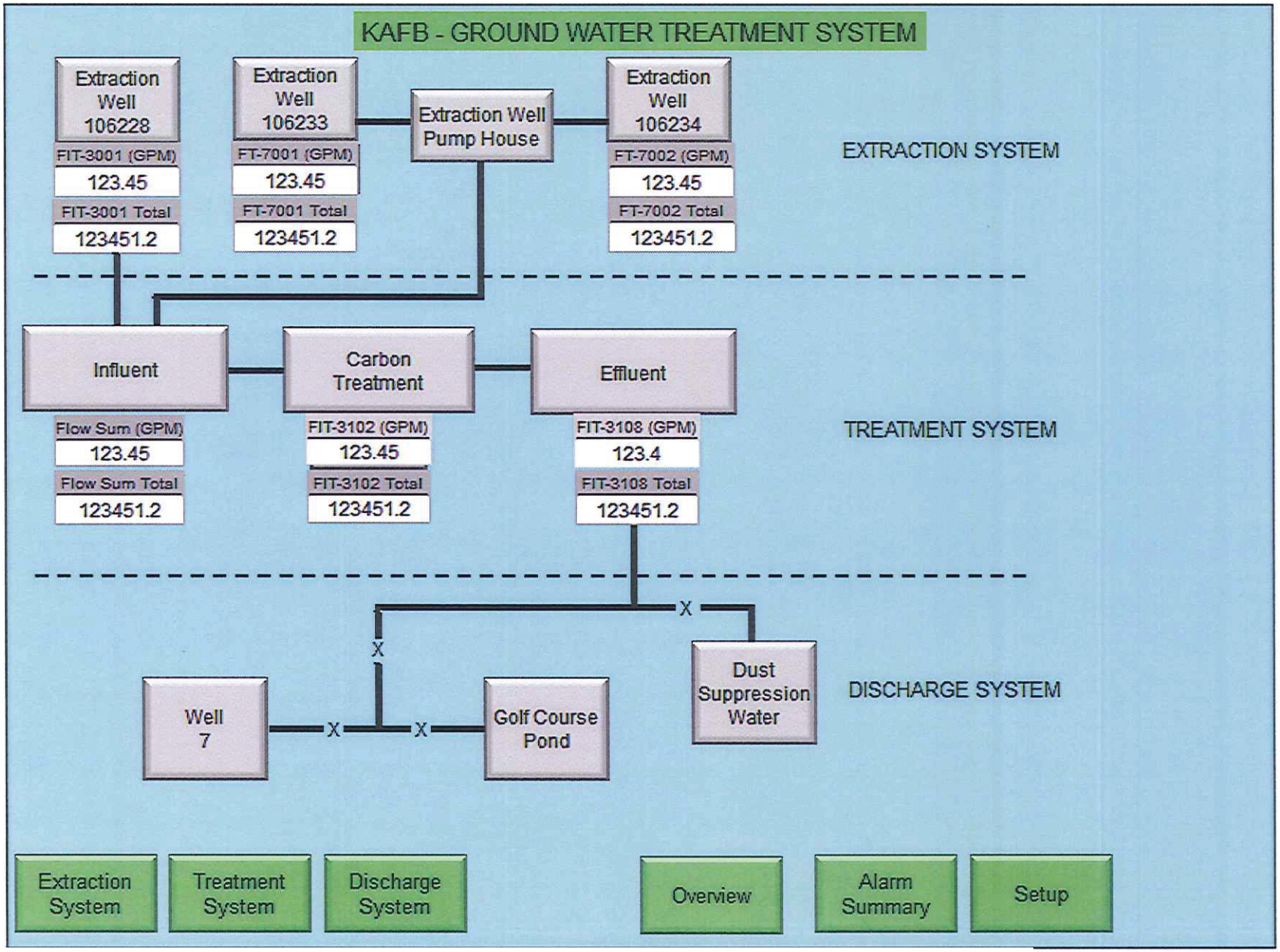
KAFB - GROUND WATER TREATMENT SYSTEM
Extraction Well 106228
FIT-3001 (GPM)
123.45
FIT-3001 Total
123451.2
Extraction Well 106233
FT-7001 (GPM)
123.45
FT-7001 Total
123451.2
Extraction Well Pump House
Extraction Well 106234
FT-7002 (GPM)
123.45
FT-7002 Total
123451.2
EXTRACTION SYSTEM
Influent
Flow Sum (GPM)
123.45
Flow Sum Total
123451.2
Carbon Treatment
FIT-3102 (GPM)
123.45
FIT-3102 Total
123451.2
Effluent
FIT-3108 (GPM)
123.4
FIT-3108 Total
123451.2
TREATMENT SYSTEM
X
X
Well 7
X
X
Golf Course Pond
Dust Suppression Water
DISCHARGE SYSTEM
Extraction System
Treatment System
Discharge System
Overview
Alarm Summary
Setup

29 - New Extraction System

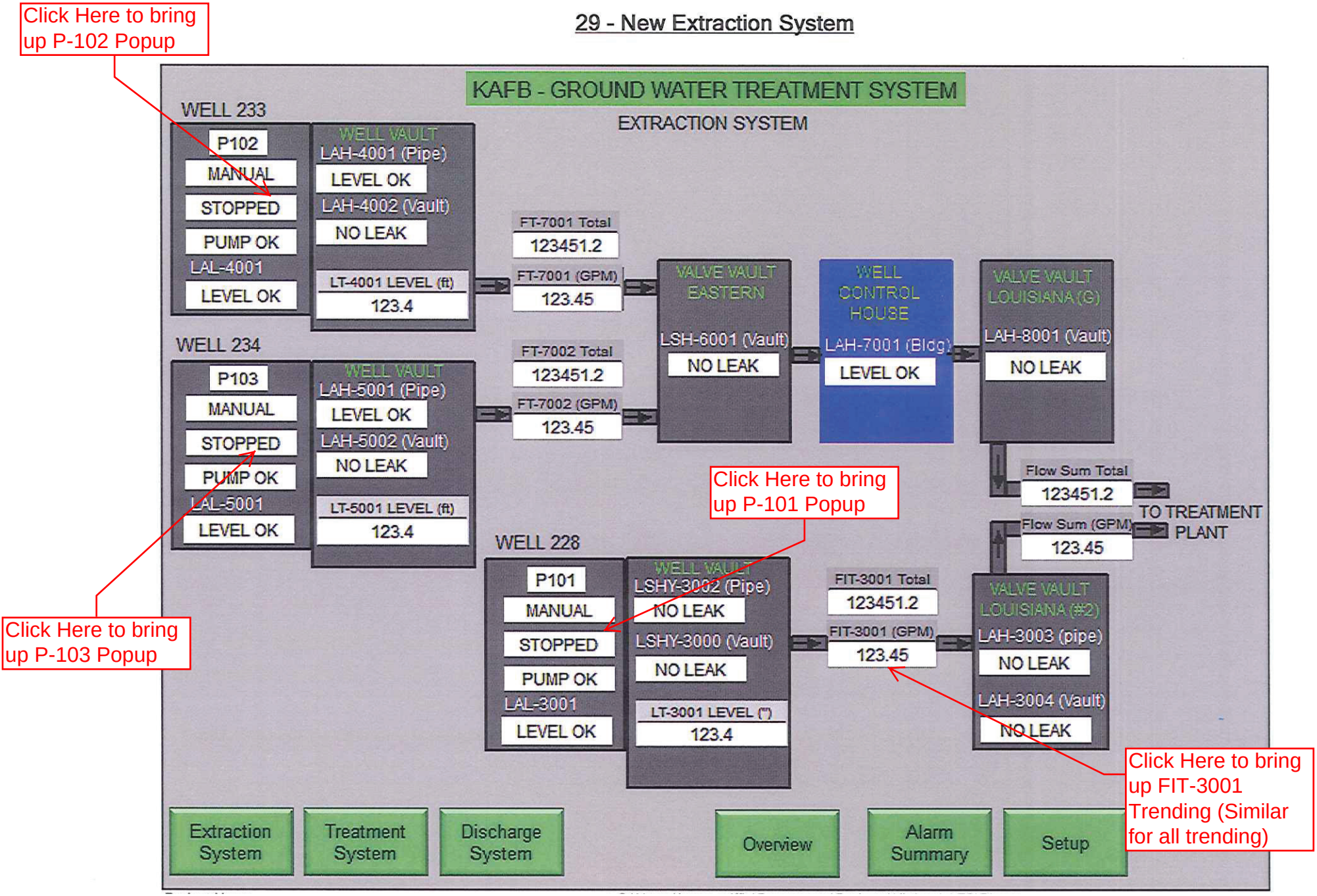

10 - P101 POPUP

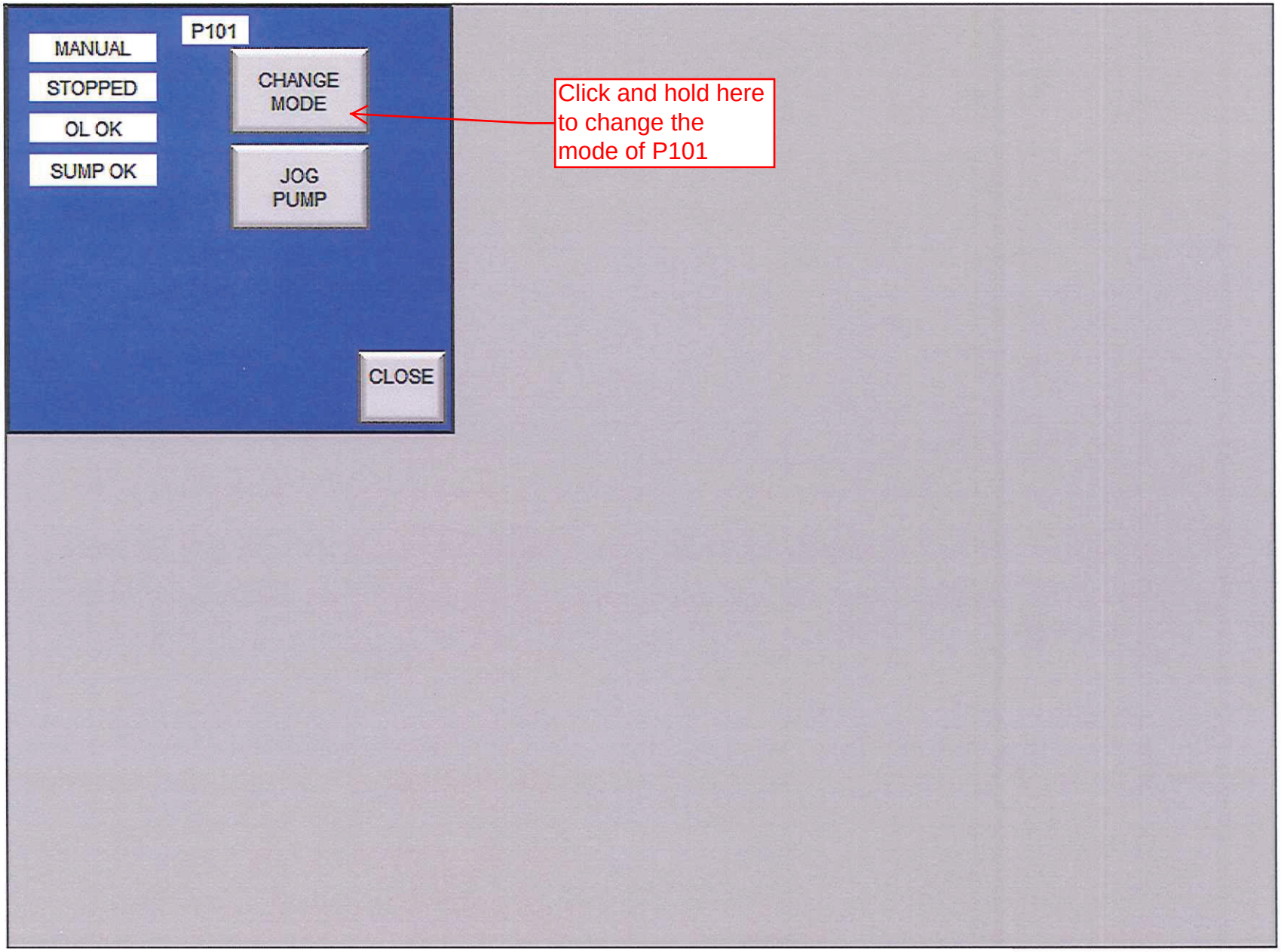

19 - P102 POPUP

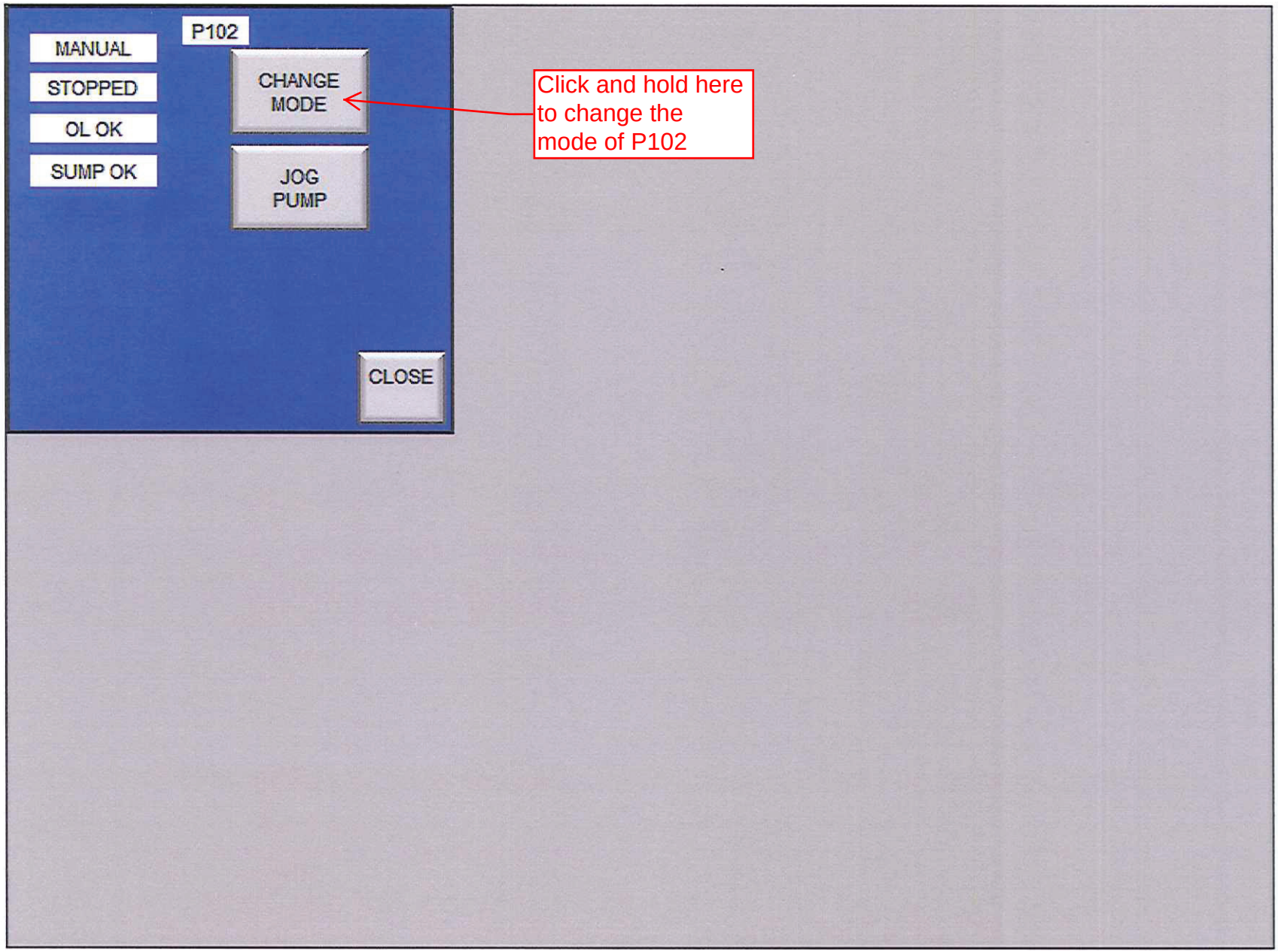

20 - P103 POPUP

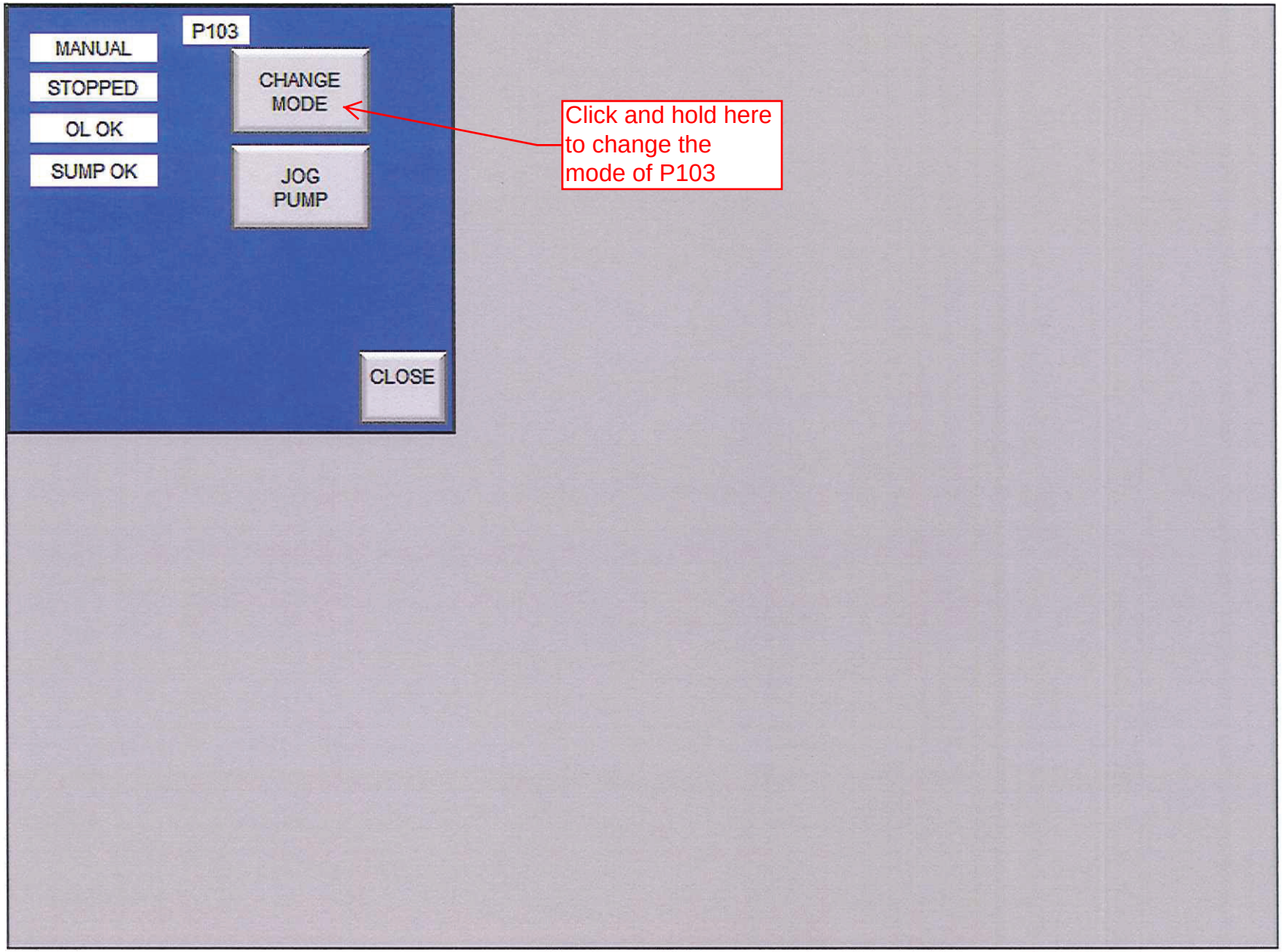

34 - NEW TREATMENT

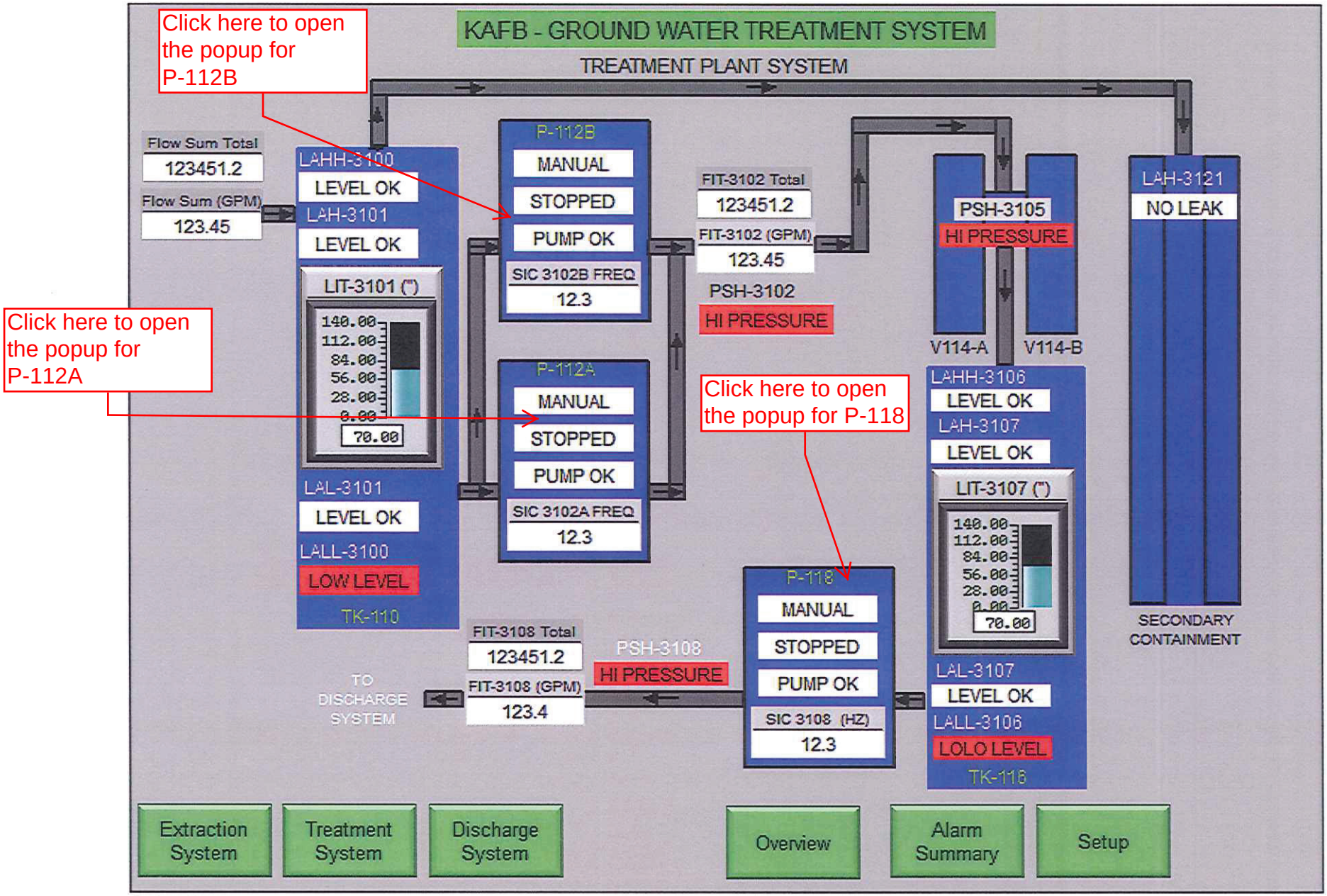

6 - P112A POPUP

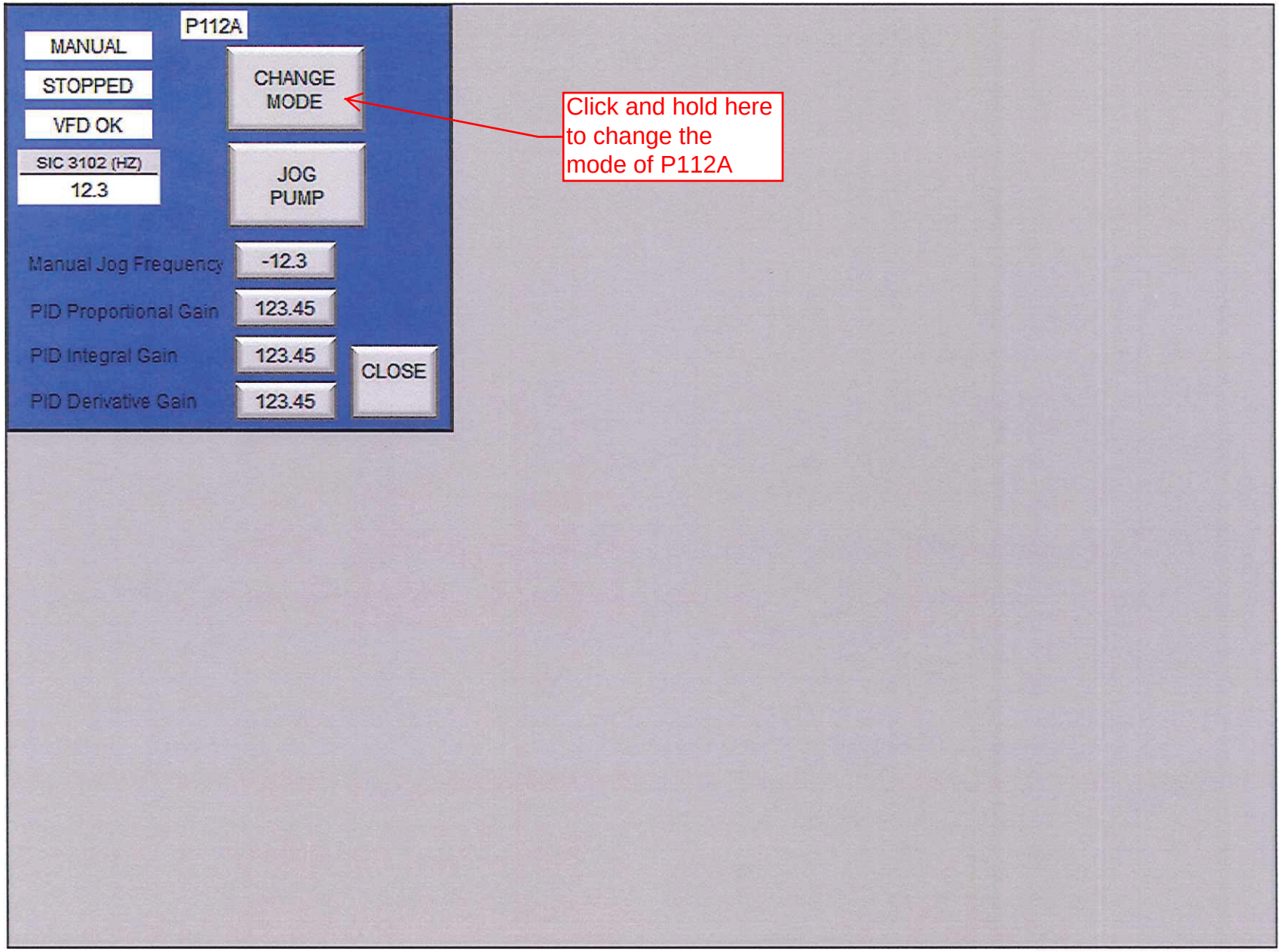

7 - P112B POPUP

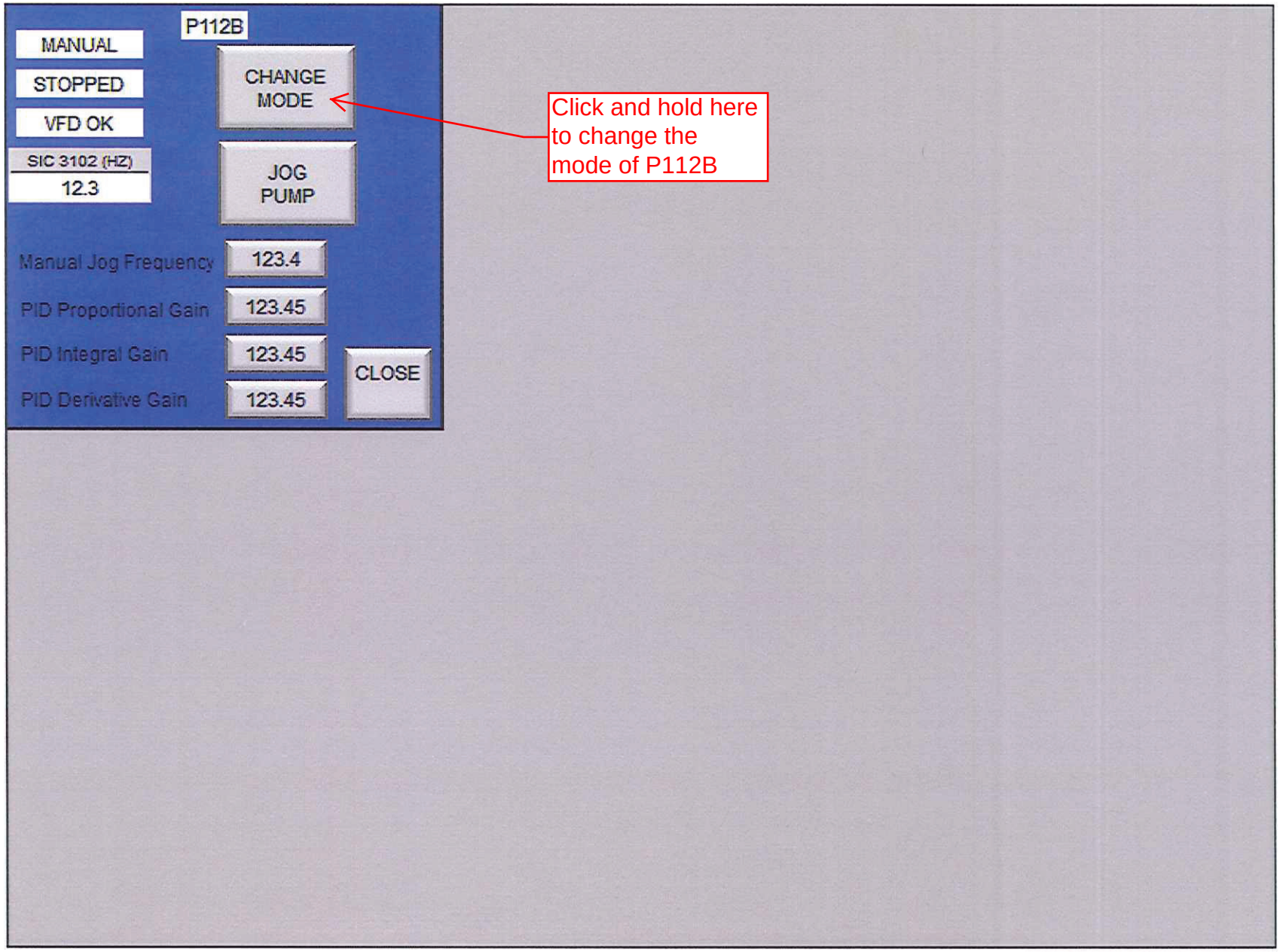

5 - P118 POPUP

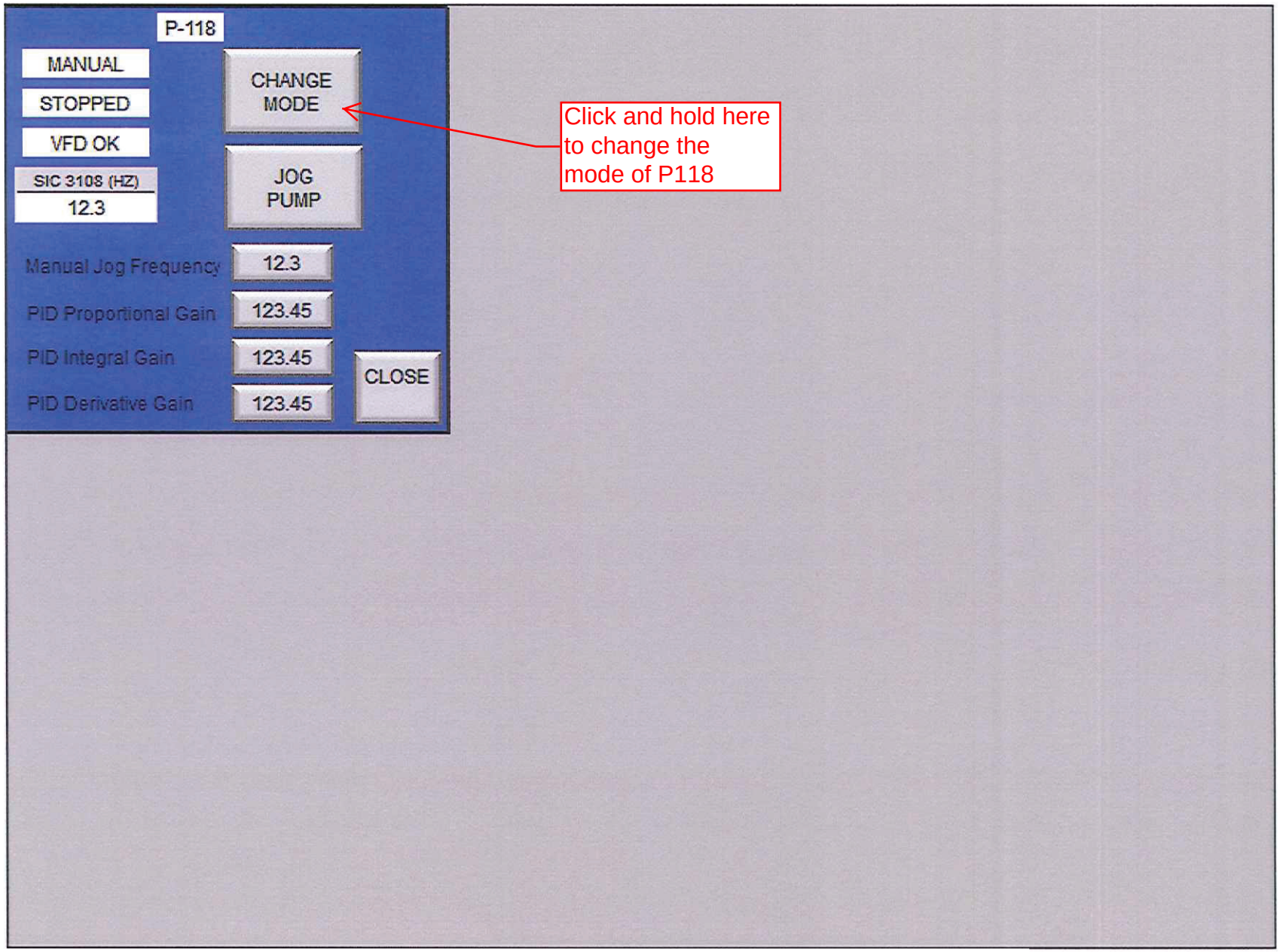
P-118
MANUAL
STOPPED
VFD OK
SIC 3108 (HZ)
12.3
CHANGE MODE
JOG PUMP
Manual Jog Frequency
12.3
PID Proportional Gain
123.45
PID Integral Gain
123.45
PID Derivative Gain
123.45
CLOSE
Click and hold here to change the mode of P118

24 - Well7_Pond

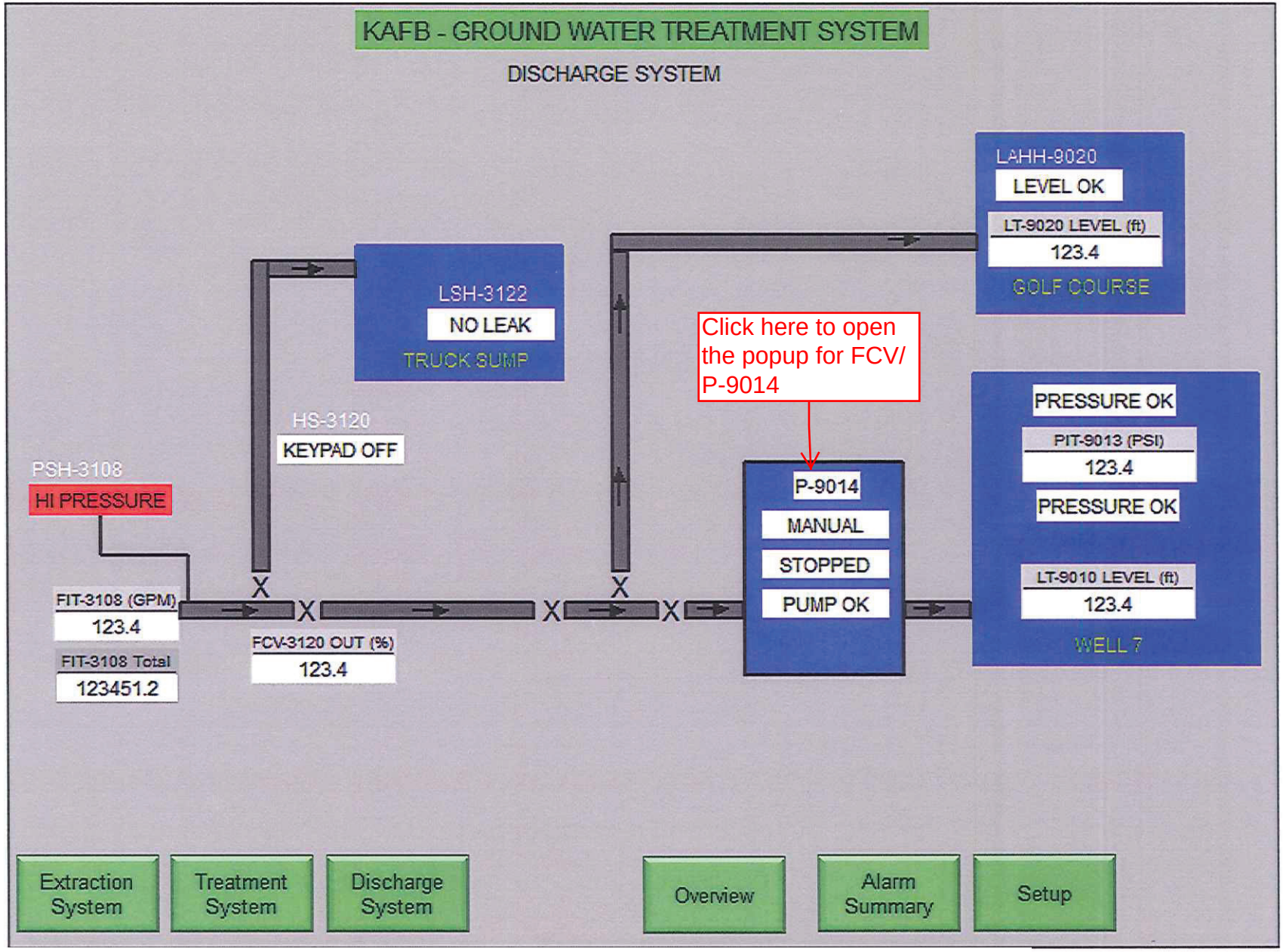

28 - P9014 POPUP

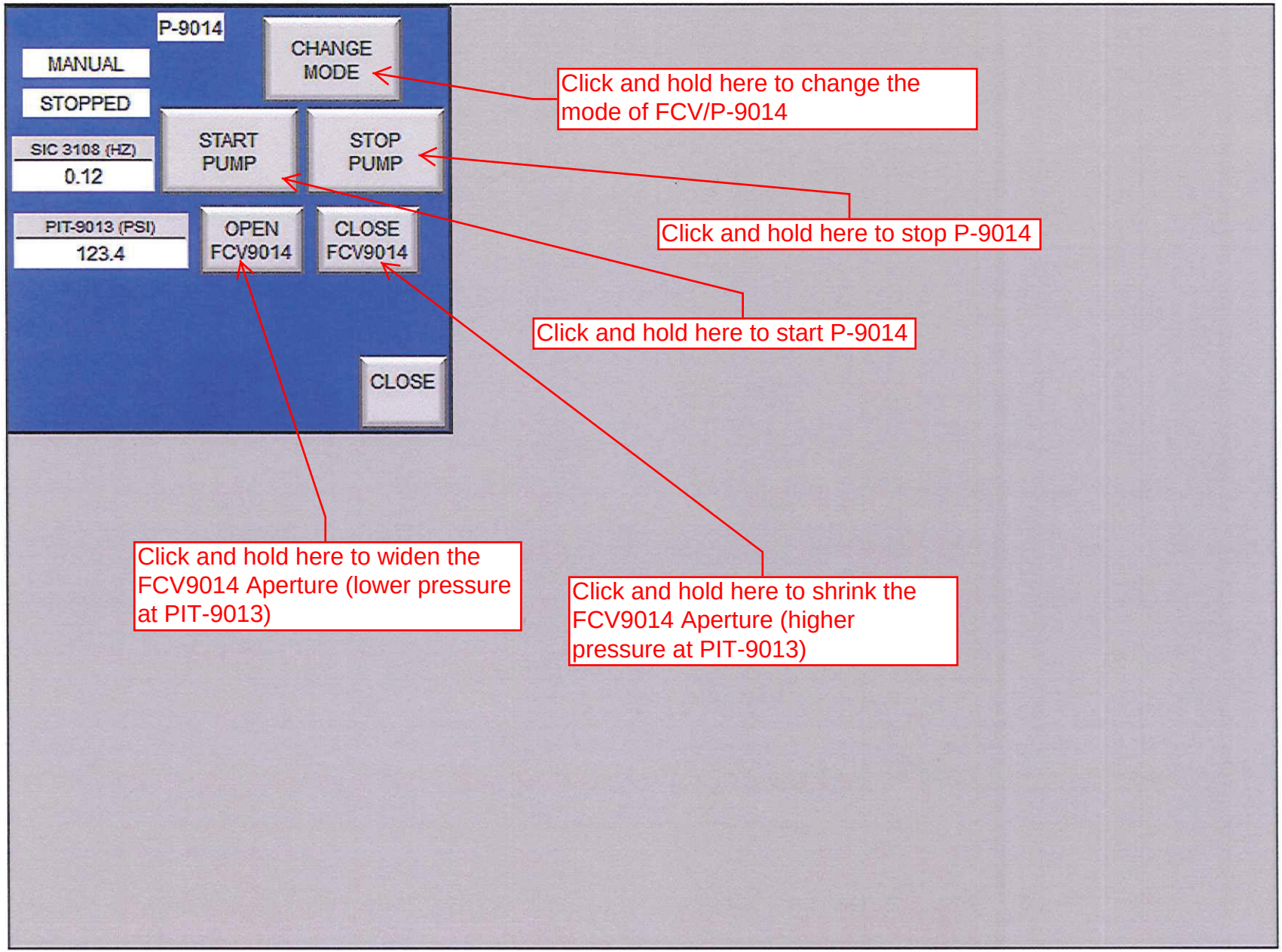

4 - Setup

Scaling for Input card/transducers - rarely will need to change

Low-Low Alarm Level

KAFB - GROUND WATER TREATMENT SYSTEM

ANALOG INPUT SCALING

FIT 3001 EU Min (GPM)	123.45
FIT 3001 EU Max (GPM)	123.45
LT 3001 EU Min (FT)	123.45
LT 3001 EU Max (FT)	123.45
LIT 3101 EU Min (")	123.45
LIT 3101 EU Max (")	123.45
FIT 3102 EU Min (GPM)	123.45
FIT 3102 EU Max (GPM)	123.45
LIT 3107 EU Min (")	123.45
[illegible]	123.45
FIT 3108 EU Min (GPM)	123.45
[illegible]108 EU Max (GPM)	123.45

WELL 106228 CONTROL

Well Hi Level Setpt (FT)	123.45
Well :Lo Level Setpt (FT)	123.45
Pump Restart (min.)	-12345
Flow Control Setpt (%)	12.34

WELL 106228 WELL CONTROL, CONT.

LoLo Level Setpoint (FT)	123.45

P112A/B CONTROL MODE

AFC Fill Level setpt (GPM)	123.45
AFC Drain Level Setpt (GPM)	123.45
User Setpt Mode Flow (GPM)	123.45

USER SETPOINT CONTROL | AUTO LEVEL CONTROL

Fill/Drain Trigger Levels

TK110 LoLev Setpt (")	123.45
TK-110 Hi Lev Setpt (")	123.45

P118 CONTROL MODE SETPOINTS

AFC Fill Inflow Setpt (GPM)	123.45
AFC Drain Inflow Setpt (GPM)	123.45
TK-116 Hi Level Setpt (")	123.45
TK-116 Lo Level Setpt (")	123.45
Pump Flow Setpt Offset	0.12

P118 CONTROL MODE SETPOINTS, CONT.

User Setpt Mode Flow (GPM)	123.45

USER SETPOINT CONTROL | AUTO LEVEL CONTROL

PIT-9013 (PSI): 123.4

TK-110 ALARM SETPOINTS

Hi Level Setpoint (")	123.45
TK-110 High Timer (ms)	1234.512
Lo Level Setpoint (")	123.45
TK-110 Low Timer (ms)	1234.512

TK-116 ALARM SETPOINTS

Hi Level Setpoint (")	123.45
TK-116 High Timer (ms)	1234.512
Lo Level Setpoint (")	123.45
TK-116 Low Timer (ms)	1234.512

Fill/Drain Trigger Levels

DUST CONTROL SETPOINTS

Valve Shutoff (min.)	12345
Flow Control Setpt (%)	12.34

DUST CONTROL ENABLE

[illegible]raction [illegible]stem | Treatment System | Discharge System | Overview | Alarm Summary | Setup Pg.2 | Email Addresses

Restart Pump at this level

Stop Pump at this level

Restart Pump after this amount of time has passed

FCV % Open (lower to reduce flow)

Per Unit offset from Influent Flow for Fill/Drain Outflow calculations

Time until Dust Control Code must be reentered

% Open for FCV-3020. Reduce to provide more flow to the Dust Control Truck Hose Bib

23 - Setup 2

Scaling for Input card/transducers - rarely will need to change

KAFB - GROUND WATER TREATMENT SYSTEM

ANALOG INPUT SCALING

FT 7001 EU Min (GPM)	123.45
FT 7001 EU Max (GPM)	123.45
LT 4001 EU Min (ft)	123.45
LT 4001 EU Max (ft)	123.45
LT 5001 EU Min (ft)	123.45
LT 5001 EU Max (ft)	123.45
FT 7002 EU Min (GPM)	123.45
FT 7002 EU Max (GPM)	123.45
LT 9020 EU Min (ft)	123.45
LT 9020 EU Max (ft)	123.45
LT 9010 EU Min (ft)	123.45
LT 9010 EU Max (ft)	123.45
PIT-9013 UE Min (PSI)	123.45
PIT-9013 EU Max (PSI)	123.45

WELL 106233 CONTROL

LoLo Level Setpoint (ft)	123.45
Well Hi Level Setpt (ft)	123.45
Well :Lo Level Setpt (ft)	123.45
Pump Restart (min.)	-12345
Flow Control Setpt (%)	12.34

WELL 106234 CONTROL

LoLo Level Setpoint (ft)	123.45
Well Hi Level Setpt (ft)	123.45
Well :Lo Level Setpt (ft)	123.45
Pump Restart (min.)	-12345
Flow Control Setpt (%)	12.34

GOLF COURSE POND

Pond Hi Level Setpt (ft)	123.45

WELL 7 CONTROL SETPOINTS

FCV9014 Lo Setpoint (PSI)	123.45
FCV9014 Hi Setpoint (PSI)	123.45
Pressure Evaluate Time (Secs)	123.45
FCV9014 Open ON Time (Secs)	123.45
FCV9014 Open OFF Time (Secs)	123.45
FCV9014 Close ON TIme (Secs)	123.45
FCV9014 Close OFF Time (Secs)	123.45
FCV9014 Stop Close ON Time (Secs)	123.45
PIT9013 LoBand Debounce Time (Secs)	123.45
PIT9013 HiBand Debounce Time (Secs)	123.45
PIT9013 Lo Alarm Debounce Time (Secs)	123.45
PIT9013 Hi Alarm Debounce Time (Secs)	123.45
PIT9013 LoAlarm Setpoint (PSI)	123.45
PIT9013 HiAlarm Setpoint (PSI)	123.45
PIT9013 AVG Period (Secs)	-123451
Well 7 Hi Level Setpt (ft)	123.45

GOLF COURSE POND

WELL 7 INJECTION

PIT-9013 (PSI) 123.4

Extraction System | Treatment System | Discharge System | Overview | Alarm Summary | Setup Pg.1

Range of allowed Pressures

Time to wait before taking another action

Pulse Definitions

Click to enter Injection Mode

Click to exit Injection Mode

Signal must be out of range for these durations before pickup is actuated

Average Window for Pressure Signal. Action is taken off of the average of the Pressure Signal over this amount of time.

High Level Trip Setpoint for Golf Course Pond level

Level for Well 7 High Alarm

1 - Email

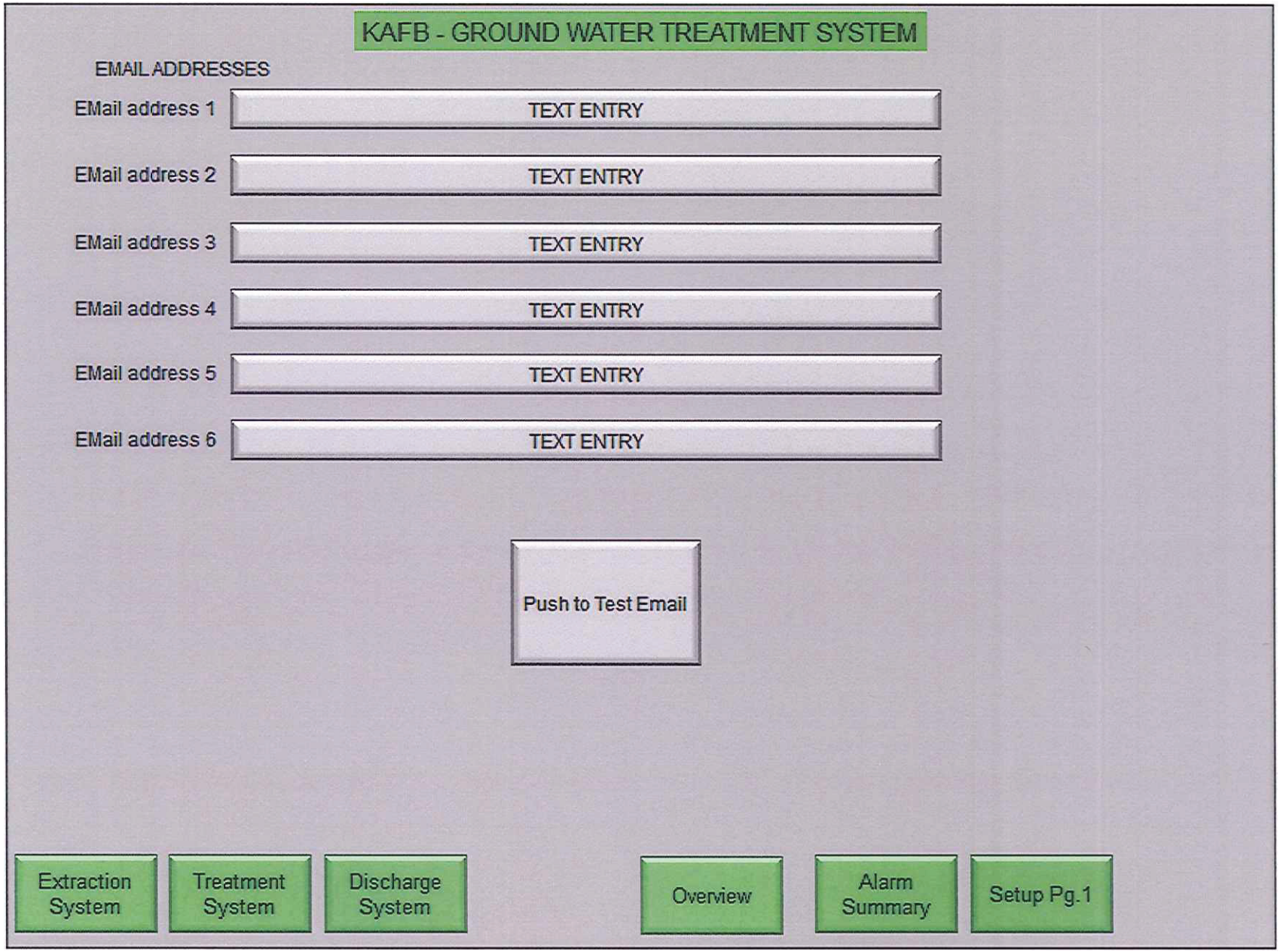
KAFB - GROUND WATER TREATMENT SYSTEM
EMAIL ADDRESSES
EMail address 1
TEXT ENTRY
EMail address 2
TEXT ENTRY
EMail address 3
TEXT ENTRY
EMail address 4
TEXT ENTRY
EMail address 5
TEXT ENTRY
EMail address 6
TEXT ENTRY
Push to Test Email
Extraction System
Treatment System
Discharge System
Overview
Alarm Summary
Setup Pg.1

THIS PAGE INTENTIONALLY LEFT BLANK

APPENDIX H

Design Calculations for Carbon Vessel Media Beds

THIS PAGE INTENTIONALLY LEFT BLANK

Project Title:	**Mid-Plume Pump and Treat System, Kirtland Air Force Base, New Mexico**	**Document Number:**	**140705-001-PR-CL-40002**
Owner:	**Process Engineering**	**Revision:**	**0**

CARBON ADSORBER DESIGN CALCULATION

Rev	Status/Changes	Performed		Checked		Approved	
		Initial	Date	Initial	Date	Initial	Date
0	100% Design	SES	3/09/15	DWB	3/10/15	BACH	3/11/15

CARBON ADSORBER DESIGN CALCULATION

Project Title:	**Mid-Plume Pump and Treat System, Kirtland Air Force Base, New Mexico**	**Document Number:**	**140705-001-PR-CL-40002**
Owner:	**Process Engineering**	**Revision:**	**0**

Table of Contents

1.0 Introduction 3

1.1 Background 3

1.2 Objectives 3

2.0 Inputs and assumptions 3

2.1 Calculation Methodology 3

2.2 Inputs 4

2.3 Assumptions 4

3.0 Results and Conclusions 5

3.1 Results 5

3.2 Conclusions 5

4.0 References 5

List of Attachments

Attachment A: Process flow diagram for groundwater treatment system
Attachment B: Groundwater data for monitoring wells
Attachment C: Design recommendations for activated carbon
Attachment D: Tigg submittals on activated carbon and carbon adsorbers
Attachment E: Spreadsheet - carbon adsorber calculations

1.0 INTRODUCTION

The mid-plume pump and treat system is part of an interim remedial measure for the Bulk Fuels Facility (BFF) groundwater plume at Kirtland AFB. The mid-plume groundwater is currently contaminated with ethylene dibromide (EDB) at concentrations above the maximum contaminant level (MCL) of 0.05 µg/L. The mid-plume pump and treat system will eventually consist of several extraction wells that are expected to produce up to 800 gpm of groundwater. Current scope of work is to design and install one groundwater extraction well and a groundwater treatment (GWT) system designed for 400 gpm of groundwater.

1.1 Background

Attachment A is a flow diagram for the mid-plume groundwater treatment system. Groundwater from the extraction well is pumped from the well through a buried pipeline into the GWT system feed tank. The groundwater is then pumped from the feed tank through pre-filters and activated carbon adsorbers which remove the EDB. The treated water from the carbon adsorbers is collected in a discharge tank and then pumped into an infiltration gallery for disposal. The design flow rate for the first extraction well is 100 gpm. Eventually additional wells and a second 400 gpm treatment system will be installed.

The carbon adsorber system is a standard two-bed unit with a piping manifold. The two carbon beds will be run in lead-lag configuration. The lead bed removes almost all of the EDB while the lag or polishing bed is on line to remove any remaining EDB from the lead bed effluent. The piping manifold for the carbon adsorbers allows either bed to serve as the lead or lag bed and allows either bed to be taken offline for carbon replacement while the other bed is in service.

1.2 Objectives

The objectives for this calculation are to determine the amount of carbon needed for EDB removal, the diameter of the carbon adsorbers and to estimate the carbon consumption. The carbon adsorbers will be sized for a maximum groundwater flow rate of 400 gpm and a minimum flow rate of 100 gpm.

2.0 INPUTS AND ASSUMPTIONS

2.1 Calculation Methodology

The amount of carbon needed in the carbon adsorbers is set by the residence time needed to remove the EDB from the groundwater. This design criteria based on the empty bed contact time which is the volume of the carbon divided by the groundwater flow rate. The required contact time depends on the characteristics of the organic, its concentration in the groundwater and the degree of removal required. Unless pilot test data is available, design contact time is based on the recommendations of the carbon vendors. EDB has a higher solubility in water and is less readily adsorbed by activated carbon than many

organics, especially hydrocarbons. In addition the drinking water standard for EDB is very low (0.05 µg/L). Because of these factors and past operating experience with EDB and similar compounds, vendors recommend a contact time of at least 8 to 10 minutes in the each of the two carbon beds operating in series. During the aquifer test on KAFB 106157, carbon treatment with a contact time of 10 to 11 minutes successfully removed EDB from the groundwater. For this calculation, the design contact time will be a more conservative 12 minutes. The additional contact time and carbon volume will be needed if dissolved gasoline range organics (GRO) from the downgradient plume are pulled into the extraction well.

Once the amount of carbon is calculated, based on the required contact time and groundwater flow rate, the diameter of the carbon bed can be determined. The diameter of the carbon bed has to be large enough so that the pressure drop through the bed is reasonable but not so large that the groundwater flow is too low. Groundwater flow rate, or hydraulic loading (calculated as gpm/square foot of carbon bed cross sectional area), must be high enough to provide good distribution of the groundwater over the carbon in the adsorber. This minimum hydraulic loading is a function of the size of the carbon, design of the carbon adsorber inlet and outlet manifolds and is obtained from the equipment vendor. Typically minimum flow is between 1 and 2 gpm per square foot (gpm/ft2). Maximum loading can be as high as 9 gpm/ft2, but 5 is a more typical design value.

Unless test data is available, carbon usage for removal of any organic, including EDB, is typically calculated from isotherm adsorption data provided by the carbon vendor. The isotherm data is a curve showing the predicted loading capacity for the organic on the carbon (grams of organic adsorbed per gram of carbon) plotted against the organic concentration in groundwater. Carbon loading for an adsorber is generally taken to be 60% to 75% of the isotherm loading. This accounts for imperfect mass transfer in the carbon bed. Once the loading is estimated, carbon usage can be calculated based on the mass of organic removed divided by the loading of the organic on the carbon.

2.2 Inputs

Inputs include:

- The groundwater design (maximum) feed rate is 400 gpm. Minimum flow to the carbon adsorbers will be 100 gpm. The carbon adsorber feed pumps will be shut down if flow drops below 100 gpm.
- Design groundwater EDB concentration is 2.0 µg/L. Actual concentration, based on recent monitoring well analysis, shown as Attachment B, should be between 0.14 and 1.4 µg/L
- Groundwater inlet temperature from the extraction well will be between 55 to 60°F.

2.3 Assumptions

1) Although Tigg and other vendors report that a contact time of 8 to 10 minutes can give acceptable removal for EDB, the carbon beds will be designed to provide 12 minutes contact time. This provides extra contact time and carbon if GRO compounds are pulled into the extraction well.
2) Carbon density is 30 pounds per cubic foot.
3) Extracted groundwater will be no higher in EDB than 2.0 µg/L. Attachment B shows recent analytical results for the three monitoring wells that are closest to the new proposed extraction well, KAFB-106228. This data shows that the EDB in the groundwater from these monitoring wells ranges from 0.16 to 1.4 µg/L. The design value of 2.0 should be conservative.
4) Based on Tigg's recommendation, minimum groundwater flow for the adsorbers will be 1 gpm per square foot of adsorber cross section.
5) Estimated EDB loading on the carbon at 2.0 µg/L inlet will be 0.0062 gram of EDB per gram of carbon.

3.0 RESULTS AND CONCLUSIONS

3.1 Results

At the design flow rate of 400 gpm of groundwater and a design contact time of 12 minutes, 20,000 pounds of carbon is required. Standard 20,000 pound carbon beds are 10 foot diameter.

With 10 foot diameter carbon bed and a minimum groundwater flow of 100 gpm. The hydraulic loading is 1.27 gpm per square foot which is above the minimum value of 1.0. At 400 gpm the hydraulic loading is 5.1 gpm/ft2 and vendor pressure drop curves shows less than 2 psi pressure drop over the system.

At a design EDB concentration of 2.0 µg/L of EDB in the groundwater and a groundwater flow of 400 gpm, carbon usage is estimated to be 567 pounds per year. Based on this usage the 20,000 pound carbon adsorber should last 20 years. It is likely that the bed life will be limited by fouling due to mineral scale, fine soil particles or biological deposits. A yearly evaluation of pressure drop through the carbon beds and EDB removal trends is recommended. It is not uncommon to change carbon on a yearly or biannual basis in this type of service.

3.2 Conclusions

The carbon adsorption system design of two 10 foot diameter beds, each containing 20,000 pounds of carbon, meets all design criteria.

4.0 REFERENCES

Table 5-1 in Kirtland BFF Quarterly reports contains the analytical data on the groundwater monitoring wells. Monitoring wells KAFB-106035, KAFB-106036 and KAFB-106037 are close to the location of the first extraction well, KAFB-106228. The data shown in Atttachment B is extracted from this table in the quarterly reports.

The letter report on the KAFB 106157 aquifer test is:

USACE, 2014, "Fourth Quarter CY2013 Aquifer Test Results", January 27, 2014, Bulk Fuels Facility Spill, Solid Waste Management Units ST-106 and SS-111. Prepared by Shaw Environmental & Infrastructure, Inc. for the USACE Albuquerque District under USACE Contract No. W912DY-10-D-0014, Delivery Order 002. October.

The work plan which describes the carbon adsorption system is:

USACE, 2013a, *Groundwater Extraction Well KAFB-106157 Aquifer Testing Work Plan, Bulk Fuels Facility, Spill, Solid Waste Management Units ST-106 and SS-111.* Prepared by Shaw Environmental & Infrastructure, Inc. for the USACE Albuquerque District under USACE Contract No. W912DY-10-D-0014, Delivery Order 002. October.

CARBON ADSORBER DESIGN CALCULATION

Project Title:	**Mid-Plume Pump and Treat System, Kirtland Air Force Base, New Mexico**	**Document Number:**	**140705-001-PR-CL-40002**
Owner:	**Process Engineering**	**Revision:**	**0**

Attachment A:

Process flow diagram for groundwater

treatment system

THIS PAGE INTENTIONALLY LEFT BLANK

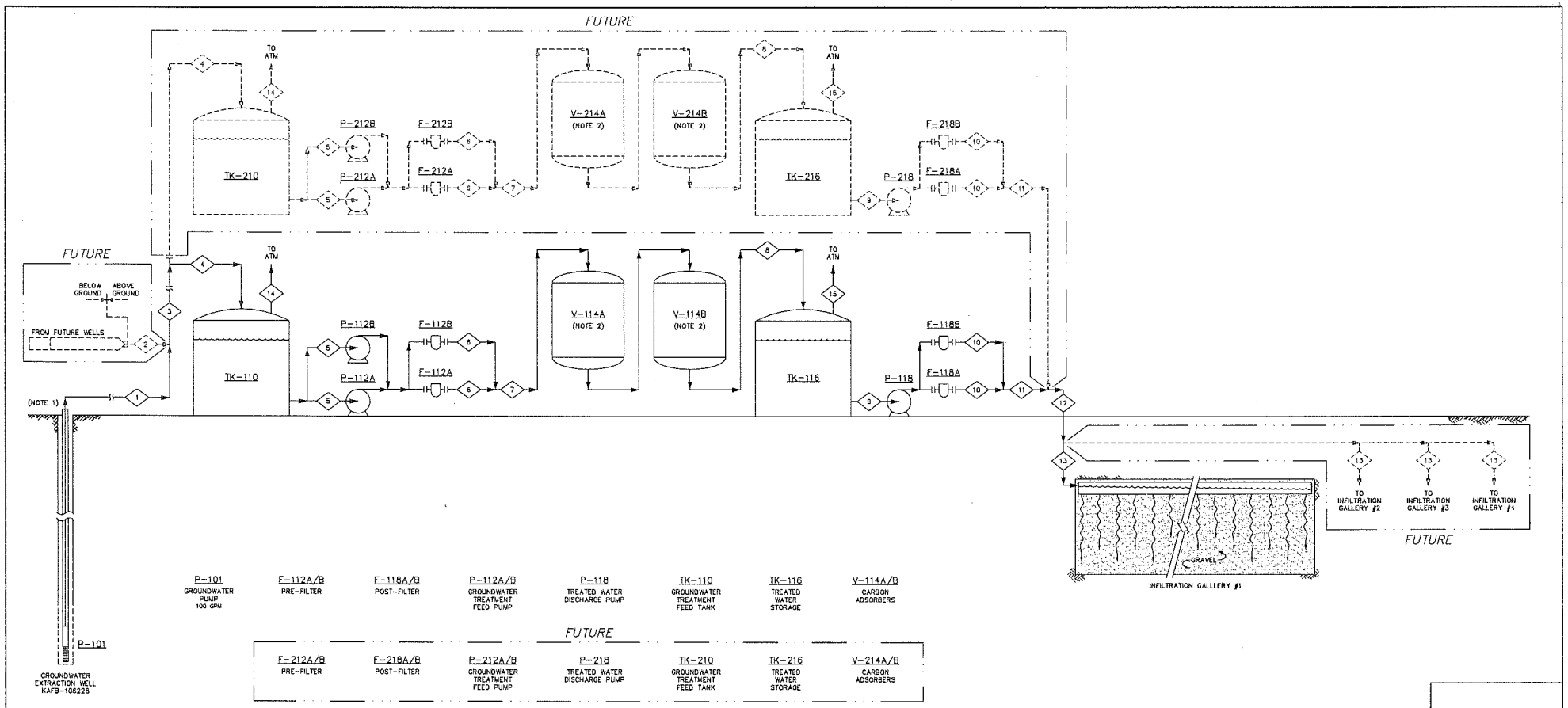

P-101 GROUNDWATER PUMP 100 GPM	F-112A/B PRE-FILTER	F-118A/B POST-FILTER	P-112A/B GROUNDWATER TREATMENT FEED PUMP	P-118 TREATED WATER DISCHARGE PUMP	TK-110 GROUNDWATER TREATMENT FEED TANK	TK-116 TREATED WATER STORAGE	V-114A/B CARBON ADSORBERS

FUTURE

F-212A/B PRE-FILTER	F-218A/B POST-FILTER	P-212A/B GROUNDWATER TREATMENT FEED PUMP	P-218 TREATED WATER DISCHARGE PUMP	TK-210 GROUNDWATER TREATMENT FEED TANK	TK-216 TREATED WATER STORAGE	V-214A/B CARBON ADSORBERS

STREAM NO. / COMPONENT		1	2	3	4	5	6	7	8	9	10	11	12	13	14	15			
		KAFB-106228 TO GWTS	FUTURE WELLS TO GWTS	WELL FIELD TO GWTS	INFLUENT TO FEED TANK	GWTS FEED PUMPS	PRE-FILTER	CARBON ABSORPTION INLET	TREATED WATER	DISCHARGE PUMP	POST-FILTER	TREATED DISCHARGE	TREATED DISCHARGE	INFILTRATION GALLERY	TREATED WATER STORAGE TANK VENT	TREATED WATER STORAGE TANK VENT			
LIQUID FLOW (maximum)	gpm		700	800	400	200	400	400	400	400	400	400	800	200					
LIQUID FLOW (average)	gpm	100																	
AIR FLOW	acfm (scfm)																		
INFILTRATION RATE	gal/day/ft²													TBD		ATM			
ETHYLENE DIBROMIDE (EDB)	µg/L	2	2	2	2	2	2	2	0.03	0.03	0.03	0.03	0.03	0.03					
PRESSURE	psig	25	25	25	25	19	25	25	25	19	25	25	25	1	(12.05)	(12.05)			
TEMPERATURE	°F	58	58	58	58	58	58	58	58	58	58	58	58	58	68	68			
DENSITY (AT 70°F)	lb/ft³	62.4	62.4	62.4	62.4	62.4	62.4	62.4	62.4	62.4	62.4	62.4	62.4	62.4	0.061	0.061			

NOTES

1. PIPELINE FROM GROUNDWATER WELL KAFB-106228 IS DOUBLE-WALLED HDPE PIPE.
2. CARBON VESSELS ARE RUN IN SERIES WITH OPTIONAL VALVING FOR PARALLEL AND LEAD/LAG CONFIGURATION. SEE DRAWING 03-000003 FOR VALVING DETAIL.

REFERENCE DRAWINGS	NO.	REVISION	DRAWN	CK'D	APPD	DATE
	A	30% INTERNAL REVIEW	EGA	ACS	SES	1/9/15

THIS DOCUMENT IS THE PROPERTY OF CHICAGO BRIDGE & IRON COMPANY ("CB&I"). IT MAY CONTAIN INFORMATION DESCRIBING TECHNOLOGY OWNED BY CB&I AND DEEMED TO BE COMMERCIALLY SENSITIVE. IT IS TO BE USED ONLY IN CONNECTION WITH WORK BEING PERFORMED BY CB&I. REPRODUCTION IN WHOLE OR IN PART FOR ANY PURPOSE, OTHER THAN WORK PERFORMED BY CB&I IS FORBIDDEN EXCEPT BY EXPRESS WRITTEN PERMISSION OF CB&I. IT IS TO BE SAFEGUARDED AGAINST BOTH DELIBERATE AND INADVERTENT DISCLOSURE TO ANY THIRD PARTY.

DRAWN: EGA | CK'D: ACS | APPD: SES | DATE: 1/9/15 | SCALE: NONE

U.S. ARMY ENGINEER DISTRICT
CORPS OF ENGINEERS
ALBUQUERQUE, NEW MEXICO

PROFESSIONAL SEAL

CB&I FEDERAL SERVICES LLC
312 DIRECTORS DRIVE
KNOXVILLE, TENNESSEE 37923
865-690-3211

CLIENT DWG NO.

PROCESS FLOW DIAGRAM (PFD)

PHASE IV MID-PLUME PUMP & TREAT SYSTEM

FOR: BULK FUELS FACILITY, KIRTLAND AFB, NM

PROJECT NO: 140705 | DWG NO: 140705-001-PR-01-000001 | REV: A

Form: CB1-EN-00-IN-0131 CB Arts R.dwg

File: 140705-001-PR-01-000001.dwg
Plot Date/Time: Jan 09, 2015 - 10:34am
Plotted By: Edwin Anderson

THIS PAGE INTENTIONALLY LEFT BLANK

CARBON ADSORBER DESIGN CALCULATION

Project Title:	**Mid-Plume Pump and Treat System, Kirtland Air Force Base, New Mexico**	**Document Number:**	**140705-001-PR-CL-40002**
Owner:	**Process Engineering**	**Revision:**	**0**

Attachment B:

Groundwater data for monitoring wells

THIS PAGE INTENTIONALLY LEFT BLANK

Attachment B-Groundwater Analyses
(for well cluster near proposed new extraction well)

LOCATION_CODE		KAFB-106035 -- 0 - 22ft below water level											
SAMPLE_NO		GW1320			GW1454			GW1586			GW1751		
SAMPLE_DATE		16-Oct-13			27-Jan-14			9-Apr-14			15-Jul-14		
PURP		REG			REG			REG			REG		
Test Group	Units	Result	Qual	LOD	Result	Qual	LOD	Result	Qual	LOD	Result	Qual	LOD
1,2-DIBROMOETHANE	ug/L	0.667		0.0188	1.42	D	0.0932	1.35	D	0.0942	0.514		0.0188
Water Chemistry													
OXIDATION-REDUCTION POTENTIAL	MV	31			-54			125					
SPECIFIC CONDUCTIVITY	US/CM	430.9			473.2			441.1					
PH	PH UNITS	7.64			9.12			7.69					
TEMPERATURE	DEG C	18.64			18.85			19.04					
TURBIDITY, NTU	NTU	1.23			1.53			0.35					
DISSOLVED OXYGEN	MG/L	5.18			3.81			4.51					
ALKALINITY, TOTAL	MG/L	140			140			148					
BROMIDE	mg/L	0.372		0.125	0.418		0.125	0.421	MJ	0.125	0.372		0.125
CHLORIDE	mg/L	31.7	M	0.33	37.6		0.33	38.6		0.33	39.2		0.33
SULFATE	mg/L	46.8	M	1	46.1		1	46.7		1	46.9		1
NITROGEN, NITRATE-NITRITE	mg/L	0.428	J	0.75	0.326	J	0.75	0.311	J	0.75	0.453	JN	0.75
ALKALINITY, BICARBONATE (AS CACO3)	mg/L	115		1	120		1	123		1	131		1
ALKALINITY, CARBONATE (AS CACO3)	mg/L	ND	U	1	ND	U	1	ND	U	1	ND	U	1
AMMONIA (AS N)	mg/L	ND	U	0.15	ND	U	0.15	ND	U	0.15	0.157	J	0.15
SULFIDE, TOTAL	mg/L	ND	U	1.69	ND	U	1.82	ND	U	1.82	0.863	J	1.96
Metals													
CALCIUM	mg/L	50.7		2	54.1		2	51.8		2	55.7		2
LEAD	mg/L	0.00215	J	0.003	ND	U	0.003	ND	U	0.003	ND	U	0.003
MAGNESIUM	mg/L	6.67		3	7.17	N	3	7.53		3	7.94		3
POTASSIUM	mg/L	2.37	J	3	2.42	NJ	3	2.44	J	3	2.57	J	3
SODIUM	mg/L	27.5		3	29.1		3	28.7		3	30.7		3
IRON, DISSOLVED	mg/L	ND	U	0.06	ND	U	0.06	ND	U	0.06	ND	U	0.06
MANGANESE, DISSOLVED	mg/L	ND	U	0.006	ND	U	0.006	ND	U	0.006	ND	U	0.006
Hydrocarbons													
DIESEL RANGE ORGANICS	mg/L	ND	U	0.198	ND	U	0.2	ND	XU	0.2	ND	U	0.204
GASOLINE RANGE ORGANICS	mg/L	ND	U	0.1	ND	U	0.1	ND	U	0.1	ND	U	0.1
VOCs													
1,1,1,2-TETRACHLOROETHANE	ug/L	ND	U	0.5	ND	U	0.5	ND	XU	0.5	ND	U	0.5
1,1,1-TRICHLOROETHANE	ug/L	ND	U	0.5	ND	U	0.5	ND	U	0.5	ND	U	0.5
1,1,2,2-TETRACHLOROETHANE	ug/L	ND	U	0.5	ND	U	0.5	ND	U	0.5	ND	U	0.5
1,1,2-TRICHLOROETHANE	ug/L	ND	U	0.5	ND	U	0.5	ND	U	0.5	ND	U	0.5
1,1-DICHLOROETHANE	ug/L	ND	U	0.5	ND	U	0.5	ND	U	0.5	ND	U	0.5
1,1-DICHLOROETHENE	ug/L	ND	U	0.5	ND	U	0.5	ND	U	0.5	ND	U	0.5
1,1-DICHLOROPROPENE	ug/L	ND	U	0.5	ND	U	0.5	ND	U	0.5	ND	U	0.5
1,2,3-TRICHLOROBENZENE	ug/L	ND	U	0.5	ND	U	0.5	ND	U	0.5	ND	U	0.5
1,2,3-TRICHLOROPROPANE	ug/L	ND	U	1	ND	U	1	ND	U	1	ND	U	1
1,2,4-TRICHLOROBENZENE	ug/L	ND	U	0.5	ND	U	0.5	ND	U	0.5	ND	U	0.5
1,2,4-TRIMETHYLBENZENE	ug/L	ND	U	0.5	ND	U	0.5	ND	U	0.5	ND	U	0.5
1,2-DIBROMO-3-CHLOROPROPANE	ug/L	ND	U	1	ND	U	1	ND	U	1	ND	U	1
1,2-DIBROMOETHANE	ug/L	0.77	J	0.5	1.32		0.5	1.18		0.5	0.658	J	0.5
1,2-DICHLOROBENZENE	ug/L	ND	U	0.5	ND	U	0.5	ND	U	0.5	ND	U	0.5
1,2-DICHLOROETHANE	ug/L	ND	U	0.5	ND	U	0.5	ND	U	0.5	ND	U	0.5
1,2-DICHLOROPROPANE	ug/L	ND	U	0.5	ND	U	0.5	ND	U	0.5	ND	U	0.5
1,3,5-TRIMETHYLBENZENE	ug/L	ND	U	0.5	ND	U	0.5	ND	U	0.5	ND	U	0.5
1,3-DICHLOROBENZENE	ug/L	ND	U	0.5	ND	U	0.5	ND	U	0.5	ND	U	0.5
1,3-DICHLOROPROPANE	ug/L	ND	U	0.5	ND	U	0.5	ND	U	0.5	ND	U	0.5
1,4-DICHLOROBENZENE	ug/L	ND	U	0.5	ND	U	0.5	ND	U	0.5	ND	U	0.5
2,2-DICHLOROPROPANE	ug/L	ND	U	0.5	ND	XU	0.5	ND	U	0.5	ND	U	0.5
2-BUTANONE	ug/L	ND	U	5	ND	U	5	ND	U	5	ND	U	5
2-CHLOROTOLUENE	ug/L	ND	U	0.5	ND	U	0.5	ND	U	0.5	ND	U	0.5
2-HEXANONE	ug/L	ND	U	2.5	ND	U	2.5	ND	U	2.5	ND	U	2.5
4-CHLOROTOLUENE	ug/L	ND	U	0.5	ND	U	0.5	ND	U	0.5	ND	U	0.5
4-METHYL-2-PENTANONE	ug/L	ND	U	2.5	ND	U	2.5	ND	U	2.5	ND	U	2.5
ACETONE	ug/L	ND	U	5	ND	XU	5	ND	U	5	2.76	XJ	5
BENZENE	ug/L	ND	U	0.5	ND	U	0.5	ND	U	0.5	ND	U	0.5
BROMOBENZENE	ug/L	ND	U	0.5	ND	U	0.5	ND	U	0.5	ND	U	0.5
BROMOCHLOROMETHANE	ug/L	ND	U	0.5	ND	U	0.5	ND	U	0.5	ND	U	0.5

Attachment B-Groundwater Analyses
(for well cluster near proposed new extraction well)

LOCATION_CODE		KAFB-106035 -- 0 - 22ft below water level											
SAMPLE_NO		GW1320			GW1454			GW1586			GW1751		
SAMPLE_DATE		16-Oct-13			27-Jan-14			9-Apr-14			15-Jul-14		
PURP		REG			REG			REG			REG		
Test Group	Units	Result	Qual	LOD	Result	Qual	LOD	Result	Qual	LOD	Result	Qual	LOD
BROMODICHLOROMETHANE	ug/L	ND	U	0.5	ND	U	0.5	ND	U	0.5	ND	U	0.5
BROMOFORM	ug/L	ND	U	0.5	ND	U	0.5	ND	XU	0.5	ND	U	0.5
BROMOMETHANE	ug/L	ND	U	1	ND	U	1	ND	U	1	ND	XU	1
CARBON DISULFIDE	ug/L	ND	U	0.5	ND	U	0.5	ND	U	0.5	ND	U	0.5
CARBON TETRACHLORIDE	ug/L	ND	U	0.5	ND	U	0.5	ND	U	0.5	ND	U	0.5
CHLOROBENZENE	ug/L	ND	U	0.5	ND	U	0.5	ND	U	0.5	ND	U	0.5
CHLOROETHANE	ug/L	ND	U	1	ND	U	1	ND	U	1	ND	U	1
CHLOROFORM	ug/L	ND	U	0.5	ND	U	0.5	ND	U	0.5	ND	U	0.5
CHLOROMETHANE	ug/L	ND	U	0.5	ND	U	0.5	ND	U	0.5	ND	U	0.5
CIS-1,2-DICHLOROETHENE	ug/L	ND	U	0.5	ND	U	0.5	ND	U	0.5	ND	U	0.5
CIS-1,3-DICHLOROPROPENE	ug/L	ND	U	0.5	ND	U	0.5	ND	U	0.5	ND	U	0.5
DIBROMOCHLOROMETHANE	ug/L	ND	U	0.5	ND	U	0.5	ND	U	0.5	ND	U	0.5
DIBROMOMETHANE	ug/L	ND	U	0.5	ND	U	0.5	ND	U	0.5	ND	U	0.5
DICHLORODIFLUOROMETHANE	ug/L	ND	U	1	ND	XU	1	ND	U	1	ND	U	1
ETHYLBENZENE	ug/L	ND	U	0.5	ND	U	0.5	ND	U	0.5	ND	U	0.5
HEXACHLOROBUTADIENE	ug/L	ND	U	0.5	ND	U	0.5	ND	U	0.5	ND	U	0.5
ISOPROPYLBENZENE	ug/L	ND	U	0.5	ND	U	0.5	ND	XU	0.5	ND	U	0.5
METHYL TERT-BUTYL ETHER	ug/L	ND	U	0.5	ND	U	0.5	ND	U	0.5	ND	U	0.5
METHYLENE CHLORIDE	ug/L	ND	U	1	ND	U	1	ND	U	1	ND	U	1
NAPHTHALENE	ug/L	ND	U	0.5	ND	U	0.5	ND	U	0.5	ND	U	0.5
N-BUTYLBENZENE	ug/L	ND	U	0.5	ND	U	0.5	ND	U	0.5	ND	U	0.5
N-PROPYLBENZENE	ug/L	ND	U	0.5	ND	U	0.5	ND	U	0.5	ND	U	0.5
P-ISOPROPYLTOLUENE	ug/L	ND	U	0.5	ND	U	0.5	ND	U	0.5	ND	U	0.5
SEC-BUTYLBENZENE	ug/L	ND	U	0.5	ND	U	0.5	ND	U	0.5	ND	U	0.5
STYRENE	ug/L	ND	U	0.5	ND	U	0.5	ND	XU	0.5	ND	U	0.5
TERT-BUTYLBENZENE	ug/L	ND	U	0.5	ND	U	0.5	ND	U	0.5	ND	U	0.5
TETRACHLOROETHENE	ug/L	ND	U	0.5	ND	U	0.5	ND	XU	0.5	ND	U	0.5
TOLUENE	ug/L	ND	U	0.5	ND	U	0.5	ND	U	0.5	ND	U	0.5
TRANS-1,2-DICHLOROETHENE	ug/L	ND	U	0.5	ND	U	0.5	ND	U	0.5	ND	U	0.5
TRANS-1,3-DICHLOROPROPENE	ug/L	ND	U	0.5	ND	U	0.5	ND	U	0.5	ND	U	0.5
TRICHLOROETHENE	ug/L	ND	U	0.5	ND	U	0.5	ND	U	0.5	ND	U	0.5
TRICHLOROFLUOROMETHANE	ug/L	ND	U	1	ND	U	1	ND	U	1	ND	U	1
VINYL CHLORIDE	ug/L	ND	U	0.5	ND	U	0.5	ND	U	0.5	ND	U	0.5
XYLENES	ug/L	ND	U	1.5	ND	U	1.5	ND	U	1.5	ND	U	1.5

Attachment B-Groundwater Analyses
(for well cluster near proposed new extraction well)

LOCATION_CODE		KAFB-106036 -- 22 - 37 ft below water level											
SAMPLE_NO		GW1321			GW1455			GW1587			GW1752		
SAMPLE_DATE		16-Oct-13			27-Jan-14			9-Apr-14			10-Jul-14		
PURP		REG			REG			REG			REG		
Test Group	Units	Result	Qual	LOD	Result	Qual	LOD	Result	Qual	LOD	Result	Qual	LOD
1,2-DIBROMOETHANE	ug/L	0.481		0.0188	0.58		0.0187	0.601		0.0189	0.493		0.0189
Water Chemistry													
OXIDATION-REDUCTION POTENTIAL	MV	76			127			217					
SPECIFIC CONDUCTIVITY	US/CM	520.6			501			485.7					
PH	PH UNITS	7.63			7.73			7.66					
TEMPERATURE	DEG C	18.86			17.79			19.24					
TURBIDITY, NTU	NTU	0.97			2.11			0.47					
DISSOLVED OXYGEN	MG/L	3.96			2.93			2.98					
ALKALINITY, TOTAL	MG/L	136			120			132					
BROMIDE	mg/L	0.538		0.125	0.5		0.125	0.458	MJ	0.125	0.473		0.125
CHLORIDE	mg/L	44.5	M	0.33	44.4		0.33	41.7		0.33	44.1		0.33
SULFATE	mg/L	64.3	M	1	59.6		1	55.6		1	58.7		1
NITROGEN, NITRATE-NITRITE	mg/L	0.798	J	0.75	0.66	J	0.75	0.55	J	0.75	0.573	NJ	0.75
ALKALINITY, BICARBONATE (AS CACO3)	mg/L	120		1	122		1	128		1	134		1
ALKALINITY, CARBONATE (AS CACO3)	mg/L	ND	U	1	ND	U	1	ND	U	1	ND	U	1
AMMONIA (AS N)	mg/L	ND	U	0.15	ND	U	0.15	ND	U	0.15	0.159	J	0.15
SULFIDE, TOTAL	mg/L	ND	U	1.69	ND	U	1.79	ND	U	1.82	ND	U	2
Metals													
CALCIUM	mg/L	63.2		2	61.1		2	58.5		2	63.2		2
LEAD	mg/L	0.00155	J	0.003	ND	U	0.003	ND	U	0.003	ND	U	0.003
MAGNESIUM	mg/L	8.3		3	8.16	N	3	8.51		3	8.87		3
POTASSIUM	mg/L	2.66	J	3	2.57	NJ	3	2.73	J	3	2.76	J	3
SODIUM	mg/L	29.6		3	29.6		3	29.8		3	32		3
IRON, DISSOLVED	mg/L	ND	U	0.06	ND	U	0.06	0.0332	J	0.06	ND	U	0.06
MANGANESE, DISSOLVED	mg/L	ND	U	0.006	ND	U	0.006	ND	U	0.006	ND	U	0.006
Hydrocarbons													
DIESEL RANGE ORGANICS	mg/L	ND	U	0.198	ND	U	0.222	ND	XU	0.196	ND	U	0.192
GASOLINE RANGE ORGANICS	mg/L	ND	U	0.1	ND	U	0.1	ND	U	0.1	ND	U	0.1
VOCs													
1,1,1,2-TETRACHLOROETHANE	ug/L	ND	U	0.5	ND	U	0.5	ND	XU	0.5	ND	U	0.5
1,1,1-TRICHLOROETHANE	ug/L	ND	U	0.5	ND	U	0.5	ND	U	0.5	ND	QU	0.5
1,1,2,2-TETRACHLOROETHANE	ug/L	ND	U	0.5	ND	U	0.5	ND	U	0.5	ND	U	0.5
1,1,2-TRICHLOROETHANE	ug/L	ND	U	0.5	ND	U	0.5	ND	U	0.5	ND	U	0.5
1,1-DICHLOROETHANE	ug/L	ND	U	0.5	ND	U	0.5	ND	U	0.5	ND	U	0.5
1,1-DICHLOROETHENE	ug/L	ND	U	0.5	ND	U	0.5	ND	U	0.5	ND	U	0.5
1,1-DICHLOROPROPENE	ug/L	ND	U	0.5	ND	U	0.5	ND	U	0.5	ND	U	0.5
1,2,3-TRICHLOROBENZENE	ug/L	ND	U	0.5	ND	U	0.5	ND	U	0.5	ND	U	0.5
1,2,3-TRICHLOROPROPANE	ug/L	ND	U	1	ND	U	1	ND	U	1	ND	U	1
1,2,4-TRICHLOROBENZENE	ug/L	ND	U	0.5	ND	U	0.5	ND	U	0.5	ND	U	0.5
1,2,4-TRIMETHYLBENZENE	ug/L	ND	U	0.5	ND	U	0.5	ND	U	0.5	ND	U	0.5
1,2-DIBROMO-3-CHLOROPROPANE	ug/L	ND	U	1	ND	U	1	ND	U	1	ND	U	1
1,2-DIBROMOETHANE	ug/L	0.57	J	0.5	0.51	J	0.5	0.529	J	0.5	0.482	J	0.5
1,2-DICHLOROBENZENE	ug/L	ND	U	0.5	ND	U	0.5	ND	U	0.5	ND	U	0.5
1,2-DICHLOROETHANE	ug/L	ND	U	0.5	ND	U	0.5	ND	U	0.5	ND	U	0.5
1,2-DICHLOROPROPANE	ug/L	ND	U	0.5	ND	U	0.5	ND	U	0.5	ND	U	0.5
1,3,5-TRIMETHYLBENZENE	ug/L	ND	U	0.5	ND	U	0.5	ND	U	0.5	ND	U	0.5
1,3-DICHLOROBENZENE	ug/L	ND	U	0.5	ND	U	0.5	ND	U	0.5	ND	U	0.5
1,3-DICHLOROPROPANE	ug/L	ND	U	0.5	ND	U	0.5	ND	U	0.5	ND	U	0.5
1,4-DICHLOROBENZENE	ug/L	ND	U	0.5	ND	U	0.5	ND	U	0.5	ND	U	0.5
2,2-DICHLOROPROPANE	ug/L	ND	U	0.5	ND	XU	0.5	ND	U	0.5	ND	U	0.5
2-BUTANONE	ug/L	ND	U	5	ND	U	5	ND	U	5	ND	U	5
2-CHLOROTOLUENE	ug/L	ND	U	0.5	ND	U	0.5	ND	U	0.5	ND	U	0.5
2-HEXANONE	ug/L	ND	U	2.5	ND	U	2.5	ND	U	2.5	ND	U	2.5
4-CHLOROTOLUENE	ug/L	ND	U	0.5	ND	U	0.5	ND	U	0.5	ND	U	0.5
4-METHYL-2-PENTANONE	ug/L	ND	U	2.5	ND	U	2.5	ND	U	2.5	ND	U	2.5
ACETONE	ug/L	ND	U	5	ND	XU	5	ND	U	5	ND	J	5
BENZENE	ug/L	ND	U	0.5	ND	U	0.5	ND	U	0.5	ND	U	0.5
BROMOBENZENE	ug/L	ND	U	0.5	ND	U	0.5	ND	U	0.5	ND	U	0.5
BROMOCHLOROMETHANE	ug/L	ND	U	0.5	ND	U	0.5	ND	U	0.5	ND	U	0.5

Attachment B-Groundwater Analyses
(for well cluster near proposed new extraction well)

LOCATION_CODE		KAFB-106036 -- 22 - 37 ft below water level											
SAMPLE_NO		GW1321			GW1455			GW1587			GW1752		
SAMPLE_DATE		16-Oct-13			27-Jan-14			9-Apr-14			10-Jul-14		
PURP		REG			REG			REG			REG		
Test Group	Units	Result	Qual	LOD	Result	Qual	LOD	Result	Qual	LOD	Result	Qual	LOD
BROMODICHLOROMETHANE	ug/L	ND	U	0.5	ND	U	0.5	ND	U	0.5	ND	U	0.5
BROMOFORM	ug/L	ND	U	0.5	ND	U	0.5	ND	XU	0.5	ND	QU	0.5
BROMOMETHANE	ug/L	ND	U	1	ND	U	1	ND	U	1	ND	U	1
CARBON DISULFIDE	ug/L	ND	U	0.5	ND	U	0.5	ND	U	0.5	ND	U	0.5
CARBON TETRACHLORIDE	ug/L	ND	U	0.5	ND	U	0.5	ND	U	0.5	ND	QU	0.5
CHLOROBENZENE	ug/L	ND	U	0.5	ND	U	0.5	ND	U	0.5	ND	U	0.5
CHLOROETHANE	ug/L	ND	U	1	ND	U	1	ND	U	1	ND	U	1
CHLOROFORM	ug/L	ND	U	0.5	ND	U	0.5	ND	U	0.5	ND	U	0.5
CHLOROMETHANE	ug/L	ND	U	0.5	ND	U	0.5	ND	U	0.5	ND	U	0.5
CIS-1,2-DICHLOROETHENE	ug/L	ND	U	0.5	ND	U	0.5	ND	U	0.5	ND	U	0.5
CIS-1,3-DICHLOROPROPENE	ug/L	ND	U	0.5	ND	U	0.5	ND	U	0.5	ND	U	0.5
DIBROMOCHLOROMETHANE	ug/L	ND	U	0.5	ND	U	0.5	ND	U	0.5	ND	U	0.5
DIBROMOMETHANE	ug/L	ND	U	0.5	ND	U	0.5	ND	U	0.5	ND	U	0.5
DICHLORODIFLUOROMETHANE	ug/L	ND	U	1	ND	XU	1	ND	U	1	ND	QU	1
ETHYLBENZENE	ug/L	ND	U	0.5	ND	U	0.5	ND	U	0.5	ND	U	0.5
HEXACHLOROBUTADIENE	ug/L	ND	U	0.5	ND	U	0.5	ND	U	0.5	ND	U	0.5
ISOPROPYLBENZENE	ug/L	ND	U	0.5	ND	U	0.5	ND	XU	0.5	ND	U	0.5
METHYL TERT-BUTYL ETHER	ug/L	ND	U	0.5	ND	U	0.5	ND	U	0.5	ND	U	0.5
METHYLENE CHLORIDE	ug/L	ND	U	1	ND	U	1	ND	U	1	ND	U	1
NAPHTHALENE	ug/L	ND	U	0.5	ND	U	0.5	ND	U	0.5	ND	U	0.5
N-BUTYLBENZENE	ug/L	ND	U	0.5	ND	U	0.5	ND	U	0.5	ND	U	0.5
N-PROPYLBENZENE	ug/L	ND	U	0.5	ND	U	0.5	ND	U	0.5	ND	U	0.5
P-ISOPROPYLTOLUENE	ug/L	ND	U	0.5	ND	U	0.5	ND	U	0.5	ND	U	0.5
SEC-BUTYLBENZENE	ug/L	ND	U	0.5	ND	U	0.5	ND	U	0.5	ND	U	0.5
STYRENE	ug/L	ND	U	0.5	ND	U	0.5	ND	XU	0.5	ND	U	0.5
TERT-BUTYLBENZENE	ug/L	ND	U	0.5	ND	U	0.5	ND	U	0.5	ND	U	0.5
TETRACHLOROETHENE	ug/L	ND	U	0.5	ND	U	0.5	ND	XU	0.5	ND	U	0.5
TOLUENE	ug/L	ND	U	0.5	ND	U	0.5	ND	U	0.5	ND	U	0.5
TRANS-1,2-DICHLOROETHENE	ug/L	ND	U	0.5	ND	U	0.5	ND	U	0.5	ND	U	0.5
TRANS-1,3-DICHLOROPROPENE	ug/L	ND	U	0.5	ND	U	0.5	ND	U	0.5	ND	U	0.5
TRICHLOROETHENE	ug/L	ND	U	0.5	ND	U	0.5	ND	U	0.5	ND	U	0.5
TRICHLOROFLUOROMETHANE	ug/L	ND	U	1	ND	U	1	ND	U	1	ND	QU	1
VINYL CHLORIDE	ug/L	ND	U	0.5	ND	U	0.5	ND	U	0.5	ND	QU	0.5
XYLENES	ug/L	ND	U	1.5	ND	U	1.5	ND	U	1.5	ND	U	1.5

Attachment B-Groundwater Analyses
(for well cluster near proposed new extraction well)

LOCATION_CODE		KAFB-106037 – 47 to 62 ft below water level											
SAMPLE_NO		GW1322			GW1456			GW1588			GW1753		
SAMPLE_DATE		16-Oct-13			27-Jan-14			9-Apr-14			10-Jul-14		
PURP		REG			REG			REG			REG		
Test Group	Units	Result	Qual	LOD	Result	Qual	LOD	Result	Qual	LOD	Result	Qual	LOD
1,2-DIBROMOETHANE	ug/L	0.23		0.0188	0.171		0.0188	0.157		0.0188	0.182		0.0184
Water Chemistry													
OXIDATION-REDUCTION POTENTIAL	MV	167			169			210					
SPECIFIC CONDUCTIVITY	US/CM	339			317.2			312.6					
PH	PH UNITS	7.65			7.75			7.7					
TEMPERATURE	DEG C	18.5			17.47			19.01					
TURBIDITY, NTU	NTU	2.34			1.66			0.46					
DISSOLVED OXYGEN	MG/L	7.05			6.6			7.83					
ALKALINITY, TOTAL	MG/L	132			128			124					
BROMIDE	mg/L	0.121		0.125	ND	U	0.125	ND	MU	0.125	0.047	J	0.125
CHLORIDE	mg/L	11.4	M	0.33	10.4		0.33	10.2		0.33	10.3		0.33
SULFATE	mg/L	36.9	M	1	33.4		1	33.1		1	33.7		1
NITROGEN, NITRATE-NITRITE	mg/L	0.306	J	0.75	ND	U	0.75	ND	U	0.75	ND	UN	0.75
ALKALINITY, BICARBONATE (AS CACO3)	mg/L	106		1	107		1	112		1	116		1
ALKALINITY, CARBONATE (AS CACO3)	mg/L	ND	U	1	ND	U	1	ND	U	1	ND	U	1
AMMONIA (AS N)	mg/L	ND	U	0.15	ND	U	0.15	ND	U	0.15	ND	U	0.15
SULFIDE, TOTAL	mg/L	ND	U	1.69	ND	U	1.79	ND	U	1.75	ND	U	2
Metals													
CALCIUM	mg/L	38.5		2	35.7		2	35.6		2	37.2		2
LEAD	mg/L	0.00157	J	0.003	ND	U	0.003	ND	U	0.003	ND	U	0.003
MAGNESIUM	mg/L	5.08		3	4.9	NJ	3	5.28		3	5.37		3
POTASSIUM	mg/L	2.12	J	3	1.97	NJ	3	2.12	J	3	2.17	J	3
SODIUM	mg/L	22.8		3	22.3		3	23.2		3	24.7		3
IRON, DISSOLVED	mg/L	ND	U	0.06	ND	U	0.06	ND	U	0.06	ND	U	0.06
MANGANESE, DISSOLVED	mg/L	ND	U	0.006	ND	U	0.006	ND	U	0.006	ND	U	0.006
Hydrocarbons													
DIESEL RANGE ORGANICS	mg/L	ND	U	0.2	ND	U	0.2	ND	XU	0.2	ND	U	0.196
GASOLINE RANGE ORGANICS	mg/L	ND	U	0.1	ND	U	0.1	ND	U	0.1	ND	U	0.1
VOCs													
1,1,1,2-TETRACHLOROETHANE	ug/L	ND	U	0.5	ND	U	0.5	ND	XU	0.5	ND	U	0.5
1,1,1-TRICHLOROETHANE	ug/L	ND	U	0.5	ND	U	0.5	ND	U	0.5	ND	QU	0.5
1,1,2,2-TETRACHLOROETHANE	ug/L	ND	U	0.5	ND	U	0.5	ND	U	0.5	ND	U	0.5
1,1,2-TRICHLOROETHANE	ug/L	ND	U	0.5	ND	U	0.5	ND	U	0.5	ND	U	0.5
1,1-DICHLOROETHANE	ug/L	ND	U	0.5	ND	U	0.5	ND	U	0.5	ND	U	0.5
1,1-DICHLOROETHENE	ug/L	ND	U	0.5	ND	U	0.5	ND	U	0.5	ND	U	0.5
1,1-DICHLOROPROPENE	ug/L	ND	U	0.5	ND	U	0.5	ND	U	0.5	ND	U	0.5
1,2,3-TRICHLOROBENZENE	ug/L	ND	U	0.5	ND	U	0.5	ND	U	0.5	ND	U	0.5
1,2,3-TRICHLOROPROPANE	ug/L	ND	U	1	ND	U	1	ND	U	1	ND	U	1
1,2,4-TRICHLOROBENZENE	ug/L	ND	U	0.5	ND	U	0.5	ND	U	0.5	ND	U	0.5
1,2,4-TRIMETHYLBENZENE	ug/L	ND	U	0.5	ND	U	0.5	ND	U	0.5	ND	U	0.5
1,2-DIBROMO-3-CHLOROPROPANE	ug/L	ND	U	1	ND	U	1	ND	U	1	ND	U	1
1,2-DIBROMOETHANE	ug/L	ND	U	0.5	ND	U	0.5	ND	U	0.5	ND	U	0.5
1,2-DICHLOROBENZENE	ug/L	ND	U	0.5	ND	U	0.5	ND	U	0.5	ND	U	0.5
1,2-DICHLOROETHANE	ug/L	ND	U	0.5	ND	U	0.5	ND	U	0.5	ND	U	0.5
1,2-DICHLOROPROPANE	ug/L	ND	U	0.5	ND	U	0.5	ND	U	0.5	ND	U	0.5
1,3,5-TRIMETHYLBENZENE	ug/L	ND	U	0.5	ND	U	0.5	ND	U	0.5	ND	U	0.5
1,3-DICHLOROBENZENE	ug/L	ND	U	0.5	ND	U	0.5	ND	U	0.5	ND	U	0.5
1,3-DICHLOROPROPANE	ug/L	ND	U	0.5	ND	U	0.5	ND	U	0.5	ND	U	0.5
1,4-DICHLOROBENZENE	ug/L	ND	U	0.5	ND	U	0.5	ND	U	0.5	ND	U	0.5
2,2-DICHLOROPROPANE	ug/L	ND	U	0.5	ND	XU	0.5	ND	U	0.5	ND	U	0.5
2-BUTANONE	ug/L	ND	U	5	ND	U	5	ND	U	5	ND	U	5
2-CHLOROTOLUENE	ug/L	ND	U	0.5	ND	U	0.5	ND	U	0.5	ND	U	0.5
2-HEXANONE	ug/L	ND	U	2.5	ND	U	2.5	ND	U	2.5	ND	U	2.5
4-CHLOROTOLUENE	ug/L	ND	U	0.5	ND	U	0.5	ND	U	0.5	ND	U	0.5
4-METHYL-2-PENTANONE	ug/L	ND	U	2.5	ND	U	2.5	ND	U	2.5	ND	U	2.5
ACETONE	ug/L	ND	U	5	ND	XU	5	ND	U	5	ND	U	5
BENZENE	ug/L	ND	U	0.5	ND	U	0.5	ND	U	0.5	ND	U	0.5
BROMOBENZENE	ug/L	ND	U	0.5	ND	U	0.5	ND	U	0.5	ND	U	0.5
BROMOCHLOROMETHANE	ug/L	ND	U	0.5	ND	U	0.5	ND	U	0.5	ND	U	0.5

Attachment B-Groundwater Analyses
(for well cluster near proposed new extraction well)

LOCATION_CODE		KAFB-106037 – 47 to 62 ft below water level											
SAMPLE_NO		GW1322			GW1456			GW1588			GW1753		
SAMPLE_DATE		16-Oct-13			27-Jan-14			9-Apr-14			10-Jul-14		
PURP		REG			REG			REG			REG		
Test Group	Units	Result	Qual	LOD	Result	Qual	LOD	Result	Qual	LOD	Result	Qual	LOD
BROMODICHLOROMETHANE	ug/L	ND	U	0.5	ND	U	0.5	ND	U	0.5	ND	U	0.5
BROMOFORM	ug/L	ND	U	0.5	ND	U	0.5	ND	XU	0.5	ND	QU	0.5
BROMOMETHANE	ug/L	ND	U	1	ND	U	1	ND	U	1	ND	U	1
CARBON DISULFIDE	ug/L	ND	U	0.5	ND	U	0.5	ND	U	0.5	ND	U	0.5
CARBON TETRACHLORIDE	ug/L	ND	U	0.5	ND	U	0.5	ND	U	0.5	ND	QU	0.5
CHLOROBENZENE	ug/L	ND	U	0.5	ND	U	0.5	ND	U	0.5	ND	U	0.5
CHLOROETHANE	ug/L	ND	U	1	ND	U	1	ND	U	1	ND	U	1
CHLOROFORM	ug/L	ND	U	0.5	ND	U	0.5	ND	U	0.5	ND	U	0.5
CHLOROMETHANE	ug/L	ND	U	0.5	ND	U	0.5	ND	U	0.5	ND	U	0.5
CIS-1,2-DICHLOROETHENE	ug/L	ND	U	0.5	ND	U	0.5	ND	U	0.5	ND	U	0.5
CIS-1,3-DICHLOROPROPENE	ug/L	ND	U	0.5	ND	U	0.5	ND	U	0.5	ND	U	0.5
DIBROMOCHLOROMETHANE	ug/L	ND	U	0.5	ND	U	0.5	ND	U	0.5	ND	U	0.5
DIBROMOMETHANE	ug/L	ND	U	0.5	ND	U	0.5	ND	U	0.5	ND	U	0.5
DICHLORODIFLUOROMETHANE	ug/L	ND	U	1	ND	XU	1	ND	U	1	ND	QU	1
ETHYLBENZENE	ug/L	ND	U	0.5	ND	U	0.5	ND	U	0.5	ND	U	0.5
HEXACHLOROBUTADIENE	ug/L	ND	U	0.5	ND	U	0.5	ND	U	0.5	ND	U	0.5
ISOPROPYLBENZENE	ug/L	ND	U	0.5	ND	U	0.5	ND	XU	0.5	ND	U	0.5
METHYL TERT-BUTYL ETHER	ug/L	ND	U	0.5	ND	U	0.5	ND	U	0.5	ND	U	0.5
METHYLENE CHLORIDE	ug/L	ND	U	1	ND	U	1	ND	U	1	ND	U	1
NAPHTHALENE	ug/L	ND	U	0.5	ND	U	0.5	ND	U	0.5	ND	U	0.5
N-BUTYLBENZENE	ug/L	ND	U	0.5	ND	U	0.5	ND	U	0.5	ND	U	0.5
N-PROPYLBENZENE	ug/L	ND	U	0.5	ND	U	0.5	ND	U	0.5	ND	U	0.5
P-ISOPROPYLTOLUENE	ug/L	ND	U	0.5	ND	U	0.5	ND	U	0.5	ND	U	0.5
SEC-BUTYLBENZENE	ug/L	ND	U	0.5	ND	U	0.5	ND	U	0.5	ND	U	0.5
STYRENE	ug/L	ND	U	0.5	ND	U	0.5	ND	XU	0.5	ND	U	0.5
TERT-BUTYLBENZENE	ug/L	ND	U	0.5	ND	U	0.5	ND	U	0.5	ND	U	0.5
TETRACHLOROETHENE	ug/L	ND	U	0.5	ND	U	0.5	ND	XU	0.5	ND	U	0.5
TOLUENE	ug/L	ND	U	0.5	ND	U	0.5	ND	U	0.5	ND	U	0.5
TRANS-1,2-DICHLOROETHENE	ug/L	ND	U	0.5	ND	U	0.5	ND	U	0.5	ND	U	0.5
TRANS-1,3-DICHLOROPROPENE	ug/L	ND	U	0.5	ND	U	0.5	ND	U	0.5	ND	U	0.5
TRICHLOROETHENE	ug/L	ND	U	0.5	ND	U	0.5	ND	U	0.5	ND	U	0.5
TRICHLOROFLUOROMETHANE	ug/L	ND	U	1	ND	U	1	ND	U	1	ND	QU	1
VINYL CHLORIDE	ug/L	ND	U	0.5	ND	U	0.5	ND	U	0.5	ND	QU	0.5
XYLENES	ug/L	ND	U	1.5	ND	U	1.5	ND	U	1.5	ND	U	1.5

CARBON ADSORBER DESIGN CALCULATION

Project Title:	**Mid-Plume Pump and Treat System, Kirtland Air Force Base, New Mexico**	**Document Number:**	**140705-001-PR-CL-40002**
Owner:	**Process Engineering**	**Revision:**	**0**

Attachment C:

Design recommendations for activated carbon

THIS PAGE INTENTIONALLY LEFT BLANK

SIEMENS

"Rules of Thumb"

The following general observations offer guidelines for applying activated carbon for the adsorption of organic compounds in both liquid phase and gas phase applications. These "Rules of Thumb" should only be used as guidelines as situations that lie outside of the suggested boundary conditions may be acceptable, safe and economic under a specific set of conditions.

Gas Phase Adsorption Applications

➢Influent gas temperatures to a carbon bed should not exceed 120°F

- Higher temperatures will significantly reduce the carbon's adsorption capacity
- May cause damage to PVC internals
- May make bed hot spots and bed fires more likely

➢The total influent VOC concentration should not exceed 25% of the L.E.L. (lower explosive limit) for the compounds being adsorbed

- If influent concentrations exceed these levels, dilution air should be used

➢A good design superficial velocity for a gas phase adsorber should be between 40 – 60 fpm

- Depending on operating conditions and concentrations, a range of superficial velocities from 20 to 80 would be acceptable

➢When the influent VOC concentration exceeds 5,000 ppmv, superficial velocities <20 fpm should be avoided

➢For up flow operation, a superficial velocity of >80 fpm should be avoided to prevent bed expansion, carbon particle movement and bed "burping"

➢If ketones and similarly reactive organics are being adsorbed, intermittent and low flow conditions should be avoided

➢The use of impregnated carbons where low flow and intermittent flow conditions exist should be avoided

➢When ketones are being adsorbed and a bed hot spot develops, oxidation of the ketones on the carbon surface will take place before the carbon itself begins to burn and will result in the formation of thousands of ppms of carbon monoxide (CO)

- This formation of carbon monoxide allows a CO monitor to be used as a sensitive indicator of a bed hot spot problem

➢If high VOC concentrations are being adsorbed under low flow rate conditions, 15 to 25% water (based on carbon weight) should be added to the bed to prevent an excessive temperature rise within the carbon's principle mass transfer zone

➢When adsorbing low to moderate VOC concentrations, the relative humidity of the influent gas should be controlled so that it is less than 50%

➢The GAC loading capacities of organic compounds that have large Henry's Constants are more adversely affected by high relative humidity than are organic compounds that have small values for their Henry's Constant

- As an example, in going from a relative humidity of 50% to 95% at 10 ppmv and 90 ^{o}F, the GAC loading capacity for benzene (Henry's Constant ~ 400 atm) decreases by a factor of 2.5 while the GAC loading for hexane (Henry's Constant ~ 48,000 atm) decreases by a factor of 5.

➢In general an adsorber operating at 95% RH will require the use of 2 – 3 times more carbon when compared to an adsorber seeing the same influent VOC concentrations but operating at 40% RH

➢A reduction in the relative humidity of an air stream from >95% to <40% can be achieved by heating the air by 25 – 30 ^{o}F

➢Operating two adsorbers in a series configuration (lead/lag operation) can result in a reduction in GAC usage rates of 20 – 40% when compared to using a single adsorber

Liquid Phase Adsorption Applications

➢In order to minimize channeling, up flow operation should be used when the influent water flow rate is less than 10% of a vessel's design flow rate

- In low flow situations where there is not a significant bed pressure drop, up flow will give the best distribution of water and will significantly reduce the chances of channeling

➢Conditions for channeling and premature breakthrough during the operation of a liquid phase adsorber increase rapidly as the pressure drop across the carbon bed approaches zero

- Hydraulic loadings of <1 gpm/ft^2 do not result in a significant pressure drops across beds of 8x30 or 12x40 mesh carbons, making them susceptible to channeling

➢At ambient temperatures, a minimum soak time for a carbon bed during startup of 24 hours is required to assure >90% of a carbon's surface area is available for adsorption

➢During startup, a GAC bed that is not backwashed or back flushed after initial soaking is likely to show flow abnormalities and premature contaminant breakthrough when put into service

➢A single GAC adsorber should not be operated at an empty bed contact time (EBCT) that is less than 5 minutes

- Short contact times can lead to poor carbon utilization and early contaminant breakthrough

➢Shortening of the empty bed contact time (increasing the water flow rate) will increase the length of the mass transfer zone (MTZ) for the compounds of interest and can significantly increase GAC usage rates

➢The following are minimum suitable per vessel EBCTs for the adsorption of the listed compounds:

- BTEX - 5 to 8 minutes
- THMs - 8 to 10 minutes
- MTBE - 10 to 15 minutes – EDB not as bad as MTBE
- chlorine - 5 to 8 minutes
- chloramines - 10 to 15 minutes or longer

➢Suitable hydraulic loadings for liquid phase vessels can range from 1.5 to 9 gpm/ft^2

➢Hydraulic loadings of 3.5 to 5.0 are good design values with respect to minimizing GAC usage rates

➢Both hydraulic loading (HL) and empty bed contact time (EBCT) should be considered together when defining the operation of a liquid phase carbon adsorber

System Operation

➢For water flowing through a pipe, fluid velocities up to 5 – 6 feet/second are acceptable

- Fluid velocities of 7 to 10 feet/second are acceptable if pressure drop is not an issue

➢For sizing of ducts used in vapor phase applications, gas velocities of 3000 – 5000 fpm are acceptable

Shealy, Stuart

From: John Sherbondy <jsherbondy@tigg.com>
Sent: Monday, March 09, 2015 11:28 AM
To: Shealy, Stuart
Subject: RE: Design parameters for EDB removal

Stuart,

Responses in order:

8 to 10 min OK

1) This is fair, leaning higher as the usage rate increases, generally. We assume a mass transfer zone of about 6 minutes which leaves in this case 2-4 minutes worth of carbon for saturation.
2) We have run at 0.5 gpm/ft2 in our CP style vessels but prefer to be at 1 or higher. The only reason we go that low is the fact that we have an inlet distributor as well as a collector. If just using liquid head to distribute flow would not go below 1 gpm/ft2.

1 gpm/ft^2 OK

I am assuming this discussion is not for Kirtland as we are well above the contact time and flow velocity figures with our design.

John Sherbondy
Account Manager
Office: 800-925-0011 x102
Mobile: 412-720-4897

Learn How to Get the Most From Your Vessel's Activated Carbon Bed

www.TIGG.com

CONFIDENTIALITY NOTICE: The information contained in this transmission may be confidential or privileged, and is intended solely for the entity or individual to whom it is addressed. If you are not the intended recipient, please be advised that any use, copying, disclosure, dissemination or distribution is strictly prohibited. If you received this transmission in error, please contact the sender at TIGG Corporation immediately by replying to this email and deleting it from your computer.

From: Shealy, Stuart [mailto:Stuart.Shealy@CBIFederalServices.com]
Sent: Monday, March 09, 2015 11:19 AM
To: John Sherbondy
Subject: Design parameters for EDB removal

John

A couple of things I wanted to confirm.

1) I have typically used an empty bed contact time of 8 to 10 minutes to achieve 98 to 99% removal of EDB from groundwater. Does that fit with your expectation ?

2) Typically have tried to get minimum superficial velocity of 1.5 gpm/ft2 to ensure good water distribution through carbon bed. Can I go a little lower if I have to ?

Thanks

stuart

Stuart E. Shealy, PE
Senior Process Engineer 3
Technical Services
CB&I Federal Services
Tel: 865-694-7447
Cell: 865-661-7328
Stuart.shealy@cbifederalservices.com

CB&I Federal Services
312 Directors Drive
Knoxville, TN 37923
www.cbi.com

This e-mail and any attached files may contain CB&I Federal Services LLC (or its affiliates) confidential and privileged information. This information is protected by law and/or agreements between CB&I Federal Services LLC (or its affiliates) and either you, your employer or any contract provider with which you or your employer are associated. If you are not an intended recipient, please contact the sender by reply e-mail and delete all copies of this e-mail; further, you are notified that disclosing, copying, distributing or taking any action in reliance on the contents of this information is strictly prohibited.

THIS PAGE INTENTIONALLY LEFT BLANK

CARBON ADSORBER DESIGN CALCULATION

Project Title:	**Mid-Plume Pump and Treat System, Kirtland Air Force Base, New Mexico**	**Document Number:**	**140705-001-PR-CL-40002**
Owner:	**Process Engineering**	**Revision:**	**0**

Attachment D:

Tigg submittals on activated carbon

and carbon adsorbers

THIS PAGE INTENTIONALLY LEFT BLANK

TIGG 5DC 1240

Virgin Liquid Phase Coconut Based Activated Carbon

www.TIGG.com

DESCRIPTION

TIGG 5DC 1240 is a coconut-based activated carbon specially designed to remove low concentrations of weakly adsorbed organics from water. This activated carbon combines higher than usual microporosity with sufficient transport pores to permit superior loadings of highly soluble organics.

TYPICAL PROPERTIES	TIGG 5DC 1240
U.S Sieve, 90 wt% min	12 x 40
Iodine Number, mg/g, min	1050
Apparent Density, (dense packing)	
g/cc	0.47 - 0.52
lbs/ft^3	29 - 32 ws c 30
Abrasion No. - min	85

TYPICAL APPLICATIONS

This activated carbon is more cost effective than standard liquid phase carbons in removing highly soluble organics such as methyl tertiary butyl ether (MTBE) and tertiary butyl alcohol (TBA) from water. This carbon is typically employed in an adsorber downstream of TIGG 5D 1240 or other TIGG liquid phase adsorbent which exhibits broad-spectrum purification ability.

Standard packaging of the activated carbon is in 55 pound pags or 1100 pound supersaks.

Wet drained activated carbon adsorbs oxygen from the air. Therefore, when workers need to enter a vessel containing wet activated carbon, they should follow confined space/low oxygen level procedures. Activated carbon dust does not present an explosion hazard.

800-925-0011
www.TIGG.com
www.TIGGtanks.com

TIGG Corporation
1 Willow Avenue
Oakdale, PA 15071

TIGG Corporation
Purifying Air & Water

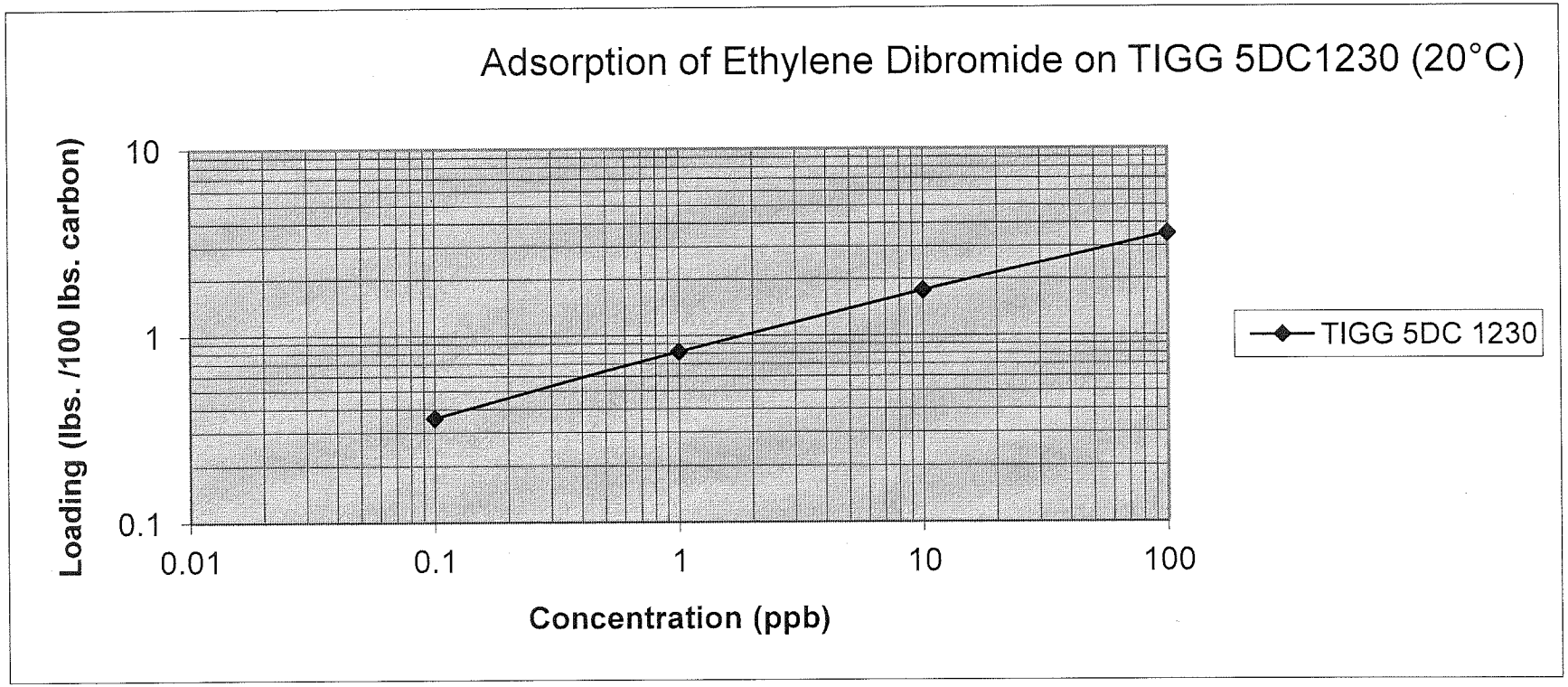
Adsorption of Ethylene Dibromide on TIGG 5DC1230 (20°C)
Loading (lbs. /100 lbs. carbon)
10
1
0.1
0.01
0.1
1
10
100
Concentration (ppb)
TIGG 5DC 1230

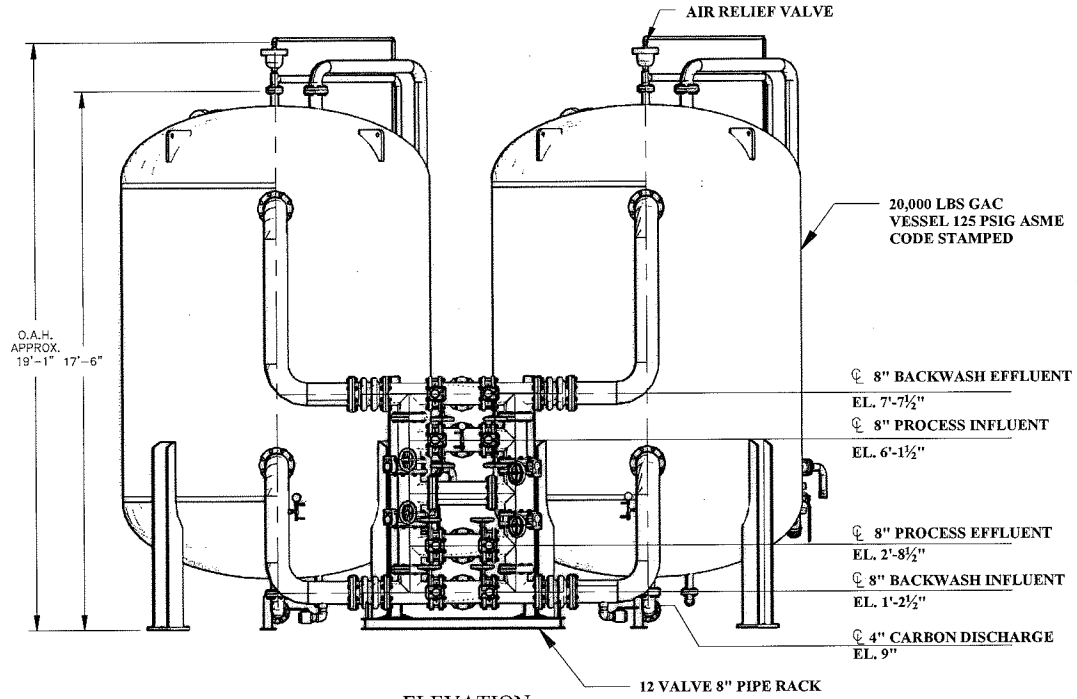

ELEVATION

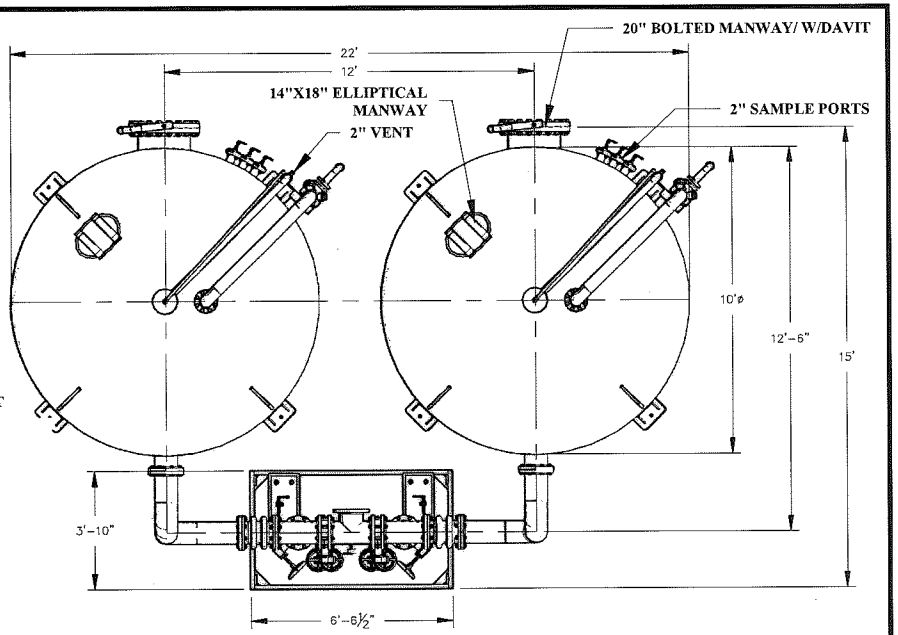

PLAN

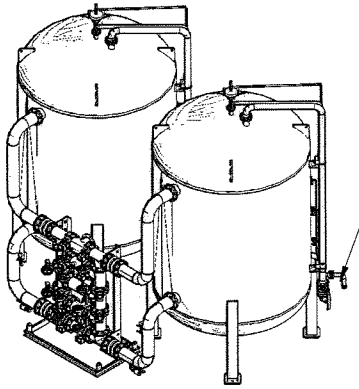

FOR REFERENCE ONLY

NO.	REVISION	BY	DATE
1	ADD SAMPLE PORTS TO VESSEL	RC	12/19/12

PROJECT
CP-20K-10
(SYSTEM)

PROJ. NO.	SALES
P.O. NO.	

THIS DRAWING AND DESIGN ARE THE PROPERTY OF TIGG CORP. AND SHALL NOT BE REPRODUCED IN WHOLE OR IN PART NOR BE EMPLOYED FOR WORK PURPOSES EXCEPT WHEN EXPLICITLY PERMITTED IN WRITING BY TIGG CORP. THIS DRAWING LOANED SUBJECT TO RETURN ON DEMAND.

DRAWN BY	JB
DESIGN BY	JB
CHKD. BY	BB
DATE	2/9/10
SCALE	NTS

TIGG corporation

SYSTEM GENERAL ARRANGEMENT

DWG. NO. CP-20K-10-1003 REV. 1

MARK	SERVICE	DESCRIPTION	LOCATION
N9	SAMPLE	2" 150# FFSO FLANGE	SHELL
N8	SAMPLE	2" 150# FFSO FLANGE	SHELL
N7	SAMPLE	2" 150# FFSO FLANGE	SHELL
N6	AIR RELIEF	2" 150# FFSO FLANGE	TOP HEAD
N5	DRAIN	2" 150# FFSO FLANGE	BOTTOM HEAD
N4	CARBON DISCHARGE	4" 150# FFSO FLANGE	BOTTOM HEAD
N3	CARBON FILL/PRES. RELIEF	4" 150# FFSO FLANGE	TOP HEAD
N2	OUTLET	8" 150# FFSO FLANGE	SHELL
N1	INLET	8" 150# FFSO FLANGE	SHELL
M2	MANWAY	20" 150# FFSO W/ DAVIT	SHELL
M1	MANWAY	14"x18" ELL. MANWAY	TOP HEAD

NOZZLE SCHEDULE

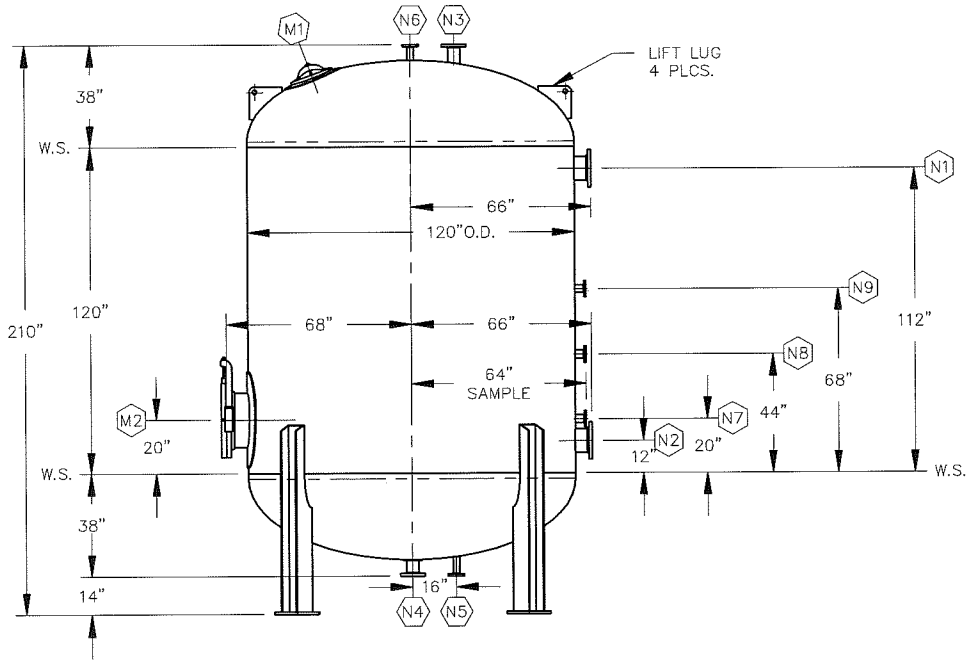

ELEVATION

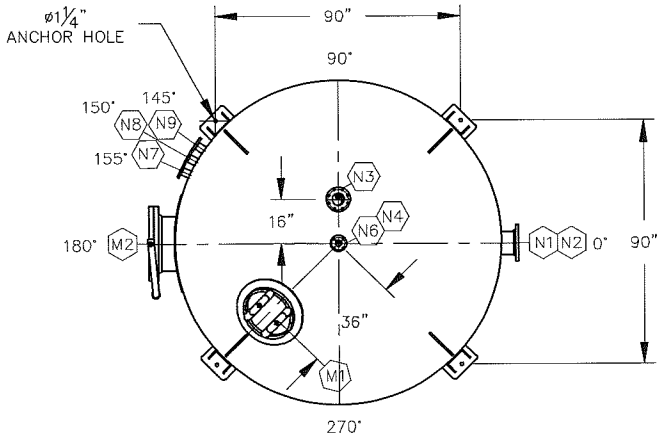

PLAN

NO.	REVISION	BY	DATE
3	UPDATE VESSEL STANDARDS	RC	5/1/13
2	ADD SAMPLE PORTS	RC	11/15/12
1	REVISE FLANGE TYPE & LINING	JB	7/5/11

VESSEL STANDARDS

VESSEL MATERIALS : SA-516-70	VESSEL ACCESS : 20" BOLTED MANWAY W/ DAVIT
LINING : NSF APPROVED VINYL ESTER	LIQUID DRAIN ASSEMBLY : 2" 150# FFSO FLANGE
EXTERIOR PAINT : EPOXY BASE / URETHANE TOP COAT	TOTAL VOLUME : 1055 FT^3
HEAD THICKNESS : ½" NOM.	SHIP WT. EMPTY : 11783 LBS
SHELL THICKNESS : ½" NOM.	MAX. OPERATING PRESSURE : 125 PSIG/-15 PSIG (VAC.)
INTERNALS : STAINLESS STEEL	MAX. OPERATING TEMPERATURE. : 150°F

PROJECT

CP-20K-10

PROJ. NO. SALES

P.O. NO.

THIS DRAWING AND DESIGN ARE THE PROPERTY OF TIGG CORP. AND SHALL NOT BE REPRODUCED IN WHOLE OR IN PART, NOR EMPLOYED FOR ANY PURPOSE OTHER THAN SPECIFICALLY PERMITTED IN WRITING BY TIGG CORP. THIS DRAWING LOANED SUBJECT TO RETURN ON DEMAND.

DRAWN BY	JB
DESIGN BY	BB
CHKD. BY	BB
DATE	2/28/11
SCALE	NTS

TIGG corporation

PLAN & ELEVATION

CP-20K-10-1001 REV. 3

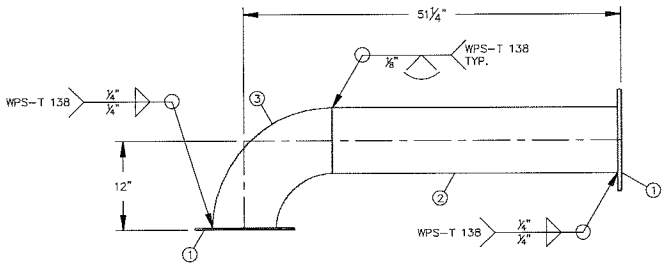

DISCHARGE FLANGE CONNECTION

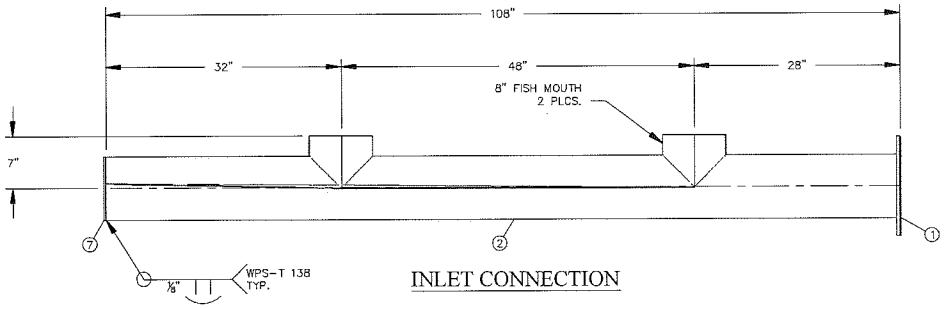

INLET CONNECTION

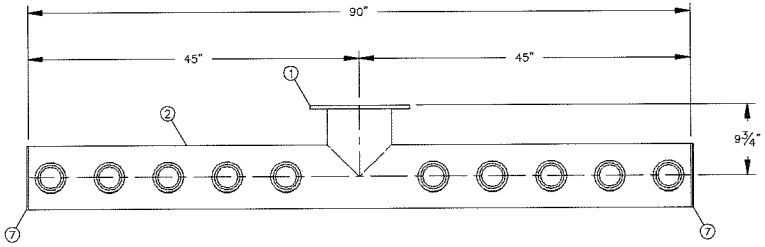

DISCHARGE LATERAL CONNECTION

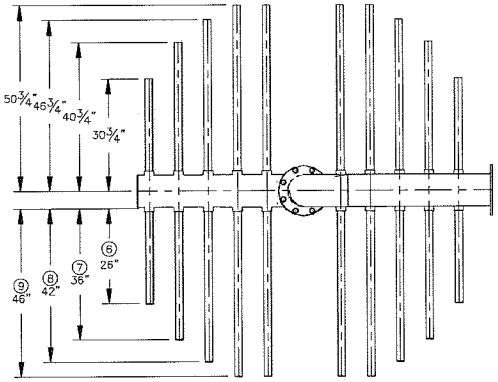

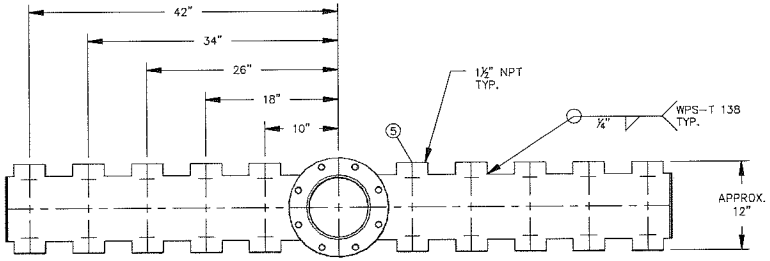

DISCHARGE LATERAL CONNECTION

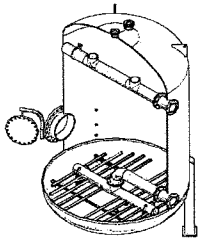

ITEM	QTY.	DESCRIPTION	MATERIAL
	1	8" U-BOLT	304SS
	20	1½" U-BOLT	304SS
	48	¾"ø WASHER	304SS
	24	¾"ø HEAVY HEX NUT	18-8 OR BETTER
	24	¾"øx2" BOLT	18-8 OR BETTER
	3	8" 150# FULL FACE GASKET	NEOPRENE
9	8	1½" WEDGE WIRE 0.010"SLOTTED PIPE 46" LONG	SA-182 304L
8	4	1½" WEDGE WIRE 0.010"SLOTTED PIPE 42" LONG	SA-182 304L
7	4	1½" WEDGE WIRE 0.010"SLOTTED PIPE 36" LONG	SA-182 304L
6	4	1½" WEDGE WIRE 0.010"SLOTTED PIPE 26" LONG	SA-182 304L
5	20	1½" NPT 3000# HALF COUPLING	SA-182 304L
4	3	8⅝"øx½" END PLATE	SA-240 304L
3	1	8" SCH 10 90° LR ELBOW	SA-312 304L
2	22'	8" SCH 10 PIPE	SA-312 304L
1	4	8" 150# FABRICATED FLANGE ½" TK.	SA-240 304L

BILL OF MATERIALS

NO.	REVISION	BY	DATE

RELEASED FOR FABRICATION

PROJECT

CP-20K-10

PROJ. NO.	PLANT STANDARDS
P.O. NO.	
DRAWN BY	JB
DESIGN BY	BB
CHKD. BY	
DATE	3/11/11
SCALE	NTS

THIS DRAWING AND DESIGN ARE THE PROPERTY OF TIGG CORP. WITHIN 304 IN ITAR 1.105 IS EXCLUDED FOR USING PURPOSE OTHER THAN SPECIFICALLY PERMITTED BY WRITTEN BY TIGG CORP. THIS DRAWING IS SUBJECT TO RETURN ON DEMAND.

TIGG corporation

VESSEL INTERNALS
(STAINLESS STEEL)

DWG. NO. CP-20K-10-2004(SS) REV. 0

CP20K-10 System Pressure Drop

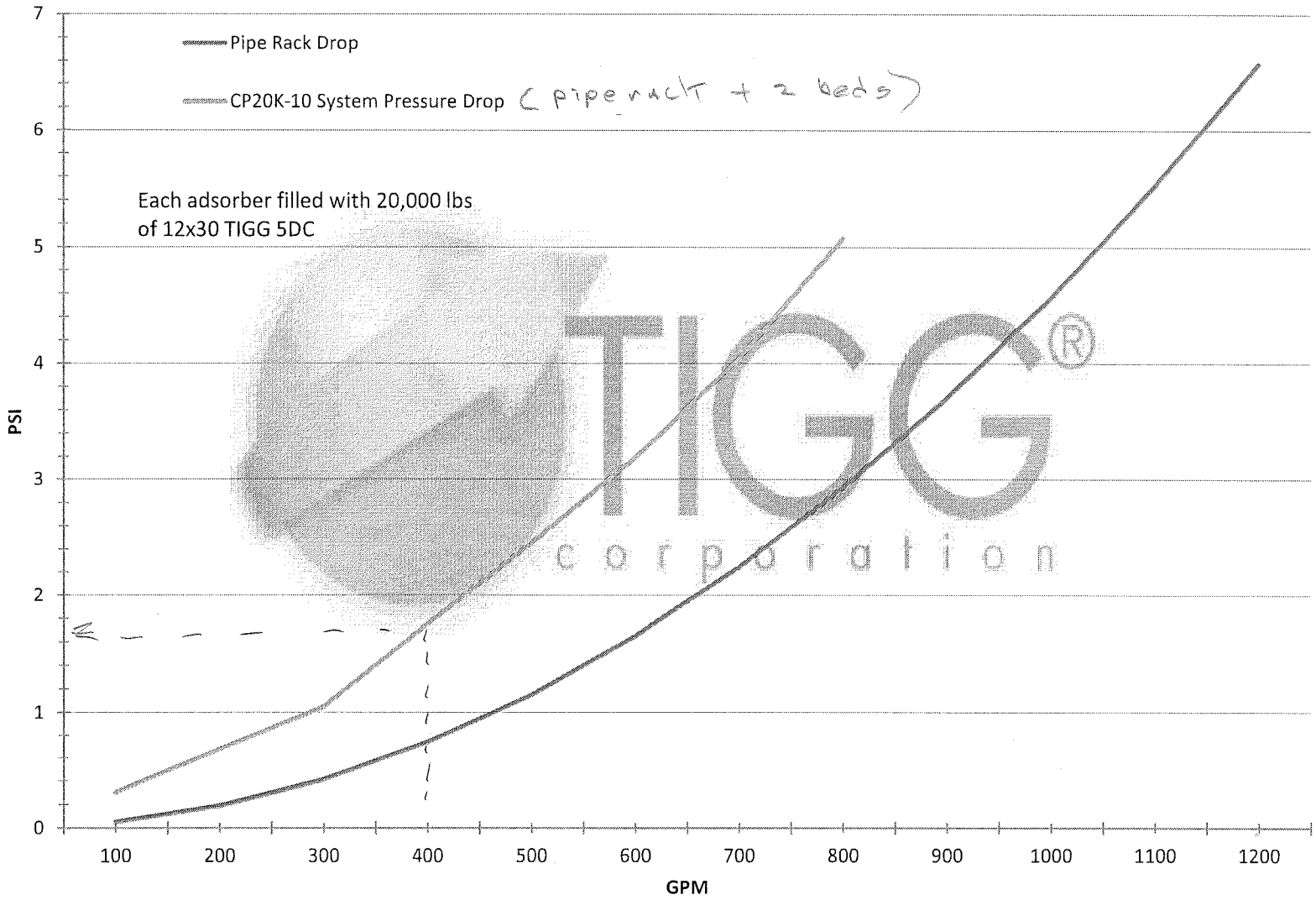

CARBON ADSORBER DESIGN CALCULATION

Project Title:	**Mid-Plume Pump and Treat System, Kirtland Air Force Base, New Mexico**	**Document Number:**	**140705-001-PR-CL-40002**
Owner:	**Process Engineering**	**Revision:**	**0**

Attachment E:

Spreadsheet – carbon adsorber calculations

THIS PAGE INTENTIONALLY LEFT BLANK

Carbon Treatment Calculations
Kirtland BFF Mid Plume Interim Measure

Calculate carbon volume needed to provide adequate contact time to remove EDB to low levels.

Flow rate, gpm	400	
Contact time, minutes	12	from assumptions
Carbon density, lb/ft3	30	
Carbon volume, ft3	642	
Carbon weight, lb	**19,251**	

Calculate bed velocity in Carbon bed

Based on needing 20,000 lbs of carbon, use a 10-ft diameter adsorber

Flow rate, gpm	100	200	400
bed diameter, ft	10	10	10
Cross-sectional area, t2	78.54	78.54	78.54
hydraulic loading, gpm/ft2	1.27	2.55	5.09

loading exceeds minimum criteria of 1.0 gpm/ft2 at minimum groundwater flow of of 100 gpm.
At 400 gpm (max flow) loading is 5.1, which is good

Calculate estimated carbon consumption using loading data for EDB on carbon vs inlet concentration.

EDB Loading from Tigg

conc, ug/L	loading g EDB/g carbon
0.1	0.0036
1	0.0082
10	0.018

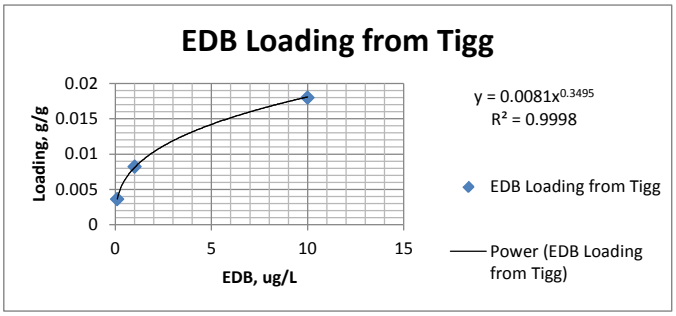

Carbon usage

EDB conc in GW, ug/L	2	1.5	1	0.5
loading from Tigg correllation, g EDB/g carbon	0.0103	0.0093	0.0081	0.0064
flow, gpm	400	400	400	400
EDB, lb/day	0.0096	0.0072	0.0048	0.0024
Isotherm loading correction factor	0.6	0.6	0.6	0.6
Estimated carbon loading g EDB/ g carbon	0.0062	0.0056	0.0049	0.0038
carbon, lb/day	1.6	1.3	1.0	0.6
carbon, lb/month	47	39	30	19
carbon, lb/year	567	470	361	230

THIS PAGE INTENTIONALLY LEFT BLANK

APPENDIX I

GWTS Operations Log Sheets and Record Forms

THIS PAGE INTENTIONALLY LEFT BLANK

Daily and Weekly Inspection Log for the Kirtland AFB GWTS

Well	Location	Item	Normal Range	Recordation Frequency	Monday __/____/___	Tuesday __/____/___	Wednesday __/____/___	Thursday __/____/___	Friday __/____/___	Saturday __/____/___	Sunday __/____/___
Well KAFB-106228 (Church Lot)	HMI	GW flow FIT-3001, (gpm)	0-200 gpm	Daily							
		Totalizer, FIT-3001, (1000 gal)		Daily							
		Transducer, ft below measuring point		Daily							
	Well vault	Wellhead Pressure, (psig)	< 150 psig	Weekly							
		GW flow FIT-3001, (gpm)		Weekly							
		Temperature, (F)		Weekly							
Well KAFB-106233 (California)	HMI	GW flow FT-7001, (gpm)	0-200 gpm	Daily							
		Totalizer, FQI-7001, (1000 gal)		Daily							
		Transducer, ft below measuring point		Daily							
	Well Control House	Wellhead Pressure, (psig)	< 150 psig	Weekly							
		GW flow FI-7001, (gpm)		Weekly							
	Well vault	Wellhead Pressure, (psig)	< 150 psig	Monthly							
Well KAFB-106234 (Anderson)	HMI	GW flow FI-7034, (gpm)	0-200 gpm	Daily							
		Totalizer, FQI-7002, (1000 gal)		Daily							
		Transducer, ft below measuring point		Daily							
	Well Control House	Wellhead Pressure, (psig)	< 150 psig	Weekly							
		GW flow FI-7002, (gpm)		Weekly							
	Well vault	Wellhead Pressure, (psig)	< 150 psig	Monthly							
Well Control House	Well Control House	Effluent Line Pressure, PI-7005	< 150 psig	Weekly							
Influent Pump Skid	Pump Skid (Influent)	Inlet pressure pump skid, PI-3102, (psig)	< 60 psig	Daily							
		Bag filter differential pressure F112A, PDI-3102A	<15 psid	Daily							
		Bag filter differential pressure F112B, PDI-3102B	<15 psid	Daily							
		Outlet pressure pump skid, PI-3103, (psig)	< 60 psig	Daily							
		GW flow, (gpm)	0-500 gpm	Daily							
		Totalizer (gal)		Daily							
	HMI	GW flow, (gpm)	0-500 gpm	Daily							
		Totalizer, (1000 gal)		Daily							
	Bag Filters	Bag filters changed?	yes/no	Daily							
GACs	GAC Drain Mode	V-116A Pressure, PI-3104A, (psig)	0-20 psig	Daily							
		Between Tanks, PI-3105, (psig)	0-20 psig	Daily							
		V-116B Pressure, PI-3104B, (psig)	0-20 psig	Daily							
	Lead/Lag	Which Tank is Lead?	V116X	Daily							
		Which Tank is Lag?	V116X	Daily							
	GAC Fill Mode	V-116A Pressure, PI-3104A, (psig)	0-20 psig	Daily							
		Between Tanks, PI-3105, (psig)	0-20 psig	Daily							
		V-116B Pressure, PI-3104B, (psig)	0-20 psig	Daily							
	HMI	GW flow, FIT 3102 (gpm)	0-500 gpm	Daily							
		Totalizer, FIT 3102 (gal)		Daily							
Effluent Pump Skid	Pump Skid (Effluent)	Inlet press. pump skid, PI-3108, (psig)	< 60 psig	Daily							
		Bag filter diff. press., PI-3102, F-118A, PDI-3108A	<15 psid	Daily							
		Bag filter diff. press., PI-3103, F-118B, PDI-3108B	<15 psid	Daily							
		Outlet press. pump tree, PI-3102, (psig)	< 60 psig	Daily							
		GW flow, (gpm)	0-500 gpm	Daily							
		Totalizer, (gal)		Daily							
	HMI	GW flow, (gpm)	0-500 gpm	Daily							
		Totalizer, (1000 gal)		Daily							
Injection Well 7	Well head	Totalizer, (1000 gal)		Weekly*							
	HMI	Pressure, (psig)	0-120 psig	Daily							
		Transducer, ft below measuring point	ft	Daily							
Golf Course Pond	HMI	Pond Level, (ft)	0.7-3.5 ft	Daily							

* The Injection Well 7 Totalizer reading should be recorded on switch over days too.

THIS PAGE INTENTIONALLY LEFT BLANK

Form 10
Monthly Flow Meter Inspection
Kirtland AFB MPPTS

Monthly Inspection Log (see note 1)

date/inspected by	FIT-3001	FIT-7001	FIT-7002	FIT-3102	FIT-3108	FIT-3120	Well 7	
Flow reading operational								
PLC totalizer functional								
No moisture in readout								
Free of mechanical damage								
Readings consistent with past operations								
date-	FIT-3001	FIT-7001	FIT-7002	FIT-3102	FIT-3108	FIT-3120	Well 7	
Flow reading operational								
PLC totalizer functional								
No moisture in readout								
Free of mechanical damage								
Readings consistent with past operations								
date-	FIT-3001	FIT-7001	FIT-7002	FIT-3102	FIT-3108	FIT-3120	Well 7	
Flow reading operational								
PLC totalizer functional								
No moisture in readout								
Free of mechanical damage								
Readings consistent with past operations								
date-	FIT-3001	FIT-7001	FIT-7002	FIT-3102	FIT-3108	FIT-3120	Well 7	
Flow reading operational								
PLC totalizer functional								
No moisture in readout								
Free of mechanical damage								
Readings consistent with past operations								

Notes:
1) Meters should be removed annually and cleaned to remove build up and deposits from elements.

Meter Locations:

FE/FIT- 3001, located in KAFB-106228 well vault. V-cone meter with differential pressure transmitter. Local display at meter, display and totalizer in HMI. Measures well flow to GWTS.

FE/FIT- 7001, located in well control house. V-cone meter with differential pressure transmitter. Local display at meter, display and totalizer in HMI. Measures flow from KAFB-106233 to GWTS.

FE/FIT- 7002, located in well control house. V-cone meter with differential pressure transmitter. Local display at meter, display and totalizer in HMI. Measures flow from KAFB-106234 to GWTS.

FE/FIT- 3102, located on the feed pump skid in the treatment building. V-cone meter with differential pressure transmitter. Local display at meter, display and totalizer in HMI. Measures flow from feed tank to carbon beds.

FE/FIT- 3108, located on the discharge pump skid in the treatment building. V-cone meter with differential pressure transmitter. Local display at meter, display and totalizer in HMI. Measures flow from treated water tank to discharge line.

FI/FQI- 3120, located on the feed pump skid in the treatment building. Turbine meter (local) with analog flow rate and mechanical totalizer readout in increments of 100 gallons. Measures water volume used for dust control.

FI/FQI- at KAFB well 7, located in existing vault near KAFB 7. Turbine meter (local) with analog flow rate and mechanical totalizer readout in increments of 100 gallons. Measures injection volume into KAFB 7.

Form 10 - Monthly Flow Meter
Maintenance and Inspection
Kirtland AFB GWTS

Date	Flow Meter	Notes

Form 12 Flow Meter Calibration
Kirtland AFB GWTS

flow meter _____

performed by _____

date _____

tank #	start level, %	end level, %	start vol, gal	end vol, gals	delta vol, gals

	Flow reading (HMI), gpm	Flow totalizer reading, gals	Flow reading (local), gpm
start time			
time 2			
time 3			
time 4			
end time			

Elapsed time, minutes	
average meter reading, gpm	
delta totalizer, gal	
flow rate from totalizer, gpm	

Ratio: meter/calc by tank vol	

Ratio: totalizer/calc by tank vol	

Elapsed time, minutes	
flow rate calc from tank volume, gpm	

Notes:

Form 17
Monthly Inspection
Kirtland AFB GWTS

Wellhead Vault KAFB-106228	condition	inspected by	date - time
wellhead vault dry and free of debris			
Air relief valve (ARV-3005) outlet clear			
Pressure in double wall pipe interstitial space (PI-3002) is near zero after vent valve is opened for 2 minutes and then closed.			
Piping, valves and electrical boxes are free of leaks and external corrosion.			
Electrical cables, vault cover and seals intact			
Locks on electrical shed and panels intact			

Valve Vault KAFB-106228 (Louisianna inside base fence)	condition	inspected by	date - time
Vault dry and free of debris			
Air relief valve (ARV-3008) outlet clear			
Pressure in double wall pipe interstitial space (PI-3003) is near zero after vent valve is opened for 2 minutes and then closed.			
Piping, valves and electrical boxes are free of leaks and external corrosion.			
Electrical cables, vault cover and seals intact			

Wellhead Vault KAFB-106233	condition	inspected by	date - time
Vault dry and free of debris			
Air relief valve (ARV-4001) outlet clear			
Pressure in double wall pipe interstitial space (PI-4001) is near zero after vent valve is opened for 2 minutes and then closed.			
Piping, valves and electrical boxes are free of leaks and external corrosion.			
Electrical cables, vault cover and seals intact			

Wellhead Vault KAFB-106234	condition	inspected by	date - time
Vault dry and free of debris			
Air relief valve (ARV-5001) outlet clear			
Pressure in double wall pipe interstitial space (PI-5001) is near zero after vent valve is opened for 2 minutes and then closed.			
Piping, valves and electrical boxes are free of leaks and external corrosion.			
Electrical cables, vault cover and seals intact			

Form 17
Monthly Inspection
Kirtland AFB GWTS

Air Release Valve Vault - Eastern Avenue	condition	inspected by	date - time
wellhead vault dry and free of debris			
Air relief valve (ARV-6001 and ARV-6002) outlets clear			
Piping, valves and electrical boxes are free of leaks and external corrosion.			
Electrical cables intact			
Vault cover and seals intact			

Well Control House (WCH) - Gibson Avenue (inside base fence)	condition	inspected by	date - time
WCH dry and free of debris			
Air relief valve (ARV-3008) outlet clear			
Pressure in double wall pipe interstitial spaces (PI-7001 and PI-7002) is near zero after space is vented at wellhead.			
Piping, valves and electrical boxes are free of leaks and external corrosion.			
Electrical cables intact			

Valve Vault WCH to GWTS (Louisianna inside base fence)	condition	inspected by	date - time
Vault dry and free of debris			
Air relief valve (ARV-8001) outlet clear			
Piping, valves and electrical boxes are free of leaks and external corrosion.			
Electrical cables intact			

Air Relief Valve Vaults on Discharge line (on base)	condition	inspected by	date - time
Vault dry and free of debris			
Air relief valve outlets clear			

KAFB Well 7 Wellhead	condition	by	time
Well 7 flowmeter vault dry and free of debris			
Air relief valve (ARV-9012) outlet clear			
V-Smart valve hydraulic oil reservoir full			
Piping, valves and electrical boxes are free of leaks and external corrosion.			
Electrical cables intact			

Form 18 - Notes
Maintenance and Inspection
Kirtland AFB GWTS

Date	Equipment	notes

Form 19 - Log Sheet
Lock out - Tag out
Kirtland AFB GWTS

Date-time, tagged by:	Equipment	Notes	Date-time, removed by:

THIS PAGE INTENTIONALLY LEFT BLANK

Kirtland AFB GWTS System Shutdown Log

Date of shutdown	Time of shutdown	Date of restart	Time of restart	Was system completely shut down?	If No, which equipment was shut down?	Reason for shutdown
				YES □ NO □		
				YES □ NO □		
				YES □ NO □		
				YES □ NO □		
				YES □ NO □		
				YES □ NO □		
				YES □ NO □		
				YES □ NO □		
				YES □ NO □		
				YES □ NO □		
				YES □ NO □		
				YES □ NO □		
				YES □ NO □		
				YES □ NO □		

THIS PAGE INTENTIONALLY LEFT BLANK

APPENDIX J

Manufacturers' Literature

THIS PAGE INTENTIONALLY LEFT BLANK

FIT-3001 Flow meter for KAFB-106228

Wafer-Cone®

CONFIGURATION SHEET

MODEL VH

Designed for Flanged Pipelines

Patent 5,814,738

DESCRIPTION AND GENERAL PERFORMANCE SPECIFICATIONS

The Wafer-Cone flowmeter is a differential pressure type flow measurement device. A cone is positioned in the center of the pipe to increase the velocity of the flowing fluid and create a differential pressure. This pressure difference can be measured and used to accurately interpret flowrate. Wafer-Cone flowmeters can be ordered with either a flanged transmitter direct mount or threaded taps for remote mounting.

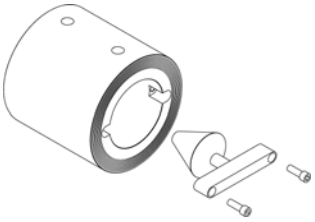

Typical performance specifications:

- Accuracy: ±1.0% of rate *
- Turndown: 10:1
- Repeatability: ±0.1%
- Standard Betas: 0.45 through 0.85
- Headloss: % of Dp, varies with beta ratio
- Installation: 1-3 diameters upstream and 1 diameter downstream

Unique Features:

- No Welding (on remote mount option)
- Interchangeable Wafer-Cone Elements

Options:

- Gas or Oil Flow Calibration

* Each Wafer-Cone is sized for the intended application. Specific performance ratings must be obtained through the sizing process.

MODEL VH

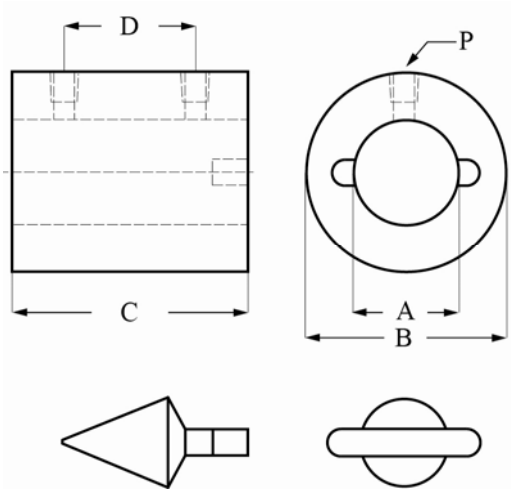

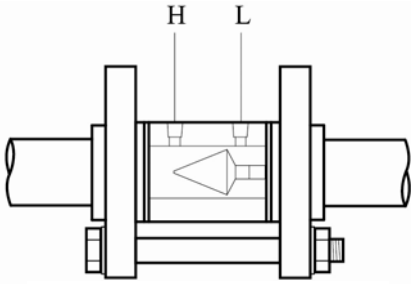

Remote Mount Wafer-Cone

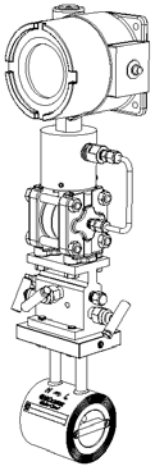

Direct Mount Wafer-Cone

DIMENSION TABLE

	Remote And Direct Mount (Inches)					Remote And Direct Mount (Milimeters)					Pressure Ports	
Model	Size inch	A inch	C inch	D inch	B inch	Size mm	A mm	C mm	D mm	B mm	P NPT inch	P RC inch
VH01	1”	0.957	2.25	1.25	2.00	25	24,31	60	31.8	50.8	1/8	1/8
VH0C	1½”	1.500	3	1.7	2.88	40	38,10	80	43.2	73.5	1/8	1/4
VH02	2”	1.939	3.38	1.88	3.62	50	49,25	85	47.6	91.9	1/4	1/4
VH0D	2½”	2.323	4	2.5	4.12	65	59,00	100	63.5	104.6	1/4	1/4
VH03	3”	2.900	4.75	2.75	5.00	80	73,66	120	69.9	127.0	1/4	1/4
VH04	4”	3.826	6	3.5	6.19	100	97,18	150	88.9	157.2	1/4	1/4
VH06	6”	5.761	9.5	6.0	8.50	150	146,33	240	152.4	215.9	1/4	1/4

*Other sizes, lengths and tap specifications are available.

McCROMETER
www.mccrometer.com

3255 WEST STETSON AVENUE • HEMET, CALIFORNIA 92545 USA

TEL: 951-652-6811 • 800-220-2279 • FAX: 951-652-3078

Printed In The U.S.A Lit. #24509-51 Rev.2.7/04-13

Copyright © 1998-2013 McCrometer, Inc. All printed material should not be changed or altered without permission of McCrometer. Any published pricing, technical data, and instructions are subject to change without notice. Contact your McCrometer representative for current pricing, technical data, and instructions. Hong Kong Patents HK1027622 & HK1066054.

MODEL NUMBER CONFIGURATION VH

Type	Size		Materials		Body Style		Bore		Fittings		Face Style	
VH	3		A		1		S		F		3	
	01	1”	**A**	**S316L Cone**	**1**	**Universal Body Style***	**S**	**Standard**	**N**	**NPT**	**3**	**Serrated**
	0C	1½”	R	CPVC Body	X	Other Style	X	Other	J	RC	2	O-Ring Seal
	02	2”	X	Other Mat. ‡					X	Other	X	Other
	0D	2½”							F	Flanged (direct mount)		
	03	3”										
	04	4”										
	06	6”										

*Universal body used for ANSI 150-2500# Class,DIN 2576, 2633, 2635 and JIS 10K

‡Other materials can include the following:

HASTELLOY C-276	S321H
DUPLEX 2205	INCONEL 625
	PVC

NOTES
1. Bold items in table above are standard construction.
2. Combinations of two different materials can also be specified.
3. Plastic materials limited to sizes 1” to 3”. For other sizes please consult factory.
4. Direct mounting is limited to sizes 1” to 3”. For other sizes please consult factory.

Examples:

Model	Description
VH01-A1SN3	Wafer-Cone 1” line size, S316, ANSI Style, NPT Pressure Ports, Serrated Face
VH02-A1SF3	Wafer-Cone 2” line size, S316, ANSI Style, Transmitter Flanged For Direct mounting, Serrated Face

ABBREVIATION

NPT	National Pipe Taper

Design Pressure Limits

1500 psig: -50F to 600F
103 bar: -46C to 315C
Contact factory if other design limits are required.

Technical questions can be answered through a local representative or through our application engineers.

MANUFACTURING STANDARDS

Specific customer requirements can be complied with upon request.

Each meter is shipped with a centering device.

Non-destructive testing can include:

- Hydrostatic Pressure Testing
- Positive Material Inspection
- Dye Penetrant Weld Inspection (“F” Fittings Option Only)

ACCESSORIES

- Accessory Kit: gaskets, long bolts, and nuts
- Alternate cone for different flow range/differential.

REPRESENTED BY:

McCROMETER
www.mccrometer.com
3255 WEST STETSON AVENUE • HEMET, CALIFORNIA 92545 USA
TEL: 951-652-6811 • 800-220-2279 • FAX: 951-652-3078
Printed In The U.S.A Lit. #24509-51 Rev.2.7/04-13
Copyright © 1998-2013 McCrometer, Inc. All printed material should not be changed or altered without permission of McCrometer. Any published pricing, technical data, and instructions are subject to change without notice. Contact your McCrometer representative for current pricing, technical data, and instructions. Hong Kong Patents HK1027622 & HK1066054.

FIT-3001 Flow meter for KAFB-106228

V-Cone® Application Sizing

Serial #	15-1854	Fluid	WATER
Tag		Fluid State	LIQUID
P.O. Ref.	462-056614	End User	
Model	VH03-A1SF3	Market	Other
		Application	Other

Mark/App Code ZZZ

Description	Wafer-Cone 3"
Note	

C_d	0.8872	
P_f	150	psiG
T_f	75	°F
ρ	62.13	lb/ft3
μ	0.9353	cP
G		
Z		
Y		
k		
C_P		
Mw	18.015	
P_b		
T_b		
Z_b		
P_{atm}	14.696	psi
P_c	3198.8	psi
T_c	705.16	°F
F_a	1.000	
aPE	D 6.7e-06	d 6.7e-06
P_v	0.4302	psi
P_{loss}	2.818	psi

⇐ Entered value.

q	max. Flowrate	250	GPM
Re	max. Reynolds	2.901e+05	
V	max. Velocity	12.14	fps
ΔP	max. Dp	160.16	inWC
ΔP	min. Dp	1.6016	inWC
D	Meter I.D.	2.9000	in
d	Cone O.D.	2.2038	in
β	Beta Ratio	0.6500	
	Turn Down	10	

McCrometer Eng. AlBa

	Re	Cd	Velocity fps	Gas. Exp. Y	ΔP inWC	Flowrate GPM
1	2.901e+05	0.8872	12.14		160.16	250.00
2	2.611e+05	0.8872	10.93		129.73	225.00
3	2.321e+05	0.8872	9.715		102.50	200.00
4	2.031e+05	0.8872	8.500		78.479	175.00
5	1.741e+05	0.8872	7.286		57.658	150.00
6	1.451e+05	0.8872	6.072		40.041	125.00
7	1.160e+05	0.8872	4.857		25.625	100.00
8	8.703e+04	0.8872	3.643		14.415	75.000
9	5.802e+04	0.8872	2.429		6.4065	50.000
10	2.901e+04	0.8872	1.214		1.6016	25.000

Table based on one flow condition (P, T ,Z , k ...) V40 Version 2.0

Record Start Date	6/16/2015
Print Date	07-09-2015

McCROMETER

TAG: FIT-3001

© Siemens AG 2009

VERIFY MEETS BUY AMERICA

Overview

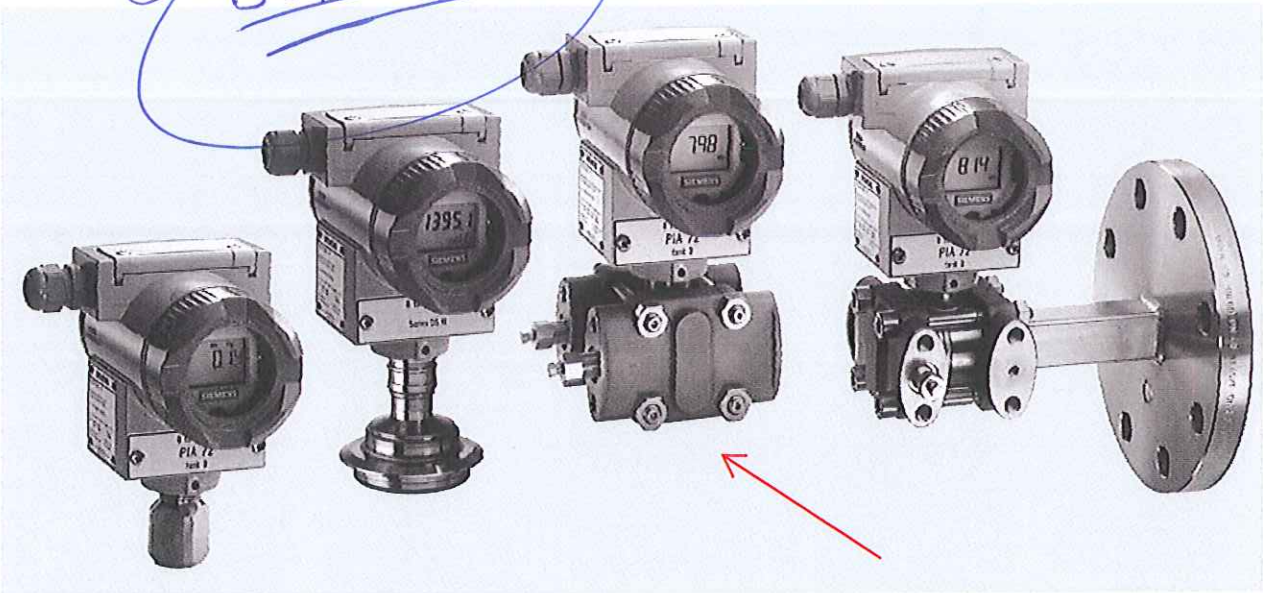

SITRANS P pressure transmitters, DS III series, are digital pressure transmitters featuring extensive user-friendliness and high accuracy. The parameterization is performed using control keys, over HART communication, PROFIBUS-PA or FOUNDATION Fieldbus interface.

Extensive functionality enables the pressure transmitter to be precisely adapted to the plant's requirements. Operation is very simple in spite of the numerous setting options.

Transmitters with type of protection "Intrinsic safety" and "Explosion-proof" may be installed within potentially explosive atmospheres (zone 1) or in zone 0. The transmitters are provided with an EC type examination certificate and comply with the corresponding harmonized European standards (ATEX).

The transmitters can be equipped with various designs of remote seals for special applications such as the measurement of highly viscous substances.

Various versions of the DS III pressure transmitters are available for measuring:

- Gauge pressure
- Absolute pressure
- For differential pressure transmitters
- Filling level
- Mass level
- Volume level
- Volume flow
- Mass flow

Benefits

- High quality and long life
- High reliability even under extreme chemical and mechanical loads
- For aggressive and non-aggressive gases, vapors and liquids
- Extensive diagnosis and simulation functions
- Separate replacement of measuring cell and electronics without recalibration
- Minimum conformity error
- Small long-term drift
- Wetted parts made of high-grade materials (e.g. stainless steel, Hastelloy, gold, Monel, tantalum)
- Infinitely adjustable span from 0.01 bar to 700 bar (0.15 psi to 10153 psi) for DS III with HART communication
- Nominal measuring range from 1 bar to 700 bar (14.5 psi to 10153 psi) for DS III PA (PROFIBUS PA) and FF (FOUNDATION Fieldbus)
- High measuring accuracy
- Parameterization over control keys and HART communication, PROFIBUS PA communication or FOUNDATION Fieldbus interface.

Application

The pressure transmitters of the DS III series, can be used in industrial areas with extreme chemical and mechanical loads. Electromagnetic compatibility in the range 10 kHz to 1 GHz makes the DS III pressure transmitters suitable for locations with high electromagnetic emissions.

Pressure transmitters with type of protection "Intrinsic safety" and "Explosion-proof" may be installed within potentially explosive atmospheres (zone 1) or in zone 0. The pressure transmitters are provided with an EC type examination certificate and comply with the corresponding harmonized European standards (ATEX).

Pressure transmitters with the type of protection "Intrinsic safety" for use in zone 0 may be operated with power supply units of category "ia" and "ib".

The transmitters can be equipped with various designs of remote seals for special applications such as the measurement of highly viscous substances.

The pressure transmitter can be operated locally over 3 control keys or programmed externally over HART communication or over PROFIBUS PA or FOUNDATION Fieldbus interface.

© Siemens AG 2009

SITRANS P, DS III series, for differential pressure and flow		
	HART	**PROFIBUS PA or FOUNDATION Fieldbus**
• Square-root characteristic (flow 25 ... 50%)		≤ 0,2 %
- r ≤ 10	≤ 0,2 %	-
- 10 < r ≤ 30	≤ 0,4 %	-
Long-term drift (temperature change ± 30 °C (± 54 °F))	≤ (0.25 · r) % every 5 years static pressure max. 70 bar g (1015 psi g)	≤ (0.25 % every 5 years static pressure max. 70 bar g (1015 psi g)
• 20 mbar (0.29 psi)-measuring cell	≤ (0.2 · r) per year	≤ 0.2 per year
Influence of ambient temperature		
• at -10 ... +60 °C (14 ... 140 °F)	≤ (0.08 · r + 0.1) %	≤ 0,3 %
• at -40 ... -10 °C and +60 ... +85 °C (-40 ... +14 °F and 140 ... 185 °F)	≤ (0.1 · r + 0.15) %/10 K (Twice the value with 20-mbar (0.29 psi) measuring cell)	≤ 0.25 %/10 K
Influence of static pressure		
• on the zero point	≤ (0.15 · r) % per 100 bar (1450 psi)	≤ 0.15 % je 100 bar (1450 psi)
- 20 mbar (0.29 psi)-measuring cell	≤ (0.15 · r) % per 32 bar (464 psi)	≤ 0.15 % je 32 bar (464 psi)
• on the span	≤ 0.2 % je 100 bar (1450 psi)	-
- 20 mbar (0.29 psi)-measuring cell	≤ 0.2 % je 32 bar (464 psi)	-
Measured Value Resolution	-	$3 \cdot 10^{-5}$ of nominal measuring range
Rated operating conditions		
Degree of protection (to EN 60529)	IP65	
Process temperature		
• Measuring cell with silicone oil filling	-40 ... +100 °C (-40 ... +212 °F)	
• Measuring cell with inert filling liquid	-20 ... +100 °C (-4 ... +212 °F)	
• In conjunction with dust explosion protection	-20 ... +60 °C (-4 ... +140 °F)	
Ambient conditions		
• Ambient temperature		
- Digital indicators	-30 ... +85 °C (-22 ... +185 °F)	
• Storage temperature	-50 ... +85 °C (-58 ... +185 °F)	
• Climatic class		
- Condensation	Permissible	
• Electromagnetic compatibility		
- Emitted interference and interference immunity	To EN 61326 and NAMUR NE 21	
Material of the mounting bracket		
• Steel	Sheet steel, Mat. No. 1.0330, chrome-plated	
• Stainless steel	Stainless steel, Mat. No. 1.4301 (SS304)	
Design		
Weight (without options)	≈ 4.5 kg (≈ 9.9 lb)	
Housing material	Poor in copper die-cast aluminium, GD-AlSi12 or stainless steel precision casting, mat. No. 1.4408	
Wetted parts materials		
• Seal diaphragm	Stainless steel, mat. No. 1.4404/316L or Hastelloy C276, mat. No. 2.4819, Monel, mat. No. 2.4360, tantalum or gold	
Measuring cell filling	Silicone oil or inert filling liquid (max. 160 bar (2320 psi g) with oxygen measurement)	
Process connection	Female thread ¼-18 NPT and flange connection with mounting thread M10 to DIN 19213 or $^{7}/_{16}$-20 UNF to EN 61518	
Power supply U_H		Supplied through bus
Terminal voltage on transmitter	10.5 ... 45 V DC 10.5 ... 30 V DC in intrinsically-safe mode	-
Separate 24 V power supply necessary	-	No
Bus voltage		
• Not Ex	-	9 ...32 V
• With intrinsically-safe operation	-	9 ...24 V

© Siemens AG 2009

SITRANS P, DS III series, for differential pressure and flow		
	HART	**PROFIBUS PA or FOUNDATION Fieldbus**
Power supply U_H		
Current consumption		
• Basic current (max.)	-	12.5 mA
• Startup current ≤ basic current	-	Yes
• Max. current in event of fault	-	15.5 mA
Fault disconnection electronics (FDE) avail.	-	Yes
Certificate and approvals		
Classification according to pressure equipment directive (DRGL 97/23/EC)		
PN 32/160 (MWP 464/2320 psi)	For gases of fluid group 1 and liquids of fluid group 1; complies with requirements of Article 3, paragraph 3 (sound engineering practice)	
PN 420 (MWP 6092 psi)	For gases of fluid group 1 and liquids of fluid group 1; complies with basic safety requirements of Article 3, paragraph 1 (appendix 1); assigned to category III, conformity evaluation module H by the TÜV Nord.	
Explosion protection		
• Intrinsic safety "i"	PTB 99 ATEX 2122	
- Identification	Ex II 1/2 G EEx ia/ib IIB/IIC T6	
- Permissible ambient temperature	-40 ... +85 °C (-40 ... +185 °F) temperature class T4; -40 ... +70 °C (-40 ... +158 °F) temperature class T5; -40 ... +60 °C (-40 ... +140 °F) temperature class T6	
- Connection	To certified intrinsically-safe circuits with maximum values: U_i = 30 V, I_i = 100 mA, P_i = 750 mW; R_i = 300 Ω	FISCO supply unit: U_o = 17.5 V, I_o = 380 mA, P_o = 5.32 W Linear barrier: U_o = 24 V, I_o = 250 mA, P_o = 1.2 W
- Effective internal inductance/capacitance	L_i = 0.4 mH, C_i = 6 nF	L_i = 7 µH, C_i = 1.1 nF
• Explosion-proof "d"	PTB 99 ATEX 1160	
- Identification	Ex II 1/2 G EEx d IIC T4/T6	
- Permissible ambient temperature	-40 ... +85 °C (-40 ... +185 °F) temperature class T4; -40 ... +60 °C (-40 ... +140 °F) temperature class T6	
- Connection	To circuits with values: U_H = 10.5 ... 45 V DC	To circuits with values: U_H = 9 ... 32 V DC
• Dust explosion protection for zone 20	PTB 01 ATEX 2055	
- Identification	Ex II 1 D IP65 T 120 °C Ex II 1/2 D IP65 T 120 °C	
- Permissible ambient temperature	-40 ... +85 °C (-40 ... +185 °F)	
- Max.surface temperature	120 °C (248 °F)	
- Connection	To certified intrinsically-safe circuits with maximum values: U_i = 30 V, I_i = 100 mA, P_i = 750 mW, R_i = 300 Ω	FISCO supply unit: U_o = 17.5 V, I_o = 380 mA, P_o = 5.32 W Linear barrier: U_o = 24 V, I_o = 250 mA, P_o = 1.2 W
- Effective internal inductance/capacitance	L_i = 0.4 mH, C_i = 6 nF	L_i = 7 µH, C_i = 1.1 nF
• Dust explosion protection for zone 21/22	PTB 01 ATEX 2055	
- Identification	Ex II 2 D IP65 T 120 °C	
- Connection	To circuits with values: U_H = 10.5 ... 45 V DC; P_{max} = 1.2 W	To circuits with values: U_H = 9 ... 32 V DC; P_{max} = 1.2 W
• Type of protection "n" (zone 2)	TÜV 01 ATEX 1696 X	Planned
- Identification	Ex II 3 G EEx nA L IIC T4/T5/T6	-
• Explosion protection to FM	Certificate of Compliance 3008490	
- Identification (XP/DIP) or (IS); (NI)	CL I, DIV 1, GP ABCD T4...T6; CL II, DIV 1, GP EFG; CL III; CL I, ZN 0/1 AEx ia IIC T4...T6; CL I, DIV 2, GP ABCD T4...T6; CL II, DIV 2, GP FG; CL III	
• Explosion protection to CSA	Certificate of Compliance 1153651	
- Identification (XP/DIP) or (IS)	CL I, DIV 1, GP ABCD T4...T6; CL II, DIV 1, GP EFG; CL III; Ex ia IIC T4...T6; CL I, DIV 2, GP ABCD T4...T6; CL II, DIV 2, GP FG; CL III	

© Siemens AG 2009

HART communication	
HART communication	230 ... 1100 Ω
Protocol	HART Version 5.x
Software for computer	SIMATIC PDM
PROFIBUS PA communication	
Simultaneous communication with master class 2 (max.)	4
The address can be set using	Configuration tool or local operation (standard setting address 126)
Cyclic data usage	
• Output byte	5 (one measuring value) or 10 (two measuring values)
• Input byte	0, 1, or 2 (register operating mode and reset function for metering)
Internal preprocessing	
Device profile	PROFIBUS PA Profile for Process Control Devices Version 3.0, Class B
Function blocks	2
• Analog input	
- Adaptation to customer-specific process variables	Yes, linearly rising or falling characteristic
- Electrical damping T_{63}, adjustable	0 ... 100 s
- Simulation function	Input /Output
- Failure mode	Can be parameterized (last good value, substitute value, incorrect value)
- Limit monitoring	Yes, one upper and lower warning limit and one alarm limit respectively
• Register (totalizer)	Can be reset, preset, optional direction of counting, simulation function of register output
- Failure mode	Can be parameterized (summation with last good value, continuous summation, summation with incorrect value)
- Limit monitoring	One upper and lower warning limit and one alarm limit respectively
• Physical block	1
Transducer blocks	2
• Pressure transducer block	
- Can be calibrated by applying two pressures	Yes
- Monitoring of sensor limits	Yes
- Specification of a container characteristic with	Max. 30 nodes
- Square-rooted characteristic for flow measurement	Yes
- Gradual volume suppression and implementation point of square-root extraction	Parameterizable
- Simulation function for measured pressure value and sensor temperature	Constant value or over parameterizable ramp function

Communication FOUNDATION Fieldbus	
Function blocks	3 function blocks analog input, 1 function block PID
• Analog input	
- Adaptation to customer-specific process variables	Yes, linearly rising or falling characteristic
- Electrical damping T_{63}, adjustable	0 ... 100 s
- Simulation function	Output/input (can be locked within the device with a bridge)
- Failure mode	Can be parameterized (last good value, substitute value, incorrect value)
- Limit monitoring	Yes, one upper and lower warning limit and one alarm limit respectively
- Square-rooted characteristic for flow measurement	Yes
• PID	Standard FF function block
• Physical block	1 Resource block
Transducer blocks	1 transducer block Pressure with calibration, 1 transducer block LCD
• Pressure transducer block	
- Can be calibrated by applying two pressures	Yes
- Monitoring of sensor limits	Yes
- Simulation function: Measured pressure value, sensor temperature and electronics temperature	Constant value or over parameterizable ramp function

© Siemens AG 2009

DS III series for differential pressure and flow

2

Selection and Ordering data			Order No.
SITRANS P pressure transmitters for differential pressure and flow, Series DS III HART PN 32/160 (MWP 464/2320 psi)			**7MF4433 -** ■■■■■ - ■■■■
Measuring cell filling	**Measuring cell cleaning**		
Silicone oil	Standard	▶	1
Inert liquid[1]	Grease-free		3
Span			
PN 32 (MWP 464 psi)			
1 ... 20 mbar[2]	(0.4015 ... 8.03 inH_2O)	▶	B
PN 160 (MWP 2320 psi)			
1 ... 60 mbar	(0.4015 ... 24.09 inH_2O)	▶	C
2.5 ... 250 mbar	(1.004 ... 100.4 inH_2O)	▶	D
6 ... 600 mbar	(2.409 ... 240.9 inH_2O)	▶	E
16 ... 1600 mbar	(6.424 ... 642.4 inH_2O)	▶	F
50 ... 5000 mbar	(20.08 ... 2008 inH_2O)	▶	G
0.3 ... 30 bar	(4.35 ... 435 psi)	▶	H
Wetted parts materials			
(stainless steel process flanges)			
Seal diaphragm	Parts of measuring cell		
Stainless steel	Stainless steel	▶	A
Hastelloy	Stainless steel		B
Hastelloy	Hastelloy		C
Tantalum[3]	Tantalum		E
Monel[3]	Monel		H
Gold[3]	Gold		L
Version for diaphragm seal[4] [5]			Y
Process connection			
Female thread ¼-18 NPT with flange connection			
• Sealing screw opposite process connection			
- Mounting thread $^7/_{16}$-20 UNF to EN 61518			2
- Mounting thread M10 to DIN 19213 (only for replacement needs)		▶	0
• Vent on side of process flange[2]			
- Mounting thread $^7/_{16}$-20 UNF to EN 61518			6
- Mounting thread M10 to DIN 19213 (only for replacement needs)			4
Non-wetted parts materials			
Process flange screws	Electronics housing		
Stainless steel	Die-cast aluminium	▶	2
Stainless steel	Stainless steel precision casting[6]		3
Version			
• Standard version			1
• International version, English label inscriptions, documentation in 5 languages on CD		▶	2
Explosion protection			
• Without			A
• With ATEX, Type of protection:			
- "Intrinsic safety (EEx ia)"			B
- "Explosion-proof (EEx d)"[7]			D
- "Intrinsic safety and explosion-proof enclosure (EEx ia + EEx d)"[8]			P
- "Ex nA/nL (zone 2)"			E
- "Intrinsic safety, explosion-proof enclosure and dust explosion protection (EEx ia + EEx d + Zone 1D/2D)"[8]		▶	R
• With FM + CSA, Type of protection:			
- "Intrinsic safety and explosion-proof (is + xp)"[7]			NC
Electrical connection / cable entry			
• Screwed gland Pg 13.5[9]			A
• Screwed gland M20x1.5		▶	B
• Screwed gland ½-14 NPT			C
• Han 7D plug (plastic housing) incl. mating connector[10]			D
• M12 connectors (metal)[10]			F

Selection and Ordering data	Order No.
SITRANS P pressure transmitters for differential pressure and flow, Series DS III HART PN 32/160 (MWP 464/2320 psi)	**7MF4433 -** ■■■■■ - ■■■■
Display	
• Without indicator	0
• Without visible digital indicator (digital indicator hidden, setting: mA) ▶	1
• With visible digital indication	6
• With customer-specific digital indicator (setting as specified, Order code "Y21" or „Y22" required)	7

▶ Available ex stock

Power supply units see "SITRANS I power supply units and isolation amplifiers".

Factory-mounting of shut-off valves and valve manifolds see page 2/147.

Included in delivery of the device:
- Brief instructions (Leporello)
- CD-ROM with detailed documentation
- Sealing plug(s) or sealing screw(s) for the process flanges(s)

1) For oxygen application, add Order code E10.
2) Not suitable for connection of remote seal. Position of the top vent valve in the process flanges (see dimensional drawing).
3) Not together with max. span 20 and 60 mbar (8.03 and 24.09 inH_2O)
4) When the manufacture's certificate M (calibration certificate) has to be ordered for transmitters with diaphragm seals, it is recommended only to order this certificate exclusively with the diaphragm seals. The measuring accuracy of the total combination is certified here.
5) Whe the acceptance test certificate 3.1 for transmitters with direct-connected diaphragm seals is ordered, this certificate must also be ordered with the corresponding seals.
6) Not together with Electrical connection „Screwed gland Pg 13.5" and „Han7D plug".
7) Without cable gland, with blanking plug
8) With enclosed cable gland EEx ia and blanking plug
9) Not together with type of protection "Explosion-proof" and and type of protection "Ex nA".
10) M12 delivered without cable socket.

© Siemens AG 2009

DS III series for differential pressure and flow

Selection and Ordering data	Order code	HART	PA	FF
Further designs Add "-Z" to Order No. and specify Order code.				
Pressure transmitter with mounting bracket made of:				
• Steel	A01	✓	✓	✓
• Stainless steel	A02	✓	✓	✓
O-rings for process flanges (instead of FPM (Viton))				
• PTFE (Teflon)	A20	✓	✓	✓
• FEP (with silicone core, approved for food)	A21	✓	✓	✓
• FFPM (Kalrez, compound 4079)	A22	✓	✓	✓
• NBR (Buna N)	A23	✓	✓	✓
Plug				
• Han 7D (metal, gray)	A30	✓		
• Han 8U (instead of Han 7D)	A31	✓		
Sealing screws ¼-18 NPT, with vent valve in mat. of process flanges	A40	✓	✓	✓
Cable sockets for M12 connectors (metal)	A50	✓	✓	✓
Rating plate inscription (instead of German)				
• English	B11	✓	✓	✓
• French	B12	✓	✓	✓
• Spanish	B13	✓	✓	✓
• Italian	B14	✓	✓	✓
English rating plate (calibration certificate) Pressure units in inH_2O or psi	B21	✓	✓	✓
Quality inspection certificate (Factory calibration) to IEC 60770-2 [1]	C11	✓	✓	✓
Acceptance test certificate[2] To EN 10 204-3.1	C12	✓	✓	✓
Factory certificate To EN 10 204-2.2	C14	✓	✓	✓
"Functional Safety (SIL)" certificate	C20	✓		
"PROFIsafe" certificate and protocol	C21		✓	
Setting of upper limit of output signal to 22.0 mA	D05	✓		
Manufacturer's declaration acc. to NACE (only together with seal diaphragm made of Hastelloy and stainless steel)	D07	✓	✓	✓
Type of protection IP68 (only for M20x1.5 and ½-14 NPT)	D12	✓	✓	✓
Digital indicator alongside the input keys (only together with the devices 7MF4433-....2-.A.6 or -.A.7-Z, Y21 or Y22 + Y01)	D27	✓	✓	✓
Process flange screws made of Monel (max. nominal pressure PN20)	D34	✓	✓	✓
Supplied with oval flange set (2 items), PTFE packings and stainles steel screws in thread of process flanges	D37	✓	✓	✓
Use in or on zone 1D/2D (only together with type of protection "Intrinsic safety (EEx ia)")	E01	✓	✓	✓
Use on zone 0 (only together with type of protection "Intrinsic safety (EEx ia)")	E02	✓	✓	✓
TÜV approval to AD/TRD (only together with type of protection "Intrinsic safety (EEx ia)")	E06	✓		
Overfilling safety device for flammable and non-flammable liquids (max. PN 32 (MVWP 464 psi), basic device with type of protection "Intrinsic safety (EEx ia)", to WHG and VbF, not together with measuring cell filling "inert liquid")	E08	✓	✓	✓

Selection and Ordering data	Order code	HART	PA	FF
Further designs Add "-Z" to Order No. and specify Order code.				
Oxygen application (max. 120 bar (1740 psi) at 60°C (140 °F) with oxygen measurement and inert liquid)	E10	✓	✓	✓
Explosion-proof "Intrinsic safety" to INMETRO (Brazil) (only for transmitter 7MF4...-.....-.B..)	E25	✓	✓	✓
Explosion-proof "Intrinsic safety" to NEPSI (China) (only for transmitter 7MF4...-.....-.B..)	E55	✓	✓	✓
Explosion protection "Explosion-proof" to NEPSI (China) (only for transmitter 7MF4...-.....-.D..)	E56	✓	✓	✓
Explosion-proof "Zone 2" to NEPSI (China) (only for transmitter 7MF4...-.....-.E..)	E57	✓	✓	✓
Interchanging of process connection side	H01	✓	✓	✓
Vent on side for gas measurements	H02	✓	✓	✓
Stainless steel process flanges for vertical differential pressure lines (not together with K01, K02 and K04)[3]	H03	✓	✓	✓
Process flange				
• Hastelloy	K01	✓	✓	✓
• Monel	K02	✓	✓	✓
• Stainless steel with PVDF insert max. PN 10 (MWP 145 psi), max. temperature of medium 90 °C (194 °F)	K04	✓	✓	✓
For ½-14 NPT inner process connection on the side in the middle of the process flange, vent valve not possible				

✓ = available

1) When the manufacture's certificate M (calibration certificate) has to be ordered for transmitters with diaphragm seals, it is recommended only to order this certificate exclusively with the diaphragm seals. The measuring accuracy of the total combination is certified here.

2) Whe the acceptance test certificate 3.1 for transmitters with direct-connected diaphragm seals is ordered, this certificate must also be ordered with the corresponding seals.

3) Not suitable for connection of remote seal

© Siemens AG 2009

Selection and Ordering data	Order code	HART	PA	FF
Additional data Add "-Z" to Order No. and specify Order code.				
Measuring range to be set Specify in plain text:				
• With linear characteristic (max. 5 digits): Y01: ... up to ... mbar, bar, kPa, MPa, psi	**Y01**	✓		
• With square-rooted characteristic (max. 5 digits): Y02: ... up to ... mbar, bar, kPa, MPa, psi	**Y02**	✓		
Measuring point number (TAG No.) Max. 16 char., specify in plain text: Y15:	**Y15**	✓	✓	✓
Measuring point text Max. 27 char., specify in plain text: Y16:	**Y16**	✓	✓	✓
Entry of HART address (TAG) Max. 8 char., specify in plain text: Y17:	**Y17**	✓		
Setting of pressure indicator in pressure units Specify in plain text (standard setting: mA): Y21: mbar, bar, kPa, MPa, psi, ... Note: The following pressure units can be selected: bar, mbar, mm H_2O*), inH_2O*), ftH_2O*), mmHG, inHG, psi, Pa, kPa, MPa, g/cm^2, kg/cm^2, Torr, ATM oder % *) ref. temperature 20 °C	**Y21**	✓	✓	✓
Setting of pressure indicator in non-pressure units[1] Specify in plain text: Y22: ..... up to ..... l/min, m^3/h, m, USgpm, ... (specification of measuring range in pressure units "Y01" or "Y02" is essential, unit with max. 5 characters)	**Y22**[2] + **Y01** *or* **Y02**	✓		
Preset bus address (possible between 1 and 126) Specify in plain text: Y25:	**Y25**		✓	

Only "Y01", "Y21", "Y22", "Y25" and "D05" can be factory preset

✓ = available

1) Preset values can only be modified over SIMATIC PDM.
2) Not together with over-filling safety device for flammable and non-flammable liquids (Order code "E08")

© Siemens AG 2009

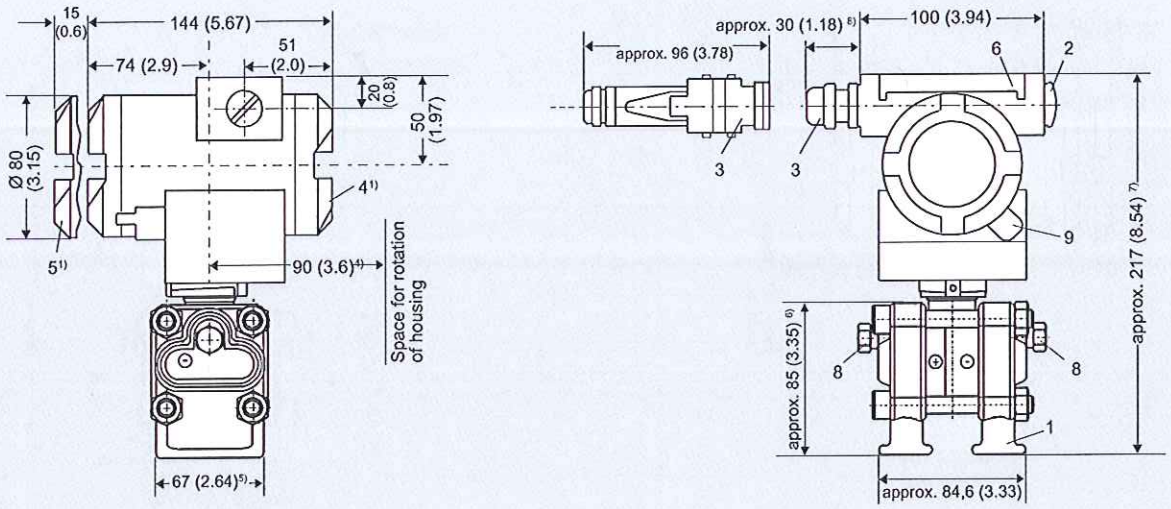

1 Process connection: ¼-18 NPT (EN 61518)
2 Blanking plug
3 Electrical connection:
- screwed gland Pg 13,5 (adapter) [2) 3)],
- screwed gland M20x1,5 [3)],
- screwed gland ½-14 NPT or
- Han 7D/ Han 8U plug [2) 3)]
4 Terminal side
5 Electronics side, digital display (longer overall length for cover with window)
6 Protective cover over keys
7 Mounting bracket (option)
8 Sealing screw (optionally with vent valve)
9 Screw cover - safety bracket (only for type of protection "Explosion-proof enclosure", not shown in the drawing)

1) Allow approx. 20 mm (0.79 inch) thread length to permit unscrewing
2) Not with type of protection "explosion-proof enclosure"
3) Not with type of protection "FM + CSA [is + xp]"
4) 92 mm (3.6 inch) for minimum distance to permit rotation with indicator
5) 74 mm (2.9 inch) for PN ≤ 420 (MWP ≤ 6092 psi)
6) 91 mm (3.6 inch) for PN ≤ 420 (MWP ≤ 6092 psi)
7) 219 mm (8.62 inch) for PN ≤ 420 (MWP ≤ 6092 psi)
8) 45 mm (1.8 inch) for Pg 13,5 with adapter

SITRANS P pressure transmitters, DS III HART series for differential pressure and flow, with process covers for vertical differential pressure lines, option „H03", dimensions in mm (inch)

© Siemens AG 2009

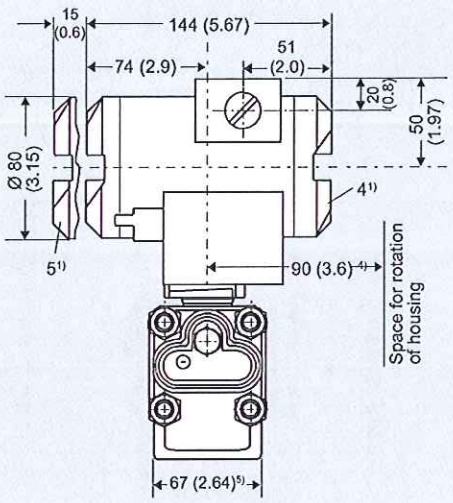

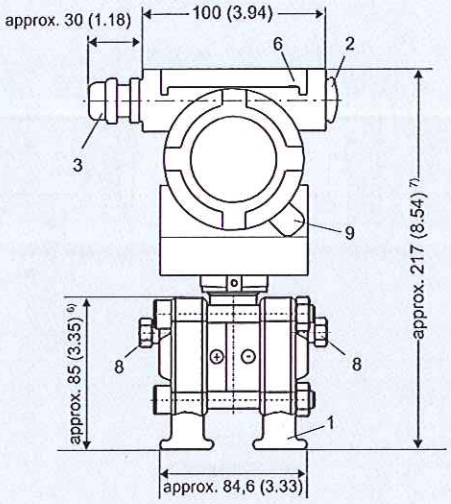

1 Process connection ¼-18 NPT (EN 61 518)
2 Blanking plug
3 Electrical connection:
- screwed gland M20x1.5 [3],
- screwed gland ½-14 NPT or
- PROFIBUS plug M12 [2)3)]
4 Terminal side
5 Electronics side, digital display (longer overall length for cover with window)
6 Protective cover over keys
7 Mounting bracket (option)
8 Sealing screw (optionally with vent valve)
9 Screw cover safety bracket (only for explosion-proof enclosure, not shown in the drawing)

1) Allow approx. 20 mm (0.79 inch) thread length to permit unscrewing
2) Not with type of protection "explosion-proof enclosure"
3) Not with type of protection "FM + CSA [is + xp]"
4) 92 mm (3.6 inch) for minimum distance to permit rotation with indicator
5) 74 mm (2.9 inch) for PN ≤ 420 (MWP ≤ 6092 psi)
6) 91 mm (3.6 inch) for PN ≤ 420 (MWP ≤ 6092 psi)
7) 219 mm (8.62 inch) for PN ≤ 420 (MWP ≤ 6092 psi)

SITRANS P pressure transmitters, DS III PA and FF series for differential pressure and flow, with process covers for vertical differential pressure lines, option „H03", dimensions in mm (inch)

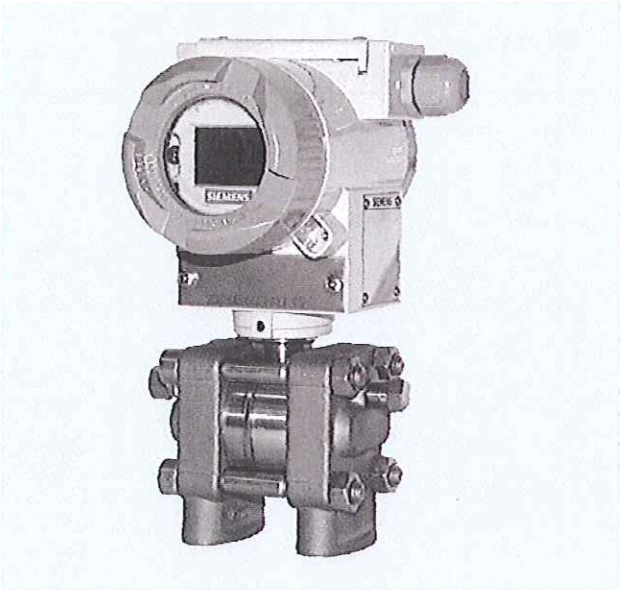

SITRANS P pressure transmitters, DS III series for differential pressure and flow, with process covers for vertical differential pressure lines

Instruction

MI IDP10-T
August 2006

I/A Series® Pressure Transmitters

IDP10 Differential Pressure with HART Communication

Installation, Operation, Calibration, Configuration, and Maintenance

FIT-3001 - Flow Transmitter for KAFB-106228

invensys®
FOXBORO®

Contents

Figures ..... **v**

Tables ..... **vii**

1. Introduction **1**
General Description 1
Reference Documents 1
Transmitter Identification 3
Standard Specifications 5
Product Safety Specifications 10

2. Installation **13**
Transmitter Mounting 13
Process Mounting 13
Manifold Mounted Transmitter 14
Transmitter Mounted on a Coplanar‰ Manifold 15
Pipe or Surface Mounting 15
Standard Mounting Bracket 15
Universal Mounting Bracket 17
Venting and Draining 20
Traditional Structure 20
LP1 Low Profile Structure 20
LP2 Low Profile Structure 21
Installation of Flow Measurement Piping 21
Filling System with Seal Liquid 23
Positioning the Housing 24
Positioning the Display 24
Setting the Write Protect Jumper 24
Cover Locks 24
Wiring 25
Accessing Transmitter Field Terminals 25
Wiring the Transmitter to a Control Loop 26
Multidrop Communication 29
Connecting the Transmitter to an I/A Series System 30
Putting a Differential Pressure Transmitter Into Operation 30
Taking a Differential Pressure Transmitter Out of Operation 30

3. Operation Via Local Display **31**
Entering Numerical Values 33
Reranging 33
Viewing the Database 33
Viewing the Pressure Range 34
Testing the Display 34
Error Messages 35

4. Calibration **37**
General Calibration Notes 37

Calibration Setup 39
Setup of Electronic Equipment 39
Field Calibration Setup 39
Bench Calibration Setup 40
Calibration Using a PC20 41
Calibration Using a PC50 41
Calibration Using a HART Communicator 41
Calibration Using the Optional Local Display 41
Zero Adjustment Using External Zero Button 45
Error Messages 47

5. Configuration 49
Configurable Parameters 49
Configuration Using a PC20 50
Configuration Using a PC50 50
Configuration Using a HART Communicator 50
Configuration Using the Optional Local Display 50
Character Lists 58
Error Messages 59

6. Maintenance 61
Error Messages 61
Parts Replacement 61
Replacing the Terminal Block Assembly 61
Replacing the Electronics Module Assembly 61
Removing and Reinstalling a Housing Assembly 63
Adding the Optional Display 63
Replacing the Sensor Assembly 63
Rotating Process Covers for Venting 64

Index 67

Figures

1 Transmitter Identification 3
2 Top Level Structure Diagram (Version 4 Firmware) 4
3 Top Level Structure Diagram (Version 5 Firmware) 4
4 Minimum Allowable Absolute Pressure vs. Process Temperature with Fluorinert Fill Fluid 7
5 Typical Mounting of an IDP10 Transmitter Supported by Process Piping 13
6 Typical Mounting of an IDP10 Transmitter Supported by a Bypass Manifold 14
7 Typical Mounting of BM-M4A and BM-M4T Manifold with -AM Bracket 14
8 Typical Mounting of MB3VIS-4 or MB5VIS-4 Manifold with Z-Shaped and -UB Bracket 15
9 Typical Mounting of IDP10 Transmitter on Coplanar Manifold 15
10 Pipe or Surface Mounted Transmitter Using a Standard Bracket 16
11 Examples of Mounting With a Standard Bracket 16
12 Details of a Universal Bracket 17
13 Mounting a Transmitter with Traditional Structure Using a Universal Bracket 17
14 Vertical Pipe Mounting a Transmitter with LP2 Structure Using a Universal Bracket 18
15 Horizontal Mounting a Transmitter with LP2 Structure Using a Universal Bracket 19
16 Vertical Mounting - Cavity Draining 20
17 Vertical Mounting - Cavity Venting 20
18 Horizontal Mounting - Cavity Venting 20
19 Vertical Mounting - Cavity Venting 21
20 Horizontal Mounting - Cavity Venting and Draining 21
21 Cavity Venting and Draining 21
22 Example of Horizontal Process Line Installation 22
23 Example of Vertical Process Line Installation 23
24 Housing Set Screw Location 24
25 Cover Lock Location 25
26 Accessing Field Terminals 25
27 Identification of Field Terminals 26
28 Supply Voltage and Loop Load 27
29 Loop Wiring Transmitters 28
30 Wiring Several Transmitters to a Common Power Supply 29
31 Typical Multidrop Network 29
32 Local Display Module 31
33 Top Level Structure Diagram (Version 4 Firmware) 32
34 Top Level Structure Diagram (Version 5 Firmware) 32
35 Display Test Segment Patterns 34
36 4 to 20 mA Output Calibration Setup of Electronic Equipment 39
37 Field Calibration Setup 40
38 Bench Calibration Setup 41
39 Calibration Structure Diagram 43
40 Calibration Structure Diagram (Continued) 44
41 Configuration Structure Diagram 52
42 Configuration Structure Diagram (Continued) 53
43 Configuration Structure Diagram (Continued) 54
44 Replacing the Electronics Module Assembly and Display 62
45 Replacing the Sensor Assembly 64
46 Replacing the Sensor Assembly (pvdf Inserts) 64
47 Sensor Cavity Venting and Draining 65

Tables

1 Reference Documents 1
2 Minimum Loop Load and Supply Voltage Requirements 8
3 Electrical Safety Specifications 11
4 Operation Error Messages 35
5 Calibration Menu 42
6 Calibration Error Messages 47
7 IDP10-T Configurable Parameters 49
8 Configuration Menu 50
9 Alphanumeric Character List 58
10 Numeric Character List 58
11 Configuration Error Messages 59

1. Introduction

General Description

The IDP10-T intelligent differential pressure transmitters measure the difference between two pressures applied to opposite sides of a silicon strain gauge microsensor within the sensor assembly. This microsensor converts differential pressure to a change in resistance. The resistance change is then converted to a 4 to 20 mA or digital signal proportional to differential pressure or to the square root of differential pressure. This measurement signal is transmitted to remote receivers over the same two wires that supply power to the transmitter electronics. These wires also carry two-way data signals between the transmitter and remote communication devices.

The transmitter allows direct analog connection to common receivers while still providing full Intelligent Transmitter Digital Communications using a HART Communicator.

The transmitter is often used for measuring fluid flow rates across a primary device such as an orifice plate, but can also be used for other types of differential pressure measurements such as liquid level, interface level, or density measurements. The IDP10 can also be supplied with direct connected or remote pressure seals to isolate the measuring element from corrosive or viscous fluids.

For more detailed information on the principle of operation of the transmitter, refer to document TI 037-096, available from Invensys Foxboro.

Reference Documents

Table 1. Reference Documents

Document	Description
Dimensional Prints	
DP 020-342	Dimensional Print – PSFLT Pressure Seals
DP 020-343	Dimensional Print – PSFPS and PSFES Pressure Seals
DP 020-345	Dimensional Print – PSFAR Pressure Seals
DP 020-347	Dimensional Print – PSTAR Pressure Seals
DP 020-349	Dimensional Print – PSISR Pressure Seals
DP 020-351	Dimensional Print – PSSCR Pressure Seals
DP 020-353	Dimensional Print – PSSCT Pressure Seals
DP 020-354	Dimensional Print – PSSSR Pressure Seals
DP 020-355	Dimensional Print – PSSST Pressure Seals
DP 020-446	Dimensional Print – IDP10, IDP25, and IDP50 Differential Pressure Transmitters
DP 022-335	Dimensional Print – Model CO Compact Orifice
Parts Lists	
PL 006-172	Parts List – Model CO Compact Orifice

Table 1. Reference Documents (Continued)

Document	Description
PL 009-005	Parts List – IDP10 Differential Pressure Transmitter
Instructions	
MI 020-328	Instruction – Bubble Type Installation for Liquid Level
MI 020-329	Instruction – High Accuracy Flow Measurement
MI 020-366	Instruction – I/A Series Intelligent Pressure Transmitters Operation, Configuration, and Calibration Using a HART Communicator
MI 020-369	Instruction – Pressure Seals
MI 020-427	Instruction – Intrinsic Safety Connection Diagrams and Nonincendive Circuits
MI 020-495	Instruction – PC20 Intelligent Transmitter Configurator
MI 020-501	Instruction – PC50 Intelligent Field Device Tool (Installation and Parts List)
MI 020-505	Instruction – PC50 Intelligent Field Device Tool (Operation Using HART Protocol)
MI 022-137	Instruction – Bypass Manifolds - Installation and Maintenance
MI 022-335	Instruction – Model CO Compact Orifice
Technical Information	
TI 1-50a	Technical Information – Liquid Density Measurement
TI 001-051	Technical Information – Liquid Interface Measurement
TI 001-052	Technical Information – Liquid Level Measurement
TI 37-75b	Technical Information – Transmitter Material Selection Guide
TI 037-096	Technical Information – I/A Series Pressure Transmitters

Transmitter Identification

See Figure 1 for transmitter data plate contents. For a complete explanation of the Model Number code, see the parts list. The firmware version is identified on the top line of the display when **VIEW DB** (View Database) is selected in the top level structure (see Figures 2 or 3).

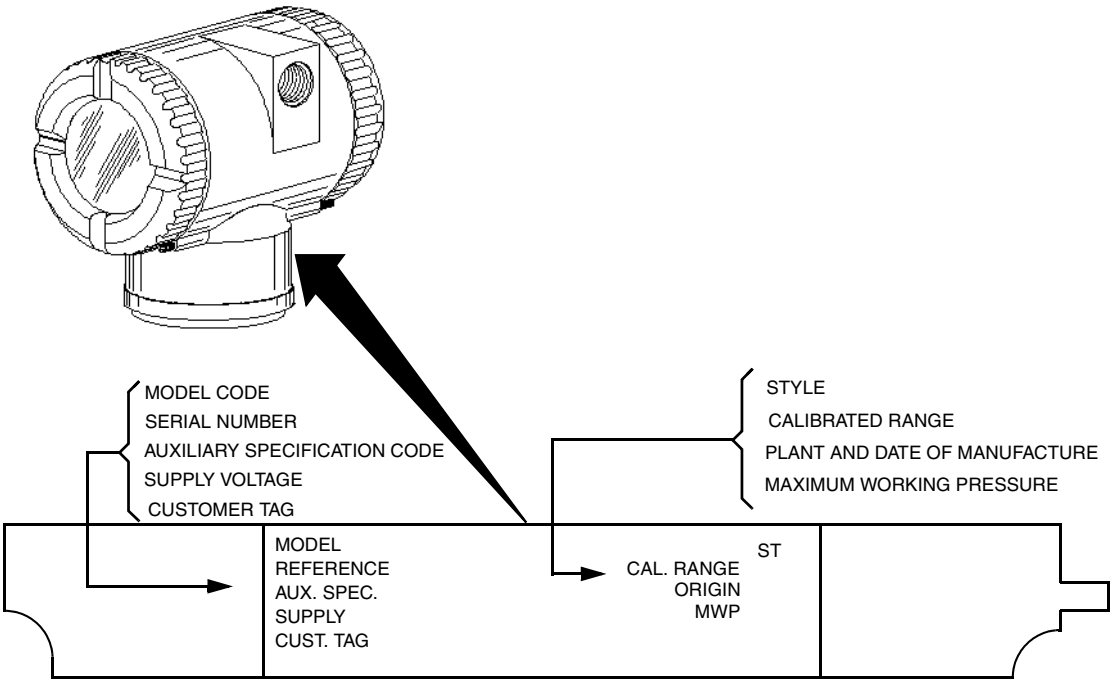

Figure 1. Transmitter Identification

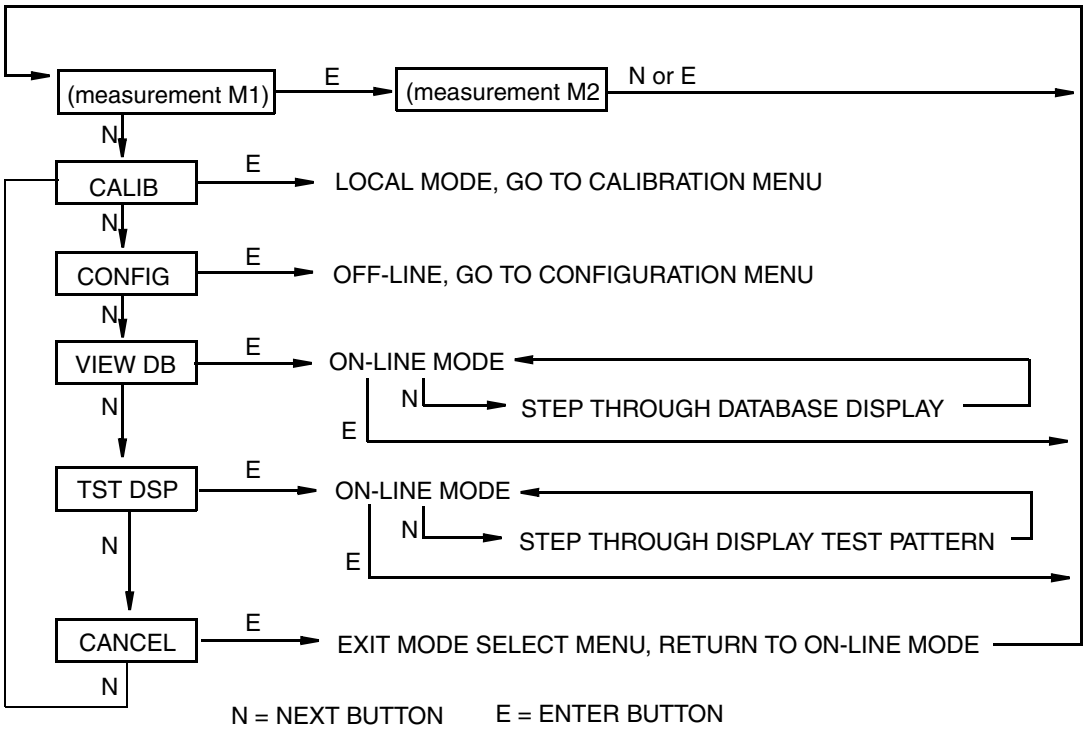

Figure 2. Top Level Structure Diagram (Version 4 Firmware)

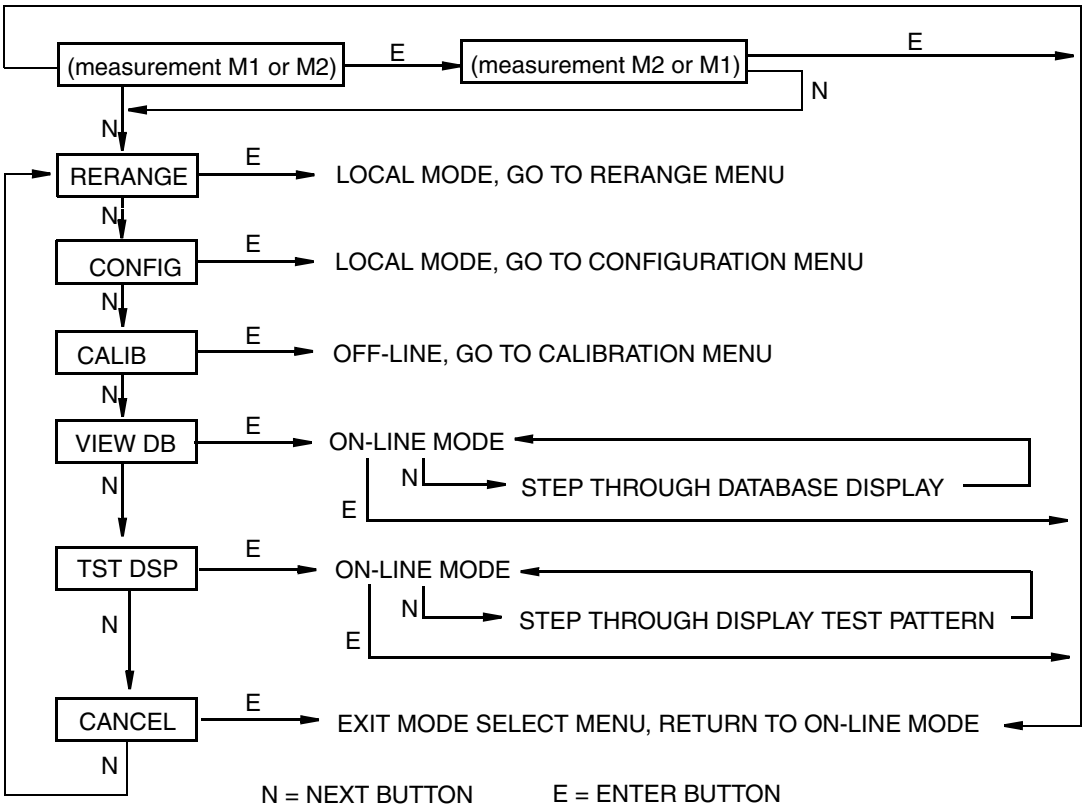

Figure 3. Top Level Structure Diagram (Version 5 Firmware)

Standard Specifications

Operative Limits

Influence	Operative Limits
Sensor Body Temperature[a] Silicone Fill Fluid Fluorinert Fill Fluid Neobee Fill Fluid pvdf Inserts	 -46 and +121°C (-50 and +250°F) -29 and +121°C (-20 and +250°F) -18 and +121°C (0 and 250°F) -7 and +82°C (20 and 180°F)
Electronics Temperature With LCD Display	-40 and +85°C (-40 and +185°F) -40 and +85°C (-40 and +185°F)[b]
Relative Humidity	0 and 100%
Supply Voltage	11.5 and 42 V dc
Output Load[c]	0 and 1450 ohms
Mounting Position	No Limit
Vibration	6.3 mm (0.25 in) double amplitude from 5 to 15 Hz with aluminum housing and from 5 to 9 Hz with 316 ss housing. 0 to 30 m/s (0 to 3 “g”) from 15 to 500 Hz with aluminum housing and 0 to 10 m/s (0 to 1 “g”) from 9 to 500 Hz with 316 ss housing.

(a) Refer to MI 020-369 for temperature limits with pressure seals.

(b) Display updates are slowed and readability decreased at temperatures below -20°C (-4°F).

(c) 250 Ω minimum load is required for communication with a HART Communicator.

Span and Range Limits

Span Limit Code	Span Limits ΔP	Range Limits ΔP [a]
A[b]	0.12 and 7.5 kPa 0.5 and 30 inH_20 12 and 750 mmH_20	-7.5 and +7.5 kPa -30 and +30 inH_20 -750 and +750 mmH_20
B	0.87 and 50 kPa 3.5 and 200 inH_20 87 and 5000 mmH_20	-50 and +50 kPa -200 and +200 inH_20 -5000 and +5000 mmH_20
C	7.0 and 210 kPa 28 and 840 inH_20 2.3 and 69 ftH_20	-210 and +210 kPa -840 and +840 inH_20 -69 and +69 ftH_20
D	0.07 and 2.1 MPa 10 and 300 psi 23 and 690 ftH_20	-0.21 and +2.1 MPa -30 and +300 psi -69 and +690 ftH_20
E	0.7 and 21 MPa 100 and 3000 psi	-0.21 and +21 MPa -30 and +3000 psi

(a) Negative values of differential pressure indicate a higher pressure on the **low side** of the sensor. Positive values indicate a higher pressure on the **high side** of the sensor.

(b) Span Limit Code “A” not available with pressure seals.

Maximum Static, Overrange, and Proof Pressure

Transmitter Configuration (Bolting Material)[c]	Maximum Static and Overrange Pressure Rating[a,e,f]		Proof Pressure Rating[b]	
	MPa	Psi	MPa	Psi
Standard (B7 steel), Option “-B2” (17-4 PH ss), Option “-D3” or “-D7”	25	3625	100	14500
Option “B1” (316 ss) or Option “-D5”	15	2175	60	8700
Option “B3” (B7M)	20	2900	70	11150
Option “-D1”	16	2320	64	9280
Option “-D2”, “-D4”, “-D6”, or “-D8”[d]	10	1500	40	6000
Option “-D9” (17-4 PH ss)	40	5800	100	14500

(a) Either side can be at higher pressure during overrange.

(b) Meets ANSI/ISA Standard S82.03-1988.

(c) -D1 = DIN Single ended process cover with M10 B7 bolting.
-D2 = DIN Double ended process cover with M10 B7 bolting
-D3 = DIN Single ended process cover with 7/16 in B7 bolting.
-D4 = DIN Double ended process cover with 7/16 in B7 bolting.
-D5 = DIN Single ended process cover with 7/16 in 316 ss bolting.
-D6 = DIN Double ended process cover with 7/16 in 316 ss bolting.
-D7 = DIN Single ended process cover with 7/16 in 17-4 ss bolting.
-D8 = DIN Double ended process cover with 7/16 in 17-4 ss bolting
-D9 = DIN Single ended process cover with 7/16 in 17-4 ss bolting.

(d) Limited to operating temperatures ranging from 0 to 60°C (32 to 140°F).

(e) When Structure Codes 78/79 are used (pvdf inserts in the Hi and Lo side process covers), the maximum overrange is 2.1 MPa (300 psi) and temperature limits are -7 and +82°C (20 and 180°F).

(f) Static pressure rating of 40 MPa (5800 psi) with Option Code -Y.

NOTE

Static pressure zero shift for all calibrated spans can be eliminated by readjusting the zero output at nominal operating static pressure.

CAUTION

1. Exceeding the maximum overrange pressure can cause damage to the transmitter degrading its performance.
2. The transmitter could be nonfunctional after application of the proof pressure.

Elevated Zero and Suppressed Zero

For applications requiring an elevated or suppressed zero, the maximum span and the upper and lower range limits of the transmitter can not be exceeded.

Sensor Fill Fluid

Silicone Oil (DC 200) or Fluorinert (FC-43)

Minimum Allowable Absolute Pressure vs. Process Temperature

With Silicone Fill Fluid:	At full vacuum: Up to 121°C (250°F)
With Fluorinert Fill Fluid:	Refer to Figure 2.

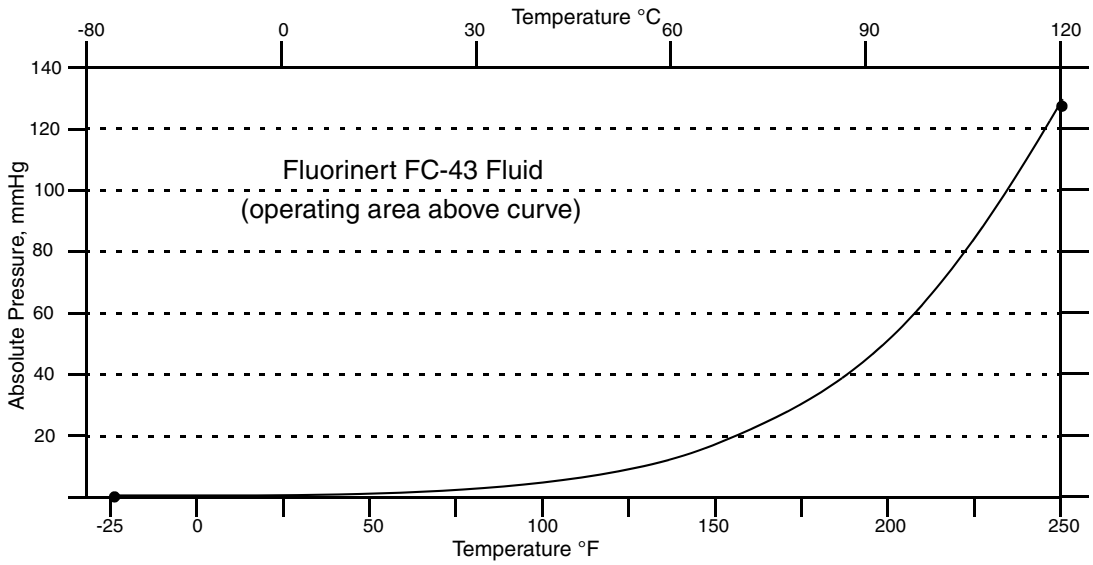

Figure 4. Minimum Allowable Absolute Pressure vs. Process Temperature with Fluorinert Fill Fluid

Mounting Position

The transmitter can be mounted in any orientation. It can be supported by the process piping. It can also be mounted directly to a vertical or horizontal pipe or surface mounted using an optional mounting bracket. The housing can be rotated up to one full turn to any desired position for access to adjustments, display, or conduit connections. See “Positioning the Housing” on page 24. The display (if present) can also be rotated in the housing to any of four different positions at 90° increments. See “Positioning the Display” on page 24.

NOTE

Position effect zero shift for all calibrated spans can be eliminated by readjusting zero output after installation.

Approximate Mass

Without Process Connectors	3.5 kg (7.8 lb)
With Process Connectors	4.2 kg (9.2 lb)
With Optional 316 ss Housing	Add 1.1 kg (2.4 lb)
With Pressure Seals	Varies with seal used

Process Connections

IDP10 transmitters are connected to the process via a 1/4 NPT thread or any one of a number of optional process connectors.

Process Wetted Materials

Diaphragm: 316L ss, Co-Ni-Cr, Hastelloy C, Monel, gold plated 316L ss, or tantalum
Covers and Process Connections: 316 ss, carbon steel, Hastelloy C, Monel, or pvdf inserts
Pressure Seals: Refer to MI 020-369

Process Pressure and Temperature Limits for Pressure Seals

Refer to MI 020-369

Electrical Connections

Field wires enter through 1/2 NPT, PG 13.5, or M20 threaded entrances on either side of the electronics housing. Leads terminate under screw terminals and washers on the terminal block in the field terminal compartment. To maintain RFI/EMI, environmental, and explosionproof ratings, unused conduit connection must be plugged with metal plug (provided), inserted to five full turns.

Field Wiring Reversal

Accidental reversal of field wiring will not damage the transmitter, provided the current is limited to 1 A or less by active current limiting or loop resistance. Sustained currents of 1 A will not damage the electronics module or sensor but could damage the terminal block assembly and external instruments in the loop.

Adjustable Damping

The transmitter response time is normally 1.0 second or the electronically adjustable setting of 0.00 (none), 0.25, 0.50, 1, 2, 4, 8, 16, or 32 seconds, whichever is greater, for a 90% recovery from an 80% input step as defined in ANSI/ISA S51.1.

Output Signal

4 to 20 mA dc linear or 4 to 20 mA dc square root; software selectable. The output is remotely configurable from the HART Communicator and locally configurable with the pushbuttons on the display.

NOTE

Only 4 to 20 mA linear output on absolute pressure, gauge pressure, and flange level transmitters.

Zero and Span Adjustments

Zero and span are adjustable from the HART Communicator. They are also adjustable at the transmitter using the display. An optional external self-contained moisture sealed pushbutton assembly allows local resetting of zero without removing the housing cover.

Power-up Time

Less than 2.0 seconds for output to reach the first valid measurement, then at the electronic damping rate to reach the final measured variable value.

Supply Voltage

Power supply must be capable of providing 22 mA when the transmitter is configured for 4 to 20 mA output. Ripple of up to 2 V pp (50/60/100/120 Hz) is tolerable, but instantaneous voltage must remain within specified range.

The supply voltage and loop load must be within specified limits. This is explained in detail in “Wiring” on page 25. A summary of the minimum requirements is listed in Table 2.

Table 2. Minimum Loop Load and Supply Voltage Requirements

	HART Communication	No HART Communication
Minimum Resistance	250 Ω	0
Minimum Supply Voltage	17 V	11.5 V

Electrical Ground Connections

The transmitter is equipped with an internal ground connection within the field wiring compartment and an external ground connection at the base of the electronics housing. To minimize galvanic corrosion, place the wire lead or contact between the captive washer and loose washer on the external ground screw. If shielded cable is used, earth (ground) the shield at the field enclosure **only**. Do **not** ground the shield at the transmitter.

HART Communicator Connection Points

The HART Communicator can be connected in the loop as shown in “Wiring” on page 25. It can also be connected directly to the transmitter at the two upper banana plug receptacles.

Test Points

The two lower banana plug receptacles (designated **CAL**) can be used to check transmitter output when configured for 4 to 20 mA. Measurements should be 100-500 mV dc for 0-100% transmitter output.

Remote Communications

The transmitter communicates bidirectionally over the 2-wire field wiring to a HART Communicator. The information that can be continuously displayed is:

- Process Measurement (expressed in one or two types of units)
- Transmitter Temperature (sensor and electronics)
- mA Output (equivalent)

The information that can be remotely displayed and reconfigured includes:

- Output in Percent Flow (square root) or Pressure Units (linear). Percent Display in Linear mode on local display is also supported.
- Zero and Span, including reranging
- Zero Elevation or Suppression
- Linear Output or Square Root Output (in some models)
- Pressure or Flow Units (from list provided)
- Temperature Sensor Failure Strategy
- Electronic Damping
- Poll Address (Multidrop mode)
- External Zero (Enable or Disable)
- Failsafe Direction
- Tag, Description, and Message
- Date of Last Calibration

Communications Format

Communication is based upon the FSK (Frequency Shift Keying) technique. The frequencies are superimposed on the transmitter power/signal leads.

4 to 20 mA Output

The transmitter sends its differential pressure measurement to the loop as a continuous 4 to 20 mA dc signal. It also communicates digitally with the HART Communicator at distances up to 3000 m (10 000 ft). Communication between the remote configurator and the transmitter does not disturb the 4 to 20 mA output signal. Other specifications are:

Data Transmission Rate:	1200 Baud
4 - 20 mA Update Rate:	30 times/second
Output when Fail Low:	3.60 mA
Output when Fail High:	21.00 mA
Output when Underrange	3.80 mA
Output when Overrange	20.50 mA
Output when Offline:	User configurable between 4 and 20 mA

Product Safety Specifications

DANGER

To prevent possible explosions and to maintain explosionproof, dust-ignitionproof protection, observe applicable wiring practices. Plug unused conduit opening with the provided metal pipe plug, which engages a minimum of five full threads.

WARNING

To maintain IEC IP66 and NEMA Type 4X protection, the unused conduit opening must be plugged. In addition, the threaded housing covers must be installed. Turn covers to seat the O-ring into the housing and then continue to hand tighten until the cover contacts the housing metal-to-metal.

NOTE

1. These transmitters have been designed to meet the electrical safety description listed in Table 3. For detailed information or status of testing laboratory approvals/certifications, contact Invensys Foxboro.
2. Wiring restrictions required to maintain electrical certification of the transmitter are provided in “Wiring” on page 25.

Table 3. Electrical Safety Specifications

Testing Laboratory, Types of Protection, and Area Classification	Application Conditions	Electrical Safety Design Code
ATEX flameproof: II 2 GD EEx d IIC, Zone 1.	Temperature Class T6 at 85°C (185°F) maximum ambient with Version 4 electronic module. Temperature Class T6, T85°C, Ta = -40 to +85°C with Version 5 electronic module.	D
ATEX intrinsically safe: II 1 GD EEx ia IIC, Zone 0.	Temperature Class T4 at 80°C (176°F), T5 at 40°C (104°F), and T6 at 40°C (104°F) maximum ambient with Version 4 electronic module. Temperature Class T4, T103°C, Ta = -40 to +80°C with Version 5 electronic module.	E
ATEX protection n: II 3 GD EEx nL IIC, Zone 2.	Temperature Class T4 at 80°C (176°F), T5 at 40°C (104°F), and T6 at 40°C (104°F) maximum ambient with Version 4 electronic module. Temperature Class T4, T85°C, Ta = -40 to +80°C with Version 5 electronic module.	N
ATEX multiple certifications, ia & ib and n. Refer to Codes E and N for details.	Applies to Codes D, E, and N.[(a)]	M
CSA intrinsically safe for Class I, Division 1, Groups A, B, C, and D; Class II, Division 1, Groups E, F, and G; Class III, Division 1. Also, Zone certified intrinsically safe Ex ia IIC and energy limited Ex nA II.	Connect per MI 020-427. Temperature Class T4A at 40°C (104°F) and T3C at 85°C (185°F) maximum ambient. Temperature Class T4 at 40°C (104°F), and T3 at 85°C (185°F) max. ambient.	C
CSA explosionproof for Class I, Division 1, Groups B, C, and D; dust-ignitionproof for Class II, Division 1, Groups E, F, and G; Class III, Division 1.	Maximum Ambient Temperature 85°C (185°F).	
CSA for Class I, Division 2, Groups A, B, C, and D; Class II, Division 2, Groups F and G; Class III, Division 2.	Temperature Class T4A at 40°C (104°F) and T3C at 85°C (185°F) maximum ambient.	
CSA field device zone certified flameproof Ex d IIC. Also, all certifications of Code C above.	Maximum Ambient Temperature 85°C (185°F).	B

Table 3. Electrical Safety Specifications (Continued)

Testing Laboratory, Types of Protection, and Area Classification	Application Conditions	Electrical Safety Design Code
FM intrinsically safe for Class I, Division 1, Groups A, B, C, and D; Class II, Division 1, Groups E, F, and G; Class III, Division 1. Also, Zone certified intrinsically safe AEx ia IIC.	Connect per MI 020-427. Temperature Class T4A at 40°C (104°F) and T4 at 85°C (185°F) maximum ambient. Temperature Class T4 at 85°C (185°F) maximum ambient.	F
FM explosionproof for Class I, Division 1, Groups B, C, and D; dust-ignitionproof for Class II, Division 1, Groups E, F, and G; Class III, Division 1.	Temperature Class T6 at 80°C (176°F) and T5 at 85°C (185°F) maximum ambient.	
FM nonincendive for Class I, Division 2, Groups A, B, C, and D; Class II, Division 2, Groups F and G; Class III, Division 2.	Temperature Class T4A at 40°C (104°F) and T4 at 85°C (185°F) maximum ambient.	
FM field device zone certified flameproof AEx d IIC. Also, all certifications of Code F above.	Temperature Class T6 at 75°C (167°F) maximum ambient.	G
SAA Ex, ia, IIC, intrinsically safe, Gas Group IIC, Zone 0.	Temperature Class T4 at 85°C (185°F) maximum ambient.	H
SAA EX, d, IIC, flameproof, Gas Group IIC, Zone 1.	Temperature Class T5 at 60°C (140°F) maximum ambient.	A
SAA Ex n, IIC, nonincendive, Gas Group IIC, Zone 2.	Temperature Class T6.	K
IECEx intrinsically safe: Ex ia IIC.	Applies to Version 5 electronic module. Temperature Class T4, Ta = -40 to +80°C.	T
IECEx protection n: Ex nL IIC	Applies to Version 5 electronic module. Temperature Class T4, Ta = -40 to +80°C.	U
IECEx flameproof: Ex d IIC	Applies to Version 5 electronic module. Temperature Class T6, Ta = -40 to +75°C.	V

(a) User must permanently mark (check off in rectangular block on data plate) one type of protection only (ia and ib, d, or n). This mark cannot be changed once it is applied.

2. Installation

CAUTION

To avoid damage to the transmitter sensor, do not use any impact devices, such as an impact wrench or stamping device, on the transmitter.

NOTE

1. The transmitter should be mounted so that any moisture condensing or draining into the field wiring compartment can exit through one of the two threaded conduit connections.
2. Use a suitable thread sealant on all connections.

Transmitter Mounting

The IDP Series differential pressure transmitter can be supported by the process piping or mounted to a vertical or horizontal pipe or surface using the optional mounting bracket. See figures below. For dimensional information, refer to DP 020-446.

NOTE

1. If the transmitter is not installed in the vertical position, readjust the zero output to eliminate the position zero effect.
2. When structure codes 78/79 are used (pvdf inserts) with the IDP10 transmitters, the process connection must be made directly to the pvdf inserts in the high and low side process covers.

Process Mounting

With process mounting, the transmitter mounted to and supported by the process piping.

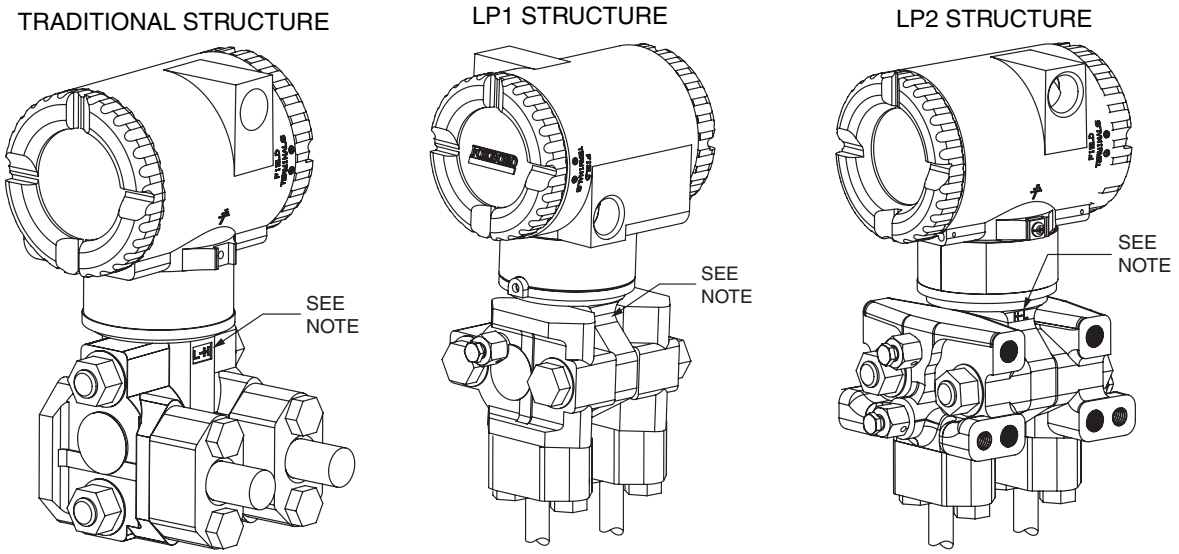

NOTE: MARK INDICATING LOW AND HIGH PRESSURE SIDE OF TRANSMITTER

Figure 5. Typical Mounting of an IDP10 Transmitter Supported by Process Piping

Manifold Mounted Transmitter

With manifold mounting, the transmitter is mounted to and supported by a bypass manifold. The bypass manifold can be mounted to a DN50 or 2 inch pipe with an optional mounting bracket.

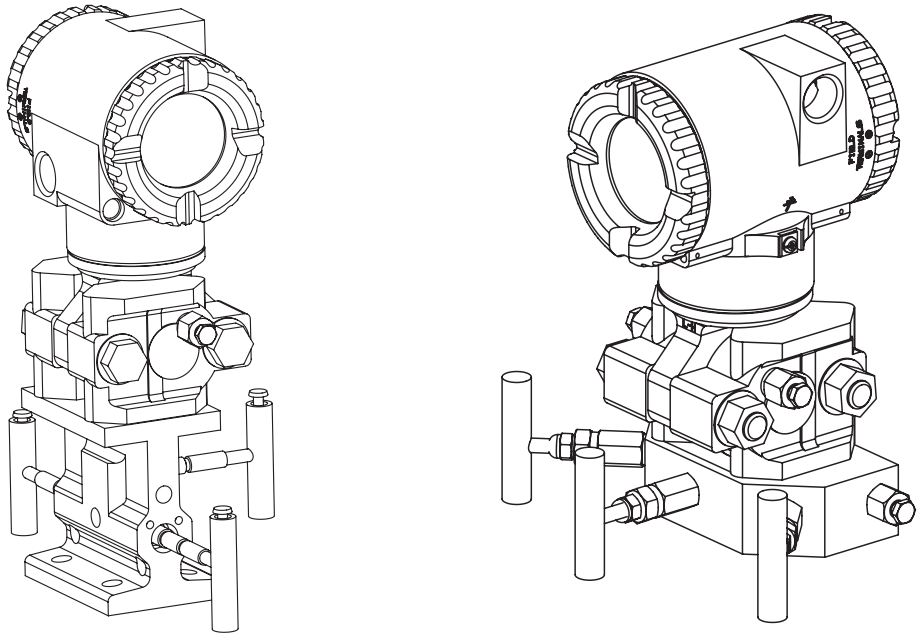

BM-M4A MANIFOLD MB3VIS-4 MANIFOLD

Figure 6. Typical Mounting of an IDP10 Transmitter Supported by a Bypass Manifold

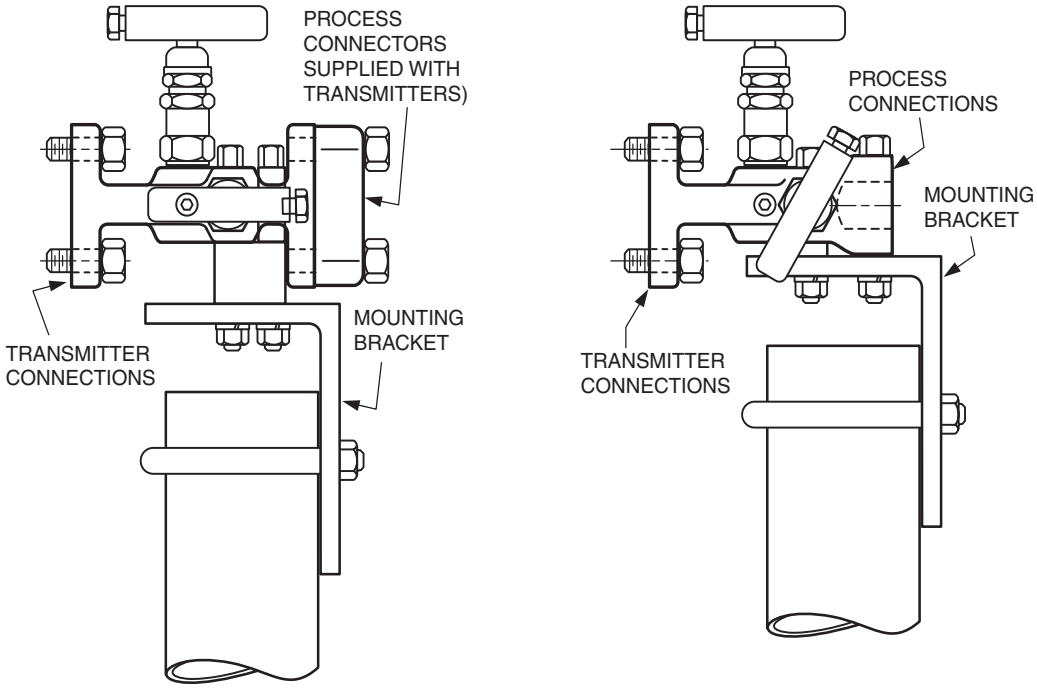

BM-M4A BM-M4T

Figure 7. Typical Mounting of BM-M4A and BM-M4T Manifold with -AM Bracket

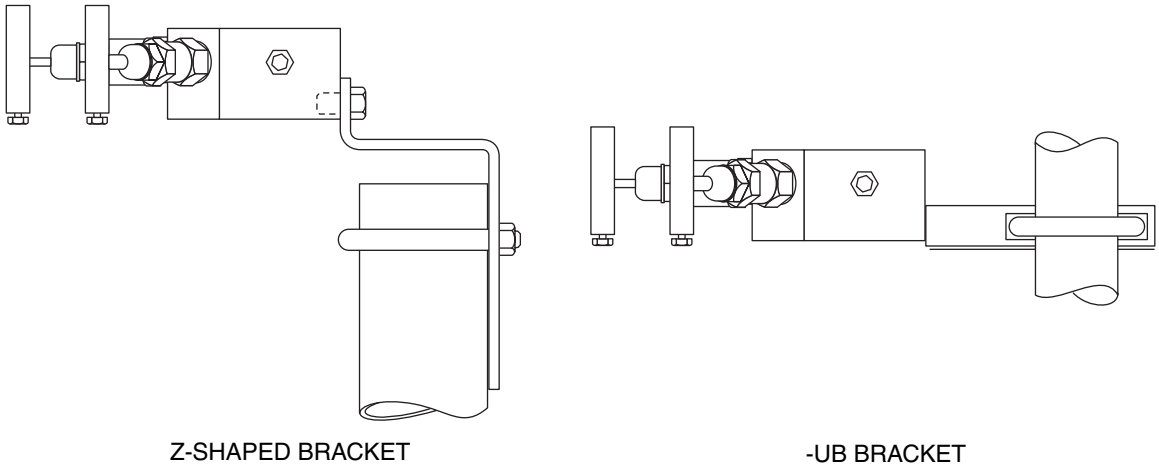

Figure 8. Typical Mounting of MB3VIS-4 or MB5VIS-4 Manifold with Z-Shaped and -UB Bracket

Transmitter Mounted on a Coplanar™ Manifold

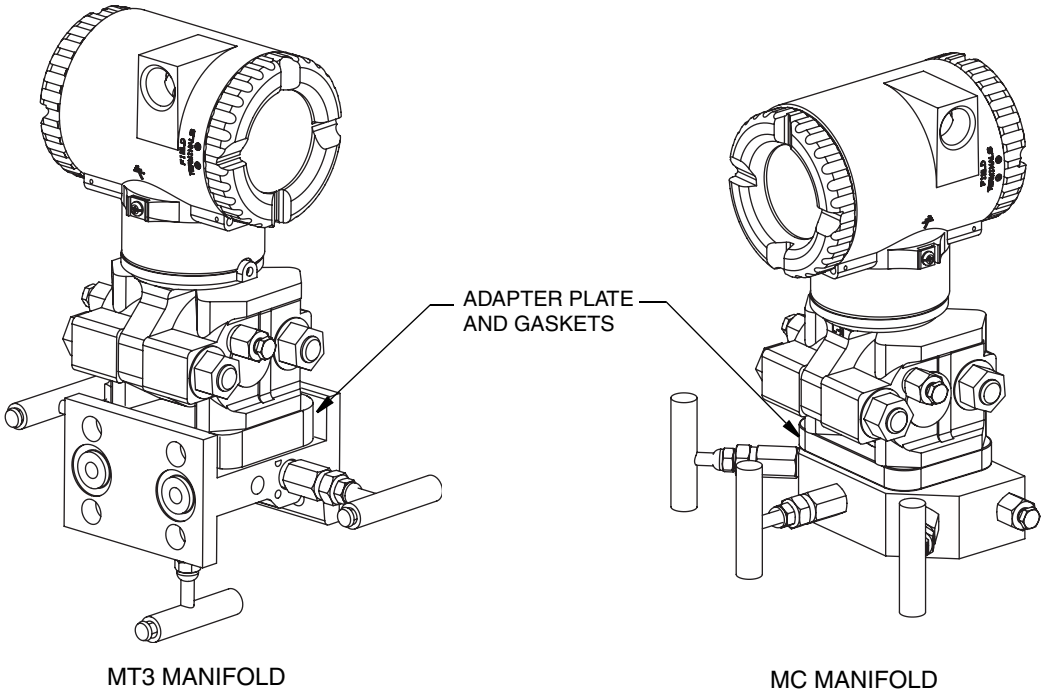

Figure 9. Typical Mounting of IDP10 Transmitter on Coplanar Manifold

Pipe or Surface Mounting

To mount the transmitter to a pipe or surface, use the Standard Mounting Bracket Set (Model Code Option -M1 or M2) or Universal Bracket Mounting Set (Model Code Option -M3).

Standard Mounting Bracket

The transmitter (with either traditional or LP2 low-profile structures) can be mounted to a vertical or horizontal, DN 50 or 2-in pipe using a standard bracket. See Figures 10 and 11 for details of a standard bracket and examples of different mounting situations. Secure the mounting bracket to the transmitter using the four screws provided. Mount the bracket to the pipe. To mount to a horizontal pipe, turn the

U-bolt 90° from the position shown. The mounting bracket can also be used for wall mounting by securing the bracket to a wall using the U-bolt mounting holes.

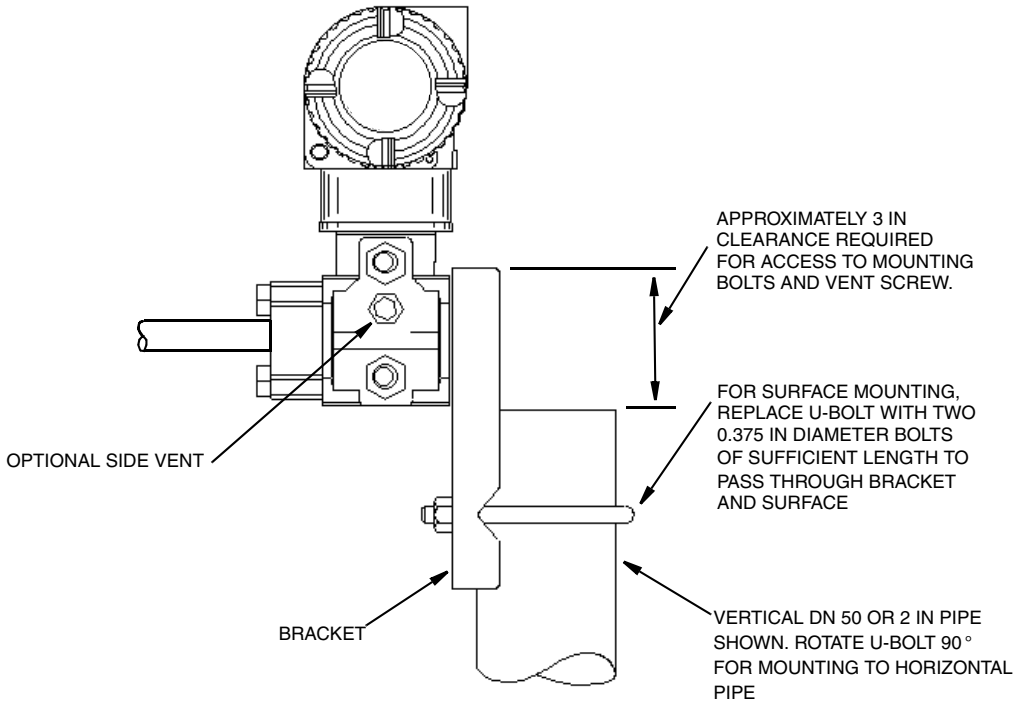

Figure 10. Pipe or Surface Mounted Transmitter Using a Standard Bracket

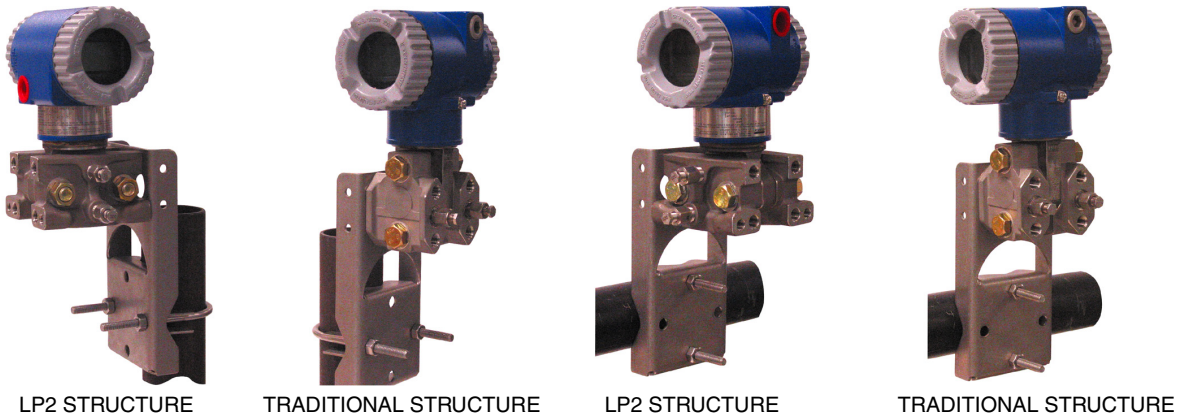

Figure 11. Examples of Mounting With a Standard Bracket

Universal Mounting Bracket

The transmitter (with either traditional or LP2 low-profile structure) can be mounted in a myriad of positions to a vertical or horizontal, DN 50 or 2-in pipe using a universal bracket. See the following figures for details of a universal bracket and examples of different mounting situations. Secure the mounting bracket to the transmitter using the two long or four short screws provided. Mount the bracket to the pipe. The mounting bracket can also be used for wall mounting by securing the bracket to a wall using the U-bolt mounting holes.

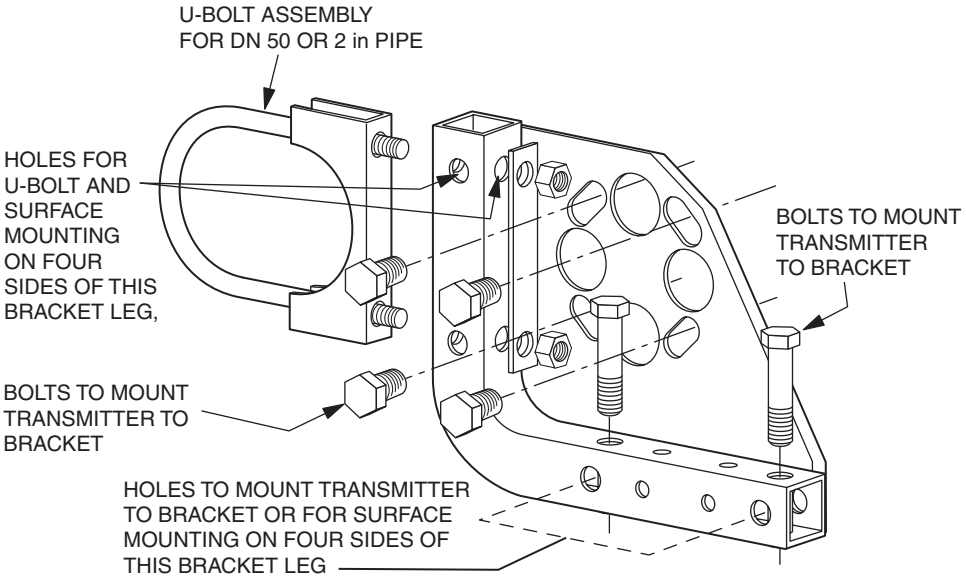

Figure 12. Details of a Universal Bracket

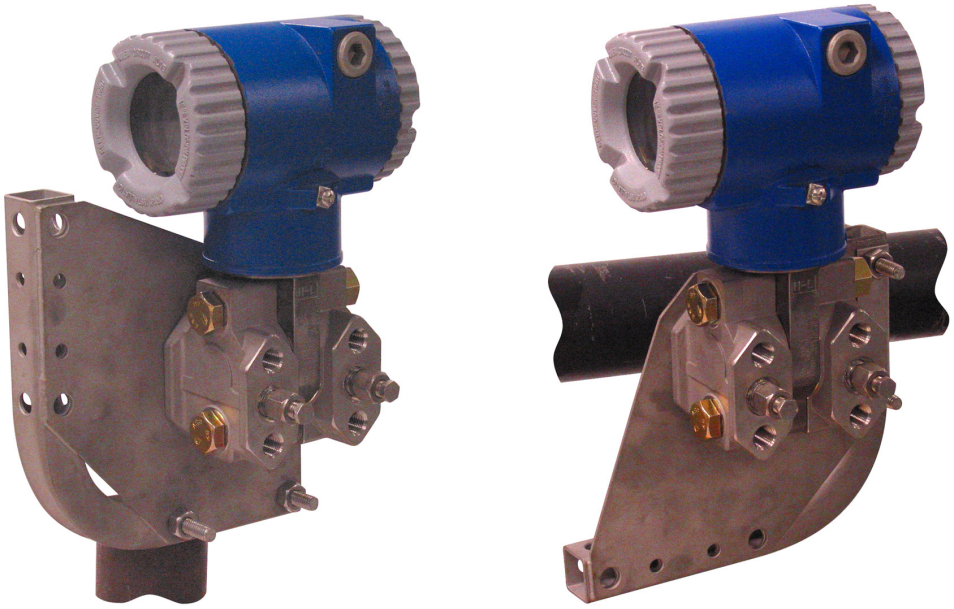

VERTICAL PIPE HORIZONTAL PIPE

Figure 13. Mounting a Transmitter with Traditional Structure Using a Universal Bracket

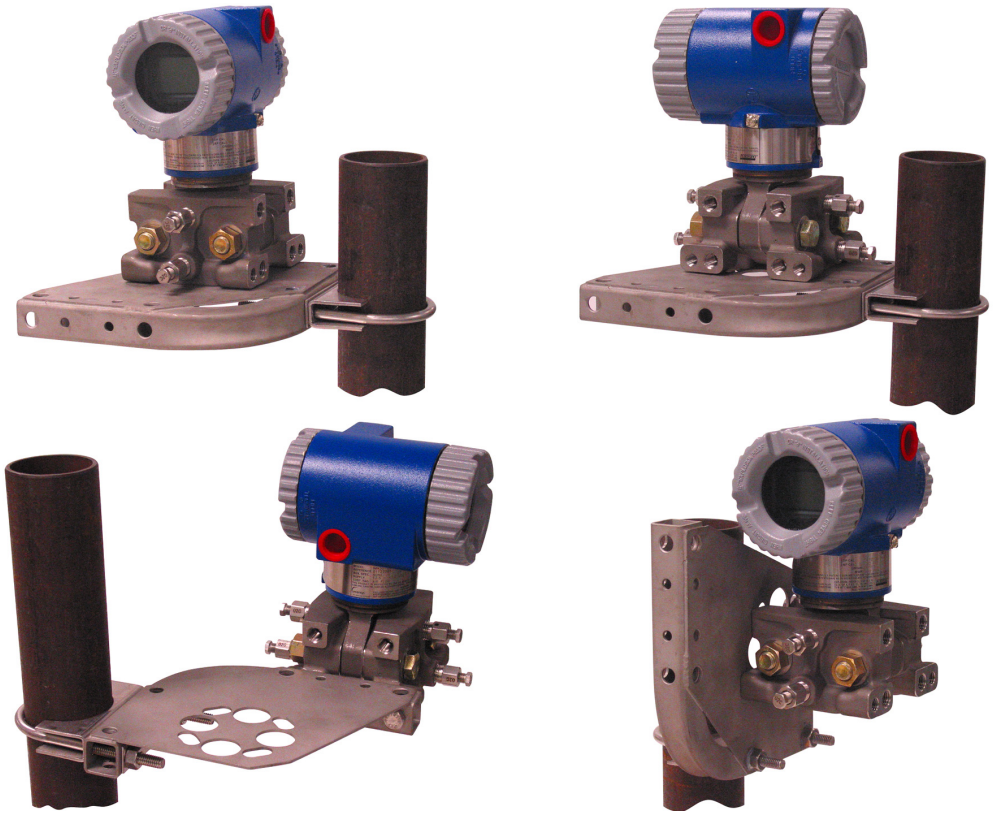

Figure 14. Vertical Pipe Mounting a Transmitter with LP2 Structure Using a Universal Bracket

Figure 15. Horizontal Mounting a Transmitter with LP2 Structure Using a Universal Bracket

Venting and Draining

Traditional Structure

Sensor cavity venting and draining is provided for both vertical and horizontal mounting. For vertical mounted units, draining is via a drain screw and venting is possible with side vents (Option Code -V). For horizontal mounted units, the unit is self draining and venting is via a vent screw.

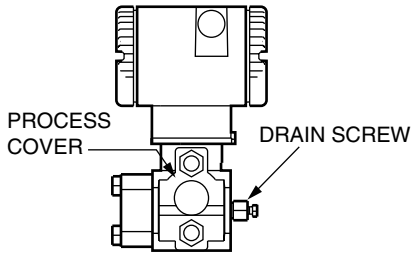

Figure 16. Vertical Mounting - Cavity Draining

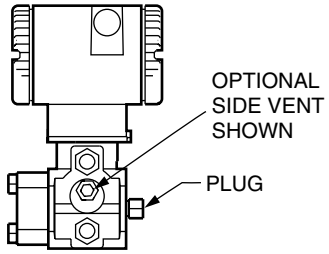

Figure 17. Vertical Mounting - Cavity Venting

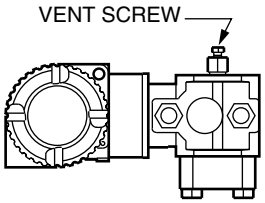

Figure 18. Horizontal Mounting - Cavity Venting

LP1 Low Profile Structure

Sensor cavity venting and draining is provided for both vertical and horizontal mounting. For vertical mounted units, the transmitter is self draining and venting is via a vent screw. For horizontal mounted units, the transmitter can simply be ‘turned over’ (rotated 180 degrees) to orient the high and low pressure sides in the preferred locations. There is no need to unbolt the process covers. If the transmitter is connected with a length of impulse piping, such piping should slope up to the transmitter for gas applications and down for liquid applications.

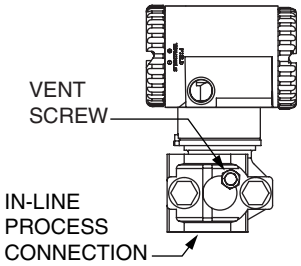

Figure 19. Vertical Mounting - Cavity Venting

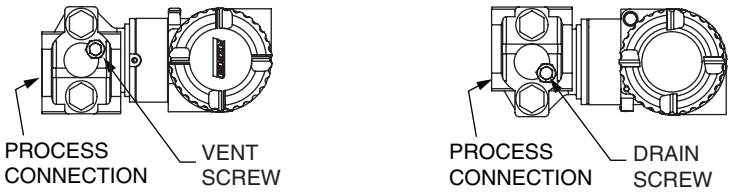

Figure 20. Horizontal Mounting - Cavity Venting and Draining

LP2 Low Profile Structure

The transmitter with LP2 low profile structure had a full-featured vent and drain design with separate vent and drain screws positioned in each cover for complete venting and draining from the sensor cavity.

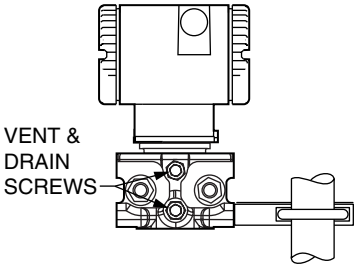

Figure 21. Cavity Venting and Draining

Installation of Flow Measurement Piping

Figures 22 and 23 show typical installations with horizontal and vertical process pipes.

The transmitters are shown below the level of the pressure connections at the pipe (usual arrangement, except for gas flow without a seal liquid), and with filling tees in the lines to the transmitter (for a seal liquid).

If the process fluid being measured must not come in contact with the transmitter, the transmitter lines must be filled with a suitable seal liquid (see procedure in next section). In such a case, the transmitter must be mounted below the level of the pressure connections at the pipe. With steam flow, the lines are filled with water to protect the transmitter from the hot steam. The seal liquid (or water) is added to the lines through the filling tees. To prevent unequal heads on the transmitter, the tees must be at the

same elevation and the transmitter must be mounted vertically (as shown). If a seal liquid is not required, elbows can be used in place of the tees.

Tighten drain plugs and optional vent screws to 20 N·m (15 lb·ft). Tighten the four process connector bolts to a torque of 61 N·m (45 lb·ft).

Note that the low and high pressure sides of the transmitter are identified by an L-H marking on the side of the sensor above the warning label.

With medium viscosity seal liquids and/or long transmitter lines, larger valve sizes should be used.

NOTE

1. With a **horizontal** line, pressure connections at the pipe should be at the side of the line. However, with gas flow without a seal liquid, connections should be at top of line.
2. With a **vertical** line, flow should be upwards.
3. For **liquid** or **steam** flow, the transmitter should be mounted **lower** than the pressure connections at the pipe.
4. For **gas** flow **without** a seal liquid, the transmitter should be mounted **above** the pressure connections at the pipe; for **gas** flow **with** a seal liquid, the transmitter should be mounted **below** the pressure connections.
5. Invensys Foxboro recommends the use of snubbers in installations prone to high levels of fluid pulsations.

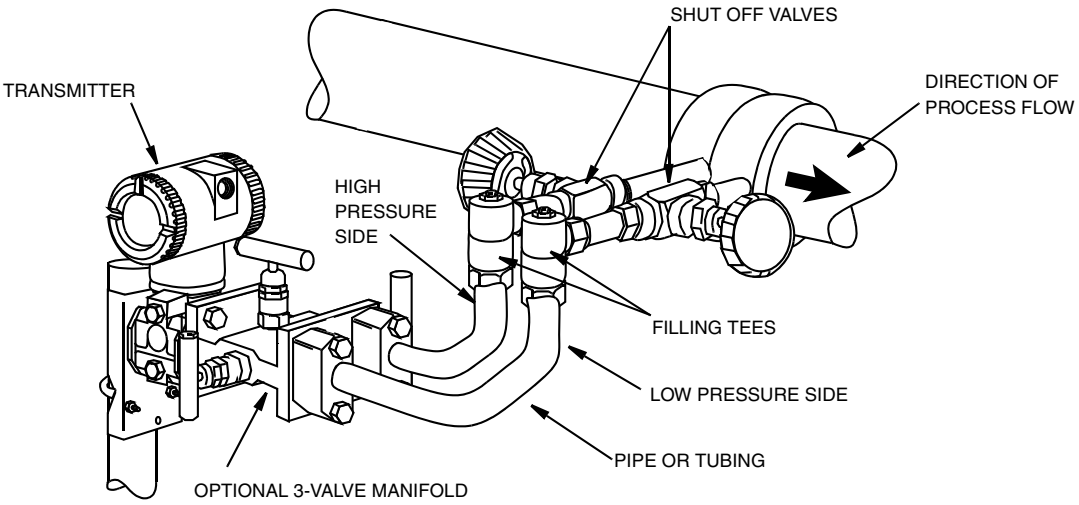

Figure 22. Example of Horizontal Process Line Installation

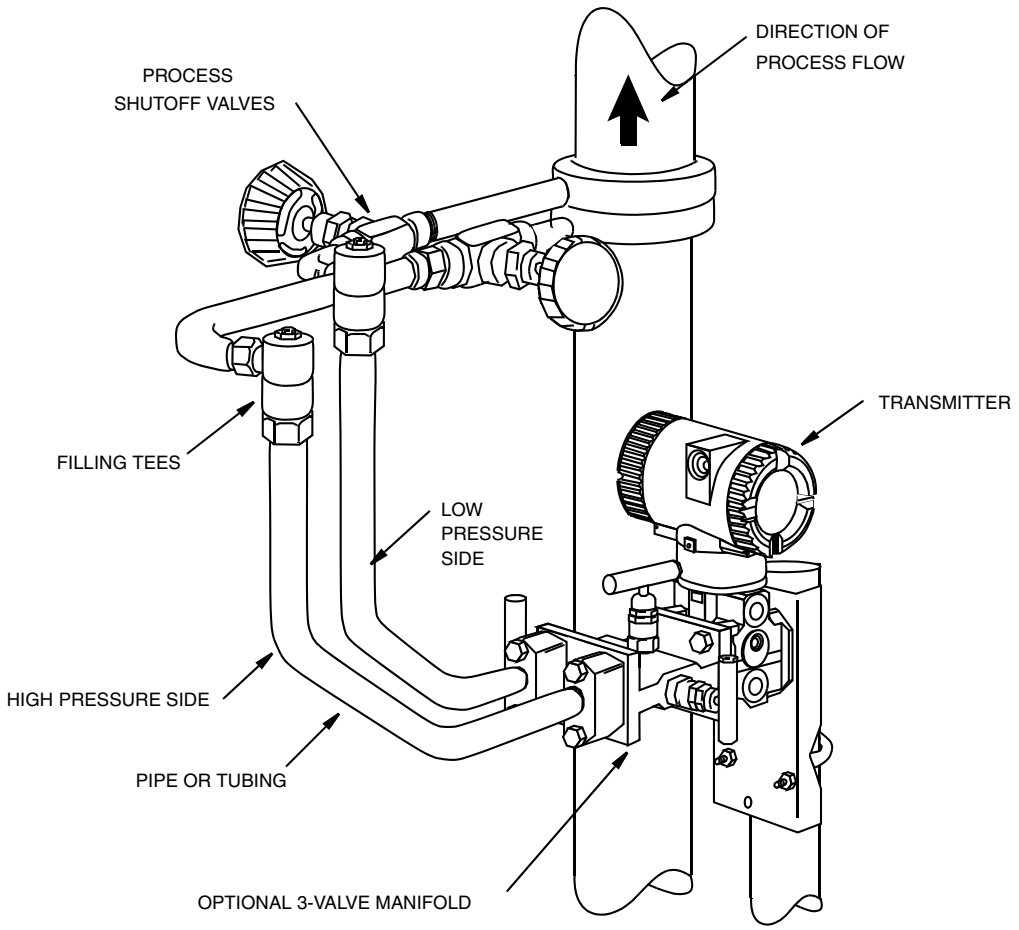

Figure 23. Example of Vertical Process Line Installation

Filling System with Seal Liquid

If the process fluid being measured must not come in contact with the transmitter, the transmitter lines must be filled with a suitable seal liquid. The procedure to do this is as follows:

1. If the transmitter is in service, follow the procedure for “Taking a Differential Pressure Transmitter Out of Operation” on page 30.
2. Close both process shutoff valves.
3. Open all three valves on the 3-valve manifold.
4. Partially open the vent screws on the transmitter until all air has been forced out of the transmitter body and lines. Close the vent screws.
5. Refill the tee connections. Replace the plugs and close the bypass valve. Check for leaks.
6. Follow the procedure for “Putting a Differential Pressure Transmitter Into Operation” on page 30.

CAUTION

To prevent loss of seal liquid and contamination of process fluid, never open both process shutoff valves and manifold shutoff valves if the bypass valve is open.

Positioning the Housing

The transmitter housing (topworks) can be rotated up to one full turn in the counterclockwise direction when viewed from above for optimum access to adjustments, display, or conduit connections.

WARNING

If the electronics housing is removed for any reason, it must be hand tightened fully. Then engage the set screw until it bottoms out and back it off 1/8th turn. Fill the set screw recess with red lacquer (Foxboro Part number X0180GS or equivalent). The housing then may be rotated up to one full turn in a counterclockwise direction for optimum access to adjustments.

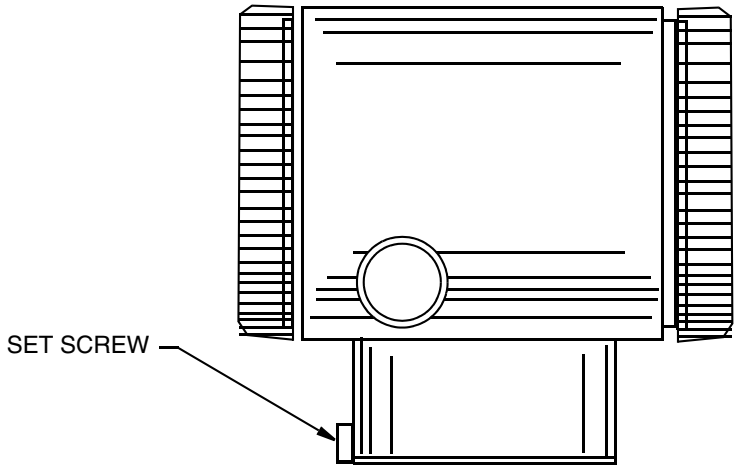

Figure 24. Housing Set Screw Location

Positioning the Display

The display (optional in some models) can be rotated within the housing to any of four positions at 90° increments. To do this, grasp the two tabs on the display and rotate it about 10° in a counterclockwise direction. Pull out the display. Ensure that the O-ring is fully seated in its groove in the display housing. Turn the display to the desired position, reinsert it in the electronics module, aligning the tabs on the sides of the assembly, and twist it in the clockwise direction.

CAUTION

Do **not** turn the display more than 180° in any direction. Doing so could damage its connecting cable.

Setting the Write Protect Jumper

Your transmitter has write protection capability. This means that the external zero, local display, and remote communications can be prevented from writing to the electronics. Write protection is set by moving a jumper that is located in the electronics compartment behind the optional display. To activate write protection, remove the display as described in the previous section, then remove the jumper or move it to the lower position as shown on the exposed label. Replace the display.

Cover Locks

Electronic housing cover locks, shown in Figure 25, are provided as standard with certain agency certifications and as part of the Custody Transfer Lock and Seal option. To lock the covers, unscrew the locking pin until approximately 6 mm (0.25 in) shows, lining up the hole in the pin with the hole in the

housing. Insert the seal wire through the two holes, slide the seal onto the wire ends and crimp the seal

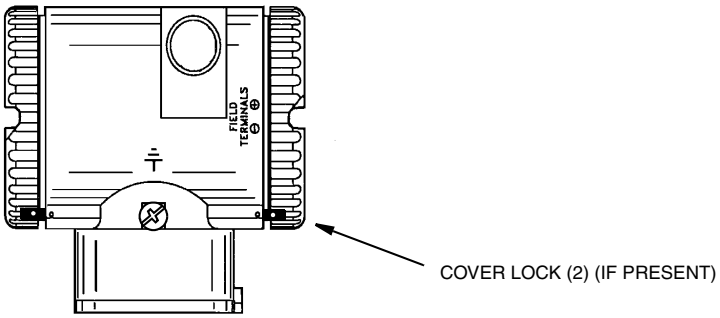

Figure 25. Cover Lock Location

Wiring

The installation and wiring of your transmitter must conform to local code requirements.

WARNING

ATEX requires that when the equipment is intended to be used in an explosive atmosphere caused by the presence of combustible dust, cable entry devices and blanking elements shall provide a degree of ingress protection of at least IP6X. They shall be suitable for the conditions of use and correctly installed.

NOTE

Invensys Foxboro recommends the use of transient/surge protection in installations prone to high levels of electrical transients and surges.

Accessing Transmitter Field Terminals

For access to the field terminals, thread the cover lock (if present) into the housing to clear the threaded cover and remove the cover from the field terminals compartment as shown in Figure 26. Note that the embossed letters **FIELD TERMINALS** identify the proper compartment.

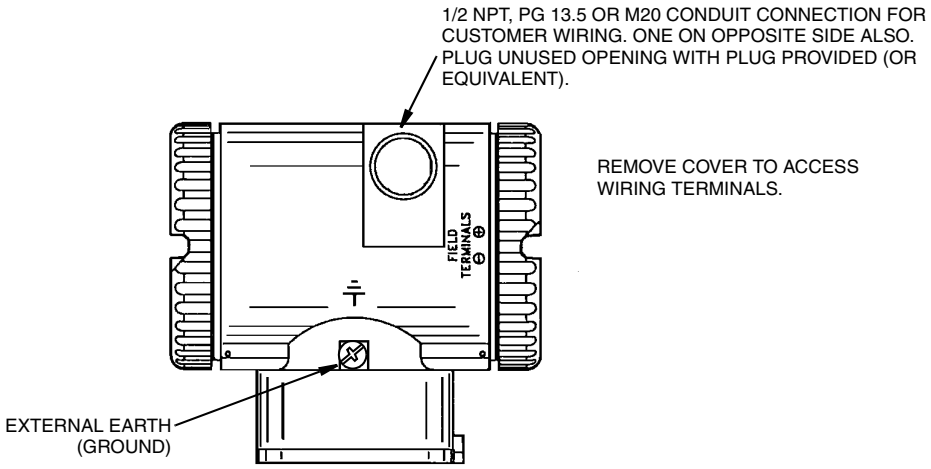

Figure 26. Accessing Field Terminals

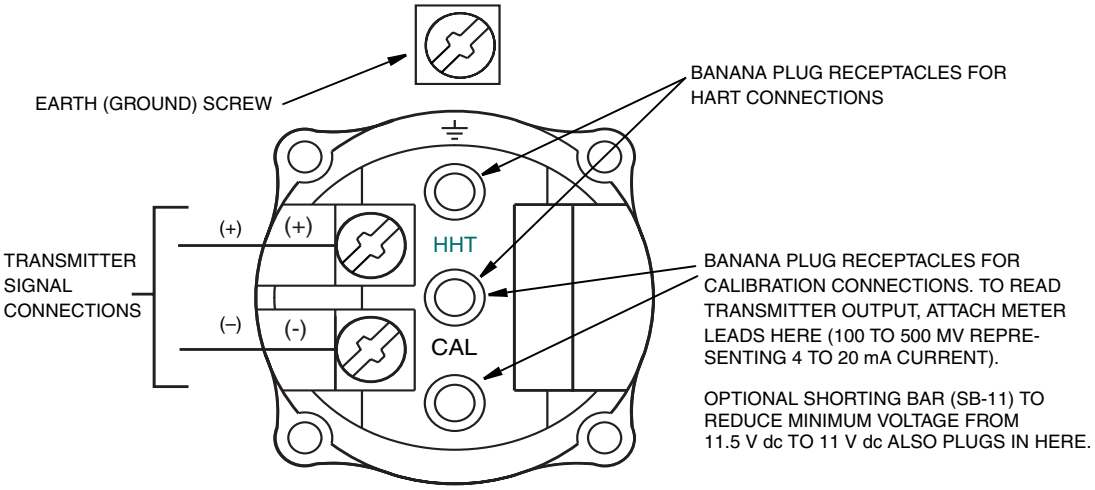

Figure 27. Identification of Field Terminals

Wiring the Transmitter to a Control Loop

When wiring the transmitter, the supply voltage and loop load must be within specified limits. The supply output load vs. voltage relationship is:

R_{MAX} = 47.5 (V - 11.5) and is shown in Figure 28.

NOTE

The relationship when the optional shorting bar is used is:

R_{MAX} = 46.8 (V - 11).

Any combination of supply voltage and loop load resistance in the shaded area can be used. To determine the loop load resistance (transmitter output load), add the series resistance of each component in the loop, excluding the transmitter. The power supply must be capable of supplying 22 mA of loop current.

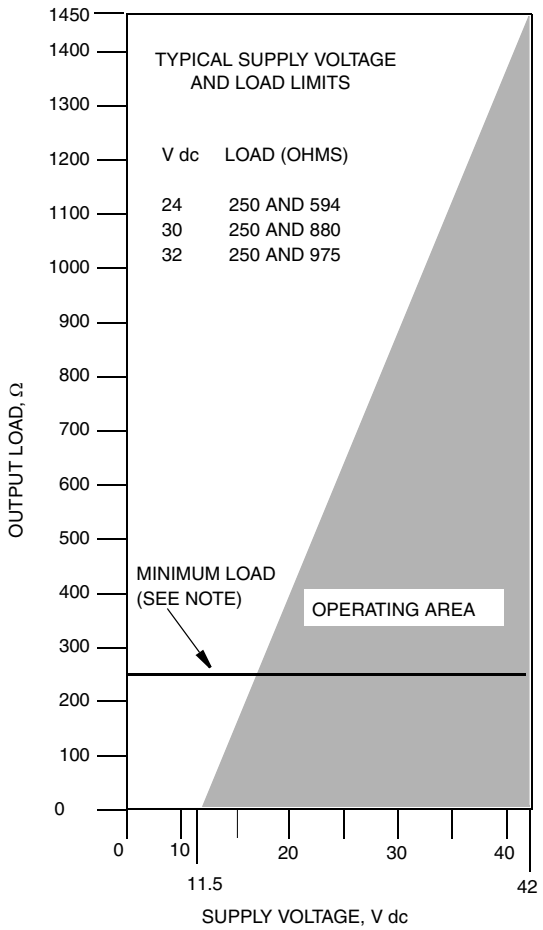

NOTES:
1. THE MINIMUM LOAD FOR THE HART COMMUNICATOR IS 250 Ω.
2. THE TRANSMITTER CAN FUNCTION WITH AN OUTPUT LOAD LESS THAN THE MINIMUM, PROVIDED THAT A REMOTE CONFIGURATOR IS **NOT** CONNECTED TO IT. CONNECTING A REMOTE CONFIGURATOR WHILE OPERATING IN THIS AREA COULD CAUSE OUTPUT DISTURBANCES AND/OR COMMUNICATION PROBLEMS.

Figure 28. Supply Voltage and Loop Load

Examples:

1. For a loop load resistance of 880 Ω, the supply voltage can be any value from 30 to 42 V dc.
2. For a supply voltage of 24 V dc, the loop load resistance can be any value from 250 to 594 Ω (zero to 594 Ω without a HART Communicator connected to the transmitter).

To wire one or more transmitters to a power supply, proceed with the following steps.

1. Remove the cover from the transmitter field terminals compartment.

2. Run signal wires (0.50 mm^2 or 20 AWG, typical) through one of the transmitter conduit connections. Use twisted single pair to protect the 4 to 20 mA output and/or remote communications from electrical noise. Maximum recommended length for signal wires is:

- 3050 m (10,000 ft) **using single pair cable** and adhering to requirements of HART physical layer implementation defined in HART Document HCF_SPEC-53. Use CN=1 when calculating max. lengths.
- 1525 m (5000 ft) in a multidrop (15 devices maximum) mode. Screened (shielded) cable could be required in some locations.

— NOTE —

Do not run transmitter wires in same conduit as mains (ac power) wires.

3. If shielded cable is used, earth (ground) the shield at the power supply **only**. Do not ground the shield at the transmitter.

4. Plug unused conduit connection with the 1/2 NPT, PG 13.5 or M20 metal plug provided (or equivalent). To maintain specified explosionproof and dust-ignitionproof protection, plug must engage a **minimum** of five full threads.
5. Connect an earth (ground) wire to the earth terminal in accordance with local practice.

CAUTION

If the signal circuit must be earthed (grounded), it is preferable to do so at the negative terminal of the dc power supply. To avoid errors resulting from earth loops or the possibility of short-circuiting groups of instruments in a loop, there should be only one earth in a loop.

6. Connect the power supply and receiver loop wires to the "+" and "–" terminal connections.
7. Connect receivers (such as controllers, recorders, indicators) in series with power supply and transmitter as shown in Figure 29.
8. Reinstall the cover onto the housing by rotating it clockwise to seat the O-ring into the housing and then continue to hand tighten until the cover contacts the housing metal-to-metal. If cover locks are present, lock the cover per the procedure described in "Cover Locks" on page 24.
9. If wiring additional transmitters to the same power supply, repeat Steps 1 through 8 for each additional transmitter. The setup with multiple transmitters connected to a single power supply is shown in Figure 30.
10. A HART Communicator or PC-Based Configurator can be connected in the loop between the transmitter and the power supply as shown in Figures 29 and 30. Note that a minimum of 250 Ω must separate the power supply from the HART Communicator or PC-Based Configurator.

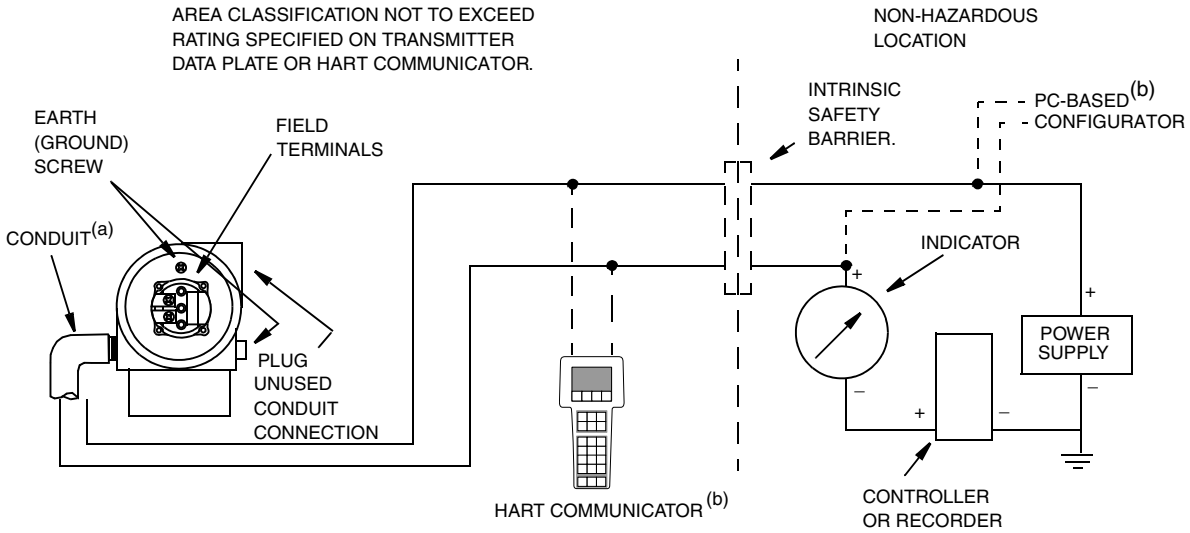

(a) RUN CONDUIT DOWN TO AVOID MOISTURE BUILDUP IN TERMINALS COMPARTMENT.
(b) THERE MUST BE AT LEAST 250 Ω TOTAL RESISTANCE BETWEEN THE HART COMMUNICATOR OR PC-BASED CONFIGURATOR AND THE POWER SUPPLY.

Figure 29. Loop Wiring Transmitters

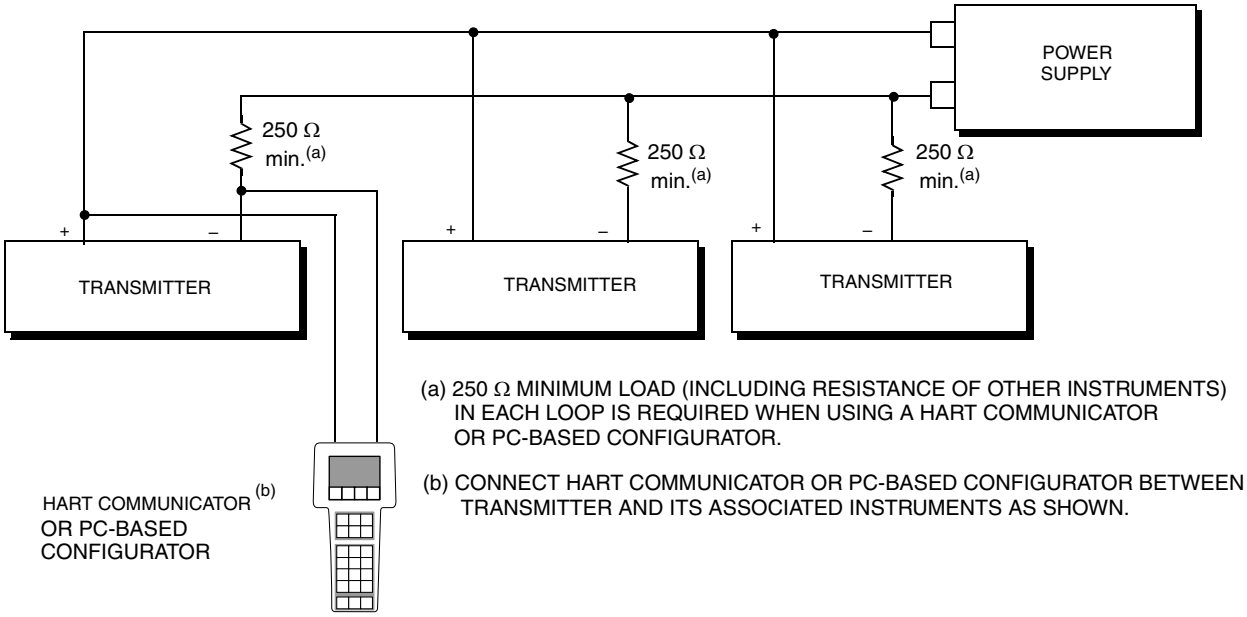

Figure 30. Wiring Several Transmitters to a Common Power Supply

Multidrop Communication

"Multidropping" refers to the connection of several transmitters to a single communications transmission line. Communications between the host computer and the transmitters takes place digitally with the analog output of the transmitter deactivated. With the HART communications protocol, up to 15 transmitters can be connected on a single twisted pair of wires or over leased telephone lines.

The application of a multidrop installation requires consideration of the update rate necessary from each transmitter, the combination of transmitter models, and the length of the transmission line. Multidrop installations are not recommended where Intrinsic Safety is a requirement. Communication with the transmitters can be accomplished with any HART compatible modem and a host implementing the HART protocol. Each transmitter is identified by a unique address (1-15) and responds to the commands defined in the HART protocol.

Figure 31 shows a typical multidrop network. Do not use this figure as an installation diagram. Contact the HART Communications Foundation, (512) 794-0369, with specific requirements for multidrop applications.

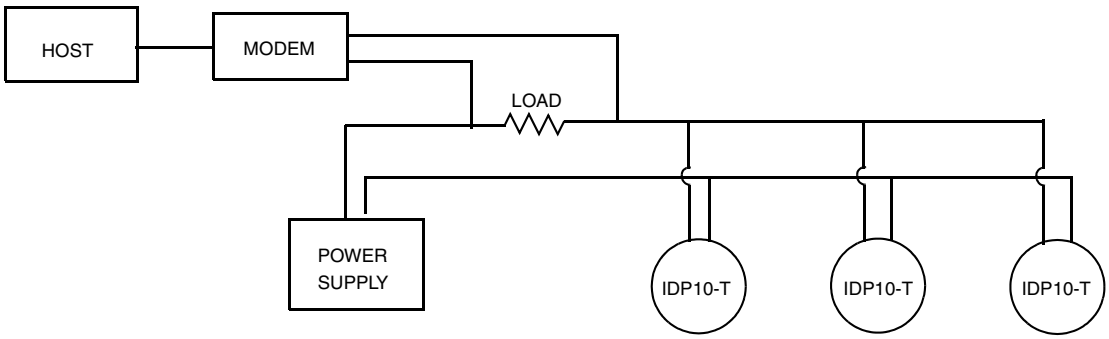

Figure 31. Typical Multidrop Network

The HART Communicator can operate, configure, and calibrate IASPT transmitters with HART communication protocol in the same way as it can in a standard point-to-point installation.

NOTE

IASPT transmitters with HART communication protocol are set to poll address 0 (**POLLADR 0**) at the factory, allowing them to operate in the standard point-to-point manner with a 4 to 20 mA output signal. To activate multidrop communication, the transmitter address must be changed to a number from 1 to 15. Each transmitter must be assigned a unique number on each multidrop network. This change deactivates the 4 to 20 mA analog output.

Connecting the Transmitter to an I/A Series System

The transmitter can also send its measurement to an I/A Series system as a digital signal via an FBM214/215. Wiring terminations at the transmitter are the same as described above. For other system wiring details, refer to the installation instructions provided with the I/A Series system.

Putting a Differential Pressure Transmitter Into Operation

The following procedure explains how to sequence the valves in your flow measurement piping or optional bypass manifold to ensure that your transmitter is not overranged and that seal liquid is not lost. Refer to Figures 22 and 23.

NOTE

This procedure assumes that the process shutoff valves are open.

1. Make sure that both upstream and downstream manifold valves are closed.
2. Make sure that the bypass valve is open.
3. Slowly open the upstream manifold valve.
4. Close the bypass valve.
5. Slowly open the downstream manifold valve.

Taking a Differential Pressure Transmitter Out of Operation

The following procedure explains how to sequence the valves in your flow measurement piping or optional bypass manifold to ensure that your transmitter is not overranged and that seal liquid is not lost. Refer to the Figures 22 and 23.

NOTE

This procedure assumes that the process shutoff valves are open.

1. Close the downstream manifold valve.
2. Close the upstream manifold valve.
3. Open the bypass valve.
4. Carefully open the vent screw to release any residual pressure before disconnecting lines.

WARNING

When venting pressure from the transmitter, wear suitable protective equipment to prevent possible injury from process material, temperature, or pressure.

3. Operation Via Local Display

A local display, as shown in Figure 32, has two lines of information. The upper line is a 5-digit numeric display (4-digit when a minus sign is needed); the lower line is a 7-digit alphanumeric display. The display provides local indication of measurement information.

With Version 4 firmware, the primary (M1) measurement is normally displayed. To view the secondary (M2) measurement, press the **Enter** button while in normal operating mode. Press the **Next** or **Enter** button to return to the primary measurement. If left in M2 display, an M2 message blinks in the lower right of the display. If power to the transmitter is interrupted, the display reverts to the M1 display.

With Version 5 firmware, the display can be configured to meet your specific needs. If configured **Show 1**, M1 is displayed. If configured **Show 2**, M2 is displayed. To temporarily view the alternate measurement, press the **Enter** button. After showing this measurement for a brief period, the display reverts to the configured display. If configured **Toggle**, the display toggles between M1 and M2. When M2 is displayed, an M2 message blinks in the lower right of the display.

The display also provides a means for reranging, calibration, and configuration, viewing the database, testing the display, and reranging the transmitter via the 2-button keypad. You can access these operations by means of a multi-level menu system. Entry to the Mode Select menu is made (from normal operating mode) by pressing the **Next** button. You can exit this menu, restore your prior calibration or configuration, and return to the normal operating mode at any time by going to **Cancel** and pressing the **Enter** button.

The top level structure diagrams for Version 4 and 5 firmware are shown in Figures 33 and 34 respectively.

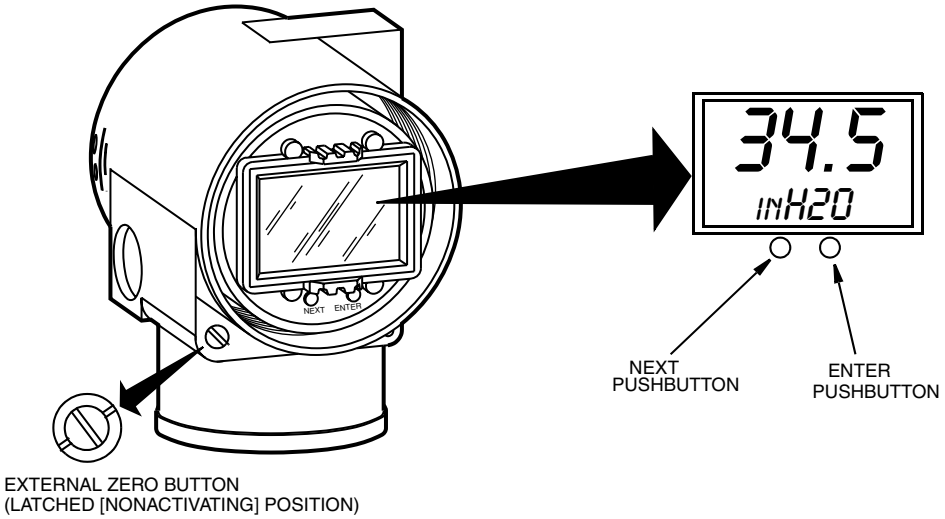

Figure 32. Local Display Module

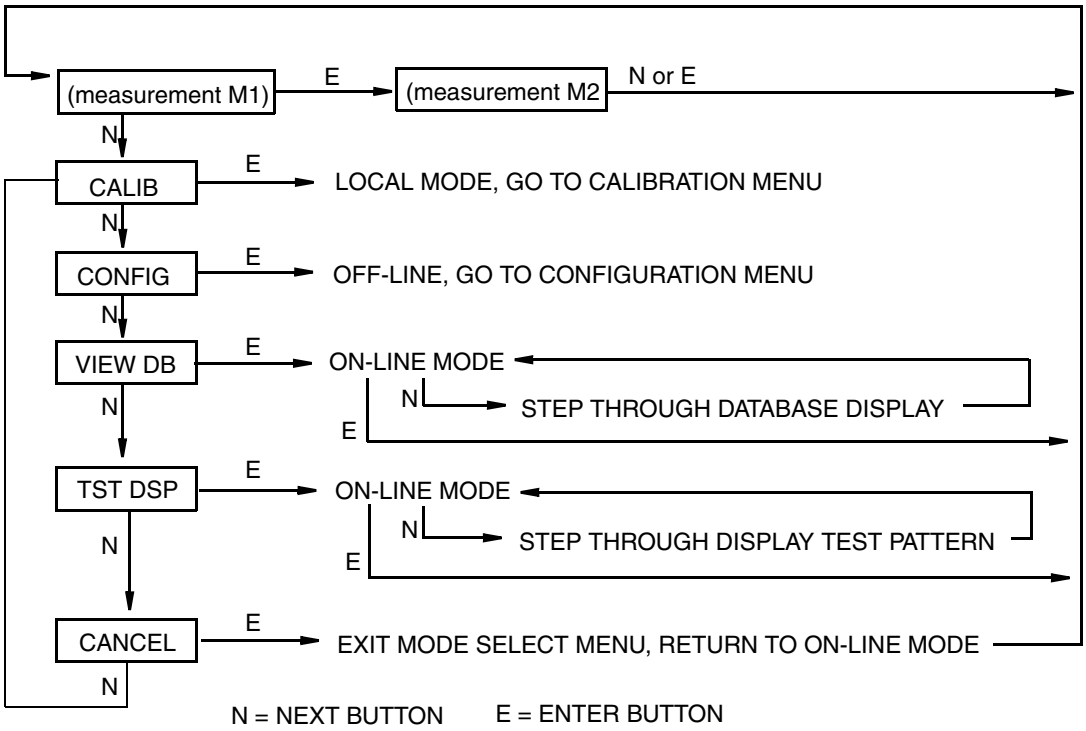

Figure 33. Top Level Structure Diagram (Version 4 Firmware)

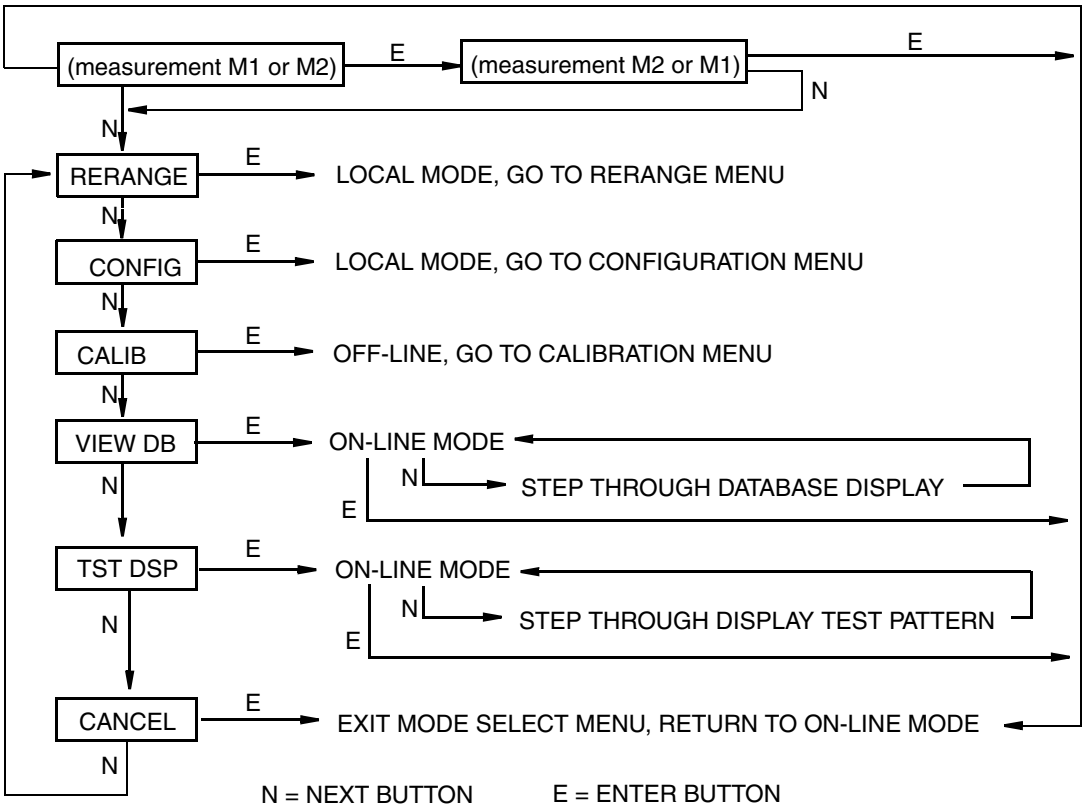

Figure 34. Top Level Structure Diagram (Version 5 Firmware)

Entering Numerical Values

The general procedure for entering numerical values in Calibration and Configuration is as follows:

1. At the appropriate prompt, press the **Enter** button. The display shows the last (or default) value with the first digit flashing.
2. Use the **Next** button to select the desired first digit, then press the **Enter** button. Your selection is entered and the second digit flashes.
3. Repeat Step 2 until you have created your new value. If the number has less than five characters, use leading or trailing zeros for the remaining spaces. When you have configured the fifth space, the display prompts you to place the decimal point.
4. Move the decimal point with the **Next** button until it is where you want it and press the **Enter** button.

NOTE

1. The decimal point may not be placed directly after the first digit. For example, you can not enter a value as 1.2300; you must enter it as 01.230.
2. The decimal position is identified by flashing except at the position after the fifth digit. At that position (representing a whole number), the decimal point is assumed.

5. The display advances to the next menu item.

Reranging

With Version 4 Firmware, reranging can be done in either Calibration mode (see “RERANGE:” on page 44) or Configuration mode (see “RERANGE:” on page 56).

With Version 5 Firmware, you can access the Rerange mode in the top level menu (see Figure 34). Entry to the Mode Select menu is made (from normal operating mode) by pressing the **Next** button. The display reads **RERANGE**. You can then adjust **M1 URV** and/or **M1 LRV** in the following two submenus.

NOTE

If **M1 MODE** is in a square root mode, regardless of engineering units selected, **RERANGE** is automatically done in the following “default” pressure units:
- **inH2O**, if **M2 MODE** is a type of square root.
- **M2 EGU** units, if **M2 MODE** is linear.

The bottom line of the display indicates the “default units” during **RERANGE**. Following **RERANGE**, the display automatically switches back to the configured engineering units.

M1 URV:

To edit the upper range value, press **Enter** at the prompt **M1 URV**. Use the procedure “Entering Numerical Values” on page 33 section to edit this parameter.

M1 LRV:

Similar to **M1URV** immediately above.

NOTE

M1 LRV is bypassed if **M1 MODE** is configured as square root since **M1 LRV** must be zero.

Viewing the Database

You can access the View Database mode by the multi-level menu system described above. Entry to the Mode Select menu is made (from normal operating mode) by pressing the **Next** button. The display reads **CALIB** (with Version 4 firmware) and **RERANGE** (with Version 5 firmware). Use the **Next** button to get to **VIEW DB**. Acknowledge your choice of this selection by pressing the **Enter** button. The display shows the first item in the database. You can step through the database display by

repeated use of the **Next** button. You can abort this procedure at any time by pressing the **Enter** button.

Viewing the Pressure Range

The values of M1LRV and M1 URV can be viewed in VIEW DB as described above.

Testing the Display

You can access the Test Display mode by the same multi-level menu system that was used to enter Reranging, Calibration, Configuration, and View Database mode. Entry to the Mode Select menu is made (from normal operating mode) by pressing the **Next** button. The display reads **CALIB** (with Version 4 firmware) and **RERANGE** (with Version 5 firmware). Use the **Next** button to get to **TST DSP**. Acknowledge your choice of this selection by pressing the **Enter** button. The display shows the first test segment pattern. You can step through the five patterns by repeated use of the **Next** button. You can abort the test at any time by pressing the **Enter** button. The five patterns are shown in Figure 35.

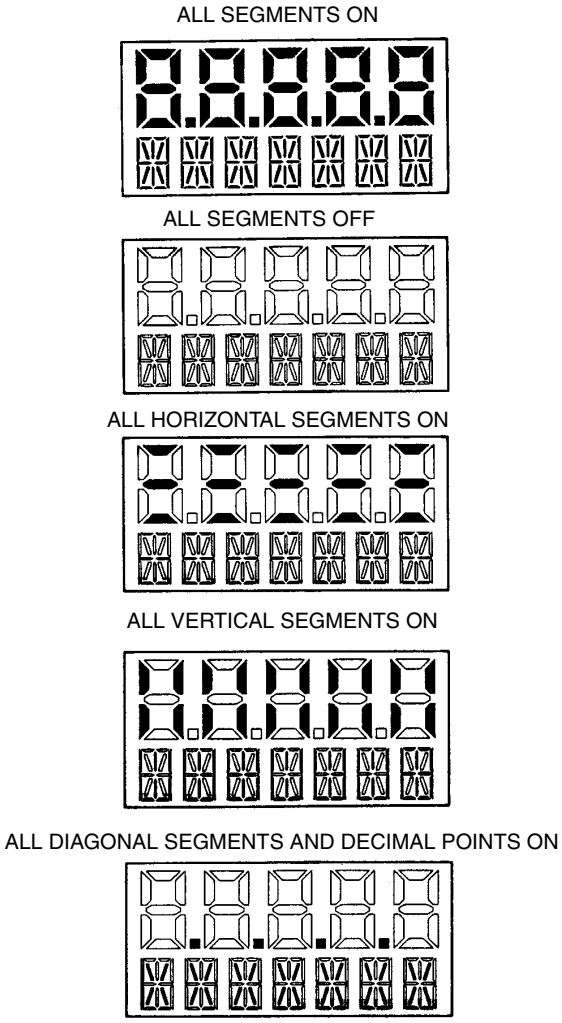

Figure 35. Display Test Segment Patterns

Error Messages

Table 4. Operation Error Messages

Parameter	Condition Tested	Error Message	Action
Normal Operation	Write Protection Enabled	WR PROT	Displays periodically to notify user that unit is in Write Protect.
	Any non-On-line Condition	OFFLINE	Notifies user of a non-On-line condition.
Startup	Database OK or corrupted	INITERR	User should perform SET GDB procedure. See “SET GDB:” on page 58.

4. Calibration

NOTE

1. For best results in applications where high accuracy is required, rezero the transmitter output once it has stabilized at the final operating temperature.

2. Zero shifts resulting from position effects and/or static pressure effects can be eliminated by rezeroing the transmitter output.

3. When checking the zero reading of a transmitter operating in the square root mode, return the output to the linear mode. This eliminates an apparent instability in the output signal. Return the transmitter output to the square root mode after the zero check is complete.

4. After calibrating transmitters operating with a 4 to 20 mA (or 1 to 5 V dc) output signal, check the underrange and overrange output values to ensure that they extend beyond 4 and 20 mA (or 1 and 5 V dc) respectively.

General Calibration Notes

1. Each transmitter is factory characterized over its full rated pressure range. One benefit of this process is that every transmitter can measure any applied differential pressure within its range limits regardless of the calibrated range. The applied differential pressure is measured and converted into an internal digital value of differential pressure. This digital value of differential pressure is always available whether the transmitter is calibrated or not. Calibration assures that the transmitter rated accuracy is achieved over the calibrated range.
2. The internal digital value of differential pressure can be displayed on the optional local display, transmitted digitally, and converted to a 4 to 20 mA analog output signal.
3. Each transmitter is factory calibrated to either a specified or a default calibrated range. This calibration optimizes the accuracy of the internal digital value of differential pressure over that range. If no range is specified, the default range is zero to the sensor upper range limit (URL).
4. The transmitter database has configurable values for both Lower Range Value (LRV) and upper range value (URV). These values are used for two functions.
   a. Defining the Calibrated Range When Using Local Pushbuttons for Calibration:
      - When either **CAL LRV** or **CAL URV** is initiated from the local pushbuttons, the transmitter expects that the differential pressure applied at the time the button is pressed is equal to the LRV or URV value respectively.
      - This function trims the internal digital value of differential pressure; that is, it performs a calibration based on the application of accurate differential pressures equal to the values entered for LRV and URV in the transmitter database.
      - This function also sets the 4 and 20 mA output points; that is, the 4 and 20 mA points correspond to the values of LRV and URV in the database.
      - The value of LRV can be larger than the value of URV.
   b. Reranging Without the Application of Pressure:
      - Since the transmitter continually determines an internal digital value of the measured differential pressure from the lower range limit (LRL) to the upper range limit (URL), the 4 and 20 mA output points can be assigned to any differential pressure values (within the span and range limits) without application of pressure.
      - The reranging function is accomplished by entering new database values for LRV and URV.

- Reranging does not affect the calibration of the transmitter; that is, it does not affect the optimization of the internal digital value of differential pressure over a specific calibrated range.
- If the reranged LRV and URV are not within the calibrated range, the measured values may not be as accurate as when they are within the calibrated range.

If the transmitter is in square root mode for flow rate measurement, the URV in the database is displayed as the flow rate URV when the view database (**VIEW DB**) function is used. However, the LRV and URV in pressure units can be displayed by selecting the reranging (**RERANGE**) function. LRV is always zero when the transmitter is configured for square root mode.

5. When the optional local display is used, the internal digital value of differential pressure is sent directly to the indicator.

- The display can show any measured differential pressure in selected units regardless of the calibrated range and the values of LRV and URV (within the limits of the transmitter and display).
- If the measured differential pressure is outside the range established by the LRV and URV values in the database, the display shows the measurement but also continually blinks to indicate that the measurement is out of range. The mA current signal is saturated at either the low or high overrange limit respectively but the display continually shows the pressure.

6. When configured for 4 to 20 mA output, the internal digital value of differential pressure is converted to an analog current signal.

- The transmitter sets the output at 4 mA for the LRV and 20 mA for the URV.
- There is an independent trim on the digital-to-analog conversion stage. This trim allows for slight adjustment of the 4 and 20 mA outputs. This compensates for any slight difference that exists between the transmitter mA output and an external reference device which is measuring the current.
- The mA trim does not affect the calibration or the reranging of the transmitter and does not affect the internal digital value of differential pressure or the transmission or display of measured pressure.
- The mA trim can be done with or without pressure applied to the transmitter.

7. Zeroing from the local display does not affect the span.

When the transmitter is zeroed to compensate for installed position effect, the transmitter can have either LRV differential pressure applied (**CAL LRV**) or zero differential pressure applied (**CAL AT0**). If using a zero-based range, either method produces the same result. However, if the range is not zero-based, it is advantageous to have both methods available.

For example, consider a differential pressure transmitter having a range of 50 to 100 psig. If it is not feasible to vent the transmitter to atmosphere for zeroing (or to bypass the high and low sides for zeroing), it can be zeroed while the LRV differential pressure of 50 psi is applied by using the **CAL LRV** function. On the other hand, if the transmitter has been installed but there is no pressure in the process line yet (or the high and low sides can be connected by a bypass valve), it can be zeroed while open to atmosphere (or bypassed) by using the **CAL AT0** function.

a. Zeroing with LRV Pressure Applied (**CAL LRV**):

- Before using this zeroing function, apply a differential pressure to the transmitter equal to the value of LRV stored in the transmitter database.
- When you zero the transmitter, the internal digital value of differential pressure is trimmed to be equal to the value of LRV stored in the database and the mA output set to 4 mA.

- If zeroing is done when the applied differential pressure is different from the LRV value in the database, the internal digital value of differential pressure is biased by the difference in the values but the output is still set at 4 mA.
- The **CAL LRV** and **CAL URV** function should be used when calibrating a transmitter for a specific range with known input differential pressures applied for the LRV and URV.

b. Zeroing with Zero Pressure Applied (**CAL AT0**):

- Make sure that the applied differential pressure is at zero. This means venting the transmitter to atmosphere or opening a bypass valve to connect high and low sides.

- When you zero the transmitter, the internal digital value of the differential pressure is trimmed to be equal to zero and the mA output set to an appropriate value such that the mA output is a nominal 4 mA when the LRV pressure is applied later.

Calibration Setup

The following sections show setups for field or bench calibration. Use test equipment that is at least three times as accurate as the desired accuracy of the transmitter.

NOTE

It is not necessary to set up calibration equipment to rerange the transmitter to a different range. The transmitter can be accurately reranged by simply changing the lower range value and the upper range value, which are stored in the transmitter database.

Setup of Electronic Equipment

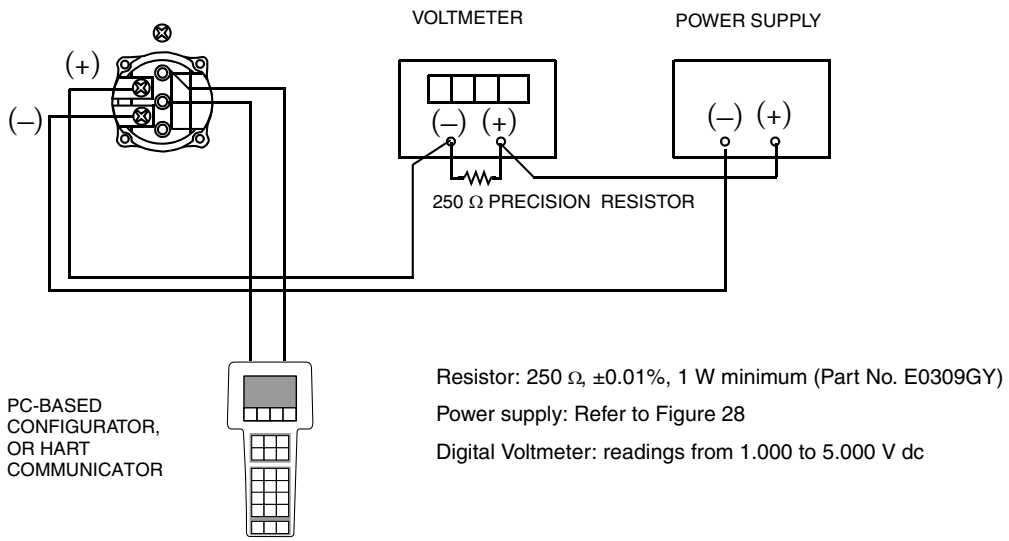

Figure 36. 4 to 20 mA Output Calibration Setup of Electronic Equipment

Field Calibration Setup

Field calibration is performed without disconnecting the process piping. In order to do this, you must have a bypass and shutoff valves between the process and the transmitter and one of the following:

- Access to the process connections on the nonprocess side of the transmitter
- The optional vent screw in the side of the process covers.

If the transmitter is to be removed from the process for calibration, refer to the "Bench Calibration" procedure.

For field calibration, an adjustable air supply and a pressure measuring device are required. For example, a dead weight tester or an adjustable clean air supply and pressure gauge can be used. The pressure source can be connected to the transmitter process connection with pipe fittings or it can be connected to the vent screw assembly using a calibration screw. The calibration screw has a Polyflo fitting and can be used for pressures up to 700 kPa (100 psi). It is available from Invensys Foxboro as Part Number F0101ES.

To set up the equipment, refer to Figure 37 and use the following procedure.

1. If the transmitter is in operation, follow the “Taking a Differential Pressure Transmitter Out of Operation” on page 30.

CAUTION

With liquid service, drain both sides of transmitter to avoid calibration errors.

2. If a calibration screw **is** being used, remove the vent screw and replace it with the calibration screw. Connect the pressure source to the calibration screw using 6 x 1 mm or 0.250 inch tubing.
   If a calibration screw is **not** being used, remove the entire vent screw assembly or drain plug (as applicable) from the high pressure side of the transmitter. Connect calibration tubing using a suitable thread sealant.
3. Close the bypass valve opened in Step 1.
4. Complete the setup shown in Figure 37.

NOTE

For vacuum applications, connect the calibrating pressure source to the low pressure side of the transmitter.

5. If calibrating the output signal, also connect equipment as shown in Figure 36.

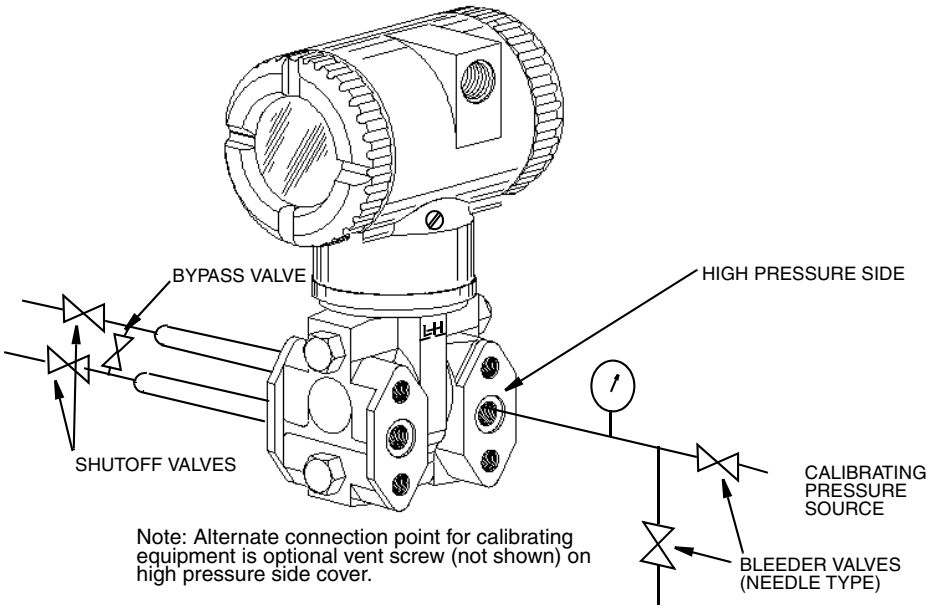

Figure 37. Field Calibration Setup

Bench Calibration Setup

The bench calibration setup requires disconnecting the process piping. For calibration setup without disconnecting the process piping, refer to the "Field Calibration" procedure.

The bench calibration setup is shown in Figure 38. Connect the input piping to the high pressure side of the transmitter as shown. Vent the low pressure side of the transmitter.

NOTE

For vacuum applications, connect the calibrating pressure source to the low pressure side of the transmitter.

If calibrating the output signal, also connect equipment as shown in Figure 36.

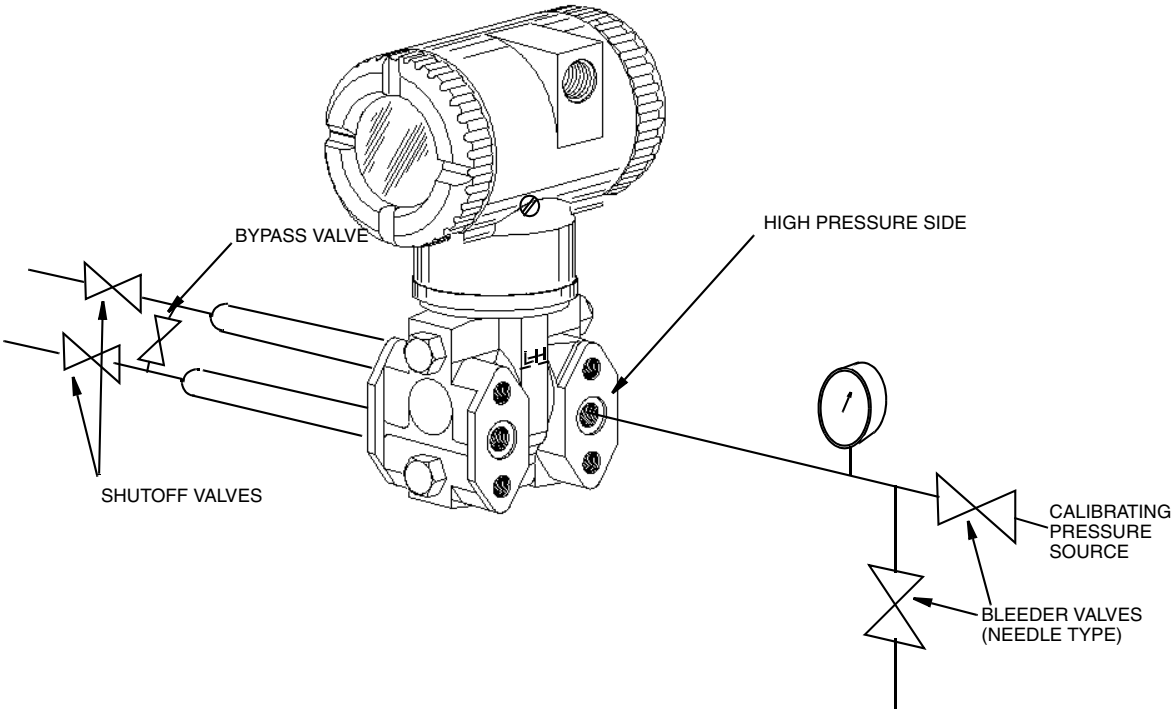

Figure 38. Bench Calibration Setup

Calibration Using a PC20

To calibrate the transmitter using a PC20 Configurator, follow the procedure in MI 020-495.

Calibration Using a PC50

To calibrate the transmitter using a PC50 Configurator, follow the procedure in MI 020-501 and MI 020-505.

Calibration Using a HART Communicator

To calibrate the transmitter using a HART Communicator, follow the procedure in MI 020-366.

Calibration Using the Optional Local Display

To access the Calibration mode (from normal operating mode), press the **Next** button. The display reads **CALIB**, the first item on the menu. Acknowledge your choice of this selection by pressing the **Enter** button. The display shows the first item in the Calibration menu.

NOTE

1. During calibration, a single change could affect several parameters. For this reason, if an entry is entered in error, re-examine the entire database or use the **Cancel** feature to restore the transmitter to its starting configuration and begin again.

2. During adjustment of 4 and 20 mA in the Calibration menu, the milliampere output does not reflect live measurement values.

Table 5. Calibration Menu

Item	Description
CAL AT0	Calibrate at zero pressure.
CAL LRV	Calibrate with pressure at 0% of transmitter range (LRV).
CAL URV	Calibrate with pressure at 100% of transmitter range (URV).
ADJ 4mA	Adjust nominal 4 mA output.
ADJ20mA	Adjust nominal 20 mA output.
RERANGE[(a)]	Adjust primary upper and lower range values (Version 4 firmware only).
CALDATE	Enter the calibration date.
ADJ 4mA causes the following four submenus.	
A 4mA∆∆	Increase 4 mA output by large step.
A 4mA∇∇	Decrease 4 mA output by large step.
A 4mA∆	Increase 4 mA output by small step.
A 4mA∇	Decrease 4 mA output by small step.
ADJ 20mA causes the following four submenus.	
A 20mA∆∆	Increase 20 mA output by large step.
A 20mA∇∇	Decrease 20 mA output by large step.
A 20mA∆	Increase 20 mA output by small step.
A 20mA∇	Decrease 20 mA output by small step.
RERANGE causes the following two submenus.	
M1 URV	Adjust upper range value.
M1 LRV	Adjust lower range value.

(a) Rerange with Version 5 firmware is done in the top level menu.

NOTE

It is not necessary to use the **ADJ4mA** or **ADJ20mA** menu selections (commonly known as mA Trim) unless there is a plant requirement to make the 4 and 20 mA output values exactly match readings on certain plant calibration equipment and the calibration operations done result in a small but unacceptable difference between the transmitter mA output and the test equipment mA readout values.

Proceed to calibrate your transmitter by using the **Next** key to select your item and the **Enter** key to specify your selection per Figures 39 and 40. At any point in the calibration you can **Cancel**, restore your prior calibration and return to the on-line mode or **Save** your new calibration.

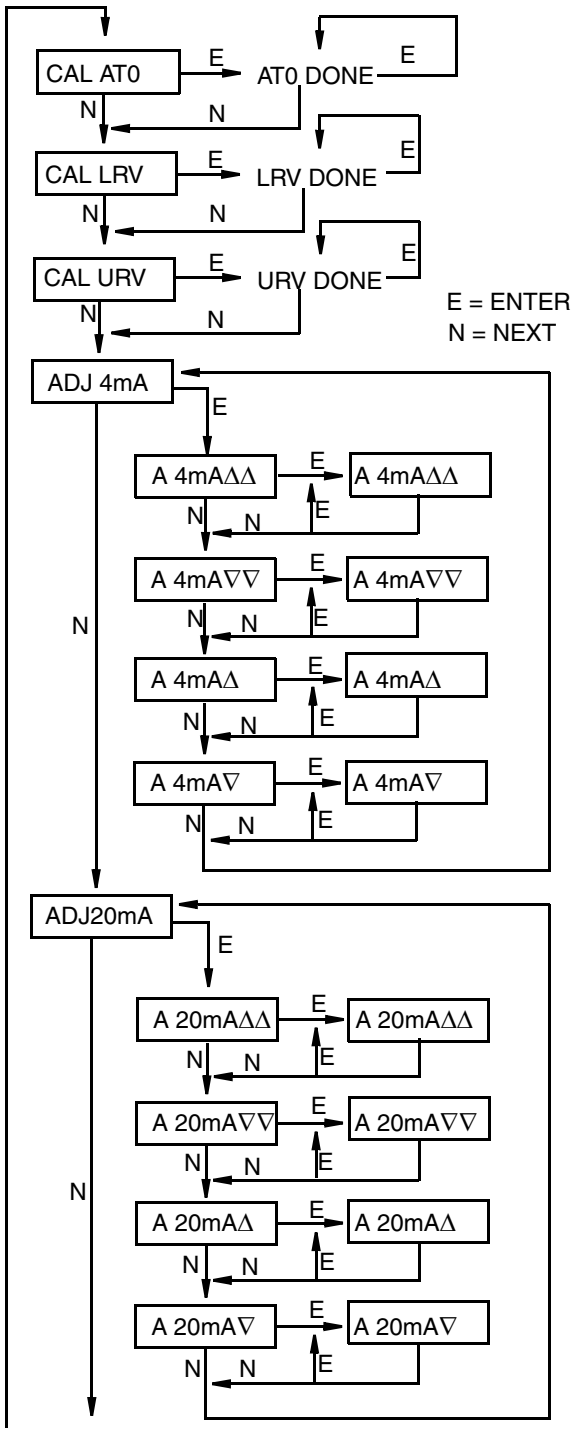

(continued on next figure)

CAL AT0: To set or reset the zero point at zero pressure, apply zero differential pressure to the transmitter and, at display of **CAL AT0**, press **Enter**. This can be done whether LRV is zero or not. Completion is indicated by the display **AT0 Done**.

CAL LRV: To set or reset 0% of range input, apply differential pressure to the transmitter equal to the lower range value (LRV) in the transmitter database and, at display of **CAL LRV**, press **Enter**. Completion is indicated by the display **LRV Done**.

CAL URV: To set or reset 100% of range input, apply differential pressure to the transmitter equal to the upper range value (URV) in the transmitter database and, at display of **CAL URV**, press **Enter**. Completion is indicated by the display **URV Done**.

ADJ4mA: If you configured your transmitter operating mode as 4 to 20 mA, you can adjust the 4 mA output by going to **ADJ4mA** using the **Next** button and press **Enter**. This menu item is bypassed if you configured your transmitter for multidrop mode (poll address other than zero).

To increase the 4 mA output by a large (0.025 mA) step, press **Enter** at the display **A 4mA**ΔΔ. To decrease it by a large step, go to the display **A 4mA**∇∇ by pressing the **Next** button and then **Enter**. To increase it by a small (0.001 mA) step, go to the display **A 4mA**Δ with the **Next** button and then press **Enter**. To decrease it by a small step, go to the display **A 4mA**∇ with the **Next** button and then press **Enter**.

ADJ20mA: Similar to **ADJ4mA**.

Figure 39. Calibration Structure Diagram

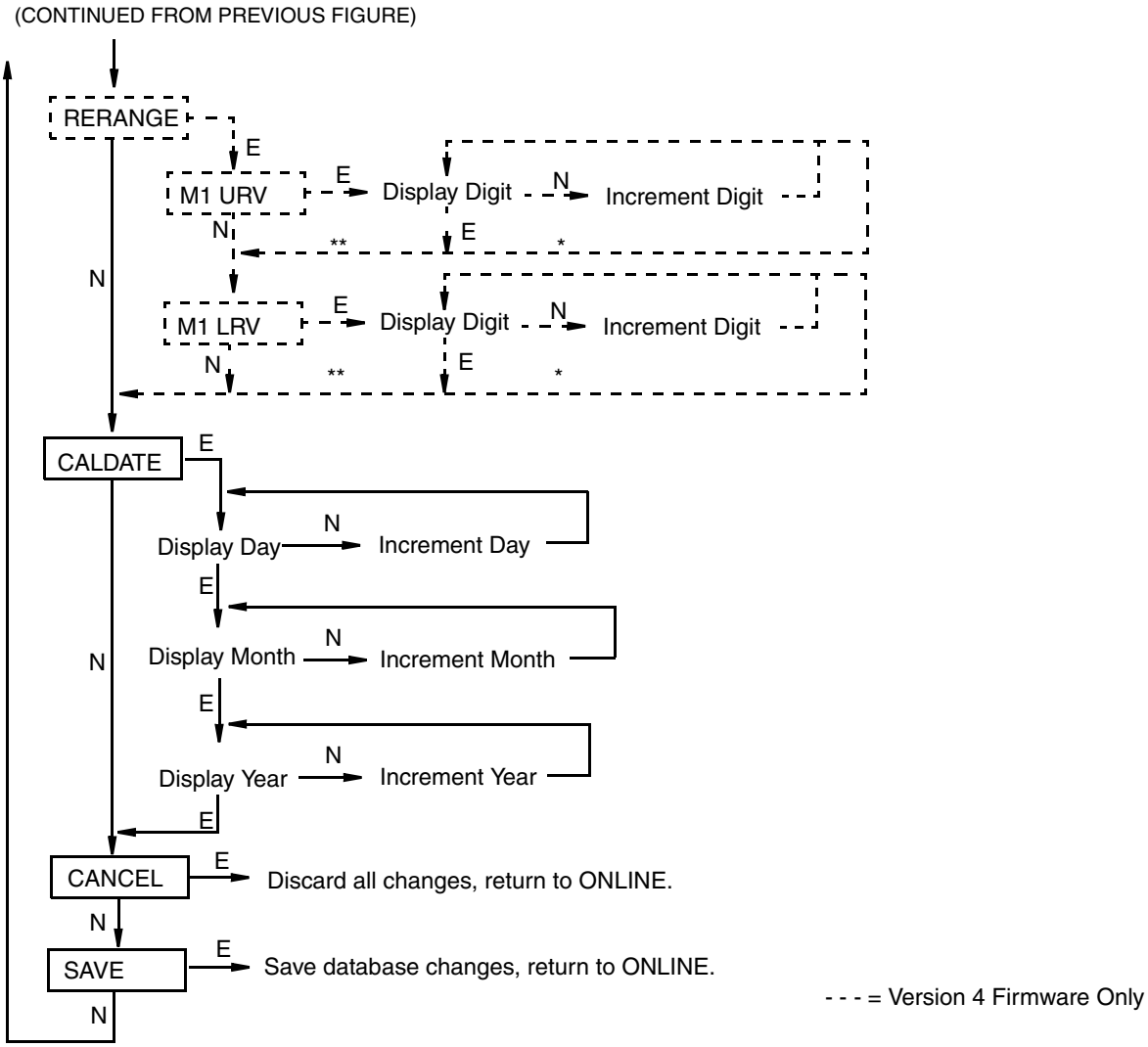

*If character is not the last position on the display line, advances to next character.
**If character is the last position on the display line, advances to next menu item.

NOTE: Commentary about this diagram immediately follows.

Figure 40. Calibration Structure Diagram (Continued)

Commentary on Figure 40

RERANGE:

With Version 5 Firmware: To adjust 100% and 0% range limits, go to **RERANGE** in the top level menu (see “Reranging” on page 33). You can then adjust **M1 URV** and/or **M1 LRV**.

With Version 4 Firmware: To adjust 100% and 0% range values, go to **Rerange** with the **Next** button and press **Enter**. You can then adjust **M1 URV** and/or **M1 LRV** in the following two submenus.

NOTE

If M1 is in square root mode, regardless of engineering units selected, **RERANGE** must be done in “default” pressure units. The “default” pressure units are:

- In **inH2O**, if M2 is a type of square root or **OFF**.
- In **M2 EGU** units, if M2 is linear.

The bottom line of the display indicates the “default" units during **RERANGE**. Following **RERANGE**, the display automatically switches back to the configured engineering units.

M1 URV:

To edit the upper range value, press **Enter** at the prompt **M1 URV**.

M1 LRV:

Similar to **M1URV** immediately above.

NOTE

M1 LRV is bypassed if **M1 MODE** is configured as square root since **M1 LRV** must be zero.

CALDATE:

This is not a required entry but can be used for recordkeeping or plant maintenance purposes. To edit the calibration date, go to **CALDATE** with the **Next** button and press **Enter**. You then can change the day, month, and year. The display shows the last date with the day flashing. Use the **Next** button to step through the menu of digits to select the desired day, then press **Enter**. Repeat this process for the month and year.

Zero Adjustment Using External Zero Button

An optional external zero adjustment mechanism in the electronics housing allows calibration at zero differential pressure (the **CAL AT0** function) or at the lower range value differential pressure (the **CAL LRV** function) without removing the electronics compartment cover. The mechanism is magnetically activated through the housing wall to prevent moisture from entering the enclosure.

NOTE

Do **not** use CAL AT0 if pressure seals are used that are at different elevations from the transmitter.

To use this feature:

1. Unlatch the external zero button by turning it 90° in a counterclockwise direction so that the screwdriver slot lines up with the two holes in the face of the adjacent part. Do **not** push the button in with the screwdriver while doing this.
2. To set or reset the zero point at zero differential pressure, apply zero differential pressure to the transmitter or use a bypass valve to equalize pressure on both sides of the transmitter. Press the external zero button until the display reads **CAL AT0**. Release the button. The display reads **CAL WAIT** and then **RESET** (calibration is complete).

   To set or reset the 0% of range input, apply the lower range value (LRV) differential pressure to the transmitter and press and hold the external zero button until the display reads **CAL LRV** (it reads **CAL AT0** first). Release the button. The display reads **CAL WAIT** and then **RESET** (calibration is complete).

NOTE

If the optional display is not present, the same functions can be accomplished by depending on the length of time the external zero button is depressed. Press and hold the button for 1 to 3 seconds for **CAL AT0** or for 5 or more seconds for **CAL LRV**. Therefore, if your LRV is zero, just depress the button for a few seconds. However, if your LRV is not zero, use **caution** when using the external zero button without the optional display because you must rely strictly on the length of time the button is depressed to differentiate between **CAL AT0** and **CAL LRV**.

Other possible messages are:
DISABLD if **EX ZERO** is configured **EXZ DIS**
IGNORED if the transmitter is not in the on-line mode.
WP ENAB if write protection jumper is in write protect position.

If additional rezeroing is required after Steps 1 and 2 have been accomplished, repeat Step 2.

3. Relatch the external zero button by turning it 90° in a clockwise direction to prevent accidental pressing of the button. Do **not** push the button in with the screwdriver while doing this.

Error Messages

Table 6. Calibration Error Messages

Parameter	Condition Tested	Error Message	User Action
Password Protection	Password	BAD PWD	Bad password entered, use another.
Write Protection	Write protection enabled	REJECT	Displays when user attempts an action that is write protected.
ZERO	Internal offset too large	BADZERO	Check applied pressure, configured **M1 LRV** and configured **M1 EOFF**.
SPAN	Slope too large or too small	BADSPAN	Check applied pressure, configured **M1 LRV** and configured **M1 EFAC**.
M1 URV	M1URV > max pressure in EGU	URV>FMX	Entered pressure is greater than maximum rated pressure of transmitter. Check entry. Verify EGUs.
	M1URV < min pressure in EGU	URV<FMN	Entered pressure is less than minimum rated pressure of transmitter. Check entry. Verify EGUs.
	M1 URV = M1 LRV	LRV=URV	Cannot set span to 0. Check entry. Check **M1 LRV**.
	M1 turndown exceeds limit	BADTDWN	Check entry. Check **M1 LRV**.
	URV < 0 with M1 or M2 SqRt	URV<LRV	Square root mode with nonzero LRV is not valid. Change LRV to 0.
M1 LRV	M1LRV > max pressure in EGU	LRV>FMX	Entered pressure is greater than maximum rated pressure of transmitter. Check entry. Verify EGUs.
	M1LRV < min pressure in EGU	LRV<FMN	Entered pressure is less than minimum rated pressure of transmitter. Check entry. Verify EGUs.
	M1 URV = M1 LRV	LRV=URV	Cannot set span to 0. check entry. Check **M1 URV**.
	M1 turndown exceeds limit	BADTDWN	Check entry. Check **M1 URV**.

5. Configuration

Configurable Parameters

Table 7 lists all the configurable parameters and the factory default for the IDP10-T Transmitters. The factory default values have been customized if the transmitter was ordered with optional feature -C2. The table also shows which parameters are configurable with the integral vs. remote configurators.

Table 7. IDP10-T Configurable Parameters

Parameter	Capability	Factory Default	Configurable with		Application Requirement
			Integ. Indic.	Remote Config.	
Descriptors					
Tag Number	8 characters max	Tag Number	No	Yes	
Descriptor	16 characters max	Tag Name	No	Yes	
Message	32 characters max	Inst Location	No	Yes	
Input					
Calibrated Range	LRV to URV in units listed in (a) below	See (b) below when not specified per S.O.	Yes	Yes	
Output					
Measurement #1 Output (PV)	4 to 20 mA or Fixed Current. Specify Poll Address (1-15) for Fixed Current.	4 to 20 mA	Yes	Yes	
Measurement #1 Mode	Linear or type of square root in (d) below	Linear	Yes	Yes	
Measurement #1 EGUs	If linear, select from units listed in (a) below; If Sq.Rt., select from units listed in (c) below	Units of Calibrated Range	Yes	Yes	
Measurement #2 Mode (SV)	Linear or type of square root in (d) below	Linear	Yes	Yes	
Measurement #2 EGUs	If linear, select from units listed in (a) below; If Sq.Rt., select from units listed in (c) below	Units of Calibrated Range	Yes	Yes	
Temp. Sensor Fail Strategy	Normal oper. or failsafe	Fail-safe	Yes		
Fail-safe	High or Low	High	Yes	Yes	
External Zero	Enabled or Disabled	Enabled	Yes	Yes	
Damping	0 to 32 seconds.	None	Yes	Yes	
Poll Address	0 - 15	0	Yes	Yes	
LCD Indicator (e)	Meas #1 EGU or % Lin	Meas #1 EGU	Yes	No	

(a) psi, inHg, ftH_2O, inH_2O, atm, bar, mbar, MPa, kPa, Pa, kg/cm^2, g/cm^2, mmHg, torr, mmH_2O.

(b) Span Code A: 0 to 30 inH_2O; Span Code B: 0 to 200 inH_2O; Span Code C: 0 to 30 psi; Span Code D: 0 to 300 psi; Span Code E: 0 to 3000 psi.

(c) gal/s, gal/m, gal/h, gal/d, Mgal/d, ft^3/s, ft^3/m, ft^3/h, ft^3/d, Igal/s, Igal/m, Igal/h, Igal/d, l/s, l/m, l/h, Ml/d, m^3/s, m^3/m, m^3/h, m^3/d, bbl/s, bbl/m, bbl/h, bbl/d, %flow.

(d) Square root with cutoff below 1% of calibrated pressure range or with linear below 4% of calibrated pressure range.

(e) Measurement #2 can be displayed at any time by pressing the **Enter** button regardless of the local display configuration. This reverts to Measurement #1 or % Lin (as configured) when power is cycled off and on.

Configuration Using a PC20

To configure the transmitter using a PC20 Configurator, follow the procedure in MI 020-495.

Configuration Using a PC50

To configure the transmitter using a PC50 Configurator, follow the procedure in MI 020-501 and MI 020-505.

Configuration Using a HART Communicator

To configure the transmitter using a HART Communicator, follow the procedure in MI 020-366.

Configuration Using the Optional Local Display

You can access the Configuration mode by the same multi-level menu system that was used to enter Calibration mode. Entry to the Mode Select menu is made (from normal operating mode) by pressing the **Next** button. The display reads **CALIB**, the first item on the menu. Press the **Next** button again to get to the second item on the menu, **CONFIG**. Acknowledge your choice of this selection by pressing the **Enter** button. The display shows the first item in the Configuration menu. You can then configure items shown in Table 8. The standard factory default configuration is also given in this table.

The standard factory default configuration is not used if custom configuration option -C2 has been specified. Option -C2 is a full factory configuration of all parameters to the user's specifications.

NOTE

1. You can configure most parameters using the local display. However, for more complete configuration capability, use a HART Communicator or PC-Based configurator.
2. During configuration, a single change can affect several parameters. For this reason, if an entry is entered in error, re-examine the entire database or use the **Cancel** feature to restore the transmitter to its starting configuration and begin again.

Table 8. Configuration Menu

Item	Description	Initial Factory Configuration
POLLADR	Poll Address: 0 - 15	0
EX ZERO[a]	External Zero: enable or disable	Enable
S2 FAIL	Temperature Sensor Failure Strategy: S2FATAL or S2NOFTL	S2FATAL
OUT DIR	4 to 20 mA Output: forward or reverse	Forward
OUTFAIL	4 to 20 mA Output: fail mode output - low or high	High
OFFL MA	4 to 20 mA Output in offline mode - last or user set	USER MA
DAMPING	Damping: none, 1/4, 1/2, 1, 2, 4, 8, 16, or 32 seconds	None
M1 MODE	Output: linear or type of square root[b]	Linear
M1DISP	Local Indicator Display in linear mode: in percent or engineering units	M1EGU
M1 EGU	User-Defined Engineering Units	inH_2O or psi
RERANGE[c]	Adjustment of 100% and 0% range values	- - -
M1 URV	Primary Upper Range Value	URL
M1 LRV	Primary Lower Range Value	0
M2 MODE	Output: linear or type of square root	Linear
M2 EGU	User-Defined Engineering Units	Same as M1 EGU
DISPLAY[d]	Display M1, M2, or Toggle between M1 and M2	M1

Table 8. Configuration Menu (Continued)

Item	Description	Initial Factory Configuration
CALDATE	Calibration Date	- - -
ENA PWD	Enable password; no password, configuration only, or configuration and calibration	NO PWD
CFG PWD	User set configuration password (six characters)	- - -
CAL PWD	User set calibration password (six characters)	- - -
SET GDB	Rewrite all calibration and configuration values with default values	- - -

(a) Applies only if transmitter contains External Zero option.

(b) Square root is not applicable to absolute pressure, gauge pressure, and flange level measurement.

(c) Version 4 firmware only. Rerange with Version 5 firmware is done in the top level menu.

(d) Version 5 firmware only.

Proceed to configure your transmitter by using the **Next** button to select your item and the **Enter** button to specify your selection per the following three figures. At any point in the configuration you can **Cancel** your changes and return to the on-line mode, or **Save** your changes.

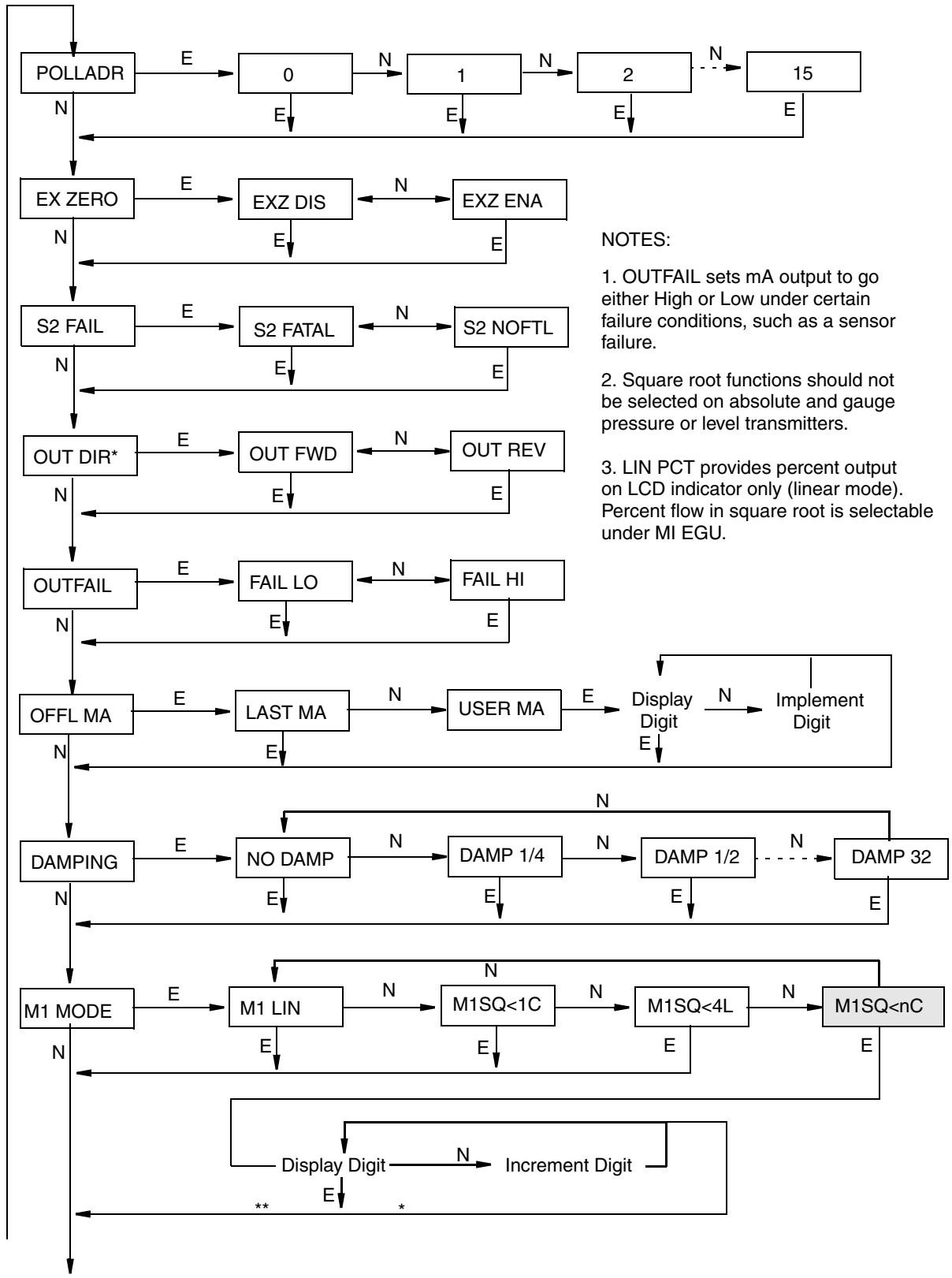

NOTES:

1. OUTFAIL sets mA output to go either High or Low under certain failure conditions, such as a sensor failure.

2. Square root functions should not be selected on absolute and gauge pressure or level transmitters.

3. LIN PCT provides percent output on LCD indicator only (linear mode). Percent flow in square root is selectable under MI EGU.

(continued on next figure)

= Version 5 firmware only

Figure 41. Configuration Structure Diagram

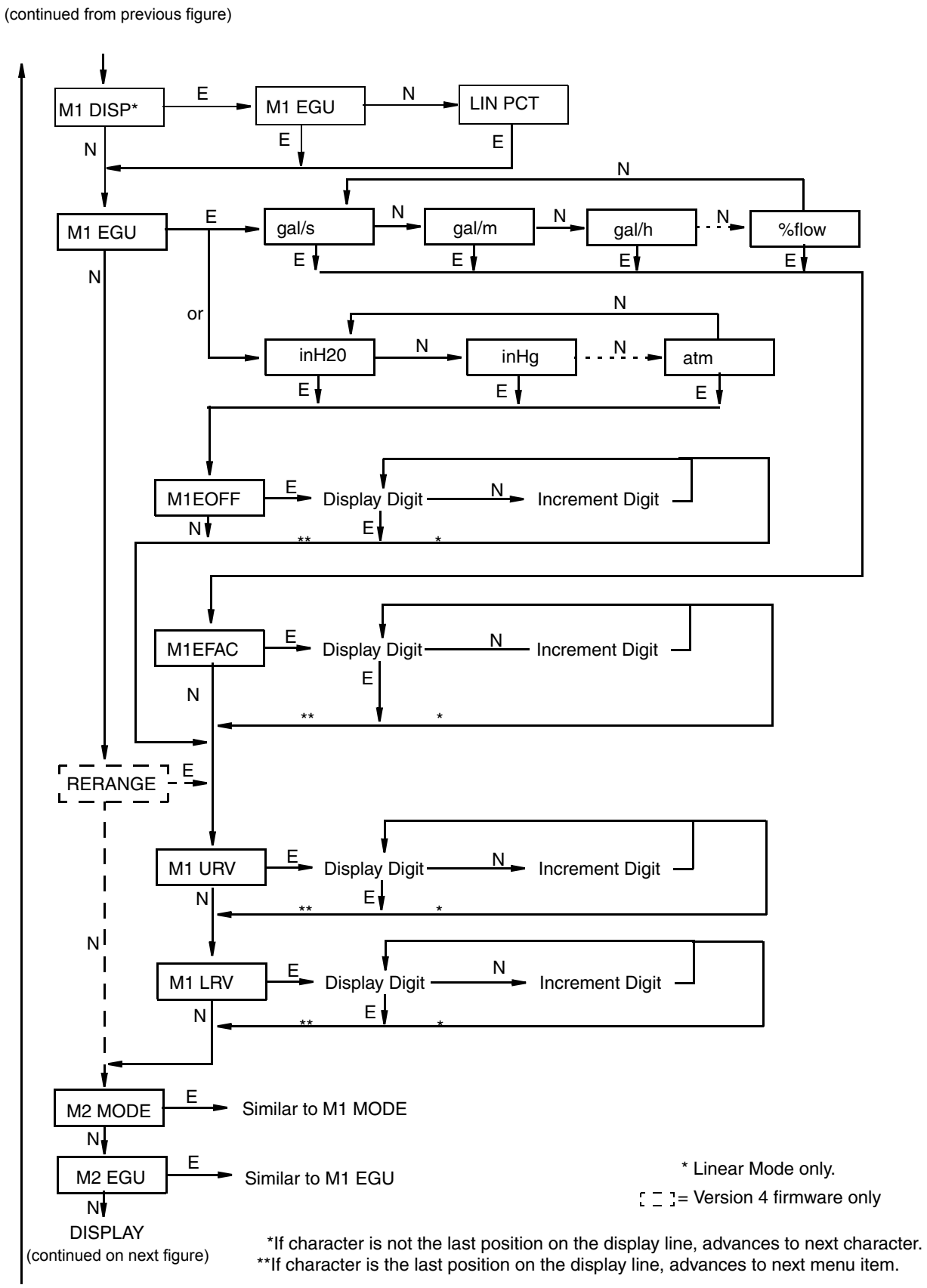

Figure 42. Configuration Structure Diagram (Continued)

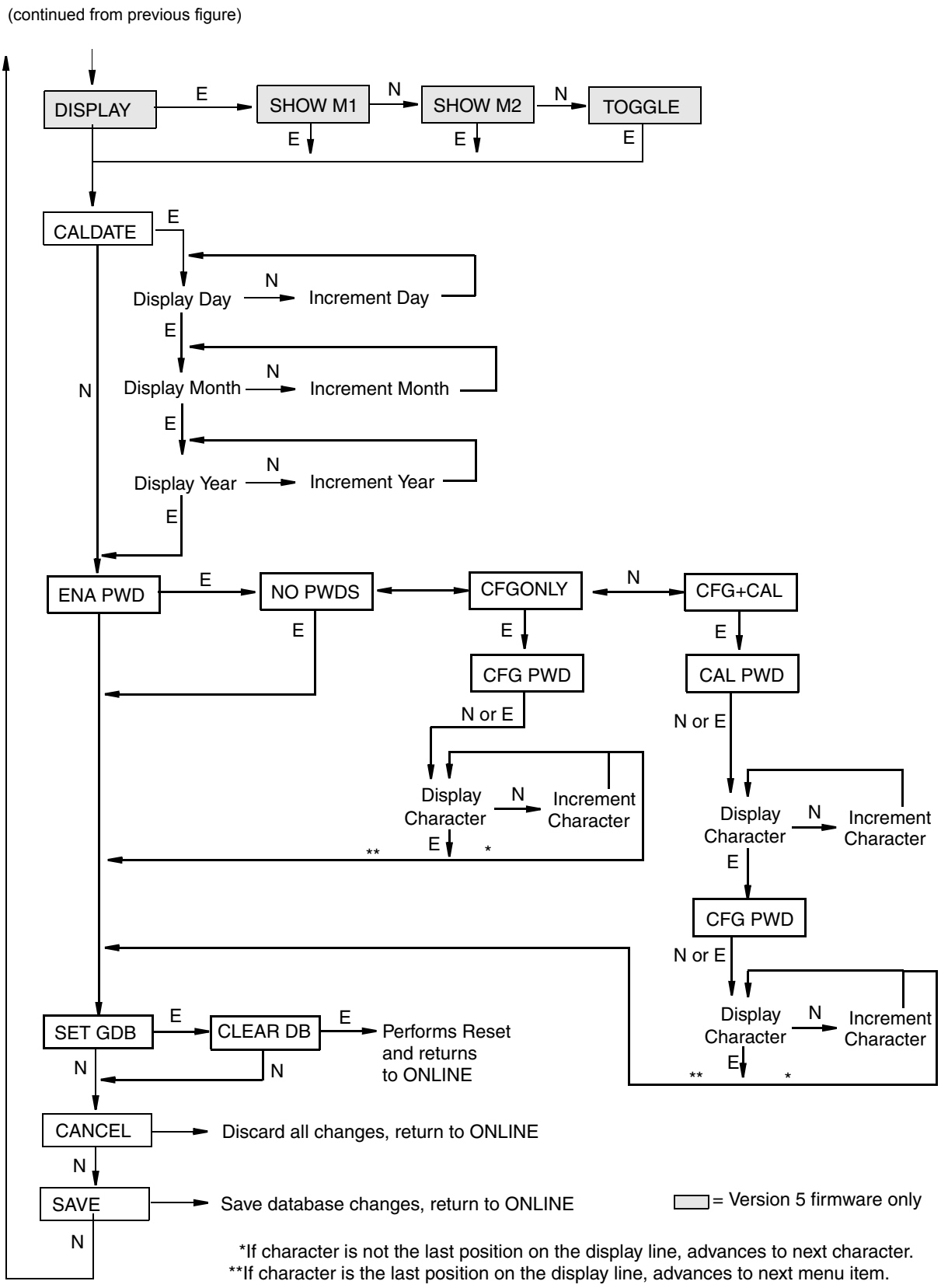

Figure 43. Configuration Structure Diagram (Continued)

Commentary on Configuration Structure Diagram

In general, use the **Next** button to select your item and the **Enter** button to specify your selection.

POLLADR:

To configure the transmitter poll address, press **Enter**. Use the **Next** button to select an address of **0** through **15**, then press **Enter**. An address of 1 through 15 is used for multidrop mode with a fixed mA output.

EX ZERO:

The External Zero feature allows the optional external zero pushbutton to be disabled for additional security. To configure this feature, go to **EX ZERO** with the **Next** button and press **Enter**. Use the **Next** button to select **EXZ DIS** or **EXZ ENA** and press **Enter**.

S2 FAIL:

The temperature sensor compensates for changes in temperature in the transmitter electronics. Failure of this sensor can cause a 4 to 20 mA accuracy change of up to 0.25%. The **S2 FAIL** feature allows you to specify action (or no action) if such a failure occurs. To configure this feature, go to **S2 FAIL** with the **Next** button and press **Enter**. Use the **Next** button to select **S2 FATAL** (to have the output go to that configured in **OUTFAIL**) or **S2 NOFTL** (to continue operation with a temperature sensor failure). This parameter is bypassed if **POLLADR** is configured any number from **1** through **15**.

OUT DIR:

To configure the Output Direction, go to **OUT DIR** with the **Next** button and press **Enter**. Use the **Next** button to select **OUT FWD** (4 - 20 mA) or **OUT REV** (20 - 4 mA) and press **Enter**. This parameter is bypassed if **POLLADR** is configured any number from **1** through **15** or if **M1 MODE** or **M2 MODE** is configured as square root.

OUTFAIL:

The Outfail feature provides high or low output with certain malfunctions. To configure the fail mode output, go to **OUTFAIL** with the **Next** button and press **Enter**. Use the **Next** button to select **FAIL LO** or **FAIL HI** and press **Enter**. This parameter is bypassed if **POLLADR** is configured any number from **1** through **15**.

OFFL MA:

The Off-line mA feature enables you to set the output to a specified value or to the last value if the transmitter goes off-line. To configure the off-line output, go to **OFFL MA** with the **Next** button and press **Enter**. Use the **Next** button to select **LAST MA** or **USER MA** and press **Enter**. If you selected **USER MA**, press **Enter** again at the display of digits. Then use the **Next** button to step through the library of digits to select the desired first digit, then press **Enter**. Your selection is entered and the second character flashes. Repeat this procedure until you have entered the last digit. Then use the **Next** button to move the decimal point to its desired location and press **Enter**. The display advances to the next menu item.

DAMPING:

To configure additional damping, go to **DAMPING** with the **Next** button and press **Enter**. Use the **NEXT** button to select **NO DAMP**, **DAMP 1/4**, **DAMP 1/2**, **DAMP 1**, **DAMP 2**, **DAMP 4**, **DAMP 8**, **DAMP 16**, or **DAMP 32** and press **Enter**.

M1 MODE:

To configure the mode of the primary output (PV), go to **M1 MODE** with the **Next** button and press **Enter**. Use the **Next** button to select **M1 LIN** (linear), **M1SQ<1C** (square root with cutoff below 1% dp (M1 URV in linear units of dp), **M1SQ<4L** (square root with linear below 4% of dp (M1 URV in linear units of dp), or (with Version 5 firmware) **M1SQ<nC** (square root with user configured cutoff specified between 0 and 20% of the flow upper range value, M1 EFAC) and press **Enter**. You cannot configure this parameter as square root if **OUT DIR** was configured as **OUT REV** or if M1LRV is not zero.

NOTE

Cutoff in **M1SQ<1C** and **M1SQ<4L** is in percent of differential pressure but cutoff in **M1SQ<nC** is in percent of flow rate.

M1 DISP:

To configure the optional local indicator for percent in linear mode, go to **M1 DISP** with the **Next** button and press **Enter**. Use the **Next** button to select **M1 EGU** or **LIN PCT** and press **Enter**. **LIN PCT** only provides percent readings on the local display. **M1EGU** is used for remote communication of Measurement #1, even if **LIN PCT** is selected.

M1 EGU:

To configure pressure or flow engineering units for your display and transmission, go to **M1 EGU** with the **Next** button and press **Enter**. If **M1 MODE** is configured as **M1 LIN**, you are asked to specify one of the following pressure labels: **psi**, **inHg**, **ftH$_2$O**, **inH$_2$O**, **atm**, **bar**, **mbar**, **MPa**, **Pa**, **kPa**, **kg/cm^2**, **g/cm^2**, **mmHg**, **torr**, **mmH$_2$O, mH$_2$O**. or **hW60** (inH2O at 60°F). Your transmitter then automatically adjusts **M1EFAC** (engineering factor), **M1 URV** (upper range value), and **M1 LRV** (lower range value). **M1EOFF** is set to zero.

If **M1 MODE** is configured as **M1 SQ<1C, M1SQ<4L, or M1 SQ<nC**, you are asked to specify one of the following flow labels: **%flow, gal/s**, **gal/m**, **gal/h**, **gal/d**, **Mgal/d**, **ft^3/s**, **ft^3/m**, **ft^3/h**, **ft^3/d**, **lgal/s**, **lgal/m**, **lgal/h**, **lgal/d**, **l/s**, **l/m**, **l/h**, **Ml/d**, **m^3/s**, **m^3/m**, **m^3/h**, **m^3/d**, **bbl/s**, **bbl/m**, **bbl/h**, **bbl/d**. Also **T/h**, **lb/h**, **kg/h**, **Nm^3/h** (normal m^3/h), **Sm^3/h** (standard m^3/h), **Am^3/h** (actual m^3/h), or **MMSCFD** (million scfd) with Version 5 firmware. Check the **M1EFAC** (engineering factor) and, if necessary, adjust it as follows:

M1EFAC:

This parameter is used to input the numerical relationship between the measured span in pressure units and the displayed (and transmitted) span in flow units. It is the displayed URV in flow units (which is also the span in flow units since flow ranges must be zero-based).

Example:

For a 200 inH$_2$O transmitter with a measured range of 0 to 100 inH$_2$O and displayed range of 0 to 500 gal/m, **M1EFAC** = 500.

To edit the span in your configured flow units, press **Enter** at the prompt **M1EFAC**. Use the procedure “Entering Numerical Values” on page 33 to edit this parameter.

RERANGE:

With Version 5 Firmware: To adjust 100% and 0% range values, go to **RERANGE** in the top level menu (see “Reranging” on page 33).. You can then adjust **M1 URV** and/or **M1 LRV**.

With Version 4 Firmware: To adjust 100% and 0% range limits, go to **RERANGE** with the **Next** button and press **Enter**. You can then adjust **M1 URV** and/or **M1 LRV** in the following two submenus.

NOTE

If **M1 MODE** is in a square root mode, regardless of engineering units selected, **RERANGE** is automatically done in the following “default” pressure units:

- **inH2O**, if **M2 MODE** is a type of square root.
- **M2 EGU** units, if **M2 MODE** is linear.

The bottom line of the display indicates the “default units” during **RERANGE**. Following **RERANGE**, the display automatically switches back to the configured engineering units.

M1 URV:

To edit the upper range value, press **Enter** at the prompt **M1 URV**. Use the procedure “Entering Numerical Values” on page 33 section to edit this parameter.

M1 LRV:

Similar to **M1URV** immediately above.

NOTE

M1 LRV is bypassed if **M1 MODE** is configured as square root since **M1 LRV** must be zero.

M2 MODE:

M2 is a secondary measurement (SV) that is read by the HART Communicator and can be displayed on the optional display. You might use this feature to display M1 in flow units and M2 in comparable pressure units. To configure this parameter, go to **M2 MODE** with the **Next** button and press **Enter**. Use the **Next** button to select **M2 LIN** (linear), **M2SQ<1C** (square root with cutoff below 1% dp (M2 URV in linear units of dp), **M2SQ<4L** (square root with linear below 4% of dp (M2 URV in linear units of dp), or (with Version 5 firmware) **M2SQ<nC** (square root with cutoff specified between 0 and 20% of the flow upper range value, M2 EFAC) and press **Enter**.

M2 EGU:

Similar to **M1 EGU**.

DISPLAY:

With Version 5 Firmware: To display M1, M2, or to toggle between M1 and M2, go to **DISPLAY** with the **Next** button and press **Enter**. Use the **Next** button to select **SHOW M1**, **SHOW M2**, or **TOGGLE** and press **Enter**.

CALDATE:

This is not a required entry but can be used for record-keeping or plant maintenance purposes. To edit the calibration date, go to **CALDATE** with the **Next** button and press **Enter**. You then can change the day, month, and year. The display shows the last date with the day flashing. Use the **Next** button to step through the library of digits to select the desired day, then press **Enter**. Repeat this process for the month and year.

ENA PWD:

To enable or disable the password feature, go to **ENA PWD** with the **Next** button and press **Enter**. Use the **Next** button to select **NO PWDS** (password feature disabled), **CFGONLY** (password required to configure only), or **CFG+CAL** (password required to both configure and calibrate) and press **Enter**.

If you selected **CFG ONLY**, the display changes to **CFG PWD**. Press either the **Next** or **Enter** button. Use the **Next** button to step through the library of characters to select the desired first character, then press **Enter**. Your selection is entered and the second character flashes. Repeat this procedure until you have created your password. If the password has less than six characters, use blanks for the remaining spaces. When you have configured the sixth space, the display advances to the next menu item.

If you selected **CFG+CAL**, the display changes to **CAL PWD**. To create the Calibration password, press either the **Next** or **Enter** button. Use the **Next** button to step through the library of characters to select the desired first character, then press **Enter**. Your selection is entered and the second character flashes. Repeat this procedure until you have created your password. If the password has less than six characters, use blanks for the remaining spaces. When you have configured the sixth space, the display advances to **CFG PWD**. Use the same procedure to create the configuration password.

CAUTION

Record your new password before saving changes to the database.

SET GDB:

If your transmitter database becomes corrupted and you receive an **INITERR** message upon startup, this function enables you to rewrite all calibration and configuration values with default values.

CAUTION

Any calibration and configuration values that you have entered will be lost. Therefore, **SET GDB** should **not** be selected if your transmitter is functioning normally.

Character Lists

Table 9. Alphanumeric Character List

Character List*	
@	‘
, (comma)	(
A-Z (uppercase)	)
[	*
\	+
]	-
^	.
_ (underscore)	/
space	0-9
!	:
“	;
#	<
$	>
%	=
&	?

*List only applies to Model 275 HART Communicator not to optional local display.

Table 10. Numeric Character List

Character List
–
. (decimal point)
0 through 9

Error Messages

Table 11. Configuration Error Messages

Parameter	Condition Tested	Error Message	User Action
Password Protection	Password	BAD PWD	Bad password entered, use another.
Write Protection	Write Protection Enabled	REJECT	Displays when user attempts an action that is write protected.
M1 MODE (being changed to square root)	M1 LRV ≠ 0	LRVnot0	Square root mode with nonzero LRV is not valid. Change **M1 LRV** to 0.
	M1 URV < 0	URV<LRV	Square root mode with negative URV is not valid. Change **M1 URV** to positive value.
	OUT DIR is OUT REV	URV<LRV	Square root mode with URV < LRV is not valid. Change **M1 LRV** to 0 and **M1 URV** to positive value.
	M1EFAC < 0	-M1EFAC	Negative **M1 EFAC** is not valid. Change **M1 EFAC** to positive value.
	M2EFAC < 0	-M2EFAC	Negative **M2 EFAC** is not valid. Change **M2 EFAC** to positive value.
	M1EFAC = 0	0M1EFAC	**M1 EFAC** = 0 is not valid. Change **M1 EFAC** to positive value.
	M2EFAC = 0	0M2EFAC	**M2 EFAC** = 0 is not valid. Change **M2 EFAC** to positive value.
	M1EOFF ≠ 0 or M2EOFF ≠ 0	BADEOFF	Square root mode with nonzero **M1 EOFF** and **M2 EOFF** is not valid. Change **M1 EOFF** and **M2 EOFF** to 0.
M1EFAC	M1EFAC < 0	-M1EFAC	Negative **M1 EFAC** is not valid. Change **M1 EFAC** to positive value.
	M1EFAC = 0	0M1EFAC	**M1 EFAC** = 0 is not valid. Change **M1 EFAC** to positive value.
M1 URV	M1URV > max pressure in EGU	URV>FMX	Entered pressure is greater than maximum rated pressure of transmitter. Check entry. Verify EGUs.
	M1URV < min pressure in EGU	URV<FMN	Entered pressure is less than minimum rated pressure of transmitter. Check entry. Verify EGUs.
	M1 URV = M1 LRV	LRV=URV	Cannot set span to 0. Check entry. Check **M1 LRV**.
	M1 turndown exceeds limit	BADTDWN	Check entry. Check **M1 LRV**.
	URV <0 with M1 or M2 SqRt	URV<LRV	Square root mode with nonzero LRV is not valid. Change **M1 LRV** to 0.

Table 11. Configuration Error Messages (Continued)

Parameter	Condition Tested	Error Message	User Action
M1 LRV	M1LRV > max pressure in EGU	LRV>FMX	Entered pressure is greater than maximum rated pressure of transmitter. Check entry. Verify EGUs.
	M1LRV < min pressure in EGU	LRV<FMN	Entered pressure is less than minimum rated pressure of transmitter. Check entry. Verify EGUs.
	M1 URV = M1 LRV	LRV=URV	Cannot set span to 0. Check entry. Check **M1 URV**.
	M1 turndown exceeds limit	BADTDWN	Check entry. Check **M1 URV**.
M2 MODE (being changed to square root)	M1 LRV ≠ 0	LRVnot0	Square root mode with nonzero LRV is not valid. Change **M1 LRV** to 0.
	M1 URV < 0	URV<LRV	Square root mode with negative URV is not valid. Change **M1 URV** to positive value.
	OUT DIR is OUT REV	URV<LRV	Square root mode with URV < LRV is not valid. Change **M1 LRV** to 0 and **M1 URV** to positive value.
	M1EFAC < 0	-M1EFAC	Negative **M1 EFAC** is not valid. Change **M1 EFAC** to positive value.
	M2EFAC < 0	-M2EFAC	Negative **M2 EFAC** is not valid. Change **M2 EFAC** to positive value.
	M1EFAC = 0	0M1EFAC	**M1 EFAC** = 0 is not valid. Change **M1 EFAC** to positive value.
	M2EFAC = 0	0M2EFAC	**M2 EFAC** = 0 is not valid. Change **M2 EFAC** to positive value.
	M1EOFF ≠ 0 or M2EOFF ≠ 0	BADEOFF	Square root mode with nonzero **M1 EOFF** and **M2 EOFF** is not valid. Change **M1 EOFF** and **M2 EOFF** to 0.
M2EFAC	M2EFAC < 0	-M2EFAC	Negative **M2 EFAC** is not valid. Change **M2 EFAC** to positive value.
	M2EFAC = 0	0M2EFAC	**M2 EFAC** = 0 is not valid. Change **M2 EFAC** to positive value.

6. Maintenance

DANGER

For nonintrinsically safe installations, to prevent a potential explosion in a Division 1 hazardous area, de-energize transmitters before you remove threaded housing covers. Failure to comply with this warning could result in an explosion resulting in severe injury or death.

Error Messages

For error messages displayed on the HART Communicator refer to MI 020-366.

Parts Replacement

Parts replacement is generally limited to the electronics module assembly, housing assembly, sensor assembly, terminal block assembly, cover O-rings, and optional display. For part numbers relating to the transmitter and its options, see PL 009-005.

Replacing the Terminal Block Assembly

1. Turn off transmitter power source.
2. Remove the Field Terminals and the Electronics compartment covers by rotating them counterclockwise. Screw in cover lock if applicable.
3. Remove the digital display (if applicable) as follows: grasp the two tabs on the display and rotate it about 10° in a counterclockwise direction.
4. Remove the electronics module from the housing by loosening the two captive screws that secure it to the housing. Then pull the module out of the housing far enough to gain access to the cable connectors on the rear of the module.
5. Remove the four socket head screws securing the terminal block.
6. Disconnect the terminal block cable connector from the electronics module.
7. Remove the terminal block and the gasket under it.
8. Connect the new terminal block cable connector to the electronics module.
9. Install the new terminal block and new gasket and reinstall the four screws to 0.67 N·m (6 in·lb) in several even increments.
10. Reinstall the electronics module (and digital display if applicable).
11. Reinstall the covers onto the housing by rotating them clockwise to seat the O-ring into the housing and then continue to hand tighten until the each cover contacts the housing metal-to-metal. If cover locks are present, lock the cover per the procedure described in “Cover Locks” on page 24.
12. Turn on transmitter power source.

Replacing the Electronics Module Assembly

To replace the electronics module assembly, refer to Figure 44 and proceed as follows:

1. Turn off transmitter power source.
2. Remove the electronics compartment cover by rotating it counterclockwise. Screw in cover lock if applicable.
3. Remove the digital display (if applicable) as follows: grasp the two tabs on the display and rotate it about 10° in a counterclockwise direction. Pull out the display and disconnect its cable.

4. Remove the electronics module from the housing by loosening the two captive screws that secure it to the housing. Then pull the module out of the housing far enough to gain access to the cable connectors on the rear of the module.

CAUTION

The electronics module is “one assembly” at this point and is electrically and mechanically connected to topworks with a flexible ribbon signal cable, a 2-wire power cable, and in some cases, a cable for an external zero pushbutton. Do **not** exceed the slack available in these cables when removing the assembled module.

5. Unplug all cable connectors from the rear of the electronics module and place the module on a clean surface.
6. Predetermine connector orientation, then insert the cable connectors into the replacement module. Replace the module in the housing using care not to pinch the cables between the module and the housing. Tighten the two screws that secure the module to the housing.
7. Connect the cable from the digital display to the electronics module. Ensure that the O-ring is fully seated in the display housing. Then, holding the digital display by the tabs at the sides of the display, insert it into the housing. Secure the display to the housing by aligning the tabs on the sides of the assembly and rotating it about 10° in a clockwise direction.
8. Reinstall the cover onto the housing by rotating it clockwise to seat the O-ring into the housing and then continue to hand tighten until the cover contacts the housing metal-to-metal. If cover locks are present, lock the cover per the procedure described in “Cover Locks” on page 24.
9. Turn on transmitter power source.

The module replacement procedure is now complete.

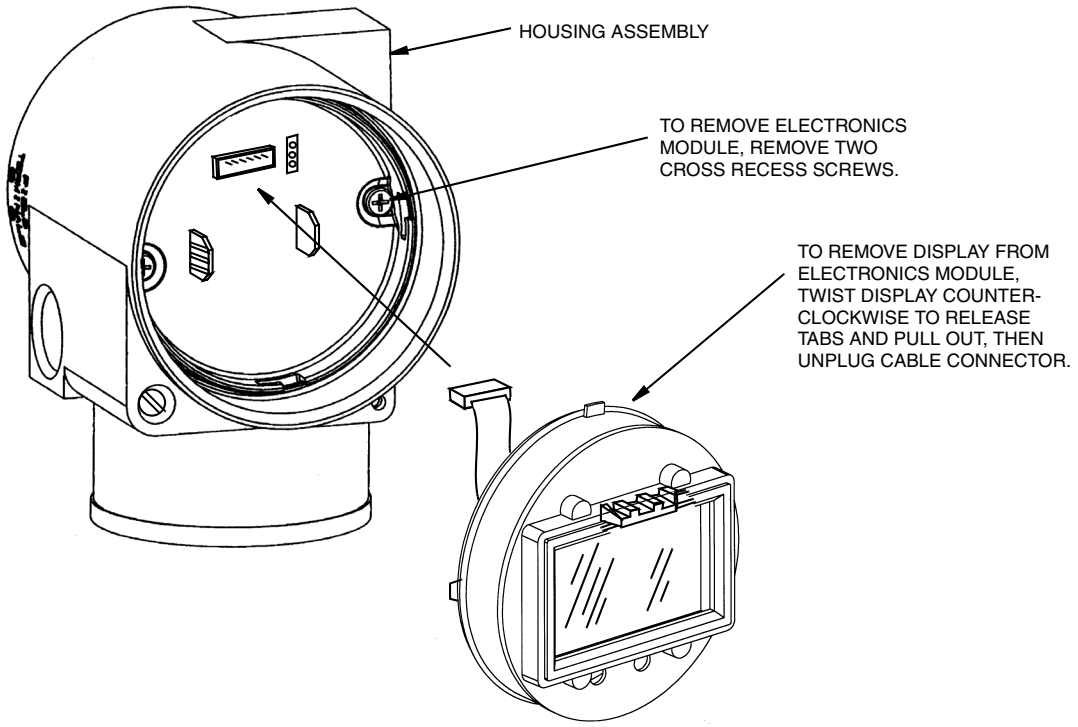

Figure 44. Replacing the Electronics Module Assembly and Display

Removing and Reinstalling a Housing Assembly

To remove and reinstall a housing assembly, refer to Figure 44 and proceed as follows:

1. Remove the electronics module per Steps 1 through 5 in the previous procedure.
2. Remove the housing by rotating it counterclockwise (when viewed from the top) using caution to avoid damaging the ribbon cables.
3. Inspect the sensor O-ring and lubricate if necessary with silicone lubricant (Part Number 0048130 or equivalent).
4. Reinstall the housing by reversing Step 2.
5. Reinstall the electronics module per Steps 6 through 9 in the previous procedure.

Adding the Optional Display

To add the optional display, refer to Figure 44 and proceed as follows:

1. Turn off transmitter power source.
2. Remove the electronics compartment cover by rotating it counterclockwise. Screw in cover lock if applicable.
3. Plug the display into the receptacle at the top of the electronics assembly.
4. Ensure that the O-ring is seated in its groove in the display housing. Then insert the display into the electronics compartment by grasping the two tabs on the display and rotating it about 10° in a clockwise direction.
5. Install the new cover (with a window) onto the housing by rotating it clockwise to seat the O-ring into the housing and then continue to hand tighten until the cover contacts the housing metal-to-metal. If cover locks are present, lock the cover per the procedure described in “Cover Locks” on page 24.
6. Turn on transmitter power source.

Replacing the Sensor Assembly

To replace the sensor assembly, refer to Figures 45 and 46 and proceed as follows:

1. Remove the electronics module as described above.
2. Remove the housing as described above.
3. Remove the process covers from sensor by removing two hex head bolts.
4. Replace the gaskets in the process covers.
5. Install the process covers and housing on the new sensor. Torque cover bolts to 100 N·m (75 lb·ft) in several even increments. Torque values are 68 N·m (50 lb·ft) when 316 ss bolts are specified; 75 N·m (55 lb·ft) when B7M bolts are specified.
6. Reinstall electronics module.
7. Pressure test the sensor and process cover assembly by applying a hydrostatic pressure of 150% of the maximum static and overrange pressure rating to both sides of the process cover/sensor assembly simultaneously through the process connections. Hold pressure for one minute. There should be no leakage of the test fluid through the gaskets. If leakage occurs, retighten the cover bolts per Step 5 (or replace the gaskets) and retest.

CAUTION

Perform hydrostatic test with a liquid and follow proper hydrostatic test procedures.

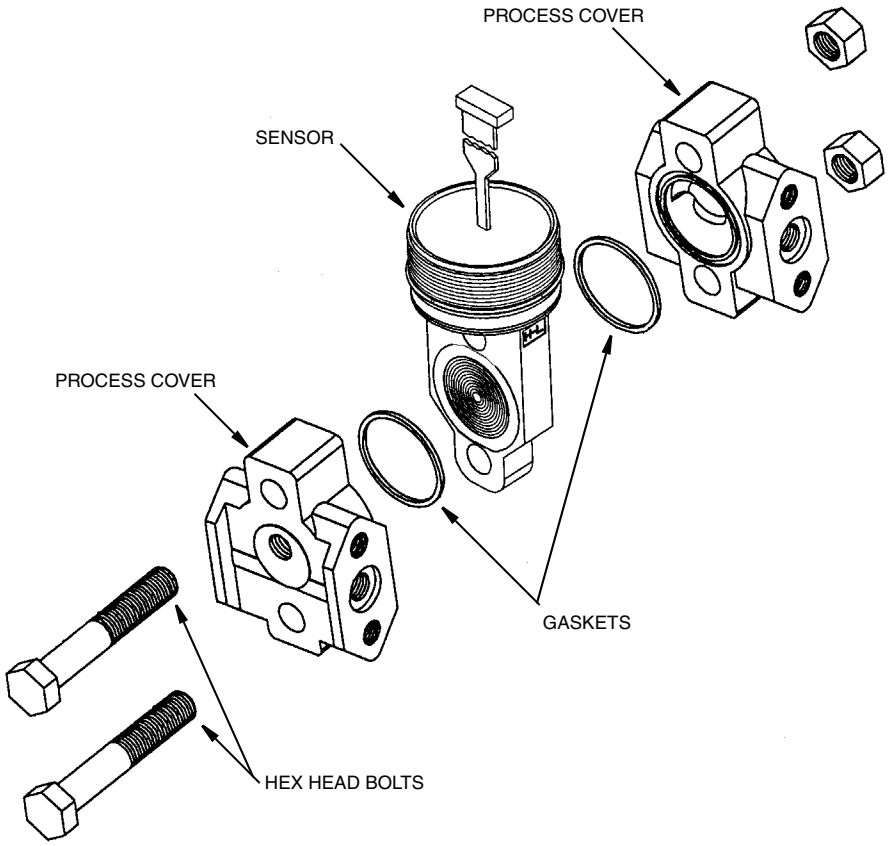

Figure 45. Replacing the Sensor Assembly

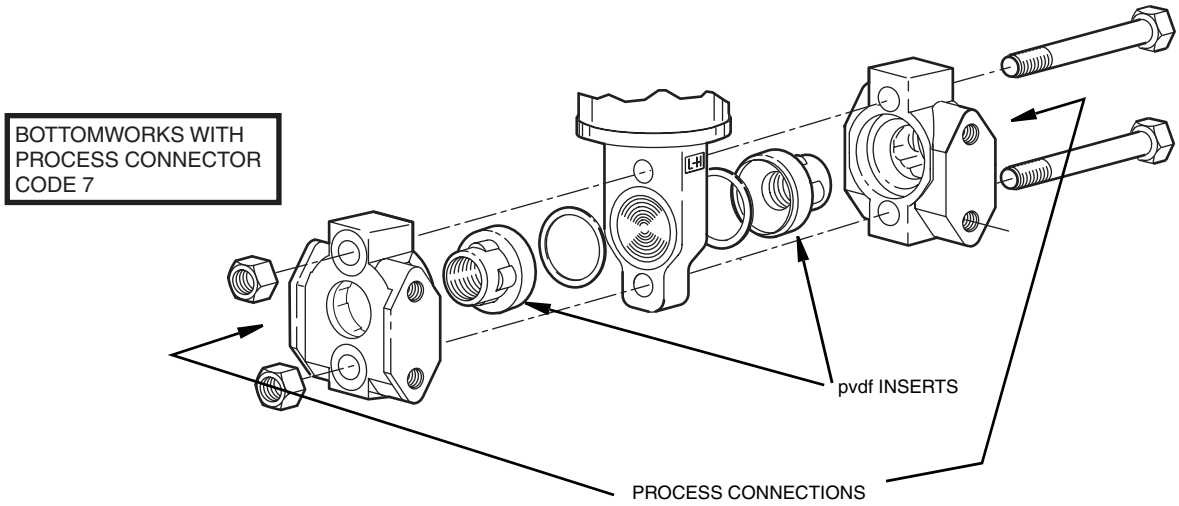

Figure 46. Replacing the Sensor Assembly (pvdf Inserts)

Rotating Process Covers for Venting

As received, your IASPT Transmitter provides sensor cavity draining without the need for side drain connections, regardless of whether the transmitter is mounted vertically or horizontally. Sensor cavity venting is provided by mounting the transmitter horizontally or with the optional vent screw (-V). How-

ever, if you did not specify this option, you can still achieve venting (instead of draining) with vertical mounting by rotating the process covers. See Figure 47.

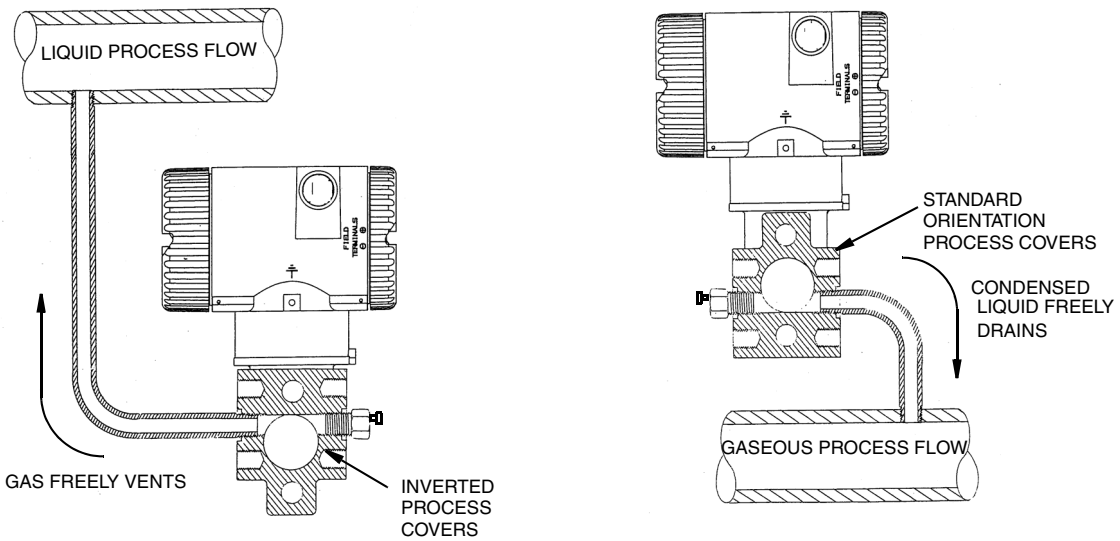

Figure 47. Sensor Cavity Venting and Draining

To rotate the process covers, refer to Figure 45 and proceed as follows:

1. Turn off the transmitter power source and remove the transmitter from the process.
2. Remove the process covers from sensor by removing two hex head bolts.
3. Replace gaskets in process covers.
4. Rotate the process covers so that the longer tab is at the bottom.
5. Reinstall process covers and bolts. Torque cover bolts to 100 N·m (75 lb·ft) in several even increments. Torque values are 68 N·m (50 lb·ft) when 316 ss bolts are specified; 75 N·m (55 lb·ft) when B7M bolts are specified.
6. Pressure test the sensor and process cover assembly by applying a hydrostatic pressure of 150% of the maximum static and overrange pressure (see “Standard Specifications” on page 5) to both sides of the process cover/sensor assembly simultaneously through the process connections. Hold pressure for one minute. There should be no leakage of the test fluid through the gaskets. If leakage occurs, retighten the cover bolts per Step 4 or replace the gaskets and retest.

CAUTION

Perform hydrostatic test with a liquid and follow proper hydrostatic test procedures.

Index

C
Calibration 37
Using a HART Communicator 41
Using a PC20 41
Using a PC50 Configurator 41
Using the Local Display 41
Calibration Notes 37
Calibration Setup 39
Configuration 49
Using a HART Communicator 50
Using a PC20 Configurator 50
Using a PC50 Configurator 50
Using the Local Display 50
Cover Locks 24

D
Display, Positioning the 24

E
Error Messages
Calibration 47
Configuration 59
Operation 35

H
Housing, Positioning the 24

I
Identification 3
Installation 13

M
Maintenance 61
Mounting 13

O
Operation Via Local Display 31

P
Parts Replacement 61
Piping, Installation of Flow Measurement 21

R
Reference Documents 1
Reranging 33

S
Seal Liquid, Filling the System with 23
Specifications

Product Safety 10
Standard 5

W
Wiring 25
Write Protect Jumper, Setting the 24

Z
Zero Adjustment Using External Zero Button 45

ISSUE DATES
DEC 2001
OCT 2003
APR 2004
FEB 2005
JUN 2005
FEB 2006
AUG 2006
Vertical lines to right of text or illustrations indicate areas changed at last issue date.

33 Commercial Street
Foxboro, MA 02035-2099
United States of America
http://www.foxboro.com
Inside U.S.: 1-866-746-6477
Outside U.S.: 1-508-549-2424 or contact your local Foxboro Representative.
Facsimile: (508) 549-4999

Invensys, Foxboro, and I/A Series are trademarks of Invensys plc, its subsidiaries, and affiliates.
All other brand names may be trademarks of their respective owners.

Copyright 2001-2006 Invensys Systems, Inc.
All rights reserved

Printed in U.S.A. 0806

FCV 3001 Flow control valve for KAFB 106228

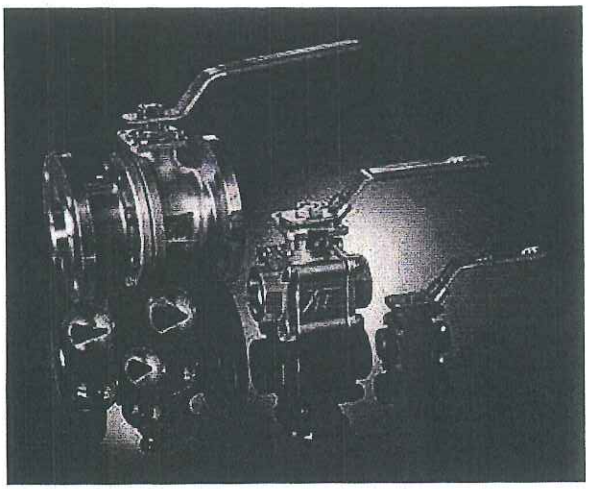

Triac "V" Series Ball Valves are ideal for achieving more precise control with the simplicity and sealing features of a ball valve. We offer them 1/2" – 4" in a 3-piece design and 1/2"– 6" flanged. The standard "V" notch options are 30, 60 & 90. While they are available as manual valves, we specialize in automating them to suit your particular control requirements.

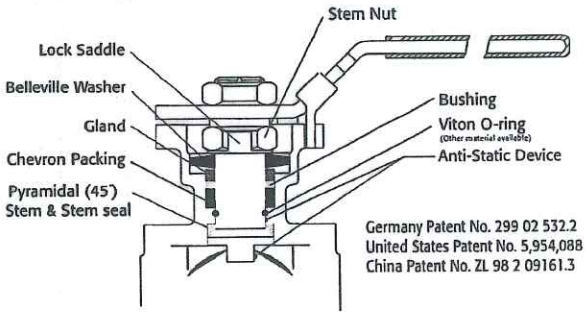

Easy to Automate!

See automated data sheets for pre-sized assemblies

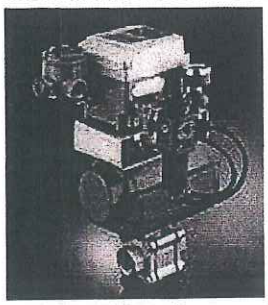

Pneumatic

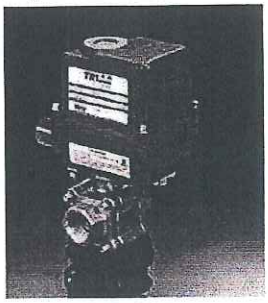

Electric

TRIAC CONTROLS

"V" Series
Control Port Ball Valves

Sizes 1/2" – 6"

3 Piece and 150# Flanged

316SS or WCB

30, 60 & 90 "V" Notch Standard
Others on Request

TA-Luft 2002, Sec.5.3.6.4
TA-Luft Certified for Low Emissions
VDI 2440 Nov.2000, Sec.3.3.1.3

HOW TO ORDER MANUAL VALVES
SAMPLE PART #
V8C-TH-0200-XXX

- V Port
- Valve Series
- Carbon Steel
- Threaded Ends
- Valve Size
- Seat Material
- Special Designation
- Additional Special Designation (V30, V60 or V90)

See part number matrix for itemized options

"V" Series Control Port Ball Valves

A-T Controls, Inc.
9955 International Blvd.
Cincinnati, Ohio 45246
www.atcontrols.com
PHONE (513) 247-5465
FAX (513) 247-5462
sales@atcontrols.com

VM-(A)-20130430
Copyright 2013 A-T Controls, Inc.

"V" Series

Triac "V" port control valves are available with 30V, 60V & 90V notch. V port valves offer better and more consistent control than traditional round ported ball valves. We offer this valve with the control port cast and machined into the ball, not in the seat. This allows for much better flow characteristics and eliminates the need to replace seats. The 30 option allows for finer tapered control throughout the valve rotation and the 60 & 90 offers a larger Cv in addition to controlled flow.

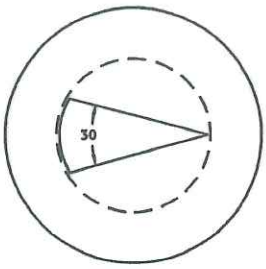

30 V-Port

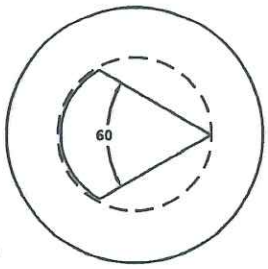

60 V-Port

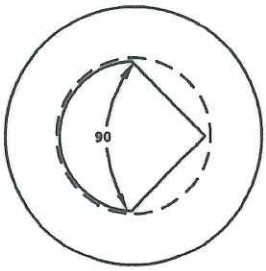

90 V-Port

AW
5/28/15

The 50/50 seat is standard with all V port valves. The 50% SST powder and 50% PTFE offers both strength and superior sealing properties.

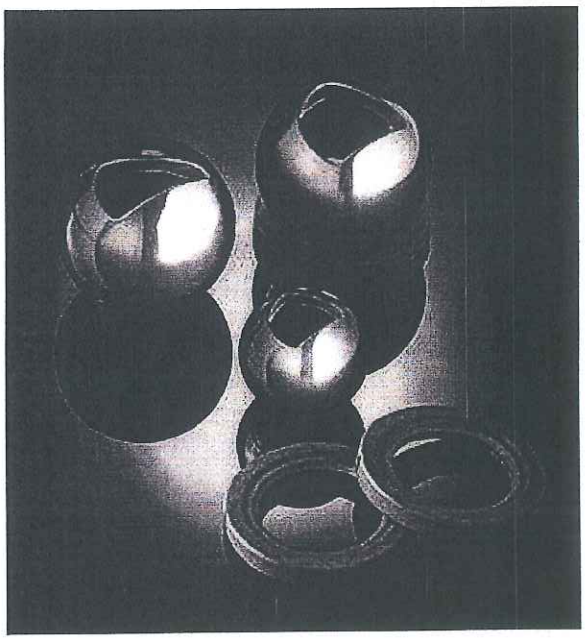

"V" Series

"V" Series Flow Coefficients- Cv Chart

Valve Size	Ball Angle	0%	15%	20%	30%	40%	50%	60%	70%	80%	90%	100%
1/2"	30	0	0.1	0.1	0.2	0.3	0.5	0.8	1.1	1.6	2.2	2.6
	60	0	0.1	0.1	0.3	0.5	0.9	1.4	2	3.3	4.4	6
	90	0	0.1	0.2	0.4	0.6	0.9	1.5	2.2	3.8	5.4	6.9
3/4"	30	0	0.1	0.2	0.5	0.7	1.1	1.8	2.4	3.3	4.5	5.4
	60	0	0.1	0.2	0.7	1	1.7	2.8	4	6.5	9	12
	90	0	0.2	0.4	0.8	1.2	2	3.1	4.6	8	11.3	14
1"	30	0	0.1	0.3	0.8	1.3	2.3	3.5	5.1	9.8	8.5	10
	60	0	0.2	0.4	1.1	1.8	3.4	5.3	7.9	12.3	15.3	21
	90	0	0.2	0.6	1.8	3.4	5.1	8.1	11.4	16	21	29
1 1/4"	30	0	0.2	0.4	1.1	2	3.7	5.5	8	10	13	15
	60	0	0.2	0.6	1.8	3	5.5	9.5	12.8	19	26	39
	90	0	0.3	0.8	2	5	8	14	19	28	39	55
1 1/2"	30	0	0.3	0.6	1.6	3	5	7.5	11	14	17	20
	60	0	0.4	0.8	2.5	4	8	13	19	27	40	52
	90	0	0.4	0.9	3.5	7	13	20	31	42	63	78
2"	**30**	**0**	**0.4**	**1.2**	**3.8**	**6**	**10**	**15**	**23**	**31**	**43**	**60**
	60	0	0.4	1.5	4.6	9	16.5	27	39	55	83	110
	90	0	0.5	2	6	12	22	35	45	70	105	135
2 1/2"	30	0	0.4	1	4	8	12	18	28	37	62	75
	60	0	0.4	1.5	5	10	21	34	53	75	103	150
	90	0	0.5	1.7	7	14	28	48	70	106	160	218
3"	30	0	0.5	1.2	4	8	14	23	33	46	65	82
	60	0	0.5	2.5	6	14	25	40	65	91	128	165
	90	0	0.7	3.5	8	18	35	60	90	135	205	310
4"	30	0	0.6	2	6	15	29	48	71	100	130	159
	60	**0**	**0.7**	**3**	**11**	**25**	**40**	**59**	**90**	**141**	**212**	**356**
	90	0	1	3.5	16	40	75	125	190	295	442	670
6"	30	0	0.9	3.2	14	33	60	103	155	220	280	350
	60	0	2	5	22	60	110	190	285	416	586	800
	90	0	3	8	35	90	160	280	425	650	970	1480
FL		0	0.96	0.95	0.94	0.93	0.92	0.9	0.88	0.86	0.82	0.75
Xt		0	0.98	0.77	0.71	0.67	0.64	0.63	0.62	0.55	0.43	0.4

aa
5/28/15

Pressure vs. Temperature Charts 1"– 6"

150# Flanged Design

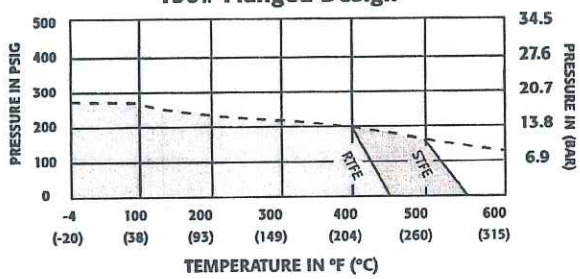

NOTE: Dotted line shows the rating for valve body. Solid line shows the rating for valve seat. Both ratings need to be consulted when determining the limitation of the valve for specific application.

Consult factory for other seat material.

3-piece Design

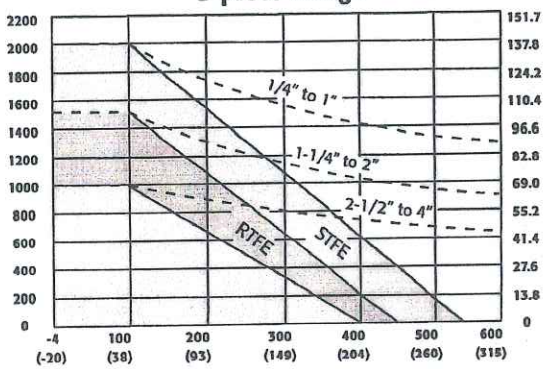

"V" Series
3 Piece

~~88 Series~~
V-Port
Control Valve

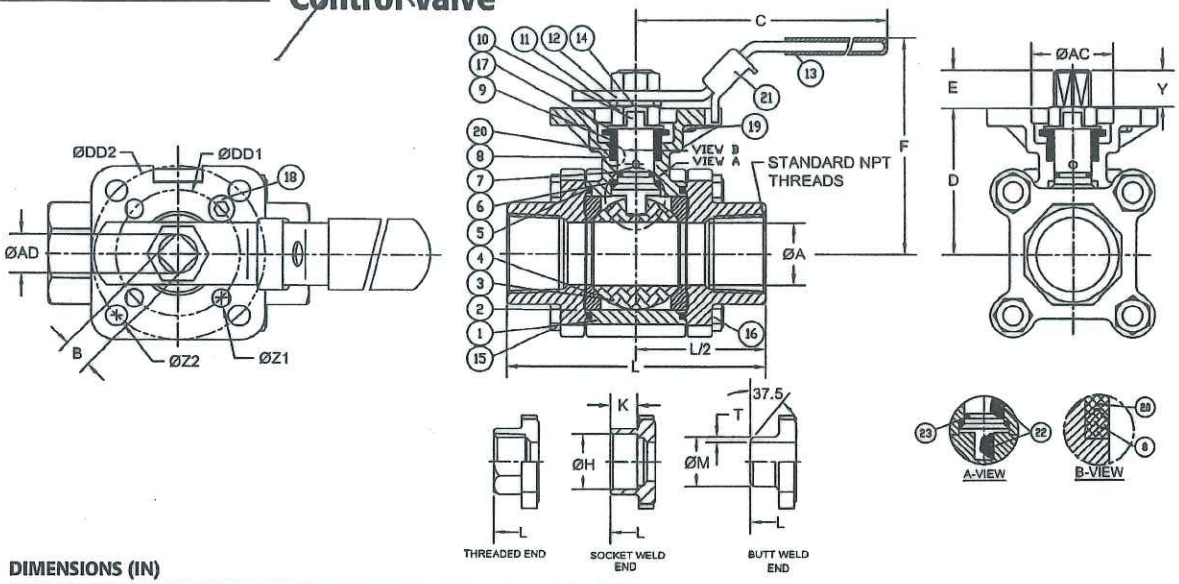

DIMENSIONS (IN)

SIZE	ØA	B	C	D	E	F	H	K	L	M	T	Y	AC	AD	DD1	DD2	ØZ2	ØZ1	(LBS)	ISO5211
1/2"	0.59	0.354	5.47	1.66	0.25	3.00	0.85	0.39	2.85	0.85	0.06	0.25	1.07	0.44	1.654	1.969	0.28	0.28	2.0	F04/F05
3/4"	0.79	0.354	5.47	1.83	0.33	3.20	1.07	0.51	3.36	1.07	0.06	0.33	1.07	0.44	1.969	2.756	0.34	0.28	3.0	F05/F07
1"	0.98	0.433	6.50	2.31	0.41	3.86	1.34	0.51	4.15	1.34	0.06	0.41	1.34	0.56	1.969	2.756	0.34	0.28	4.5	F05/F07
1-1/4"	1.26	0.433	6.50	2.46	0.41	4.00	1.69	0.51	4.37	1.68	0.06	0.41	1.34	0.56	1.969	2.756	0.34	0.28	6.0	F05/F07
1-1/2"	1.50	0.551	8.46	3.11	0.53	5.04	1.92	0.51	5.01	1.91	0.06	0.53	1.54	0.74	1.969	2.756	0.34	0.28	10.0	F05/F07
2"	1.97	0.551	8.46	3.42	0.53	5.35	2.40	0.63	5.62	2.38	0.06	0.53	1.54	0.74	1.969	2.756	0.35	0.30	13.0	F05/F07
2-1/2"	2.56	0.748	10.31	4.28	0.66	6.60	2.89	0.63	7.28	3.00	N/A	0.66	2.09	0.94	2.756	4.016	0.47	0.39	26.0	F07/F10
3"	3.15	0.748	10.31	4.63	0.70	6.96	3.54	0.63	8.07	3.54	N/A	0.70	2.09	0.94	2.756	4.016	0.47	0.39	34.0	F07/F10
4"	3.94	0.748	12.28	5.26	0.66	7.59	4.54	0.79	9.45	4.57	N/A	0.66	2.09	0.94	2.756	4.016	0.47	0.39	52.0	F07/F10

"V" Series
Flanged

90 Series
V-Port
Control Valve
Flanged

AW 5/29/15

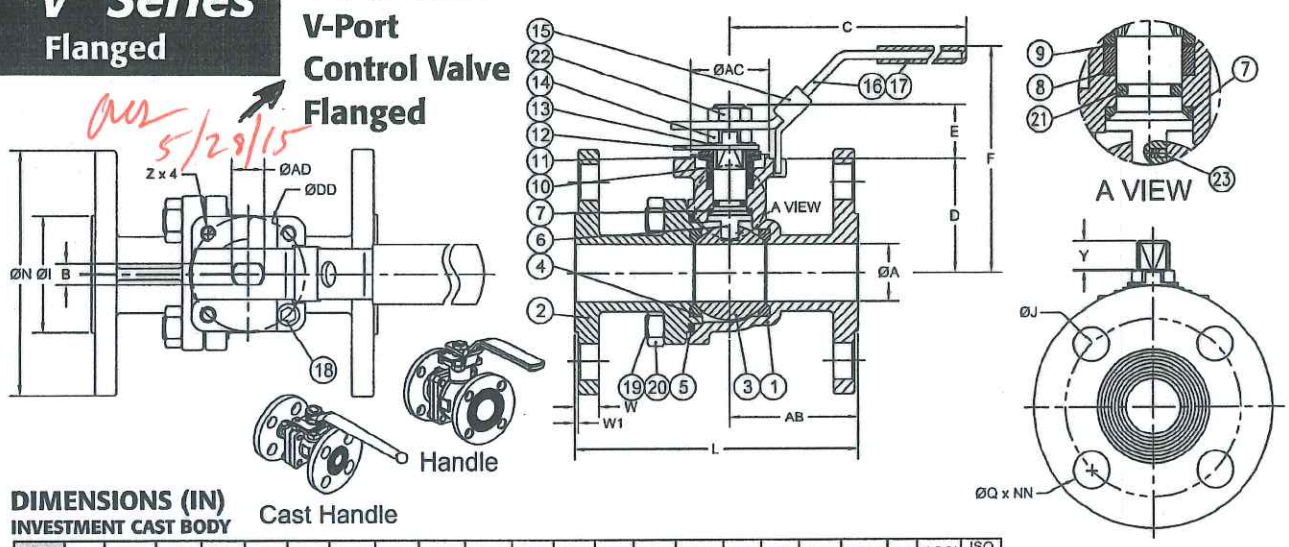

DIMENSIONS (IN)
INVESTMENT CAST BODY

SIZE	A	B	C	D	E	F	I	J	L	N	Q	W	W1	Y	Z	AB	AC	AD	DD	NN	(LBS)	ISO 5211
1/2"	0.59	0.315	6.69	1.34	0.92	3.15	1.47	2.38	4.26	3.50	0.63	0.44	0.06	0.36	M5	1.82	1.17	0.43	1.654	4	3.7	F04
3/4"	0.79	0.315	6.69	1.65	0.94	3.43	1.82	2.75	4.62	3.88	0.63	0.44	0.06	0.40	M5	2.17	1.17	0.43	1.654	4	4.6	F04
1"	0.98	0.382	8.05	1.95	0.94	3.85	2.08	3.13	5.00	4.26	0.63	0.44	0.06	0.32	M6	2.20	1.37	0.56	1.969	4	6.8	F05
1-1/2"	1.50	0.472	10.28	3.08	1.37	6.02	2.88	3.88	6.50	5.00	0.63	0.56	0.06	0.58	M8	2.81	2.17	0.75	2.756	4	13.6	F07
2"	1.97	0.472	10.28	3.40	1.37	6.38	3.62	4.75	7.02	6.00	0.75	0.63	0.06	0.58	M8	3.38	2.17	0.75	2.756	4	19.2	F07
2-1/2"	2.56	0.472	10.28	3.83	1.37	6.81	4.12	5.50	7.49	7.00	0.75	0.69	0.06	0.58	M8	3.02	2.17	0.75	2.756	4	30.0	F07
3"	3.15	0.591	13.94	4.23	1.81	6.95	5.00	6.00	8.01	7.50	0.75	0.75	0.06	0.93	M10	4.01	2.76	0.94	4.016	4	41.0	F10
4"	3.94	0.591	13.94	4.82	1.79	7.52	6.19	7.50	9.04	9.00	0.75	0.94	0.06	0.93	M10	4.06	2.76	0.94	4.016	8	65.0	F10

For 6" valve dimensions please see D9 brochure.

Viton® is a registered trademark of E.I. DuPont de Nemours.

A-T Controls reserves the right to change product designs and technical/dimensional specifications without notice.

A-T Controls, Inc.
9955 International Blvd.
Cincinnati, Ohio 45246
www.atcontrols.com
PHONE (513) 247-5465
FAX (513) 247-5462
sales@atcontrols.com

TRIAC CONTROLS

WE/XE Series

WE NEMA 4, 4X & 6

XE NEMA 4, 4X, 6 & 7

SE NEMA 4, 4X, 6 & 9 IP68

Acutator Model	Output Torque	90° Cycle Time (sec)	Motor Size	Full Load Amps					Locked Rotor Amps					Handwheel Turns	Weight
				AC/DC	1 Phase		3 Phase		AC/DC	1 Phase		3 Phase			
WE / XE	In-Lbs.	60 / 50 Hz	Watts	24V	110V/60Hz	220V/60Hz	380V	440V	24V	110V/60Hz	220V/60Hz	380V	440V	N	Lbs.
-690	690	13 / 16	15	5	1.2	0.6	N/A	N/A	12.8	1.4	0.7	N/A	N/A	10	16.4
-1350	1350	21 / 25	40	6	2	1	0.28	0.36	16.9	2.5	1.2	0.75	0.66	11	36.7
-1700	1700	21 / 25	40	7.4	2.3	1.1	0.28	0.36	16.9	2.5	1.2	0.75	0.66	11	36.7
-2640	2640	26 / 31	40	8.9	2.3	1.3	0.27	0.34	30.8	2.9	1.4	1	0.87	13.5	48.6
-4400	4400	26 / 31	90	N/A	4.5	1.9	0.42	0.47	N/A	5	2.4	1.73	1.5	13.5	50.8
-5200	5200	26 / 31	90	N/A	4.5	2	0.42	0.47	N/A	5	2.4	1.73	1.5	13.5	50.8
-6900	6900	31 / 37	180	N/A	5.1	2.4	0.61	0.67	N/A	7.3	3.8	2.73	2.38	16.5	64
-10500	10500	31 / 37	180	N/A	5.4	3.4	0.61	0.67	N/A	7.3	3.8	2.73	2.38	16.5	64
-17500	17500	95 / 112	180	N/A	5.8	2.4	0.61	0.67	N/A	7.3	3.8	2.73	2.38	49.5	167
-25900	25900	95 / 112	180	N/A	6.3	3.4	0.61	0.67	N/A	7.3	3.8	2.73	2.38	49.5	167

acr 5/28/15

Rev.20130924

Standard Specifications

Enclosure.....Weatherproof enclosure, IP67, TYPE 4, 4X, 6
AWWA.....Conforms to AWWA C540-93 requirements
Power supply.....110/220V AC 1PH, 220/380/440/460/480VAC, 3 Phase, 50/60Hz, ±10%
Control power supply.....110/220V AC 1PH, 50/60Hz, ±10%
Duty cycle(on-off).....70% Max 1800 start/hour
Duty cycle(modulating).....70% Max 1800 start/hour
Motor.....Class F Reversible Induction motor
Limit switches.....Open / Close, SPDT, 16A 1/2HP 125/250VAC, 0.6A 125VDC, 0.3A 250VDC
Additional limit switches.....Open / Close, SPDT, 16A 1/2HP 125/250VAC, 0.6A 125VDC, 0.3A 250VDC
Torque switches.....Open / Close, SPDT, 16A 1/2HP 125/250VAC, 0.6A 125VDC, 0.3A 250VDC (except WE/XE-690)
Stall protection.....Built-in thermal protection, Open 302°F (150°C) / Close 207°F (97°C)
Travel angle.....90° ± 10°
Indicator.....Continuous position indicator
Manual override.....Declutching mechanism
Self locking.....Provided by double worm gearing
Mechanical stopper.....Open / Close (external adjustable screws)
Space heater.....7-10W (110/220V AC) Anti-condensation
Cable Conduit.....Two 3/4" NPT
Lubrication.....Grease moly (EP type)
Terminal block.....Spring loaded lever push type
Materials.....Steel, Aluminium alloy, Al bronze, Polycarbonate
Ambient temperature.....-4°F —158°F (optional -40° Low Temp Kit)
Ambient humidity.....90% RH Max. (non-condensing)
External coating.....Anodizing treatment before Dry powder, Polyester, Munsell no. 5R 3.5/12

Options Specifications

ATEX II 2 G
EEx d IIB T4

Explosion-Proof enclosure II 2 G, E Ex d IIB T4, IP67 ..... ATEX certification
Designed to comply with NEMA 7 Explosion Proof
Watertight enclosure (IP68 10M 72HR) ..... SE/XE Series
Potentiometer unit (1K ~10K) ..... WE/XE Series
Proportional control unit (input, output 0~10V DC, 4~20mA DC) ..... WE/XE Series
Semi-Integral control unit (Local/Remote Selector Switches) ..... except WE/XE-690
Intelligent Digital control unit (Local/Remote Selector Switches) ..... except WE/XE-690
Current position transmitter (output 4-20mA DC) ..... WE/XE Series
Extension 120°, 180°, 270° turn ..... except WE/XE-17500, 25900
Duty Cycle 70% max (in Ambient temperature) ..... except WE/XE-690
DC motor (24V DC) ..... WE/XE-690C—WE/XE-2640C
AC/DC 24V control ..... WE/XE-690A—WE/XE-2640A
Lever plate actuator ..... except WE/XE-690
Signal lamp unit (red-close, green-open, yellow-over torque)
Fire Proofing Actuator 1050 ±5°C/50 min ..... Consult factory
Fire Proofing Actuator 250 ±5°C/150 min ..... Consult factory

Explosion Proof Enclosure
- ATEX Certification
- Designed to comply with NEMA 7 Explosion Proof

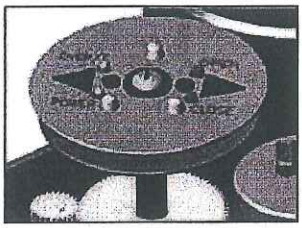

Signal LED Unit
Large indicator with monitoring lamps (Over torque, open and close)

Fire Proofing Acuator

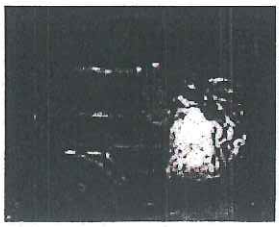

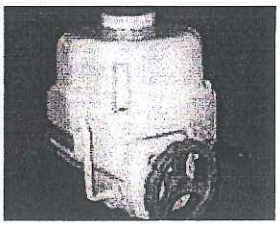

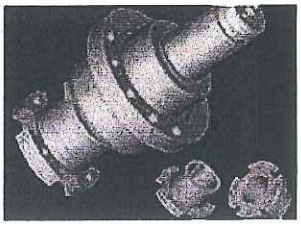

Removable Drive Bushing

High Speed Electric Actuators

Model	Output Torque	Speed (60Hz)	Torque Switch Setting
WE-690*HS2	290 In-Lbs	4.5 seconds	N/A
WE-690*HS1	400 In-Lbs	7.0 seconds	N/A
WE-1350*HS2	840 In-Lbs	7.0 seconds	1,350 In-Lbs
WE-1350*HS1	1,200 In-Lbs	10.5 seconds	1,350 In-Lbs
WE-2640*HS2	1,390 In-Lbs	8.5 seconds	2,640 In-Lbs
WE-2640*HS1	2,050 In-Lbs	13.0 seconds	2,640 In-Lbs
WE-4400*HS2	2,350 In-Lbs	8.5 seconds	4,400 In-Lbs
WE-4400*HS1	3,500 In-Lbs	13.0 seconds	4,400 In-Lbs
WE-6900*HS2	4,500 In-Lbs	10.5 seconds	6,900 In-Lbs
WE-10500*HS1	6,700 In-Lbs	15.5 seconds	10,500 In-Lbs
WE-17500*HS2	12,000 In-Lbs	31.0 seconds	17,500 In-Lbs
WE-25900*HS1	18,000 In-Lbs	47.0 seconds	25,900 In-Lbs

Motor specifications remain the same.
*Must specify voltage - see part number matrix on back cover.

TRIAC CONTROLS

Modulating Options for WE-500-25900

AS 5/28/15

Modulating Cards

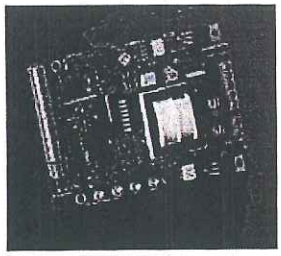

TMC3 Electronic Modulating Card

- Auto Calibration for Easy Setup
- 10 Bit Microprocessor controller for precise positioning and control
- 4-20mA, 1-5mA, 0-10 VDC, 1-5 VDC, 0-135 Ohm or Command Signal Potentiometer
- TMC3 Can be programmed to Fall in Place, Fail CW, or Fail CCW on loss of command signal
- Characterized Control-Linear, quick opening (Square root), or Equal Percentage (Square)
- OnBoard 4-20 mA transmitter (standard)

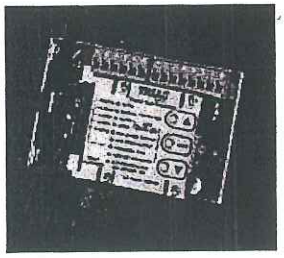

TDC Electronic Modulating Card

- 450 Point Resolution, 16 Bit Micro Processor
- Auto Calibration
- Adaptive Control Feature (continuously adjusts for load and actuator conditions and positions to ±0.1°)
- Dynamic Breaking
- 4-20mA, 1-5V, 0-5V, 0-10V
- Programmed to Fail in place, Fail CW, or Fail CCW on loss of command signal
- 4-20mA Feedback Transmitter (Optional)

EPC Electronic AS-i Network Card

- AS-i Version 2.1
- 120 VAC or 24VDC Power
- Emergency Override-Normal Operation is overridden when actuator is driven to either Ch or CCh position on command
- Built in Emergency Position Command (EPC) overrides normal operation and automatically operates the valve into either the open or closed position (normally this is the closed position) as defined in the user specifications
- Signal Sentinel continuously monitors the EPC system offering additional failsafe backup in the event of an unexpected local event

Boiler Feedwater Application

- Control signal 4-20mA, specify these parts: LRC-100, POT-102 & Extended Bracket.
- Control signal 0-135 ohm, specify these parts: TDC-100, XMA-108, POT-102 & Extended Bracket

Other Network Cards Available Upon Request

TRIAC CONTROLS

Dimensional Drawing

WE/XE-690, 1350, 1700, 2640, 4400, 5200, 6900, 10500

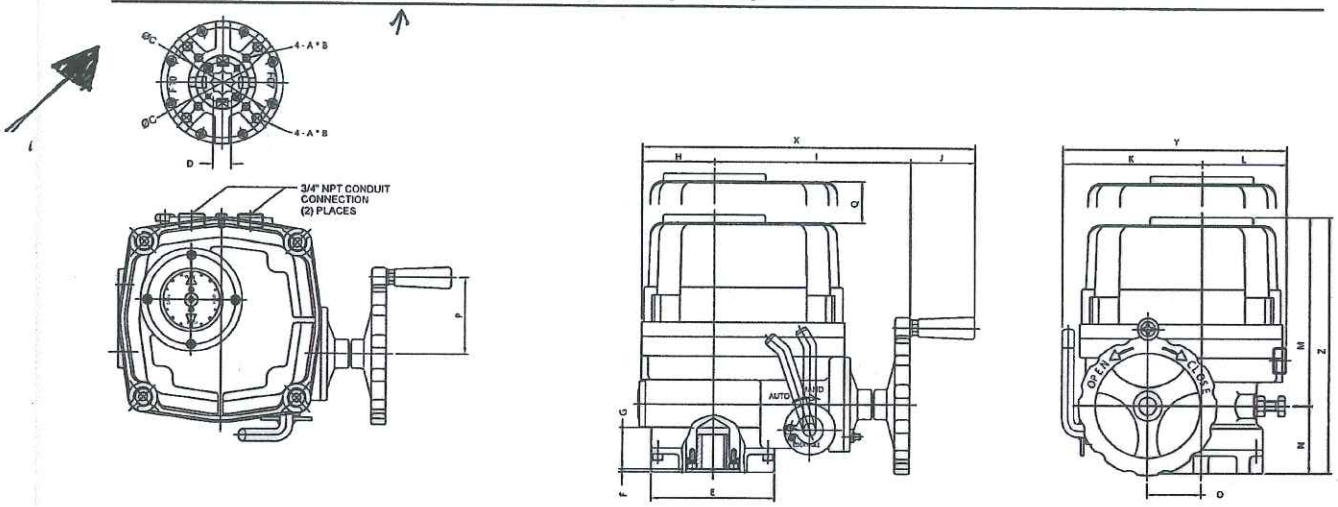

WE/XE-17500, 25900

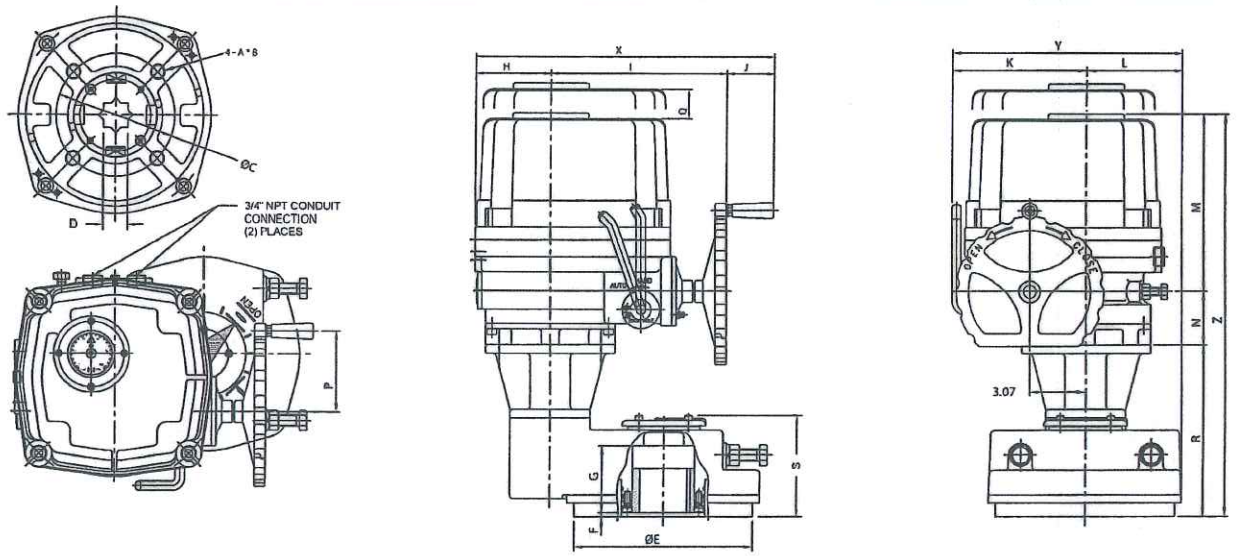

Dimensions

Units (inches)

Model WE/XE	ISO 5211	A	B	C	D sq	E	F	G	H	I	J	K	L	M	N	O	P	Q	R	S	X	Y	Z
-690	F07	M8	0.47	2.756	0.669	3.46	0.12	1.26	1.97	6.18	2.01	3.94	2.76	6.57	2.09	1.57	2.36	4.72	-	-	10.16	6.69	9.25
-1350	F07/F10	M8/M10	0.47/0.59	2.756/4.016	0.748	4.92	0.12	1.65	2.87	7.87	2.56	5.59	3.43	7.56	2.68	2.13	3.07	6.30	-	-	13.31	9.02	10.55
-1700	F07/F10	M8/M10	0.47/0.59	2.756/4.016	0.748	4.92	0.12	1.65	2.87	7.87	2.56	5.59	3.43	7.56	2.68	2.13	3.07	6.30	-	-	13.31	9.02	10.55
-2640	F10/F12	M10/M12	0.59/0.71	4.016/4.921	1.063	5.83	0.12	1.93	3.23	8.70	2.56	6.30	3.90	8.70	2.72	2.56	3.07	7.09	-	-	14.49	10.20	11.42
-4400	F10/F12	M10/M12	0.59/0.71	4.016/4.921	1.063	5.83	0.12	1.93	3.23	8.70	2.56	6.30	3.90	8.70	2.72	2.56	3.07	7.09	-	-	14.49	10.20	11.97
-5200	F10/F12	M10/M12	0.59/0.71	4.016/4.921	1.063	5.83	0.12	1.93	3.23	8.70	2.56	6.30	3.90	8.70	2.72	2.56	3.07	7.09	-	-	14.49	10.20	11.97
-6900	F14	M16	0.95	5.512	1.417	7.01	0.12	2.24	4.06	9.53	2.56	7.32	4.37	9.49	2.91	3.07	4.33	8.27	-	-	16.14	11.69	12.99
-10500	F14	M16	0.95	5.512	1.417	7.01	0.12	2.24	4.06	9.53	2.56	7.32	4.37	9.49	2.91	3.07	4.33	8.27	-	-	16.14	11.69	12.99
-17500	F16	M20	1.18	6.496	1.417	9.65	0.20	3.54	4.06	9.53	2.56	7.32	5.24	9.49	2.91	3.07	4.33	8.27	9.17	5.24	16.14	12.56	22.17
-25900	F16	M20	1.18	6.496	1.417	9.65	0.20	3.54	4.06	9.53	2.56	7.32	5.24	9.49	2.91	3.07	4.33	8.27	9.17	5.24	16.14	12.56	22.17

Wiring Connection

WE/XE-1350 thru 25900 *Two Position 115 VAC/1 Ph* SE 1080

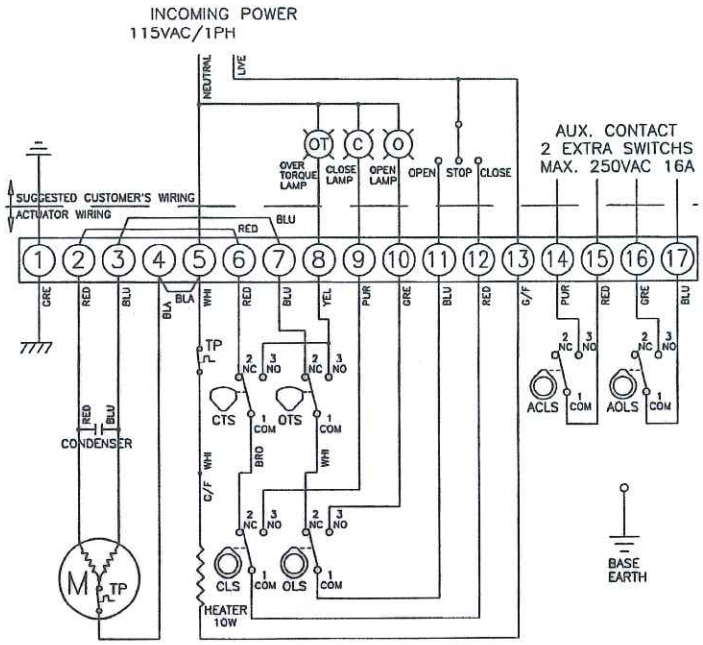

TORQUE AND LIMIT SWITCH OPERATION		
SWITCH	CLOSE ← INTERMEDIATE	→ OPEN
CLS 1-2		
CLS 1-3		
OLS 1-2		
OLS 1-3		
ACLS 1-2		
ACLS 1-3		
AOLS 1-2		
AOLS 1-3		
CTS 1-3	* CLOSING TORQUE SWITCH INTERRUPTS CONTROL IF MECHANICAL OVERLOAD OCCURS DURING CLOSING CYCLE	
OTS 1-3	* OPENING TORQUE SWITCH INTERRUPTS CONTROL IF MECHANICAL OVERLOAD OCCURS DURING OPENING CYCLE	

SYMBOL	DESCRIPTION	RATING
CLS	CLOSE LIMIT SWITCH	250VAC 10A
OLS	OPEN LIMIT SWITCH	250VAC 10A
CTS	CLOSE TORQUE SWITCH	250VAC 10A
OTS	OPEN TORQUE SWITCH	250VAC 10A
ACLS	AUX. CLOSE LIMIT SWITCH	250VAC 16A
AOLS	AUX. OPEN LIMIT SWITCH	250VAC 16A
TP	THERMAL PROTECTOR	250VAC 15A

*EACH ACTUATOR SHOULD BE POWERED THROUGH IT'S OWN INDIVIDUAL SWITCH OR RELAY CONTACTS TO PREVENT CROSS FEED BETWEEN TWO OR MORE ACTUATORS.

WEM/XEM-1350 thru 25900 *Proportional 115 VAC/1 Ph* SE 1052

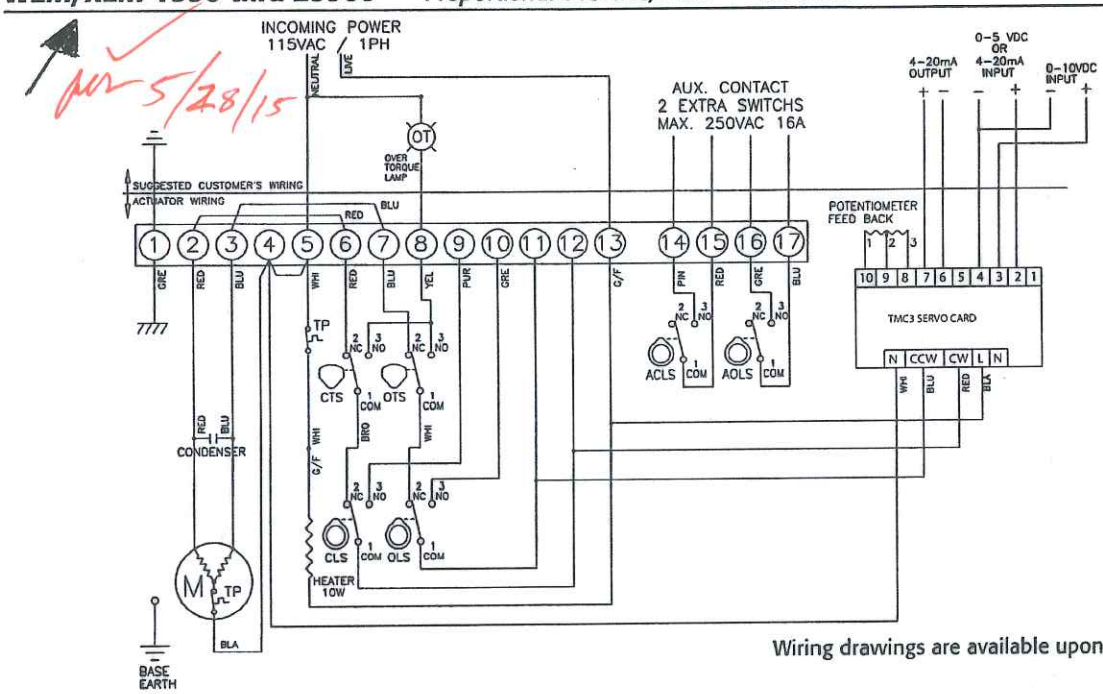

Wiring drawings are available upon request.

TRIAC CONTROLS

Triac WE / XE Series Part Number Reference

WEM-1700 XX

5/28/15

Model	
WE	Weather Proof, IP67, TYPE 4, 4X, 6
XE	Explosion Proof Design, ATEX & IECEx Ex d IIB T4, IP67
FE	Fire Proof Unit (1050°F for 50 Min)
SE	Submersible unit (IP68, 10 meters for 72 Hours)

Control	
Blank	(2) Position Control (Open / Close)
M	Standard Modulating Control Card (TMC3)
D	TDC-100 Modulating Card (Provides 450 points of resolution)
P	Profibus DP
R	Modbus (RS485)
L	Boiler Feed (4-20mA)
S	Boiler Feed (0-135ohm)

Actuator	
Size	
-350	350 In-Lbs
-350HS	270 In-Lbs
-500	500 In-Lbs
-690	690 In-Lbs
-1350	1350 In-Lbs
-1700	1700 In-Lbs
-2640	2640 In-Lbs
-4400	4400 In-Lbs
-5200	5200 In-Lbs
-6900	6900 In-Lbs
-10500	10500 In-Lbs
-17500	17500 In-Lbs
-25900	25900 In-Lbs
-53000	53000 In-Lbs
-80000	80000 In-Lbs

Motor		
X	115VAC/1PH	Place holder only - Omit when at end of part number
A	24V AC/DC	(N/A 4400 - 25900)
B	12VDC	
C	24VDC*	(N/A 4400 - 25900)
	*Requires additional relays for customer supplied wiring	
D	24VAC/1PH	(N/A 4400 - 25900)
E	220VAC/1PH	
F	220VAC/3PH	(N/A 500, 690)
G	380VAC/3PH	(N/A 500, 690)
H	440VAC/3PH	(N/A 500, 690)
J	460VAC/3PH	(N/A 500, 690)
K	480VAC/3PH	(N/A 500, 690)

Options		
X	No options Place holder only - Omit when at end of part number	
2	ADM-100 Control Board - 24 VDC On/Off	
B	Semi-integral Control Unit	(N/A 500, 690)
C	Intelligent Digital Control Unit	(N/A 500, 690)
D	Local / Remote Control Switches	(Only 500, 690)
E	Electronic Speed Control Module - 115 VAC only	
F	2 Wire Control & Speed Control - 115 VAC only	
G	End of travel time delay (same in both directions)	
HS1/HS2	See High Speed Options	
R	2 Wire Control, Relay - 115 VAC control voltage	
S	2 Wire Control, Relay - 24 VAC control voltage	
T	2 Wire Control, Relay - 24 VDC control voltage	

Miscellaneous Options Note: Add all miscellaneous options to end of part number		
Blank	No options	
T	4-20mA Transmitter	
N	1000 Ohm Potentiometer	
O	5000 Ohm Potentiometer	
P	10K Ohm Potentiometer	
X	120° Operation	(N/A 17500 or 25900)
Y	180° Operation	(N/A 17500 or 25900)
Z	270° Operation	(N/A 17500 or 25900)
L	-40° Low Temp Kit	
I	Position Indicator Lamps (Open, Close, Torque)	(N/A 500, 690)
S	(2) additional limit switches (6 total)	(N/A 500, 690)
	Floor Drive Mounting Configuration - See Floor Drive Catalog	

Examples

WEM-1350
(Weather Proof Housing, Modulating Control, model size 1350, 115VAC / 1PH)

WEM-1350XXT
(Weather Proof Housing, Modulating Control, model size 1350, 115VAC / 1PH, 4-20mA Transmitter)

AT Controls reserves the right to change product designs and technical/dimensional specifications without notice.

A-T Controls, Inc.

9955 International Blvd. PHONE (513) 247-5465
Cincinnati, Ohio 45246 FAX (513) 247-5462
www.atcontrols.com sales@atcontrols.com

WE-20150508
Copyright 2013 A-T Controls, Inc.
LIT0021

Simmons

CERTIFIED LEAD FREE Ductile Iron Check Valve

NSF/ANSI 372

- ASTM A536 Ductile iron body. • Silicon bronze poppet.
- Stainless steel spring and nut. • Non-toxic polyester powder coat paint.

Standard Stemmed Poppet Check Valve

Stemmed Part No.	Size	Wt.Ea. lbs.	Ctn Qty
653SB	1	1.3	1
654SB	1-1/4	1.7	1
655SB	1-1/2	2.1	1
680SB	2	3.5	1
669SB	2-1/2	15.3	1
670SB	3	11.7	1
681SB	3*	13.1	1
671SB	4	21.5	1
674SB	5	33.7	1
672SB	6	44.5	1
683SB	6*	60.2	1
673SB	8	63.7	1
689SB	10	110.0	1

* High Flow Design

Stemless Poppet Check Valve

Stemless Part No.	Size	Wt.Ea. lbs.	Ctn Qty
2653SB	1	1.3	1
2654SB	1-1/4	1.7	1
2655SB	1-1/2	2.1	1
2680SB	2	3.5	1
-	2-1/2	15.3	1
-	3	11.7	1
2681SB	3*	13.1	1
2671SB	4	21.5	1
2674SB	5	33.7	1
-	6	44.5	1
2683SB	6*	60.2	1
-	8	63.7	1
-	10	110.0	1

* High Flow Design

CERTIFIED LEAD FREE Ductile Iron Check Valve with Break-off Plug

NSF/ANSI 372

- 1/2" Break-off plug standard. • 3/8" Break-off plug optional.

Check Valve (with Break-off Plug)

Stemmed Part No.	Size	Wt.Ea. lbs.	Ctn Qty
668SB	2-1/2	15.3	1
675SB	3	12.3	1
685SB	3*	13.4	1
676SB	4	21.3	1
679SB	5	34.0	1
677SB	6	44.7	1
687SB	6*	60.4	1
678SB	8	64.0	1
690SB	10	110.3	1

* High Flow Design

Stemless Check Valve (with Break-off Plug)

Stemless Part No.	Size	Wt.Ea. lbs.	Ctn Qty
-	2-1/2	15.3	1
-	3	12.3	1
2685SB	3*	13.4	1
2676SB	4	21.3	1
2679SB	5	34.0	1
-	6	44.7	1
2687SB	6*	60.4	1
-	8	64.0	1
-	10	110.3	1

* High Flow Design

CERTIFIED LEAD FREE Break-off Plug Only

- 303 Stainless steel.
- The break-off plug, when manually broken, allows water to drain from drop pipe before removal of pump.

Part No.	Size	Total Length	Wt.Ea. lbs.	Carton Quantity
4061	1/2	3.12	.5	1
4068	3/8	3.0	.4	1
4069**	1/2	6.0	.8	1

** For 8 & 10" Valves

*Silicon bronze components contain less than .05% (1/20 of 1%) Lead.

Check Valves furnished with Buna-N O-Ring, stainless steel spring, stainless steel washer, and stainless steel locknut. All valves 3/4" through 1-1/2" have a working pressure of 400 psi. All valves 2" and larger have a working pressure of 600 psi.

MADE IN U.S.A.

ASHCROFT®
Trust the shield.™

CI Series Bimetal Thermometers

TI 3001 Dial Thermometer

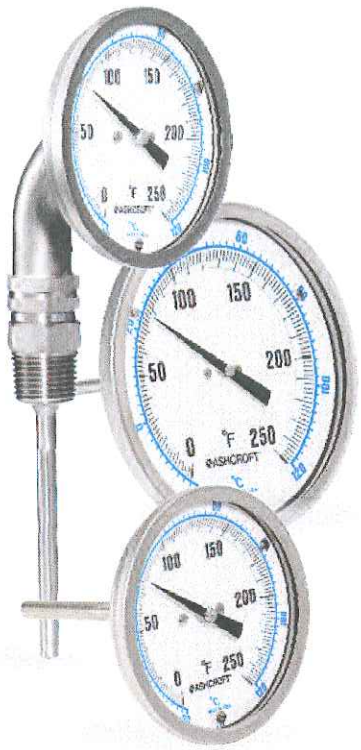

FEATURES

- *1% full span accuracy ASME B40.200 (ASME B40.3 Grade A)*
- *Maximum ambient temp. is 200°F (94°C)*
- *Hermetically sealed case to prevent entry of moisture, interior corrosion and coil freeze-up.*
- *Tamper resistant.*
- *Maxivison® dial allows readability from any angle without parallax error.*
- *Silicone coil dampening (up to 400°F) provides vibration dampening and improves response time.*
- *All-welded stainless steel construction*
- *Heavy-Duty glass lens*
- *Protection IP 65*
- *Five year limited warranty*

MADE IN THE USA

RoHS 2002/95/EC Compliant

SPECIFICATIONS

Ashcroft® Series:	CI
Dial Sizes:	2,″3,″5″
Stem Length:	2½″-24″ (1)
Case & Stem:	304 stainless steel, hermetically sealed
Stem Dia:	.250″
Window:	Heavy-duty glass, plastic or shatter-proof glass optional
Dial:	Maxivision®, black figures on white background
Pointer:	Black
Connection:	Plain, pointed plain, ¼ NPT, ½ NPT
Connection Location:	Lower, Rear
Ranges:	–80/120°F-200/1000°F –50/50°C-100/500°C

Options:

Code	Description
C4	Individual calibration cert.
XCS	Dual scale (2)
XDM	Dial marking
XNH	Stainless steel tag
XNN	Paper tag
XPD	Plastic window
XSG	Shatter proof glass
X3B	⅜″ stem dia. with ½ NPT
X02	¼ NPT when ½ NPT is standard (3)
XS1	Silicone free

(1) Special or longer length available, consult factory
(2) Dual scale avilable with 3″ and 5″ case only
(3) Only available on rear connection

Thermowells must be used on all pressure or velocity applications, to protect the stem of thermometer from corrosion and physical damage, and to facilitate removal of the thermometer without disturbing the process. Maximum ambient temperature is 200°F (95°C).

ACL 5/7/15

Ashcroft Part Number:
30CI60R 025 0/250F

HOW TO ORDER

30 CI 60 R 040 0/250°F XNH

Dial Size: 3″ Code 30
Case Style: CI
Stem Connection: ½ NPT Code 60
Stem Location: Rear Code R
Stem Length: 4″ Code 040
Range: Code 0/250°F
Options: Stainless steel tag

ISO 9001
REGISTERED FIRM
BULLETIN BM-CI

All specifications are subject to change without notice.
All sales subject to standard terms and conditions.
© 2014 Ashcroft Inc. Rev. 07/14

Ashcroft Inc., 250 East Main Street, Stratford, CT 06614 USA
Tel: 203-378-8281 • Fax: 203-385-0408
email: info@ashcroft.com • www.ashcroft.com

ASHCROFT®
Trust the shield.™

ass 5/7/15

CI Series Bimetal Thermometers

CI Series selection table

Case Dial	Case Size Code	Style Code	Stem Conn.	Stem Code	Stem Location	Stem Lengths Available Code	"S" Length (inches)	Stem Lengths Available Code	Temperature Range °F* Fahrenheit	°/Div.	Fig. Inter.	°C Celsius	°/Div.	Fig. Inter.
2″	20	CI	Plain	40	Rear	R	2½	025	−80/120	2	20	−50/50	1	10
			Pointed	50					−20/120††			−20/120	2	20
			¼ NPT	60					30/130††	1	10	0/50††	1	5
3″	30		½ NPT	60	Rear	R	4	040	0/200	2	20	0/100	1	10
							6	060						
					Lower	L	9	090	0/250		50	10/150	2	20
							12	120	50/300			0/200		
5″	50		½ NPT	60	Rear	R	15	150	50/400	5	50	0/300††	5	50
							18	180	50/550			50/450**†		
							24	240	200/700†			100/500**†		
					Lower	L			100/800†					
									200/1000**†	10	100			

CI Series dual scale ranges

Dual scales are available in 3″ and 5″ dial sizes in the following ranges:

Inner		Outer
−80/120°F	and	−60/50°C
−40/120°F	and	−40/50°C
−40/160°F	and	−40/70°C
−20/120°F	and	−30/50°C††
0/200°F	and	−20/90°C
0/250°F	and	−20/120°C
30/130°F	and	0/55°C††
50/300°F	and	10/150°C
50/400°F	and	10/200°C
50/550°F	and	10/290°C
100/800°F	and	50/400°C†
200/700°F	and	100/370°C†
200/1000°F	and	100/550°C**†

CI Dimensions

Case Series	Dial Size	Connection Location	A	B	C	D	E	S	NPT	Hex	Weight in ounces[3] S – 2½″
CI	2″	Rear (Plain)	2 33/32 (53)	3/8 (10)	3/8 (8)	–	–	–[2]	–	11/16	4½
CI	2″	Rear (Plain, pointed stem)	2 33/32 (53)	3/8 (10)	5/16 (8)	–	–	–[2]	–	11/16	4½
CI	2″	Rear (Threaded)	2 33/32 (53)	3/8 (10)	3/8 (8)	–	–	–[2]	¼	11/16	4½
CI	3″	Rear	3 5/32 (80)	19/32 (15)	3/8 (8)	–	–	–[2]	½	⅞	7
CI	3″	Lower	3 5/32 (80)	1 27/32 (47)	–	2⅝ (67)	¼ (6)	–[2]	½	⅞	11
CI	5″	Rear	5 1/32 (128)	23/32 (18)	3/8 (8)	–	–	–[2]	½	⅞	16
CI	5″	Lower	5 1/32 (128)	1 15/16 (49)	–	3⅝ (92)	¼ (6)	–[2]	½	⅞	26

Overtemperature limits

Top of Range °F	Maximum Over Temperature
up to 250	100% of span
251/550	50% of span
551/1000	800°F **

*Dual scale ranges available for all standard °F ranges (3″ and 5″ case only)
**Satisfactory for continuous service up to 800°F or 425°C. Can be used for intermittent service from 800 to 1000°F, or 425 to 500°C. Use Ashcroft Duratemp® thermometers for ranges above and below those listed above.
†Minimum stem length for these ranges is 4″.
††Minimum stem length for lower connection is 4″.

NOTES:
1. Figures in parenthesis ( ) are in millimeters. All other dimensions are in inches.
2. Standard "S" dimensions are 2½, 4, 6, 9, 12, 15, 18 and 24 inches. Standard stem diameter is ¼ inch.
3. Add 1 oz. for every 2 inches of stem length.

DIMENSIONS

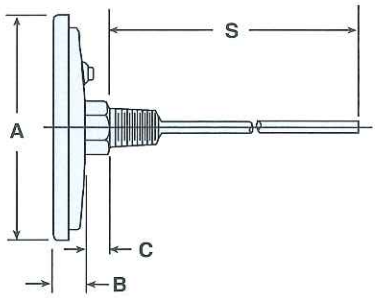

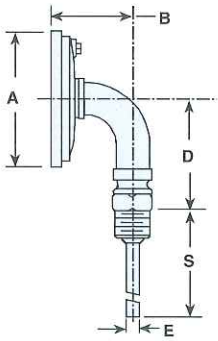

All specifications are subject to change without notice.
All sales subject to standard terms and conditions.
© 2014 Ashcroft Inc. Rev. 07/14

Ashcroft Inc., 250 East Main Street, Stratford, CT 06614 USA
Tel: 203-378-8281 • Fax: 203-385-0408
email: info@ashcroft.com • www.ashcroft.com

Bourdon Tube Pressure Gauges
Stainless Steel Series
Type 232.53 - Dry Case
Type 233.53 - Liquid-filled Case

AW 5/28/15

0-160 PSI RANGE

Part #: 52495728 (233.53 2 100PSI 1/4 B)

Applications

- With liquid filled case for applications with high dynamic pressure pulsations or vibration
- Suitable for corrosive environments and gaseous or liquid media that will not obstruct the pressure system
- Process industry: chemical/petrochemical, power stations, mining, on and offshore, environmental technology, mechanical engineering and plant construction

Special features

- Excellent load-cycle stability and shock resistance
- All stainless steel construction
- Positive pressure ranges to 15,000 psi

Bourdon Tube Pressure Gauge Model 232.53

Standard Features

Design
ASME B40.100 & EN 837-1

Sizes
2", 2½" & 4" (50, 63 and 100 mm)

Accuracy class
2" & 2½": ± 2/1/2% of span (ASME B40.100 Grade A)
4": ± 1.0% of span (ASME B40.100 Grade 1A)

Ranges
Vacuum / compound to 200 psi
Pressure from 15 psi to 15,000 psi 0 - 160 psi
or other equivalent units of pressure or vacuum

Working pressure

2" & 2½":	Steady:	3/4 scale value
	Fluctuating:	2/3 full scale value
	Short time:	full scale value
4 ":	Steady:	full scale value
	Fluctuating:	0.9 x full scale value
	Short time:	1.3 x full scale value

Operating temperature
Ambient: -40°F to +140°F (-40°C to +60°C) - dry
-4°F to +140°F (-20°C to +60°C) - glycerine filled
-40°F to +140°F (-40°C to +60°C) - silicone filled
Medium: +212°F (+100°C) maximum

Temperature error
Additional error when temperature changes from reference temperature of 68°F (20°C) ±0.4% for every 18°F (10°C) rising or falling. Percentage of span.

Weather protection
Weather tight (NEMA 4X / IP65)

Pressure connection
Material: 316L stainless steel
Lower mount (LM) or center back mount (CBM)
Lower back mount (LBM) for 4" size
1/8" NPT, 1/4" NPT or 1/2" NPT limited to wrench flat area

Bourdon tube
Material: 316L stainless steel

2" & 2½":	≤ 1,000 PSI: C-type,
	≥ 1,500 PSI: helical type
4":	≤ 1,500 PSI: C-type,
	≥ 2,000 PSI: helical type

Movement
Stainless steel

Dial
White aluminum with black lettering, 2" and 2½" with stop pin

WIKA®
Part of your business

Pointer
Black aluminum

Case
304 stainless steel with vent plug and SS crimp ring
Welded case / socket connection

Window
Polycarbonate

Liquid filling
Glycerine 99.7% - Type 233.53

Optional extras

- SS restrictor
- SS front flange
- SS rear flange (2½" and 4" only)
- Zinc-plated steel or SS u-clamp bracket (field installable - see note)
- Cleaned for oxygen service
- Red drag pointer or mark pointer (2½" and 4" only)
- External zero adjustment (4" size only)
- Other pressure connections
- Silicone or Fluorolube case filling
- Other pressure scales available: bar, kPa, MPa, kg/cm² and dual scales

Note: U-clamp bracket for 2" must be ordered with gauge

Dimensions

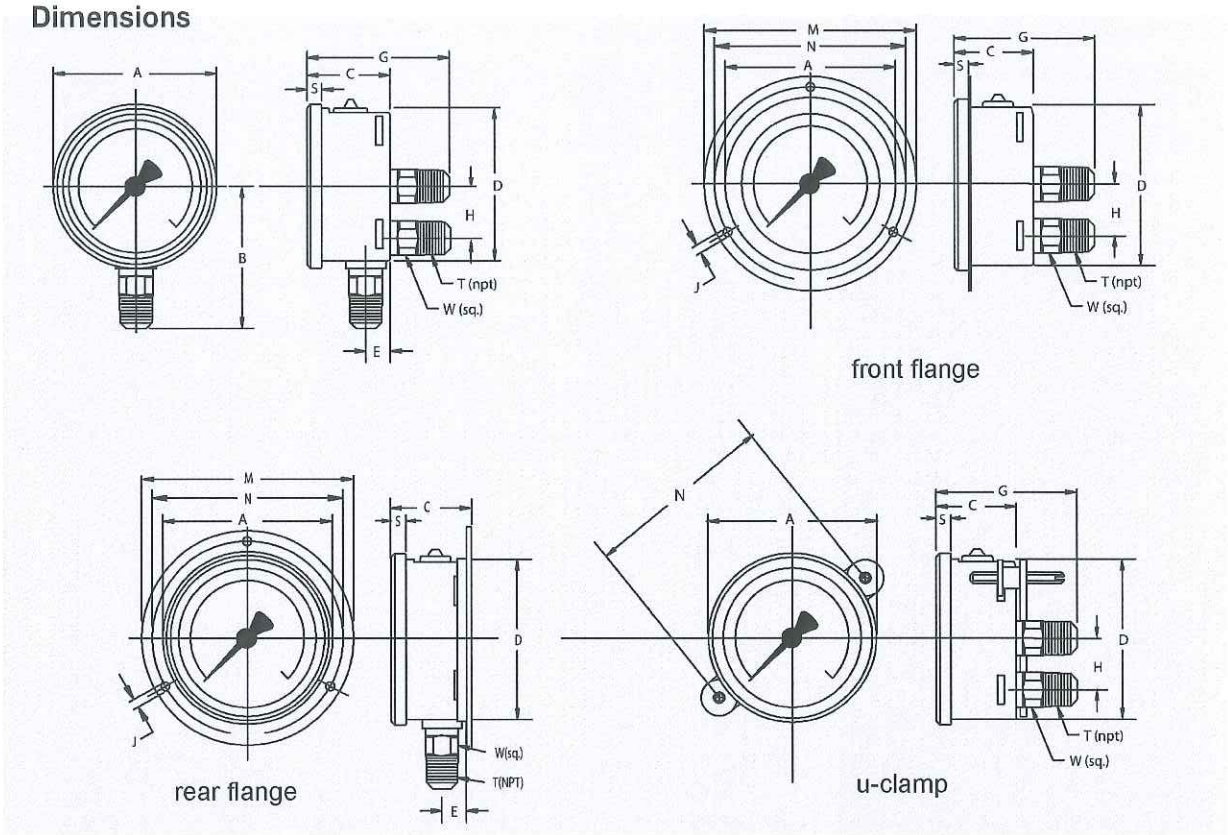

Size		A	B	C	D	E	G	H	J	M	N	S	T	W	Weight
2"	mm	55	48	30	50	12	53	-	3.6	71	60	5.5		14	0.27 lb. dry
	in	2.17	1.89	1.18	1.97	0.47	2.09	-	0.14	2.80	2.36	0.22	1/4"	0.55	0.33 lb. filled
2.5"	mm	69	54	32	62	13	54	-	3.6	88.1	75	6.5		14	0.36 lb. dry
	in	2.69	2.13	1.26	2.45	0.51	2.13	-	0.14	3.47	2.95	0.26	1/4"	0.55	0.44 lb. filled
4"	mm	107	87	48	100	15.5	79.5	30	4.8	132	116	8		22	1.10 lb. dry
	in	4.21	3.43	1.89	3.91	0.61	3.13	1.18	0.19	5.20	4.57	0.31	1/2"	0.87	1.76 lb. filled

Recommended panel cutout is dimension D + 1 mm

WIKA Datasheet 23X.53 05/2009

Ordering information
Pressure gauge model / Nominal size / Scale range / Size of connection / Optional extras required
Specifications and dimensions given in this leaflet represent the state of engineering at the time of printing.
Modifications may take place and materials specified may be replaced by others without prior notice.

WIKA Instrument Corporation
1000 Wiegand Boulevard
Lawrenceville, GA 30043
Tel (770) 513-8200 Toll-free 1-888-WIKA-USA
Fax (770) 338-5118
E-Mail info@wika.com
www.wika.com

ARV Numerous air vacuum relief valves

ar 5/6/15

COMBINATION AIR VALVES (SINGLE BODY TYPE)

MODEL NOS. 201C.2 - 202C.2 - 203C.2 - 204C.2

STANDARD MATERIALS OF CONSTRUCTION

PART NO.	PART NAME	MATERIAL
1	BODY	CAST IRON ASTM A126, CLASS B
2	COVER	CAST IRON ASTM A126, CLASS B
3	BAFFLE	CAST IRON ASTM A126, CLASS B
4	SEAT	BUNA-N
5	FLOAT	STAINLESS STEEL T316, ASTM A240
6	GASKET	COMPRESSED NON-ASBESTOS FIBER
7	COVER BOLT	ALLOY STEEL SAE, GRADE 5
8	RETAINING SCREWS	STAINLESS STEEL T316, ASTM F593
9	GUIDE BUSHING	STAINLESS STEEL T316, ASTM A240
10	FLOAT ARM	STAINLESS STEEL T316, ASTM A240
11	ORIFICE BUTTON	STAINLESS STEEL & BUNA-N
12	PIVOT PIN	STAINLESS STEEL T316, ASTM A276
13	RETAINING RING	STAINLESS STEEL PH 15-7 MO
14	PIPE PLUG	STEEL
15	CUSHION	BUNA-N
16	PLUG	STAINLESS STEEL T316, ASTM A276
17	FLOAT RETAINER	STAINLESS STEEL T316, ASTM F880
18	LOCK NUT	STAINLESS STEEL T316, ASTM F594
29	CUSHION RETAINER	STAINLESS STEEL T316, ASTM F593
30	WASHER	STAINLESS STEEL T316, ASTM A240
34	LOCK WASHER	STAINLESS STEEL T316, ASTM A240

NOTE: ALL SPECIFICATIONS AS LAST REVISED.

Revised 1-29-03

MATERIALS OF CONSTRUCTION	DATE 2/2/69
VAL-MATIC® VALVE AND MANUFACTURING CORP.	DRWG. NO. VM-201C-M

ABL 5/6/15

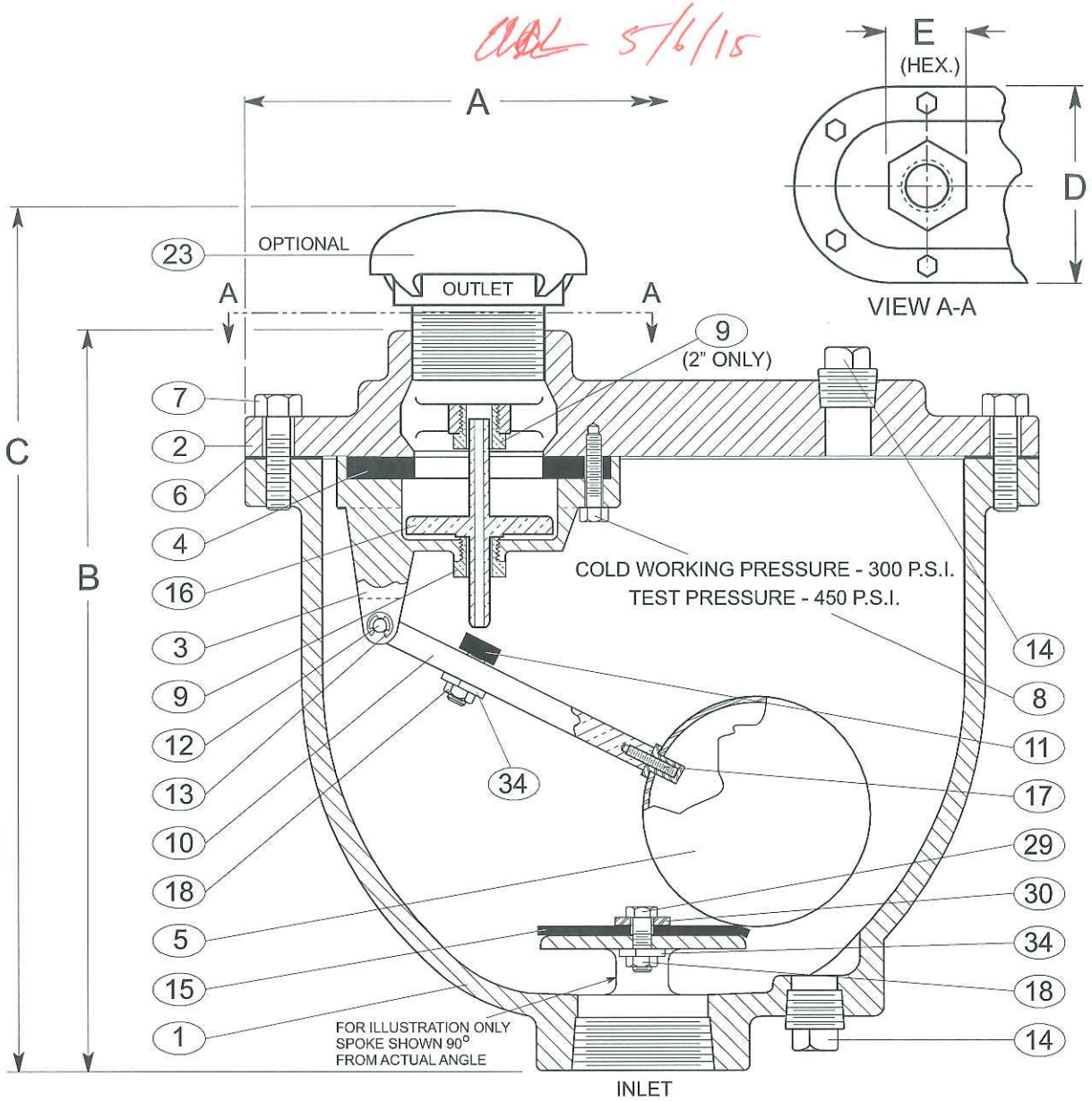

1	BODY	5	FLOAT	9	BUSHING	13	RETAINING RING	18	LOCK NUT
2	COVER	6	GASKET	10	FLOAT ARM	14	PIPE PLUG	23	SCREENED HOOD
3	BAFFLE	7	COVER BOLTS	11	ORIFICE BUTTON	15	CUSHION	29	CUSHION RETAINER
4	SEAT	8	RETAINING SCREWS	12	PIVOT PIN	16	PLUG	30	WASHER
						17	FLOAT RETAINER	34	LOCK WASHER

SEE DRAWING NO. VM-201C-M FOR STANDARD MATERIALS OF CONSTRUCTION.

VALVE SIZE	MODEL NO.*	A	B	C	D	E	INLET SIZE	OUTLET SIZE	ORIFICE SIZE
1"	201C.2	11 3/8"	10 1/2"	12 5/8"	6 3/8"	2"	1" N.P.T.	1" N.P.T.	5/64"
2"	202C.2	14"	13"	15 7/8"	8 1/4"	3 1/4"	2" N.P.T.	2" N.P.T.	3/32"

*Add "H" to Model No. for optional screened hood SPK-1H.

Revised 1-9-06

COMBINATION AIR VALVE (SINGLE BODY TYPE)	DATE 2-2-69
VAL-MATIC® VALVE AND MANUFACTURING CORP.	DRWG. NO. VM-201C

P -101, Well pump
for KAFB-106228

pr 4/30/15

13B63616 150S300-16 60 Hz

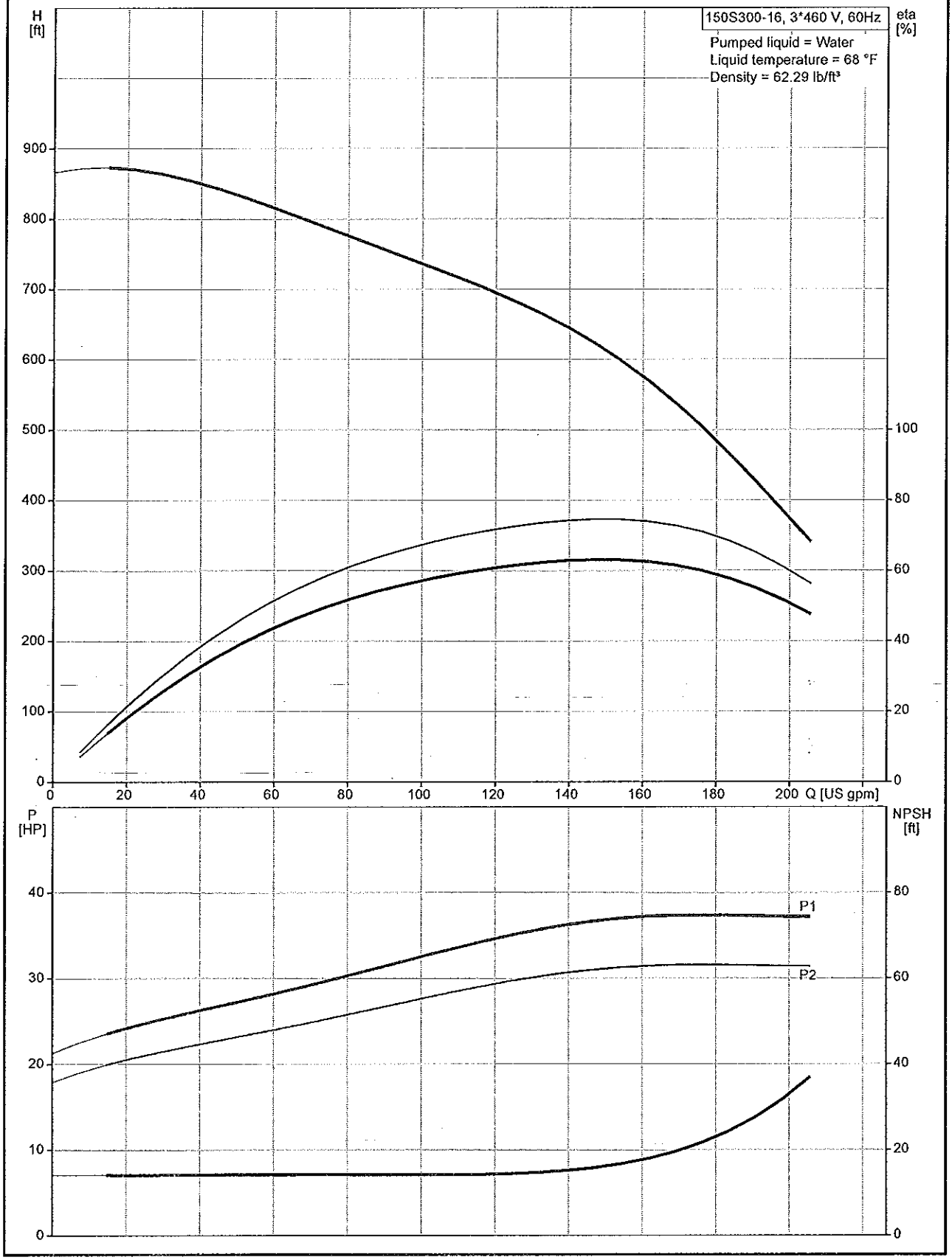

AKL 4/30/15

Description	Value
General information:	
Product name:	150S300-16
Position	
Product No.:	13B63616
EAN:	5700391427961
Price:	$ 0.00
Technical:	
Speed for pump data:	3450 rpm
Rated flow:	159 US gpm
Flow range:	20 .. 206 US gpm
Max flow:	206 US gpm
Rated head:	568 ft
Shaft seal for motor:	SIC/SICNBR
Curve tolerance:	ISO9906:2012 3B
Stages:	16
Model:	A
Valve:	pump with built-in non-return valve
Materials:	
Pump:	Stainless steel
	DIN W.-Nr. 1.4301
	AISI 304
Impeller:	Stainless steel
	DIN W.-Nr. 1.4301
	AISI 304
Motor:	Stainless steel
	DIN W.-Nr. 1.4301
	AISI 304
Installation:	
Maximum ambient pressure:	870 psi
Pump outlet:	3"NPT
Motor diameter:	6 inch
Liquid:	
Max liquid temperature at 0.15 m/sec:	116.6 °F
Electrical data:	
Motor type:	MS6000
Rated power - P2:	30 HP
KVA code:	J
Main frequency:	60 Hz
Rated voltage:	3 x 440-460-480 V
Start. method:	direct-on-line
Starter:	2 1/2
Service factor:	1.15
Rated current:	48.0-46.0-45.0 A
Starting current:	237 A
Cos phi - power factor:	0.87-0.85-0.83
Rated speed:	3450-3470-3480 rpm
Axial load max:	6170 lb
Motor efficiency at full load:	85,0 %
Enclosure class (IEC 34-5):	IP68
Insulation class (IEC 85):	F
Motor protection:	NONE
Thermal protec:	external
Built-in temperature transmitter:	yes
Motor Number:	96166168
Motor to order:	96166168
Cable number:	96163476
Controls:	
Heather:	K76
Others:	

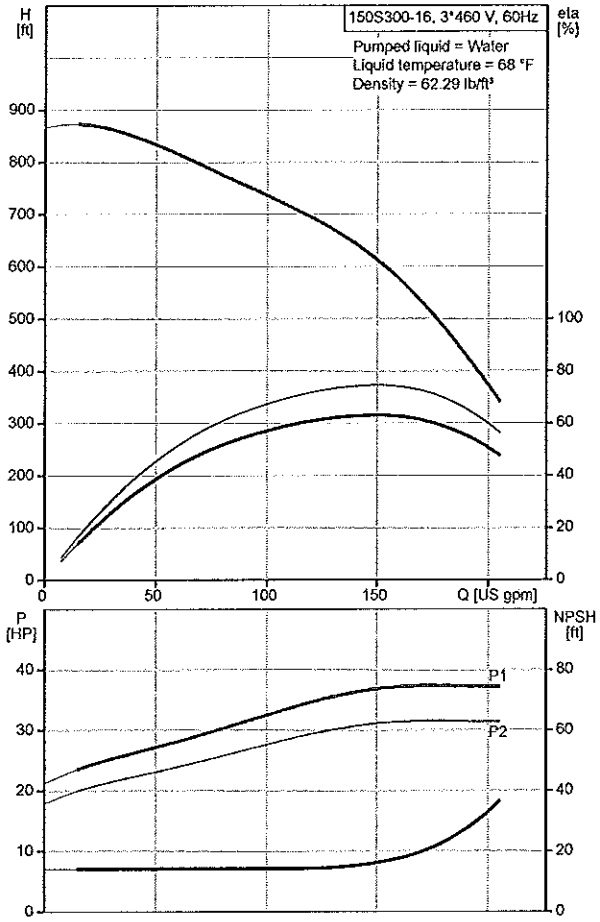

GAL 7/30/15

Description	Value
Net weight:	234 lb
Gross weight:	313 lb
Sales region:	Namreg

Acc 4/30/15

13B63616 150S300-16 60 Hz

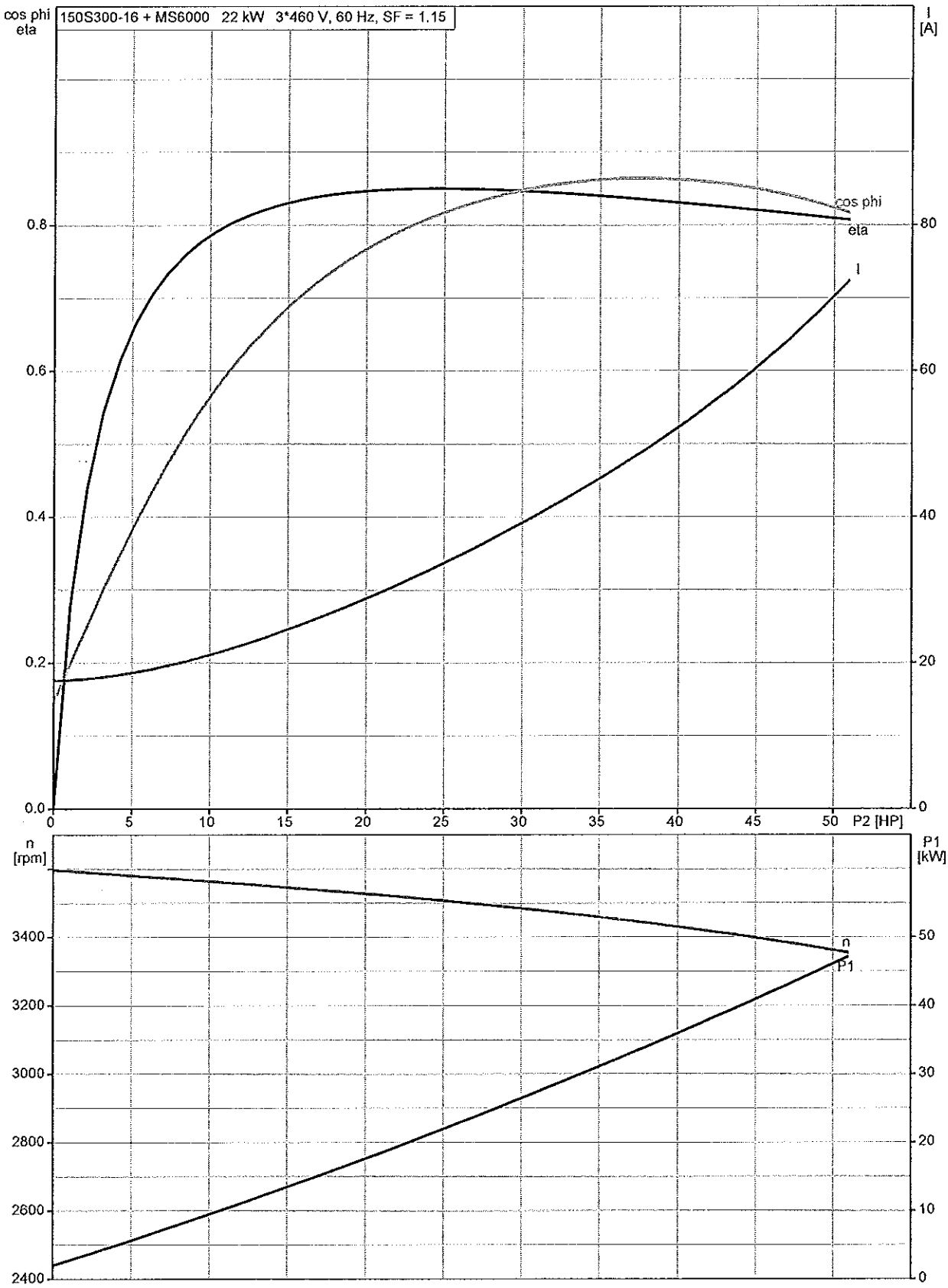

Ocs 4/30/15

13B63616 150S300-16 60 Hz

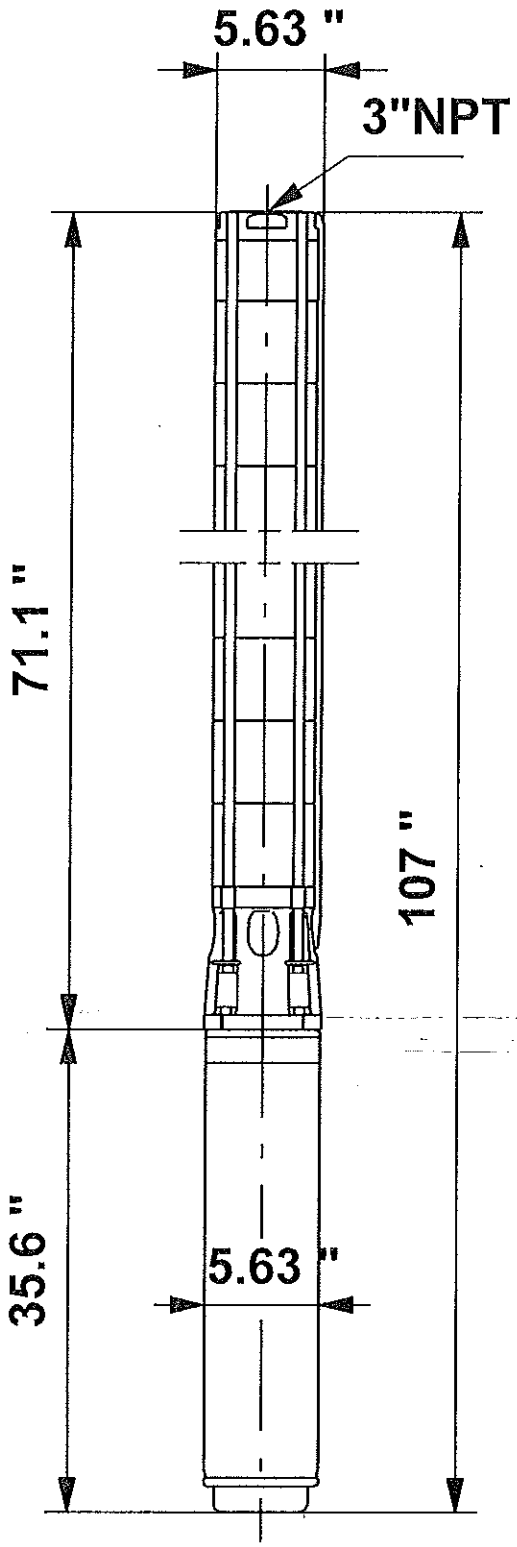

Note! All units are in [mm] unless otherwise stated.
Disclaimer: This simplified dimensional drawing does not show all details.

9/30/15

13B63616 150S300-16 60 Hz

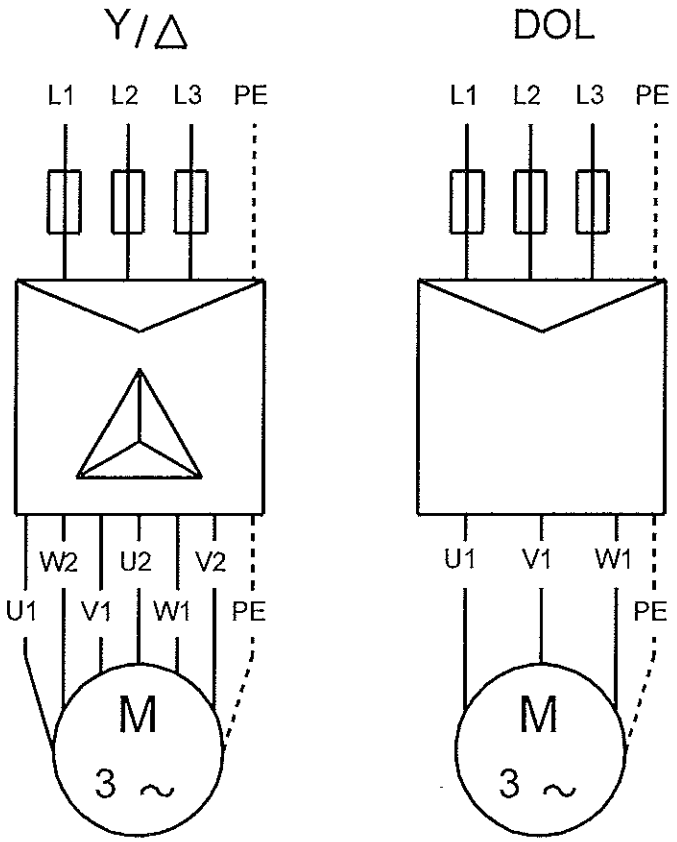

U1, W2	Brown
V1, U2	Black
W1, V2	Grey

All units are [mm] unless otherwise presented.

Cal 4/30/15

LIMITED WARRANTY

Products manufactured by GRUNDFOS PUMPS CORPORATION (GRUNDFOS) are warranted to the original user only to be free of defects in material and workmanship for a period of 24 months from date of installation, but not more than 30 months from date of manufacture. GRUNDFOS' liability under this warranty shall be limited to repairing or replacing at GRUNDFOS' option, without charge, F.O.B. GRUNDFOS' factory or authorized service station, any product of GRUNDFOS' manufacture. GRUNDFOS will not be liable for any costs of removal, installation, transportation, or any other charges which may arise in connection with a warranty claim. Products which are sold but not manufactured by GRUNDFOS are subject to the warranty provided by the manufacturer of said products and not by GRUNDFOS' warranty. GRUNDFOS will not be liable for damage or wear to products caused by abnormal operating conditions, accident, abuse, misuse, unauthorized alteration or repair, or if the product was not installed in accordance with GRUNDFOS' printed installation and operating instructions.

To obtain service under this warranty, the defective product must be returned to the distributor or dealer of GRUNDFOS' products from which it was purchased together with proof of purchase and installation date, failure date, and supporting installation data. Unless otherwise provided, the distributor or dealer will contact GRUNDFOS or an authorized service station for instructions. Any defective product to be returned to GRUNDFOS or a service station must be sent freight prepaid; documentation supporting the warranty claim and/or a Return Material Authorization must be included if so instructed.

GRUNDFOS WILL NOT BE LIABLE FOR ANY INCIDENTAL OR CONSEQUENTIAL DAMAGES, LOSSES, OR EXPENSES ARISING FROM INSTALLATION, USE, OR ANY OTHER CAUSES. THERE ARE NO EXPRESS OR IMPLIED WARRANTIES, INCLUDING MERCHANTABILITY OR FITNESS FOR A PARTICULAR PURPOSE, WHICH EXTEND BEYOND THOSE WARRANTIES DESCRIBED OR REFERRED TO ABOVE.

Some jurisdictions do not allow the exclusion or limitation of incidental or consequential damages and some jurisdictions do not allow limitations on how long implied warranties may last. Therefore, the above limitations or exclusions may not apply to you. This warranty gives you specific legal rights and you may also have other rights which vary from jurisdiction to jurisdiction.

ISO 9001 CERTIFIED

L-CP-TL-003	Rev. 05/04
Printed in USA	

Grundfos Pumps Corporation
17100 W. 118th Terrace
Olathe, KS 66061
Telephone 913 227 3400
Fax: 913 227 3500

www.grundfos.com

Grundfos Canada, Inc.
2941 Brighton Road
Oakville, Ontario L6H 6C9 Canada
Telephone: 905 829 9533
Fax: 905 829 9512

Bombas Grundfos de Mexico, S.A. de C.V.
Boulevard TLC #15
Parque Stiva Aeropuerto
Apodaca, N.L. 66600 Mexico
Telephone: 52 81 8144 4000
Fax: 52 81 8144 4010

GRUNDFOS

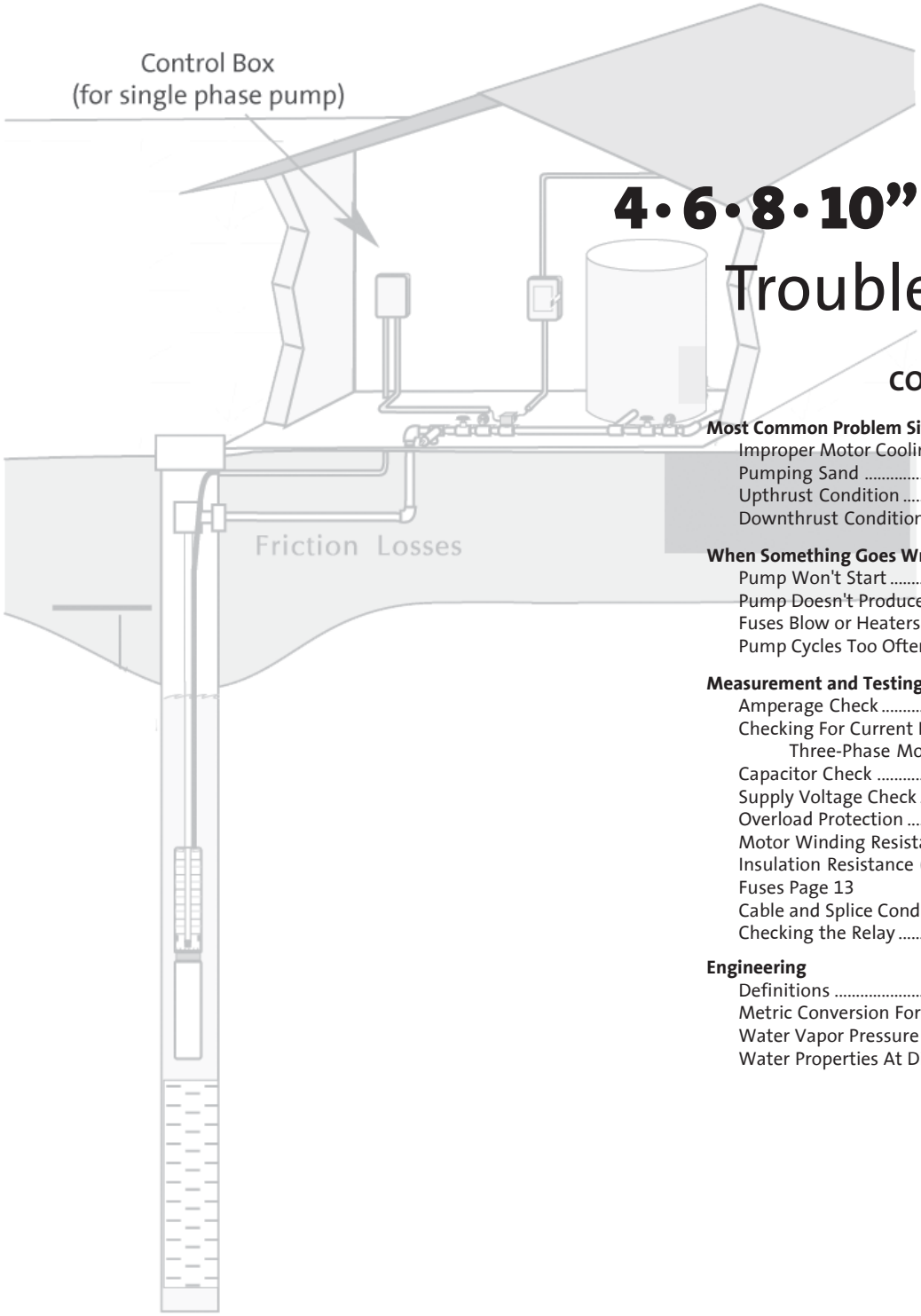

4•6•8•10" Submersibles
Troubleshooting

CONTENTS

Most Common Problem Situations
- Improper Motor Cooling ..... Page 2
- Pumping Sand ..... Page 3
- Upthrust Condition ..... Page 4
- Downthrust Condition ..... Page 5

When Something Goes Wrong . . .
- Pump Won't Start ..... Page 6
- Pump Doesn't Produce Enough Flow (GPM) ..... Page 6
- Fuses Blow or Heaters Trip ..... Page 8
- Pump Cycles Too Often ..... Page 8

Measurement and Testing
- Amperage Check ..... Page 10
- Checking For Current Imbalance On Three-Phase Motors ..... Page 10
- Capacitor Check ..... Page 11
- Supply Voltage Check ..... Page 11
- Overload Protection ..... Page 12
- Motor Winding Resistance (lead-to-lead) ..... Page 12
- Insulation Resistance (lead-to-ground) ..... Page 13
- Fuses Page 13
- Cable and Splice Condition ..... Page 14
- Checking the Relay ..... Page 14

Engineering
- Definitions ..... Page 15
- Metric Conversion Formulas ..... Page 16
- Water Vapor Pressure and Specific Gravity ..... Page 17
- Water Properties At Different Altitudes ..... Page 18

Most Common Problem Situations

Poor Motor Cooling*

A submersible pump motor is cooled by the flow of water past its outer housing as the pump is pumping. The water must flow past the motor at a certain velocity for proper cooling to take place, and the minimum velocity needed is different for each diameter motor.

MINIMUM VELOCITY OF WATER PAST MOTOR*

4" diameter motor ..... .25 feet per second
6" diameter motor ..... .5 feet per second
8" diameter motor ..... .5 feet per second
10" diameter motor ..... .5 feet per second

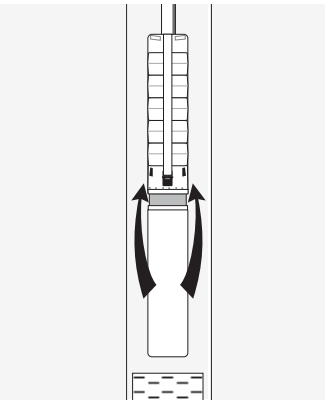

Correct screen position for proper cooling

To determine whether water is flowing past the motor at a high enough velocity, note where the motor diameter and outside sleeve or casing diameter intersect on the following chart. The Gallons Per Minute scale indicates the **minimum flow required** to keep the motor properly cooled.

MINIMUM FLOW REQUIREMENTS FOR SUBMERSIBLE MOTORS*

WELL CASING OR FLOW INDUCER SLEEVE (internal diameter in inches)	4" motor	6" motor	8" motor	10" motor	MOTOR DIAMETER
4 inches	1.2 GPM	--	--	--	MINIMUM FLOW (GPM) (to ensure proper motor cooling)
5	7	--	--	--	
6	13	10	--	--	
7	21	28	--	--	
8	30	45	10	--	
10	--	85	55	30	
12	--	140	110	85	
14	--	198	180	145	
16	--	275	255	220	
18	--	--	--	305	

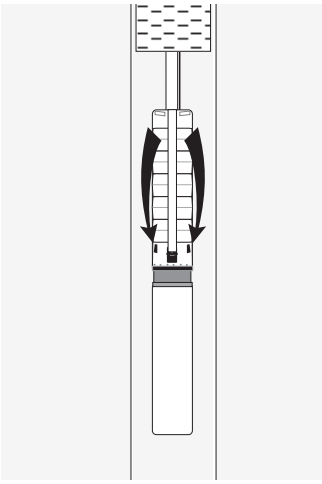

Cascading water from screen does not flow past motor

Insufficient cooling can sometimes result when:

(1) The screen is located above or at the pump, so that the water cascades down into the pump's suction intake without first flowing past the motor.

(2) The casing diameter is so large that the water is drawn into the pump's suction intake from the side without first flowing past the motor.

These problems can be solved by fitting the pump and motor into a **Flow Inducer Sleeve.** This sleeve attaches to the pump and forces water to pass around it and enter the pump's suction intake from below the motor.

If the diameter of the well's casing is too small for a sleeve inducer, a rigid tube (usually 1/4" inside diameter) can be tapped into the discharge piping above the pump (but below any check valves) with the other end positioned below the motor and pointing upwards.

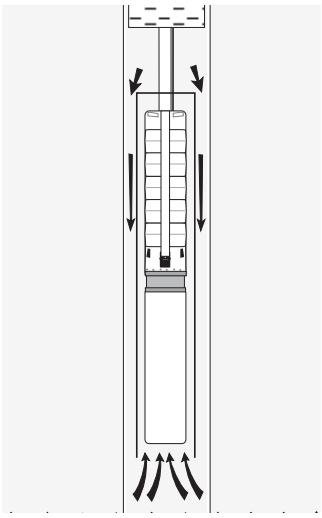

Flow Inducer Sleeve forces water past motor

***Grundfos motors have a more effective internal cooling design; therefore, a cooling sleeve is not required in water up to 30° C (86° F). However, all motors will have a longer life with a cooling sleeve installed.**

Pumping Sand

All submersible water pumps are designed with the idea they will be used to pump clean, clear water. Some design changes can be made to enable them to better handle situations that don't meet this ideal, but only to a limited degree.

No situation shortens the life of submersible pump more than pumping silt or **SAND**.

Effect On Pump	Will Be First Noticed By...	Design Changes To Deal With The Problem
SAND works its way into all moving parts of the pump, grinding bearings, impellers, and all other components as they spin against each other. 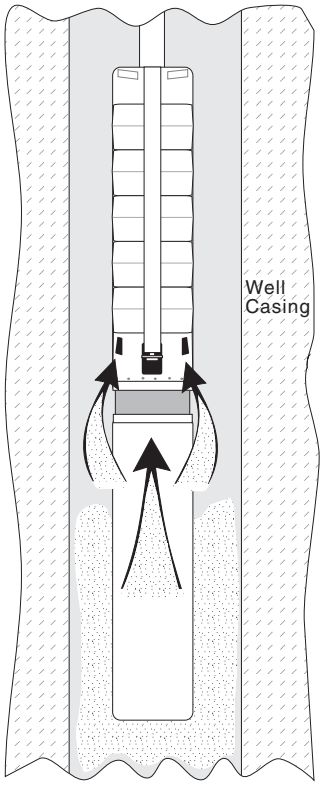 	Reduced flow (GPM) and head, since the perfect fit of the impellers and other components will be slowly worn away and the pump will become less and less efficient. 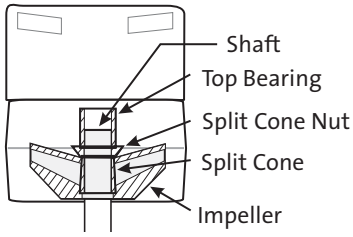 At some point, the pump's performance will become so poor it becomes quite apparent that something is seriously wrong. If the pump is pulled out of the well and the impellers and other moving components are examined, **uniform** wear (not random pitting, which might indicate that pump may have been cavitating) can be seen on virtually every moving part.	There is no way to eliminate all pump damage due to pumping sand. The effects can only be minimized. Since sand tends to be carried along with flow rates greater than 5-8 feet per second (water velocity), an enlarged drop pipe can reduce the water velocity and thereby reduce the chance sand can enter the pump. Of course, if the water velocity drops below the chart on the previous page, motor cooling may become a problem.

Upthrust Condition

Pumps are designed with the expectation that the correct size pump will be used in the right situation. An 80 gallon per minute pump which can produce about 600 feet of head (at the same time it delivers 80 GPM) is designed so that if it is used in this situation, the pump will operate at its best efficiency **and** all its components will have a long life. The perfomance curve to the right shows the most efficient operating range for this type of pump.

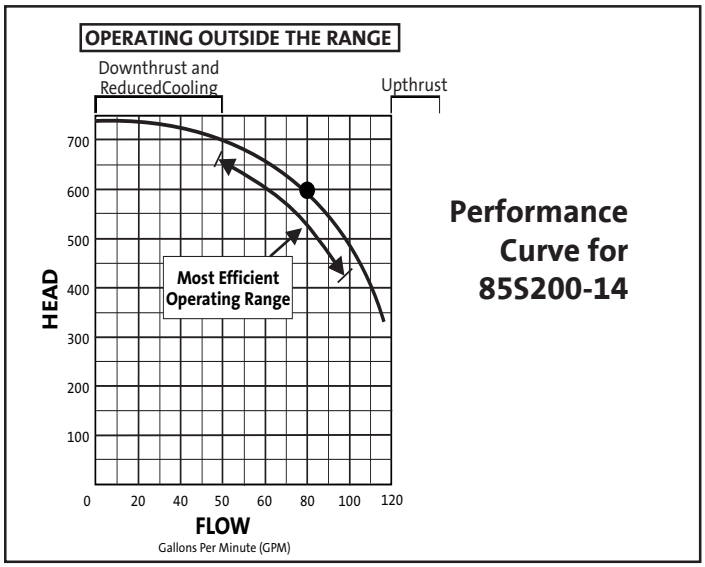

If the pump is not operated within this range, problems can occur.

One such problem can occur when a pump is installed and run in a situation in which it will produce far GREATER flow (GPM) than it was designed for. **In other words, the pump is oversized for what is really needed.** When such a pump is started, the initial thrust (upward water surge) generated by the spinning impellers is so much GREATER than the downward thrust it is expecting to overcome (such as the force of the different water pressure, the weight of the impellers and shaft, etc.), that the entire stack of impellers within the pump is lifted upwards **(UPTHRUST).** Pumps are manufactured with bearings designed to handle intermittent upward water surges up to a certain degree. If the actual flow is much greater than this, an upthrust condition exists. The force of this **UPTHRUST** will first put pressure on the motor's thrust bearing. If and when this bearing wears out, the pump's components will begin to absorb the upthrust as they grind against each other. Upthrust is especially damaging when the pump is started and the drop pipe is empty -- causing a great upthrust of water since no head is present. Check valves in the drop pipe will prevent this from occuring.

BEFORE
pump starts pumping

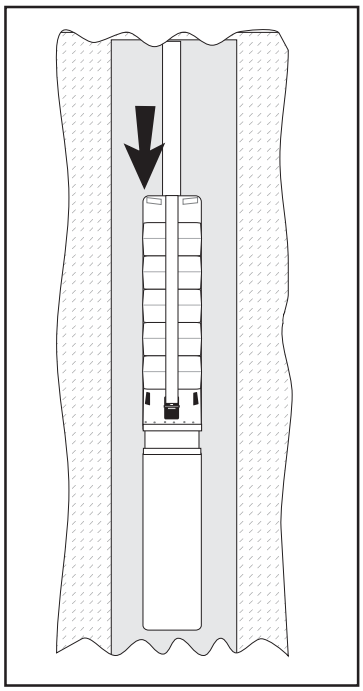

Weight of water and impellers pushes down

AFTER
pump starts pumping

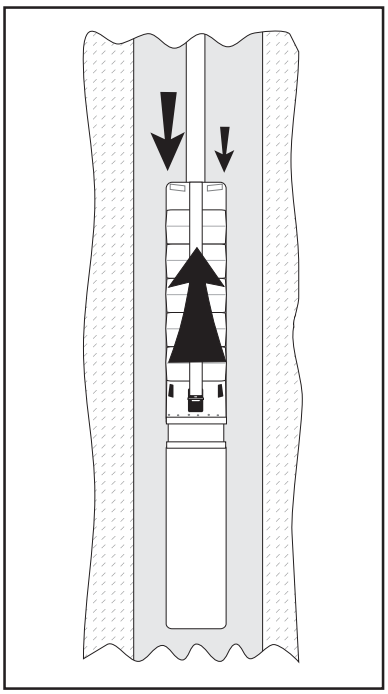

Initial surge of water thrusts impellers upwards

DAMAGE CAUSED

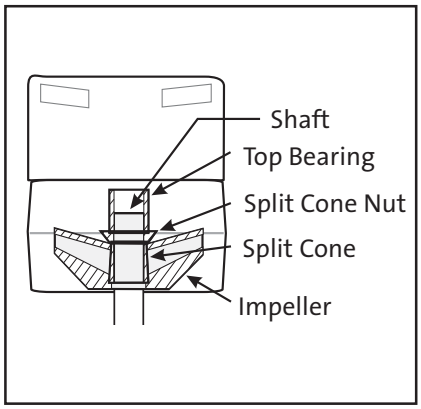

Once the motor's thrust bearing is worn, the pump components begin wearing

Usually, the **UPTHRUST** condition lasts for only a few seconds until the water pressure above the impellers acts as a counterforce to press the impeller stack down onto the motor shaft. Sometimes, however, if the pump is producing far more flow than for which it was designed, the upthrust condition can continue until the pump is stopped.

Downthrust Condition

Pumps are designed with the expectation that the correct size pump will be used in the right situation. An 80 gallon per minute pump which can produce about 600 feet of head (at the same time it delivers 80 GPM) is designed so that if it is used in this situation, the pump will operate at its best efficiency **and** all its components will have a long life. The perfomance curve at right shows the most efficient operating range for this type of pump.

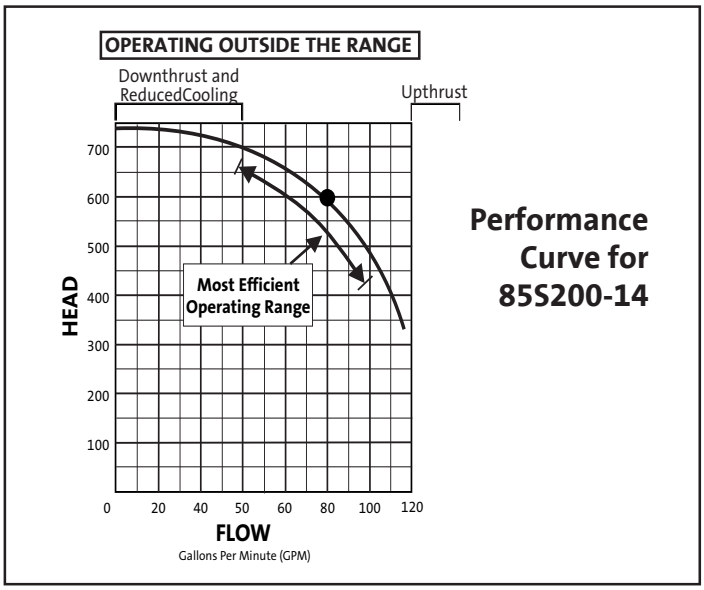

If the pump is not operated in this range, problems can occur.

One such problem can occur when a pump is installed and run in a situation in which it will produce HEAD in the range of shut-off pressure (left part of the curve, as shown above). Although the pump is designed to operate over the full curve, if it does not produce enough flow the weight of the shaft and the pressure of the water in the drop pipe is not counterbalanced, causing possible wear to the bearings in the pump and motor. **This can occur if a valve has been closed down so far that the flow is greatly restricted or when the pump is pumping water faster than the well can refill itself.**

In addition to causing possible bearing damage, operating the pump in a downthrust condition is an inefficient use of energy and may not allow for proper motor cooling (see page 2).

BEFORE
pump starts pumping

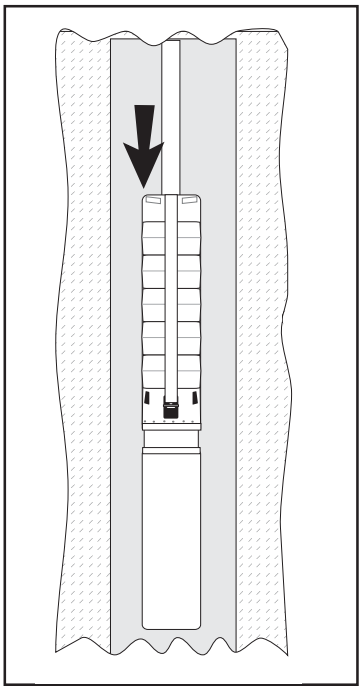

Weight of water and impellers pushes down

AFTER
pump starts pumping

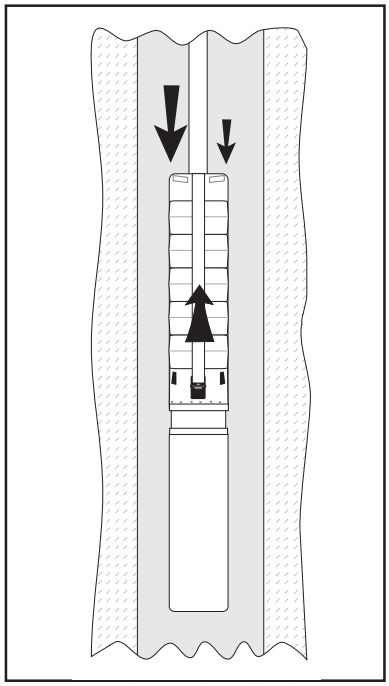

Impellers can produce so much pressure they can grind down against each other

DAMAGE CAUSED

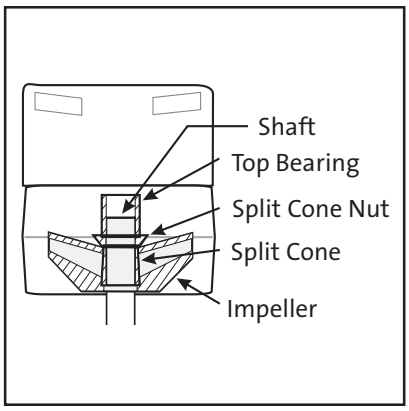

After motor's thrust bearing has worn out, pump components begin to show equal wear from grinding

The best way to check for motor bearing damage is with a shaft height gauge. Refer to the Dismantling & Reassembly section of this manual for complete instructions.

When Something Goes Wrong. . .

Pump Won't Start

Possible Cause	Check This By . . .	Correct This By . . .	
Low or no power at the motor	Check for voltage at the control box or panel. See page 11 for instructions.	If there is no voltage at the control panel, check the feeder panel for tripped circuits and reset those circuits.	1
Fuses are blown or the circuit breakers have tripped.	Turn off the power and remove the fuses. Check for continuity with an ohmmeter as shown on page 13.	Replace the blown fuses or reset the circuit breaker. If the new fuses blow or the circuit breaker trips, the electrical installation, motor, and wires must be checked for defects.	2
(3-phase motors only) **Motor starter overloads are burned or have tripped**	Check for voltage on the line and load side of the starter. Check the amp draw and make sure the heater is sized correctly.	Replace any burned heaters or reset. Inspect the starter for other damage. If the breaker trips again, check the supply voltage. Ensure that heaters are sized correctly and the trip setting is appropriately adjusted.	3
(3-phase motors only) **Starter does not energize**	Energize the control circuit and check for voltage at the holding coil.	If there is no voltage, check the control circuit fuses. If there is voltage, check the holding coil for weak connections. Ensure that the holding coil is designed to operate with the available control voltage. Replace the coil if defects are found.	4
Defective controls	Check all safety and pressure switches for defects. Inspect the contacts in control devices.	Replace worn or defective parts or controls.	5
Motor or cable is defective	Turn off the power and disconnect the motor leads from the control box. Measure the lead-to-lead resistance of the drop cable with an ohmmeter (set to R x 1). Measure the lead-to-ground values with a megohmmeter (set to R x 100K). See pages 12 and 13. Compare these measurements to the rated values for your motor.	If an open or grounded winding is found, pull the pump from the well and recheck the measurements with the lead separated from the motor. Repair or replace the motor or cable.	6
(1-phase motors only) **Defective capacitor**	Turn off the power and discharge the capacitor by shorting the leads together. Check it with an analog ohmmeter (set to R x 100K). See page 11 or use an audible capacitor tester.	When the meter is connected to the capacitor, the needle should jump toward 0 (zero) ohms and slowly drift back to infinity (∞). Replace the capacitor if it is defective.	7
Defective pressure switch or the tubing to it is plugged.	Watch the pressure gauges as the pressure switch operates. Remove the tubing and blow through it.	Replace as neccessary.	8
The pump is mechanically bound or stuck	Turn off the power, pull the pump, and manually rotate the pump shaft. Also check the motor shaft rotation, the shaft height, and the motor's amp draw (to see if it indicates a locked rotor).	If the pump shaft doesn't rotate, remove the pump and examine it. If necessary, dismantle it and check the impellers for obstruction. Check for motor corrosion.	9

Pump Does Not Produce Enough Flow (GPM)

Possible Cause	Check This By . . .	Correct This By . . .	
Shaft is turning in the wrong direction.	Check to make sure the electrical connections in the control panel are correct.	Turn off the power. Correct the wiring. For single phase motors, check the wiring diagram on the motor. For three phase motors, simply switch any two power leads.	10
Pump is operating at the wrong speed (too slow)	Check for low voltage (as shown on page 11) and phase imbalance (as shown on page 10)	Replace defective parts or contact power company, as applicable.	11
Check valve is stuck (or installed backwards)	Pull the pump and reove the check valve.	Re-install or replace.	12
Parts in the pump are worn **or** **Impellers, Inlet Strainer, or Well Screen is clogged**	Install a pressure gauge, start the pump, and gradually close the discharge valve. Read the pressure at shutoff. (Do not allow the pump to operate for an extended period at shutoff).	Convert the PSI you read on the gauge to Feet of Head by: **PSI x 2.31 ft** Add to this number the number of feet (vertically) from the gauge down to the water's pumping level. Refer to the pump curve for the model you are working with to determine the shutoff head expected for that model. If those figures and yours do not match, remove the pump and inspect impellers, chambers, etc., for clogging.	13
The water level in the well may be too low to supply the flow desired **or** **Collapsed well**	Using a depth gauge, check the drawdown in the well while the pump is operating.	If the pumping water level (including drawdown) is not **AT LEAST 3 FEET** above the pump's inlet strainer, either: 1. Lower the pump further down the well. 2. Throttle back the discharge valve to decrease the flow, thereby reducing drawdown.	14
Broken shaft or coupling	Pull pump and inspect	Replace as necessary.	15
There are leaks in the fittings or piping	Pull the pump out of the well.	The suction pipe, valves, and fittings must be made tight. Repair any leaks and retighten all loose fittings.	16

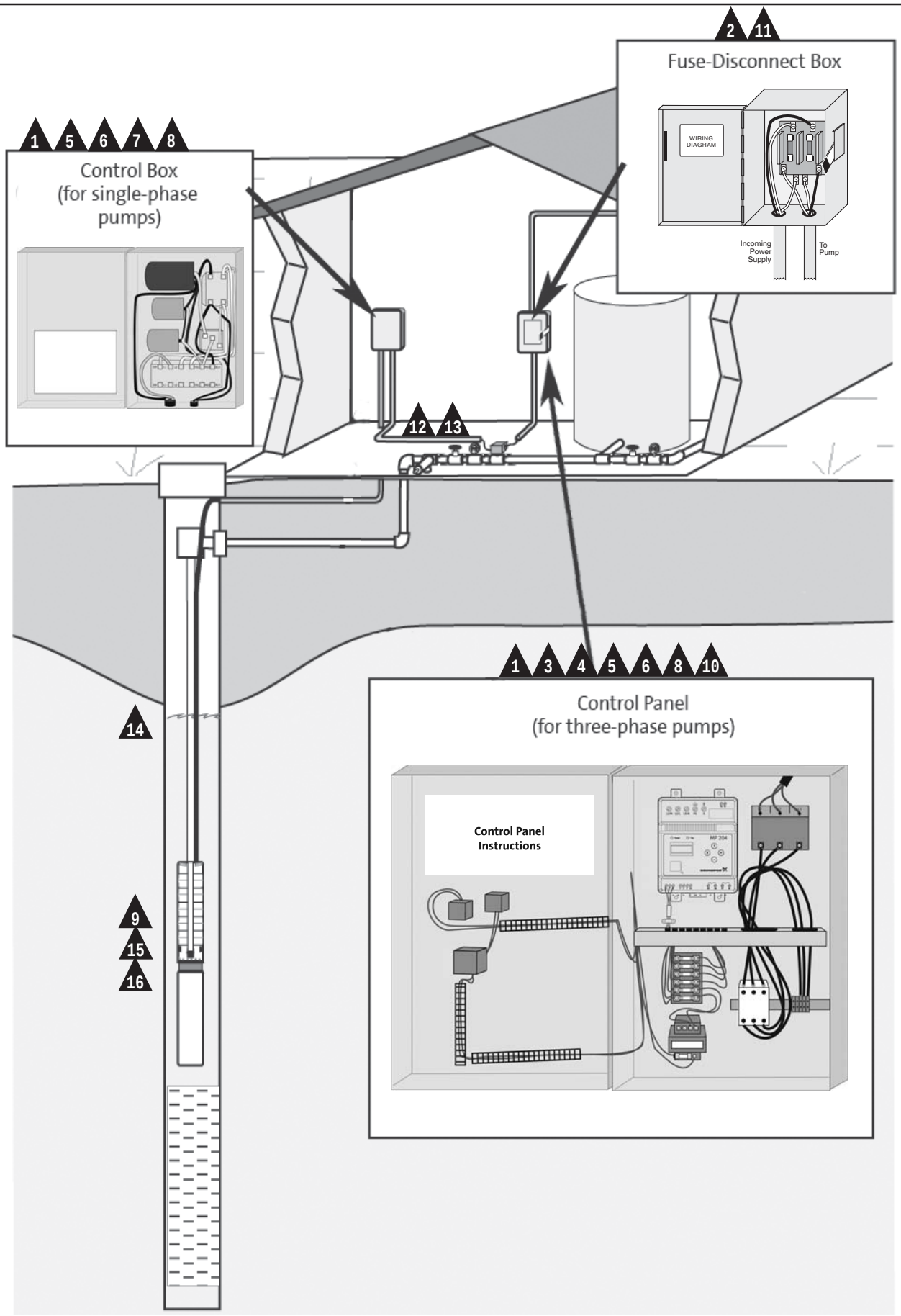
2 11
Fuse-Disconnect Box
WIRING DIAGRAM
Incoming Power Supply
To Pump
1 5 6 7 8
Control Box (for single-phase pumps)
12 13
1 3 4 5 6 8 10
Control Panel (for three-phase pumps)
Control Panel Instructions
14
9
15
16

When Something Goes Wrong. . .

Fuses Blow or Heaters Trip

Possible Cause	Check This By . . .	Correct This By . . .	
Improper voltage	Check the voltage at the control box or panel. See page 11 for instructions.	If voltage varies by more than 10% (+ or -), contact the power company.	
	If the incoming voltage is + or -10%, check the wire size and then measure the distance between the pump motor and the pump control panel.	Rewire with correct gauge. Undersized wire and a great distance between the control panel and the pump motor increases resistance and decreases the voltage by the time it reaches the pump motor.	1
The starter overload is set too low.	Cycle the pump and measure the amperage. See page 10 for instructions.	Increase the heater size (use a slo-bio) or adjust the trip setting. Do not, however, exceed the recommended rating.	2
(3-phase motors only) **Current is imbalanced.**	Check the current draw on each lead to the motor. See page 11 for instructions.	The current imbalance must be within 5% of each other. If they are not, check the wiring and the power supply.	3
The wiring or connections are faulty.	Check to make sure the wiring is correct and there are no loose terminals.	Tighten any loose terminals and replace any damaged wire.	4
(1-phase motors only) **Capacitor is defective**	Turn off the power and discharge the capacitor. Check start and run capacitors with an ohmmeter (set at R x 100K). See page 11 for instructions.	When the meter is connected to the capacitor, the needle should jump towards 0 (zero) ohms and then slowly drift back to infinity (∞). Replace the capacitor if it is defective.	5
Fuse, heater, or starter are the wrong size	Check the fuses and heaters against the motor manufacturer's specification charts.	Replace as necessary.	6
The control box location is too hot	Touch the box with your bare hand during the hottest part of the day -- you should be able to keep your hand on it without burning.	Shade, ventilate, or move the control box so its environment does not exceed 120°F.	7
(1-phase motors only) **Wrong control box**	Check requirements for the motor against the control box specifications.	Replace as necessary.	8
Defective pressure switch	Watch gauges as pressure switch operates.	Replace as necessary.	9
The motor is shorted or grounded.	Turn off the power and disconnect the wiring. Measure the lead-to-lead resistance with an ohmmeter (set to R x1). Measure the lead-to-ground resistance (set to R x100K). Compare these measurements to the rated values for your motor.	If you find an open or grounded winding, remove the motor and recheck the leads. If OK, check the leads for continuity and for bad splice.	10
Poor motor cooling	Find the internal diameter of the well casing (or sleeve, if used) on the chart on page 2 and check for proper cooling.	Increase the pump flow (GPM) so proper cooling is possible (see chart on page 2) or pull the pump out of the well and add a sleeve with a smaller internal diameter *(see chart on page 2).*	11
Bad motor thrust bearing	Measure for high amps as explained on page 10.	If amps are too high, pull the pump and replace the motor.	

Pump Cycles Too Often

Possible Cause	Check This By . . .	Correct This By . . .	
The pressure switch is defective or is not properly adjusted.	Check the pressure setting on the switch. Check the voltage across closed contacts.	Adjust the pressure switch with a screwdriver or replace it if defective.	13
The tank is too small	Check the tank size and amount of air in the tank. The tank size should be about 10 gallons for each GPM needed (16 GPM = 160 gal.). At the pump cut-in pressure, the tank should be about 2/3 filled with air.	Replace the tank with one that is the correct size.	14
There is insufficient air charging of the tank or piping is leaking.	Pump air into the tank or diaphragm chamber. Check the diaphragm for leaks. Check the tank and piping for leaks with soapy water. Check the air-to-water ratio in the tank.	Repair as necessary.	15
Plugged snifter valve or bleed orifice (causing pressure tank to be water-logged)	Examine them for dirt or erosion.	Repair or replace as necessary.	16
Leak in the pressure tank or piping.	Check the setting and operation of the level control.	Readjust the level control setting (according to the manufacturer's instructions) or replace it if defective.	17
The level control is defective or is not properly set.	Check the yield of the well (determined by the well-test) against the pump's performance curve.	Reduce the flow by throttling back the valve. or Change the pump.	18
Pump is oversized for the application. It is outpumping the yield of the well and pumping itself dry.	Refer to the tank's operating and installation instructions and make sure it is installed correctly.	Repair or replace as needed.	19

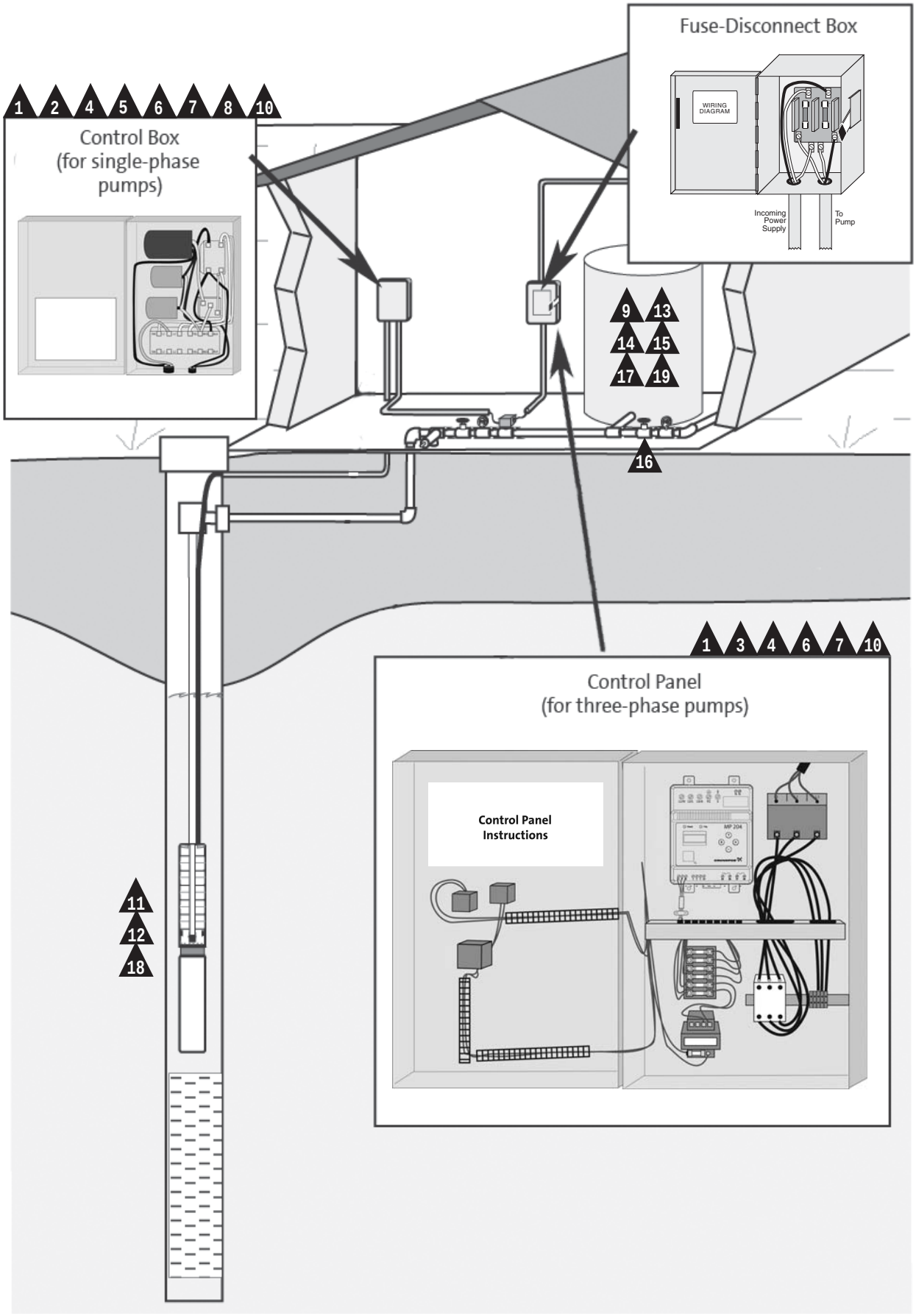
Fuse-Disconnect Box
WIRING DIAGRAM
Incoming Power Supply
To Pump
1 2 4 5 6 7 8 10
Control Box (for single-phase pumps)
9 13
14 15
17 19
16
1 3 4 6 7 10
Control Panel (for three-phase pumps)
Control Panel Instructions
11
12
18

Amperage Check

To check the electrical current (measured in amperes, or "amps") use an ammeter.

Instructions

1. Make sure the pump is running
2. Set the rotary scale on the front of the ammeter to the highest scale.
3. Open the control box and place the jaws of the ammeter around the wire to be measured.
4. Slowly rotate the scale on the ammeter back towards 0 (zero) until an exact reading is shown.
5. Record the measurement
6. Repeat for the other wires.

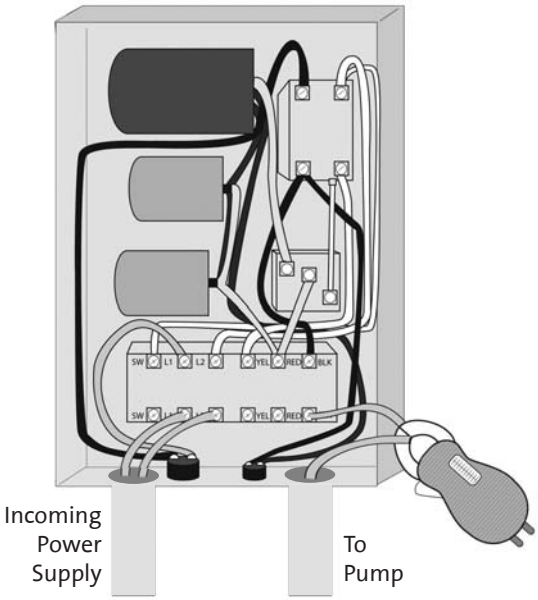

Evaluation

If the amp draw exceeds the service factor amps for the pump (as listed in the Motors section of the Service Manual), then:

- The motor starter may have burned contacts
- The terminals in the starter or terminal box may be loose
- There may be a winding defect. Check the winding and insulation resistance (see pages 12 and 13)
- The motor windings may be shorted or grounded
- The pump may be damaged in some way and may be causing a motor overload.
- A voltage supply or current imbalance (3-phase only) may exist. Follow the steps below to determine if this is true.
- The insulation on the drop cable may be torn, exposing the cable.

Current Imbalance On Three-Phase Motors

If the motor is connected to three-phase power, the balance of those three phases can be checked in the following way:

1. Measure the amperage of each wire as instructed above and record these figures.
2. Add together the total amperage measured by the three wires.
3. Divide this number by three to get the **average** amperage reading for the three wires.
4. Check over your numbers and determine which wire has the greatest difference from the average.
5. Take that number and subtract it from the average to determine the amount of **difference**.
6. Divide the **difference** by the **average**.
7. Multiply this number by 100 to obtain the percent of current imbalance for that particular hookup.
8. Turn **POWER OFF**
9. Repeat these steps for the other two possible hookup installations so that each motor lead is connected to a different power lead than it was before.

	Hookup 1	Hookup 2	Hookup 3
Incoming power leads	L1 L2 L3	L1 L2 L3	L1 L2 L3
Motor leads	A B C	C A B	B C A

(where A, B, and C represent each motor lead or each set of leads joined together to make a single motor lead)

Example:

A	=	51 amps	C	=	50 amps	B	=	50 amps
B	=	46 amps	A	=	49 amps	C	=	48 amps
C	=	53 amps	B	=	51 amps	A	=	52 amps
Total	=	150	Total	=	150	Total	=	150
150/3	=	50	150/3	=	50	150/3	=	50
- 46	=	4	- 49	=	1	- 48	=	2
4/50	=	.08 or 8 %	1/50	=	.02 or 2 %	2/50	=	.04 or 4 %

Evaluation

If the the current imbalance is greater than 5% on all three hookups, then:

- If the largest difference in amps is consistently drawn from the same power lead (L1, L2, or L3 above), contact the power company. Your voltage should be balanced to within + or - 5%.
- If the largest difference in amps is consistently drawn from the same motor lead (A, B, or C above), there is likely a problem with the motor. Check the items listed under "Evaluation" near the top of this page.

If the current imbalance exceeds 5% one or two of the legs, use the hookup that has the least difference and check the motor for some of the other problems listed under "Evaluation" near the top of this page.

Capacitor Check

To check the condition of any capacitor on single phase motors, use an ohmmeter.

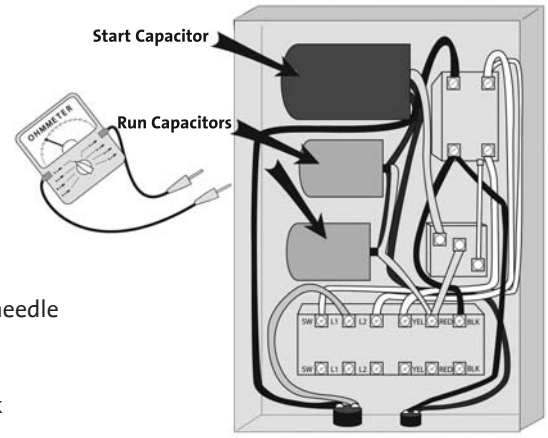

Instructions:

1. Turn the **POWER OFF**.
2. Disconnect the capacitor from the power source.
3. Discharge the capacitor by touching its leads together.
4. Set the scale selector on the ohmmeter to R x 100K.
5. Connect the leads of the ohmmeter to the black and orange wires of the capacitor.
6. Watch the ohmmeter scale.
7. Disconnect one lead from the capacitor for approximately 30 seconds. The needle should return to the last reading taken.

Evaluation

If the capacitor is OK, the needle should swing towards zero and then float back towards infinity (∞). If the needle drops and remains at zero, the capacitor is probably shorted. If the needle remains at a high value, there is an open circuit.

CAUTION: This test may indicate a good capacitor even though it may have lost some capacitance, making the motors run noisy or draw high amps. To safeguard against this, the capacitor can be checked with a capacitor meter.

Supply Voltage Check

To check the supply voltage, use a voltmeter (or amprobe) with the power on.

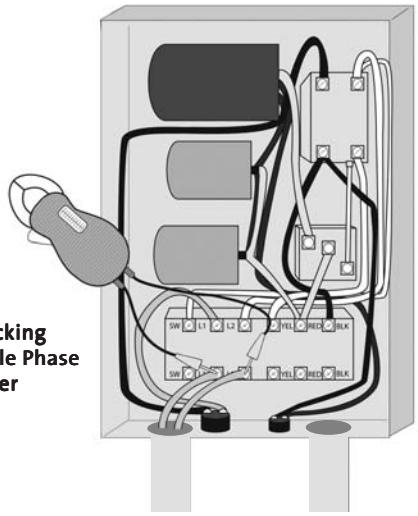

Instructions

1. Set the voltmeter to the highest scale
2. Remove the cover of the control box...BE CAREFUL -- POWER IS STILL BEING SUPPLIED TO THE CIRCUIT. Do not touch the voltmeter leads together while they are in contact with the power lines.
3. Touch the ends of the voltmeter leads as follows:

   Single Phase Motors
   Touch one voltmeter lead to each of the lines supplying power to the control (L_1 and L_2 , or L_1 and N for 115V circuits). →

   Three Phase Motors
   Touch a voltmeter lead to the following:

   - Power leads L_1 and L_2
   - Power leads L_2 and L_3
   - Power leads L_3 and L_1

   } *These tests should give a reading of full line voltage.*

   - Two fuses
   - Two contact points
   - Two heaters

Evaluation

When the motor is under load, the voltage should be -10% and +6% of the nameplate voltage. Any variation larger than this can cause damage to the motor windings and should be noticeable as a high amp problem.

If The Motor Nameplate Reads . . .		Then the minimum and maximum voltage should be . . .	
		Minimum	Maximum
115V	(single phase)	105 volts	121 volts
208V	(single or three phase)	188 "	220 "
230V	" "	210 "	243 "
460V	(three phase)	414 "	487 "
575V	" "	518 "	609 "

Any variations larger than these may indicate a poor electrical supply. The motor should not be operated under these conditions. Contact your power supplier to correct the problem or change the motor to one requiring the voltage you are receiving.

Motor Winding Resistance (lead-to-lead)

To check the electrical condition of the drop cable, splice, and motor windings, a resistance check with an ohmmeter is required.

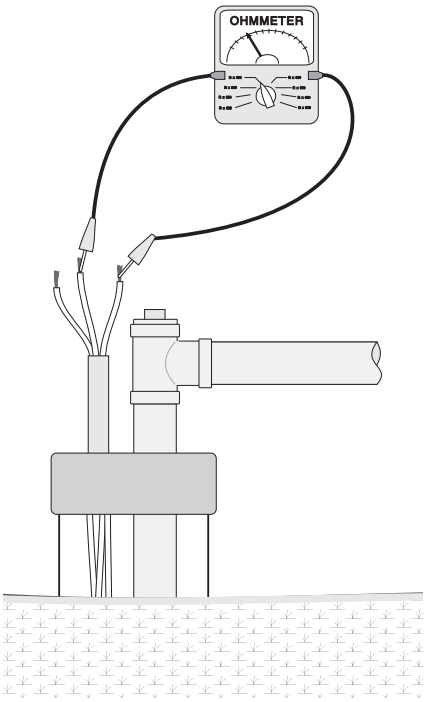

Instructions:

1. Turn the **POWER OFF**.
2. Disconnect all electrical leads to the drop cable.
3. Set the scale selector on the ohmmeter to R x 1 (if you expect ohm values under 10) or R x 10 (for ohm values over 10).
4. Touch the leads of the ohmmeter to two motor leads:
   Single Phase Motors
   Touching the leads of the ohmmeter to the black and yellow leads will measure the main winding's resistance for Franklin and Grundfos 402 motors. The red and yellow leads will be the start winding's resistance.
   Three Phase Motors
   Touching the leads of the ohmmeter to any two black leads will measure that winding's resistance. Repeat for all three possible lead combinations.
5. Watch the ohmmeter scale and record this figure. Subtract the ohm resistance for the drop cable (chart below) from the number. Compare the remaining figure with the one shown in the Motors section of this manual.

If:	Then:
Ohm values are normal	Motor windings are okay
One ohm value is less than normal	That motor winding may be starting to short
One ohm value is greater than normal	That winding may be starting to open
Some ohm values are greater than normal (>25%) and some are less than normal (± 25%)	The leads may be connected incorrectly, or have a break in the insulating jacket

If ohm readings are not normal and you want to verify the problem is not with the splice or drop cable, remove the lead from the motor and check the resistances from pin to pin directly at the motor. If the motor checks out okay, the fault is in the lead or splice (see page 14).

Total Resistance of Drop Cable *(from control box to motor and back)*

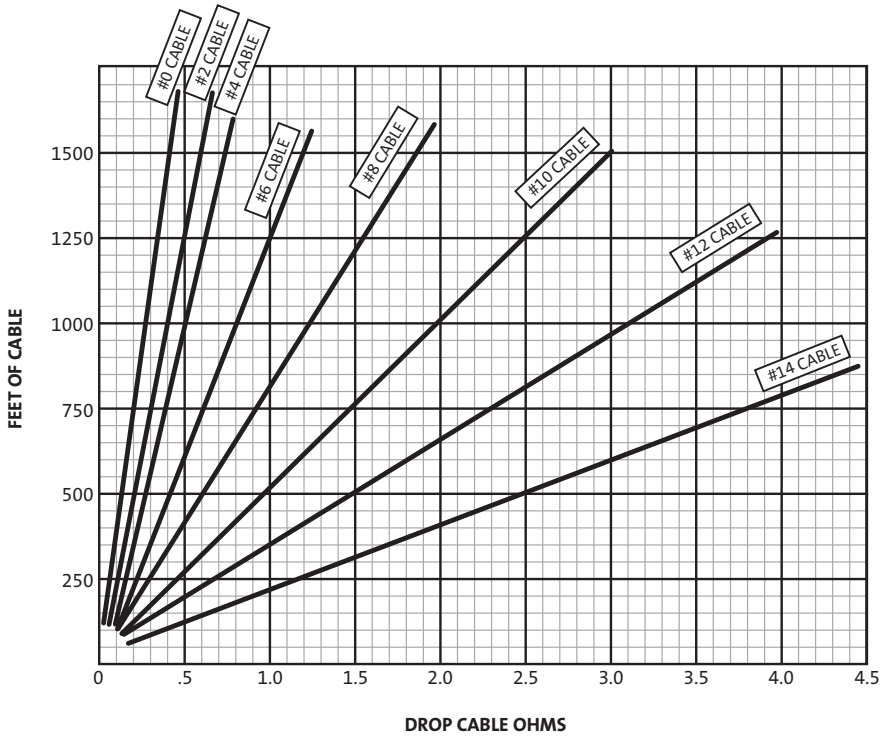

The values shown are for copper conductors. If aluminum conductor drop cable is used, the resistance will be higher for each foot of cable of the same size.

Copper ÷ .61 = Aluminum

Insulation Resistance (lead-to-ground)

To check the insulation resistance of the drop cable, splice, and motor leads, a megohmmeter is required.

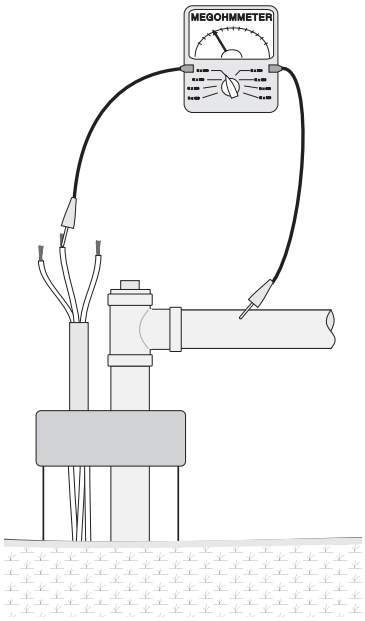

Instructions:

1. Turn the **POWER OFF**.
2. Disconnect all electrical leads to the drop cable.
3. Set the scale selector on the megohmmeter to R x 100, touch its leads together, and adjust the indicator to zero.
4. Touch the leads of the megohmmeter to each of the motor leads and to ground (i.e. L_1 to ground; L_2 to ground, etc.). The well casing, if made of steel, makes an excellent ground.
5. Watch the megohmmeter scale and compare this figure with the chart below.

Evaluation: In general, any ohm value above 1,000,000 ohms indicates everything is OK. The following table gives more specifics.

OHM VALUE	**MEGA**ohm **VALUE**	THIS INDICATES THAT ...
		If The Motor <u>HAS NOT</u> Yet Been Installed:
2,000,000 (or more)	2.0	It is a new motor
1,000,000 (or more)	1.0	It is a used motor than can be used again (insulation OK)
		If The Motor <u>HAS</u> Been Installed: *(means that ohm readings will be for the drop cable plus the motor)*
500,000 - 1,000,000	0.5 - 1.0	The motor is in reasonably good condition
20,000 - 500,000	.02 - 0.5	The motor may have been damaged by lightning or has damaged leads.
10,000 - 20,000	.01 - .02	The motor has certainly been damaged or has damaged leads. The pump should be pulled and repairs made to the motor leads or replace the motor completely. The motor may still operate, but probably not for long.
less than 10,000	0 - .01	The motor has failed or the motor lead insulation has been completely destroyed. The pump must be pulled and the motor lead (drop cable) repaired or the entire motor replaced. **The motor will not run in this condition.**

Fuses

To check the condition of electrical fuses, an ohmmeter is required.

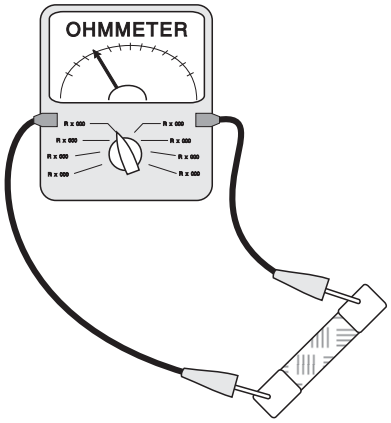

Instructions:

1. Turn the **POWER OFF** at the main disconnect or power source.
2. Remove the fuse.
3. Set the scale selector on the ohmmeter to R x 1.
4. Touch each lead of the ohmmeter to one end of the fuse.

Evaluation:

A good fuse should have zero (0) ohm reading. If the ohm value is near or past infinity, the fuse must be replaced.

Cable and Splice Condition

To check the electrical condition of the cable and splice insulation, a megohmmeter is required.

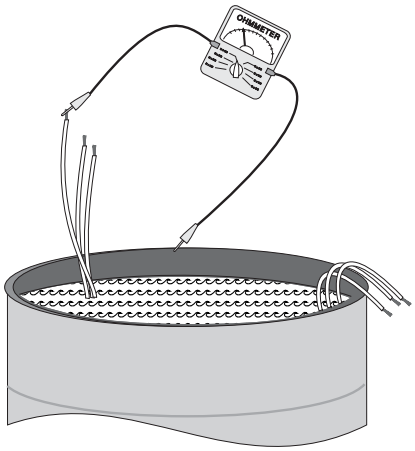

Instructions:

1. Turn the **POWER OFF.**
2. Remove the cable from the motor and electrical supply.
3. Submerge the cable in a steel barrel of water. Make sure both ends stay out of the water. Salt may be added to increase the conductance of the water.
4. Set the megohmmeter to R x 100K. Zero-adjust the ohmmeter by touching its two leads together.
5. Touch one megohmmeter lead to the steel barrel and other to a bare cable lead.
6. If the megohmmeter drifts towards zero (0), either that lead or the splice for that lead has a leak (fault). To find out if it is the splice:

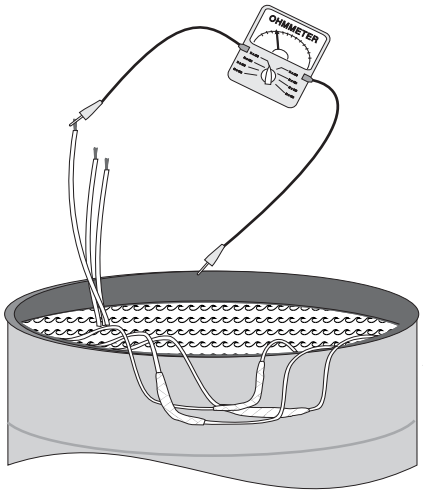

   a. Raise the splice for that lead out of the water.
   b. Repeat step 5.
   c. If the megohmmeter drifts towards infinity, the fault is in the splice.
   d. If the megohmmeter drifts towards zero (0), the fault is somewhere else in that lead. Gradually pull the rest of that cable lead out of the water until the megohmmeter drifts towards infinity. When it does, the leak is at that point in the cable lead.
7. Repeat for each of the motor leads.

Evaluation:
Any faulty leads should be replaced using waterproof electrical tape.

Checking the Relay

(SINGLE-PHASE CONTROL BOXES ONLY)

To check the electrical condition of the relays on single phase control boxes, an ohmmeter is required.

Specific instructions for checking the relay differ from control box to control box. Refer to the inside cover of your control box.

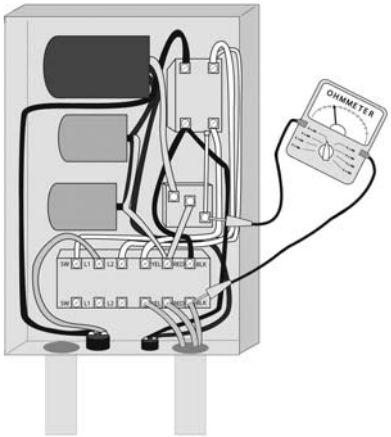

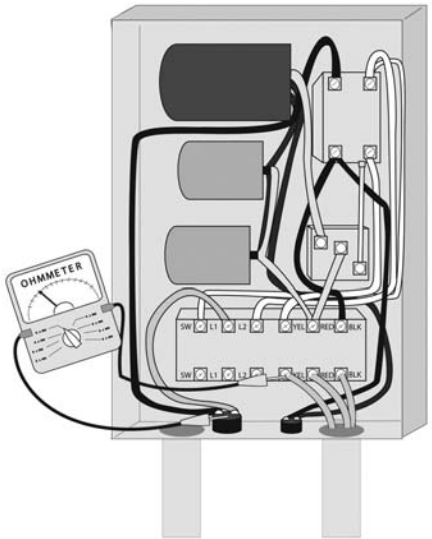

Overload Protection

To check the electrical condition of the thermal overloads, an ohmmeter is required.

Instructions:

1. Turn the **POWER OFF**.
2. Set the scale selector on the ohmmeter to R x 1.
3. Touch one of the ohmmeter leads to an overload protector and one to terminal 1, then terminal 3. Repeat for each overload protector.

Evaluation:
If the ohm values are 0.5 ohms or less, the overload protectors should still be functional. If not, they should be replaced.

Definitions

NET POSITIVE SUCTION HEAD (two types)

Before a centrifugal water pump can operate, the water must enter the pump under a certain minimum amount of pressure. For submersible pumps, this minimum is easily reached, since the pump is submerged in water and both the atmospheric pressure (14.7 psi) and the pressure of the water in the well are present. The amount of pressure (expressed in feet of head) required for a given pump to operate is known as its Net Positive Suction Head **Required**.

This number is determined by extensive testing of the pump by the manufacturer. These requirements are normally shown in graphical form (an **NPSH curve**) for a pump at every flow (GPM) within the flow range for which the pump is designed**.** As a pump's flow (GPM) increases, the NPSHR needed to continue that flow (without cavitating) also increases.

The amount of pressure (expressed in feet of head) that is actually available to a pump is known as its Net Positive Suction Head **Available**. Since the NPSH **Available** to the pump is almost always greater than the NPSH **Required** (for submersible pumps, that is), they are usually not a cause for any concern when sizing a pump or troubleshooting.

For submersible pumps, NPSH Required should not be confused with Total Dynamic Head, which is the amount of head the pump must produce to deliver water at the desired flow rate (GPM) in a given situation. ***Total Dynamic Head*** *(or TDH, as it is sometimes called) is explained below.*

TOTAL DYNAMIC HEAD

When selecting (or "sizing") a pump, two questions must be answered:

1. How much flow is needed ?
   (expressed in Gallons Per Minute)

2. How much head must the pump produce ?
   *(known as **Total Dynamic Head**)*

To determine the Total Dynamic Head the pump must produce, 5 pieces of information are needed:

A **STATIC WATER LEVEL**

+

B **DRAWDOWN**
(as the pump is pumping)

+

C **TANK ELEVATION**

+

D **TANK PRESSURE**
(multiply by 2.31 to convert psi to feet of head)

+

E **FRICTION LOSSES**

THE TOTAL
OF THESE 5 NUMBERS IS THE AMOUNT OF HEAD THE PUMP MUST PRODUCE

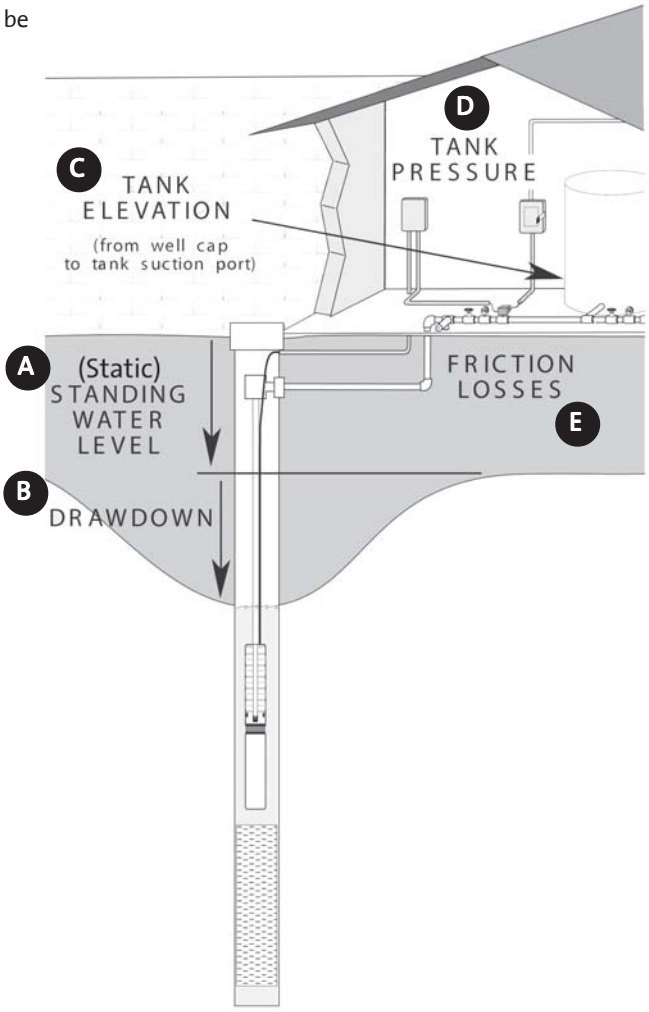

AFFINITY LAWS

The mathematical relationships which permit the head, capacity, brake horsepower (BHP), and NPSH of centrifugal pumps to be predicted based on small changes in impeller diameter size or shaft speed (RPM) changes. These relationships are:

For diameter changes at a constant RPM:

$$\frac{D_1}{D_2} = \frac{GPM_1}{GPM_2}$$ *Flow changes in direct proportion to the ratio of the diameter change.*

$$\left(\frac{D_1}{D_2}\right)^2 = \frac{H_1}{H_2}$$ *Head changes to the square ratio of the ratio of the diameter change.*

$$\left(\frac{D_1}{D_2}\right)^3 = \frac{BHP_1}{BHP_2}$$ *BHP changes to the cube of the ratio of the diameter change*

For RPM changes:

$$\frac{RPM_1}{RPM_2} = \frac{GPM_1}{GPM_2}$$

$$\left(\frac{RPM_1}{RPM_2}\right)^2 = \frac{NPSH_1}{NPSH_2}$$

$$\left(\frac{RPM_1}{RPM_2}\right)^2 = \frac{H_1}{H_2}$$

$$\left(\frac{RPM_1}{RPM_2}\right)^3 = \frac{BHP_1}{BHP_2}$$

Head is affected by the square of the ratio of RPM change and BHP is affected by the cube of the ratio of the RPM change

Conversion Formulas

HEAD (in feet) =

$$\frac{\text{Pressure (PSI)} \times 2.31}{\text{Specific Gravity (for water, 1.0 at ambient temperatures)}}$$

PRESSURE (PSI) =

$$\frac{\text{HEAD (in ft)} \times \text{Specific Gravity (for water, 1.0 at ambient temperatures)}}{2.31}$$

ATMOSPHERIC PRESSURE Pressure of the Atmosphere Pushing Down (at sea level) = 14.7 PSI = 34 feet of HEAD

BRAKE HORSEPOWER Horsepower Delivered to the Pump Shaft =

$$\frac{\text{GPM} \times \text{HEAD} \times \text{Specific Gravity (for water, 1.0 at ambient temps)}}{3960 \times \text{Efficiency Of Pump}}$$

PUMP EFFICIENCY Of The Pump =

$$\frac{\text{GPM} \times \text{HEAD} \times \text{Specific Gravity}}{3960 \times \text{Brake Horsepower}}$$

FOOT POUNDS = Newton Meters (or Nm) x .7376

DEGREES FARENHEIT = (Degrees Celsius x 9/5) + 32

Water Vapor Pressure and Specific Gravity

°F	°C	Specific Gravity (1 at 60°F)	Weight (Lbs per cubic foot)	Vapor Pressure (PSIA)	Vapor Pressure (in feet)
32	0	1.002	62.42	0.0885	0.204
40	4.4	1.001	62.42	0.1217	0.281
45	7.2	1.001	62.40	0.1475	0.340
50	10.0	1.001	62.38	0.1781	0.411
55	12.8	1.000	62.34	0.2563	0.591
60	15.6	1.000	62.34	0.2563	0.591
65	18.3	.999	62.31	0.3056	0.839
70	21.1	.999	62.27	0.3631	0.839
75	23.9	.998	62.24	0.4298	0.994
80	26.7	.998	62.19	0.5069	1.172
85	29.4	.997	62.16	0.5959	1.379
90	32.2	.996	62.11	0.6982	1.617
95	35.0	.995	62.06	0.8153	1.890
100	37.8	.994	62.00	0.9492	2.203
110	43.3	.992	61.84	1.275	2.965
120	48.9	.990	61.73	1.692	3.943
130	54.4	.987	61.54	2.223	5.196
140	60.0	.985	61.39	2.889	6.766
150	65.6	.982	61.20	3.718	8.735
160	71.1	.979	61.01	4.741	11.172
170	76.7	.975	60.79	5.992	14.178
180	82.2	.972	60.57	7.510	17.825
190	87.8	.968	60.35	9.339	22.257
200	93.3	.964	60.13	11.526	27.584
212 (boiling point)	100.0	.959	59.81	14.696	35.353
220	104.4	.956	59.63	17.186	41.343
240	115.6	.948	59.10	24.97	60.77
260	126.7	.939	58.51	35.43	87.05
280	137.8	.929	58.00	49.20	122.18
300	148.9	.919	57.31	67.01	168.22
320	160.0	.909	56.66	89.66	227.55
340	171.1	.898	55.96	89.66	227.55
360	182.2	.886	55.22	153.04	398.49
380	193.3	.874	54.47	195.77	516.75
400	204.4	.860	53.65	247.31	663.42
420	215.6	.847	52.80	308.83	841.17
440	226.7	.833	51.92	381.59	1056.8
460	237.8	.818	51.02	466.9	1317.8
480	248.9	.802	50.00	566.1	1628.4
500	260.0	.786	49.02	680.8	1998.2

Water Properties at Different Altitudes

ALTITUDE		BAROMETER READING		ATMOS. PRESSURE		Boiling Point Of Water F°
Feet	Meters	IN. HG.	MM. HG	PSIA	Feet of Water	
-1000	-304.8	31.0	788	15.2	35.2	213.8
-500	-152.4	30.5	775	15.0	34.6	212.9
0	**0.0**	**29.9**	**760**	**14.7**	**33.9**	**212.0**
+500	+152.4	29.4	747	14.4	33.3	211.1
+1000	304.8	28.9	734	14.2	32.8	210.2
1500	457.2	28.3	719	13.9	32.1	209.3
2000	609.6	27.8	706	13.7	31.5	208.4
2500	762.0	27.3	694	13.4	31.0	207.4
3000	914.4	26.8	681	13.2	30.4	206.5
3500	1066.8	26.3	668	12.9	29.8	205.6
4000	1219.2	25.8	655	12.7	29.2	204.7
4500	1371.6	25.4	645	12.4	28.8	203.8
5000	1524.0	24.9	633	12.2	28.2	202.9
5500	1676.4	24.4	620	12.0	27.6	201.9
6000	1828.8	24.0	610	11.8	27.2	201.0
6500	1981.2	23.5	597	11.5	26.7	200.1
7000	2133.6	23.1	587	11.3	26.2	199.2
7500	2286.0	22.7	577	11.1	25.7	198.3
8000	2438.4	22.2	564	10.9	25.2	197.4
8500	2590.8	21.8	554	10.7	24.7	196.5
9000	2743.2	21.4	544	10.5	24.3	195.5
9500	2895.6	21.0	533	10.3	23.8	194.6
10000	3048.0	20.6	523	10.1	23.4	193.7
15000	4572.0	16.9	429	8.3	19.2	184.0

LSP-TL-015 Rev. 08/06
PRINTED IN USA

GRUNDFOS Pumps Corporation
17100 W. 118th Terrace
Olathe, Kansas 66062
Phone: 913.227.3400
Fax: 913.227.3500

www.grundfos.com

GRUNDFOS Canada, Inc.
2941 Brighton Road
Oakville, Ontario L6H 6C9 Canada
Phone: 905.829.9533
Fax: 905.829.9512

Bombas GRUNDFOS de Mexico S.A. de C.V.
Boulevard TLC No. 15
Parque Industrial Stiva Aeropuerto
Apodaca, N.L. Mexico 66600
Phone: 52.81.8144.4000
Fax: 52.81.8144.4010

GRUNDFOS®

TAG: LSH-3000
LSH-3004

3E	3N	3B
1" to 3" NPT	#10 Machine Screws from Underside	3/8" - 18NPT, 5/8" - 18UNF, 5/8" - 24UNEF
1 thru 7	1 thru 3	1
Series 3E fittings are cast metal, pressure-tight assemblies capable of handling 1-7 probes. Attachment to vessels is accomplished with external pipe threading. 3E Fittings require the use of 3R rigid or 3W wire suspended electrodes.	Series 3N fittings accommodate 1-3 probes operating at atmospheric pressure. The assembly mounts on a flat surface atop open tanks or closed vessels. 3N Fittings require the use of 3R rigid or 3W wire suspended electrodes.	Series 3B fittings are compact pressure tight assemblies that hold a single electrode probe for use in water and chemicals. These fittings incorporate a 1/4-20 female thread that must be combined with a Series 3R (rigid rod electrode) or Series 3W/3Y (wire suspended electrode) to make a complete assembly.
Die-cast aluminum, epoxy coated	Die-cast aluminum, epoxy coated	—
Cast iron, red brass, 316 stainless steel	PVC, red brass, 316 stainless steel	316 stainless steel
Teflon®	Teflon®	Teflon®
125 psig @ 353°F (cast iron) 250 psig @ 406°F (brass, 316 S.S.)	0 psig @ 150°F (PVC) 0 psig @ 500°F (brass, 316 S.S.)	250 psig @ 406°F 500 psig @ 75°F
U.L. File #MP2489, Vol. 1 Sec. 1; CSA	CSA File #LR11644	U.L. File #MP2489, Vol. 1 Sec. 1; CSA

	No. of Probes	Attachment to Vessel	Conduit Boss Thread Size	Terminal Housing Size (W" x D" x H")
3E	1	1" NPT	1/2" NPT	2-1/4 x 2-1/4 x 2-1/4
	2-3	2" NPT	1/2" NPT	3-1/4 x 3-1/4 x 2-3/8
	4	2-1/2" NPT	1/2" NPT	3-1/4 x 3-1/4 x 2-3/8
	5-7	3" NPT	3/4" NPT	4 x 4 x 2-1/2
3N	1-3	2-1/4" square flat pad, 1-1/2" dia. hole in top of vessel secured with #10 machine screws at the corners of a 1-1/2" square	1/2" NPT	2-1/4 x 2-1/4 x 2-1/4

3E 2 A

Series
3E

Number of Probes
1 thru **7**

Body Material
A – Cast Iron
B – Red Brass
C – 316 Stainless Steel

3N X X

Series
3N

Number of Probes
1 thru **3**

Body Material
A – PVC
B – Red Brass
C – 316 Stainless Steel

3B X B

Series
3B

Thread
1 – 3/8" - 18 NPT
2 – 5/8" - 18 UNF
3 – 5/8" - 24 UNEF

Metal Parts
B – 316 Stainless Steel

3R, 3W[1]	3R, 3W[1]	3R solid rod (up to 4') 3W[1] or 3Y[2] (greater than 4')

Custom options available. Consult factory.

TAG: LSH-3000
LSH-3004

Gems Sensors & Controls

Series 3R/3T
General Purpose Probes

- Metallic Rods
- Available in Many Materials for Various Requirements
- Adaptable for Various Fittings

For general purpose use, Series 3R probes are metallic rods with threaded ends that screw into a fitting that extends vertically down into the liquid. Available in a variety of materials for different applications. 3T tapered rods are also available.

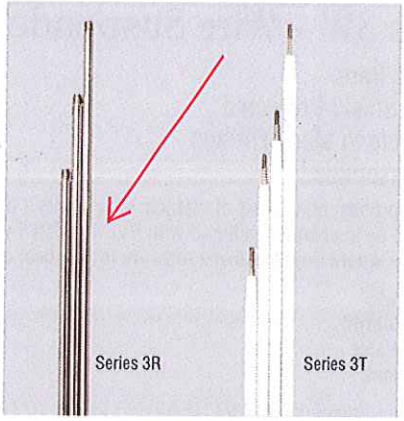

Specifications

Style	
Series 3R	1/4" (.64 cm) threaded rod
Series 3T	1/4" (.64 cm) tapered rod
Material	Brass, Hastelloy C, Monel, 316 stainless steel, titanium, Carp. 20
Sheathing (optional)	PVC heat shrink 200°F (93°C), Teflon® heat shrink 350°F (177°C)

Applications

3R: For use with Series 3E, 3F, 3G, 3B fittings

3T: For use with Series 3G and other custom configurations

How to Order

Use the **Bold** characters from the chart below to construct a product code.

3R **2** **C** **4**

Series
3R **3T**

Length (Feet)
1 – One
2 – Two
3 – Three
4 – Four
5 – Five
6 – Six
7 – Seven
8 – Eight
9 – Nine
10 – Ten

Probe Material
A – Brass
C – 316 Stainless Steel
D – Carp. 20
E – Hastelloy B
F – Hastelloy C
G – Monel
H – Titanium

Sheathing Heat Shrink
0 – None
4 – PVC
5 – Teflon®

Contact your representative for custom lengths.

Note: Long lengths can be coupled to facilitate shipping and installation. Consult factory.

Dimensions

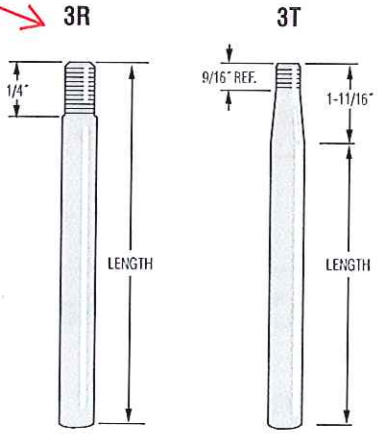

WARRICK CONDUCTIVITY SENSORS

TAG: LSH-3002
LSH-3003

Series 3W – Wire Suspended Probes

- Metallic Bars
- Plastic Shield Protected
- Adaptable to Many Fittings
- Field Assembled

Series 3W probes, consisting of metallic bars within a protective plastic shield, are designed to be suspended in liquid with PVC-insulated wires. They are ideal for applications where rigid electrode rods are impractical or cumbersome, such as:

- Deep Wells
- Pump Control
- Waste Water
- Deep Tanks

7/8″ (2.22 cm) diameter x 3-3/4″ (9.52 cm) length. 3Z1A wire and 3Z1B adaptor kit required for use with 3E, 3F and 3N fittings.

X 4

Series 3W

Components Detail

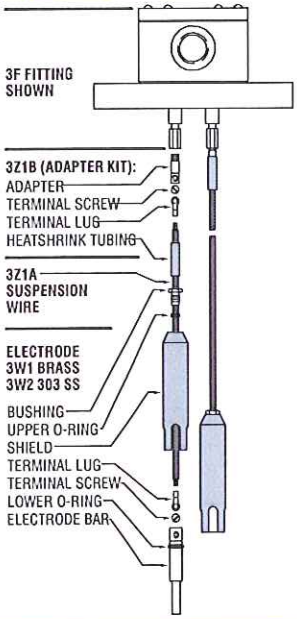

How to Order

Select a 3W electrode, a 3Z1B adaptor and a length of 3Z1A suspension wire to form a complete suspended probe.

1. 3W Electrodes

Probe Material	Part Number
Brass	3W1
316 Stainless Steel	3W2

2. 3Z1B Adaptor Kit
For use with 3E, 3F and 3N fittings.
Part Number: 3Z1B

3. 3Z1A Suspension Wire
Order in standard or custom length.

Length (Feet)	Part Number
500	100325-500
1000	100325-1000
5000	100325-5000
Custom	3Z1A-20

Specify in one foot increments up to 5000 ft.

Series 3Y – Corrosion Resistant Probes

- Metallic Bars
- Corrosion Resistant
- Available in Many Materials for Various Requirements
- Adaptable for Various Fittings

Series 3Y wire suspended probes consist of metallic bars within a protective plastic shield, designed to be suspended in liquid. Series 3Y suspension wires are PVC or Teflon© insulated for use in corrosive liquid applications. 7/8″ (2.22 cm) diameter x 3-1/2″ (8.90 cm) length.

Series 3Y

Specifications

Style	Wire suspended
Tip Material	Carp. 20, Hastelloy C, 316 stainless steel
Shield Material	PVC 150°F (66°C), Teflon©

How to Order

Use the **Bold** characters from the chart below to construct a product code.

3Y X X X

Series
3Y

Shield Material
1 – PVC
3 – Teflon©

Probe Tip Material
C – 316 Stainless Steel
D – Carp. 20
F – Hastelloy C

Length of Wire
1 – 10 feet
2 – 20 feet
3 – 30 feet
etc.

Note: 3Z1B Connector is used to connect suspension wire with 3B, 3E, 3F, 3G or 3N fitting.

Applications

- General Purpose
- Wire Suspended Probes
- Corrosive Liquids, Chemicals

13B63622 150S400-22 60 Hz

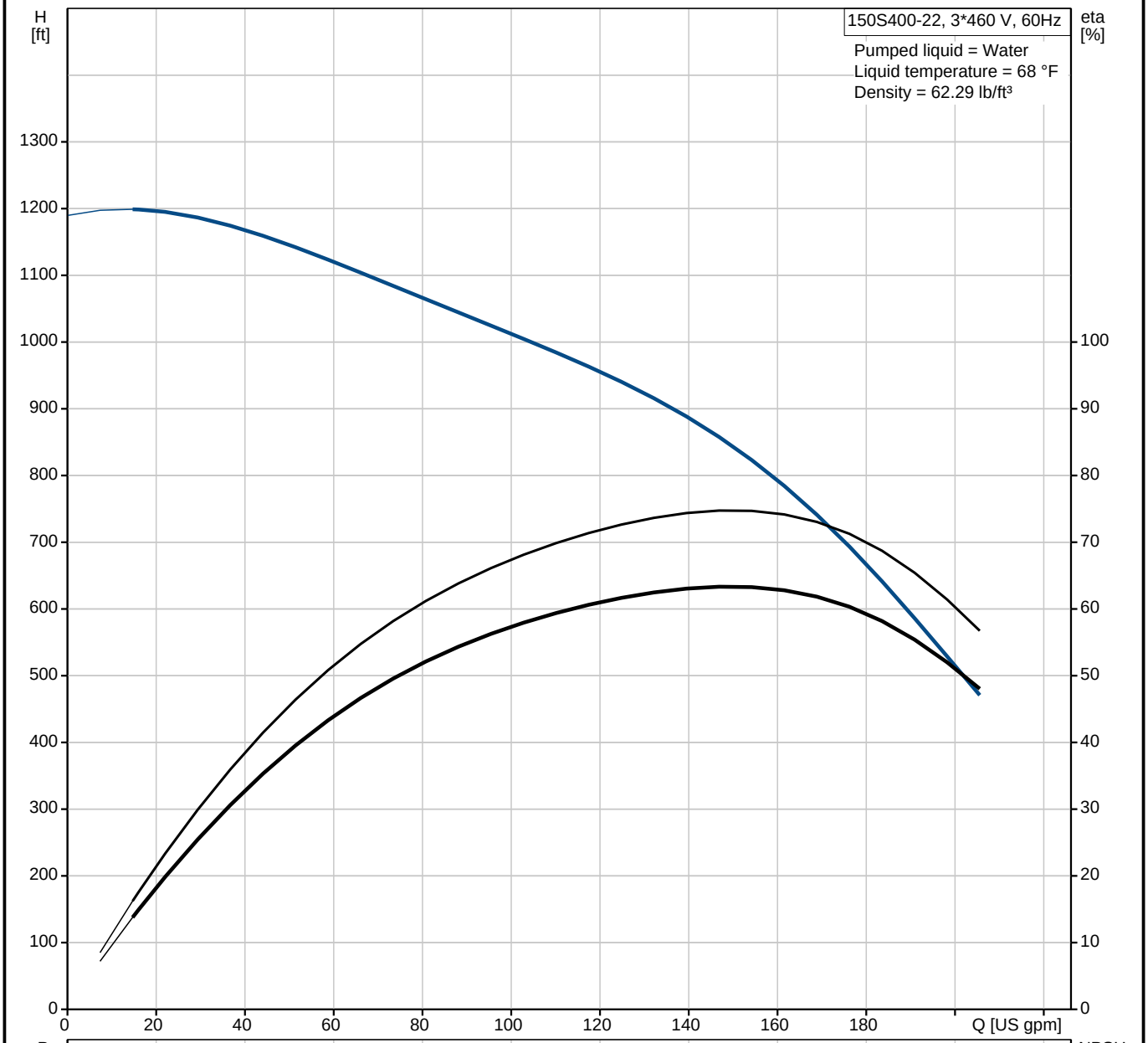

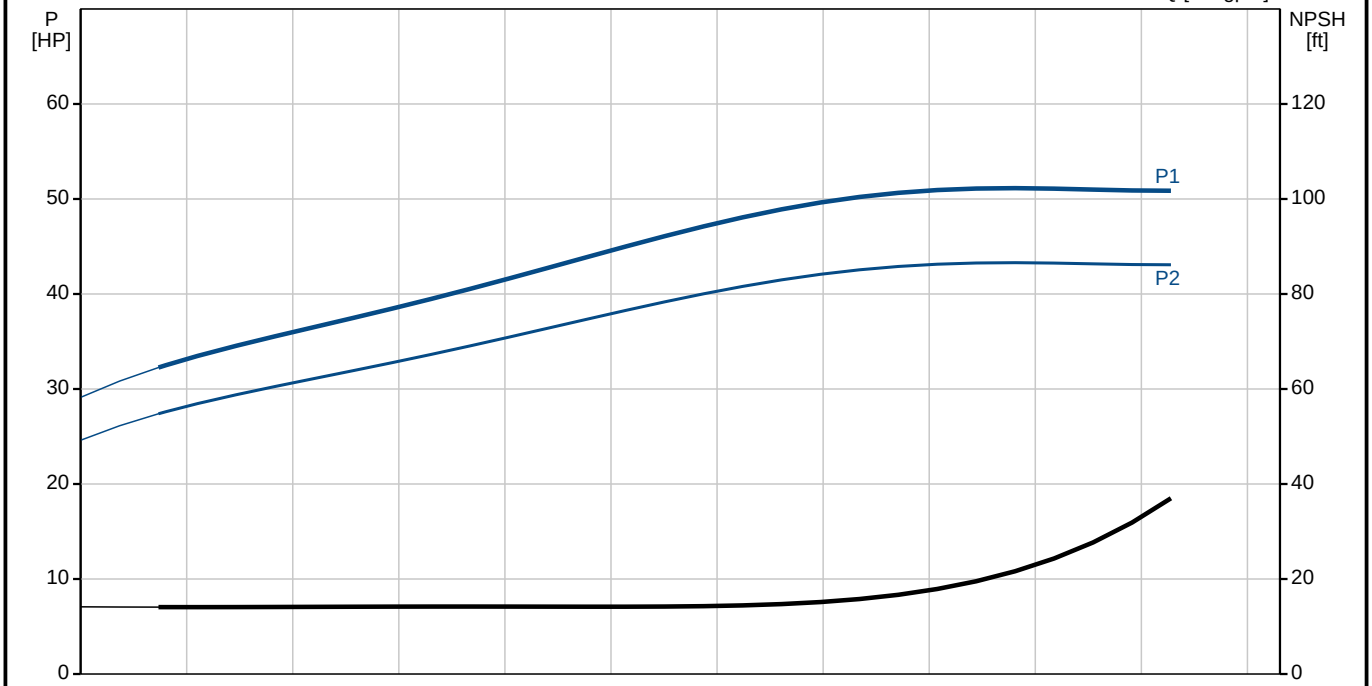

Description	Value
General information:	
Product name:	150S400-22
Position	
Product No.:	13B63622
EAN:	5700391428203
Price:	On request
Technical:	
Speed for pump data:	3450 rpm
Rated flow:	159 US gpm
Rated head:	784 ft
Shaft seal for motor:	SIC/SICNBR
Curve tolerance:	ISO9906:2012 3B
Stages:	22
Model:	A
Valve:	pump with built-in non-return valve
Curve tolerance:	ISO9906:2012 3B
Materials:	
Pump:	Stainless steel
	DIN W.-Nr. 1.4301
	AISI 304
Impeller:	Stainless steel
	DIN W.-Nr. 1.4301
	AISI 304
Motor:	Stainless steel
	DIN W.-Nr. 1.4301
	AISI 304
Installation:	
Maximum ambient pressure:	870 psi
Motor diameter:	6 inch
Liquid:	
Max liquid temperature at 0.15 m/sec:	116.6 °F
Electrical data:	
Motor type:	MS6000
Rated power - P2:	40 HP
KVA code:	H
Main frequency:	60 Hz
Rated voltage:	3 x 440-460-480 V
Start. method:	direct-on-line
Starter:	3
Service factor:	1.15
Rated current:	65.0-62.0-61.0 A
Starting current:	470-520-560 %
	320 A
Cos phi - power factor:	0.88-0.86-0.84
Rated speed:	3440-3460-3480 rpm
Axial load max:	59.5 lb
Motor efficiency at full load:	85,0 %
Enclosure class (IEC 34-5):	IP68
Insulation class (IEC 85):	F
Motor protection:	NONE
Thermal protec:	external
Built-in temperature transmitter:	yes
Motor Number:	96166170
Cable number:	96163476
Controls:	
Heather:	K78
Others:	

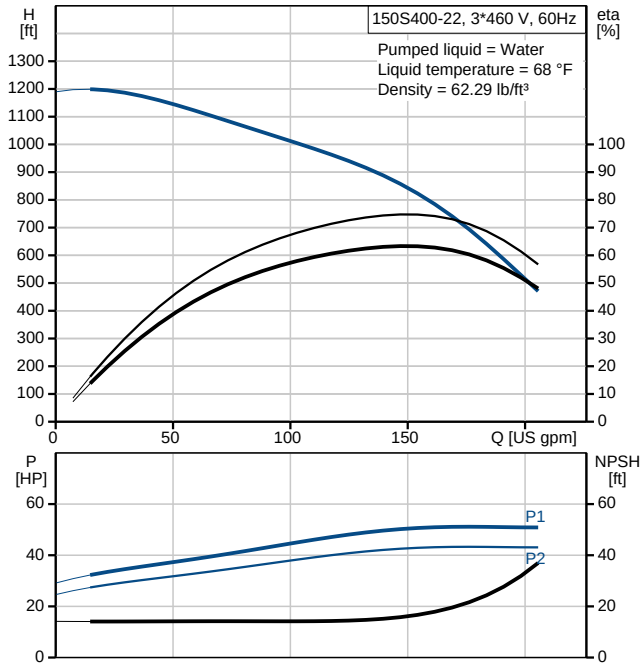

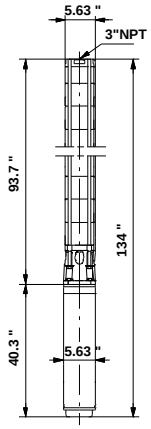

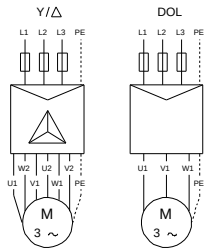

U1, W2	Brown
V1, U2	Black
W1, V2	Grey

Description	Value
Net weight:	281 lb
Gross weight:	381 lb
Sales region:	Namreg

13B63622 150S400-22 60 Hz

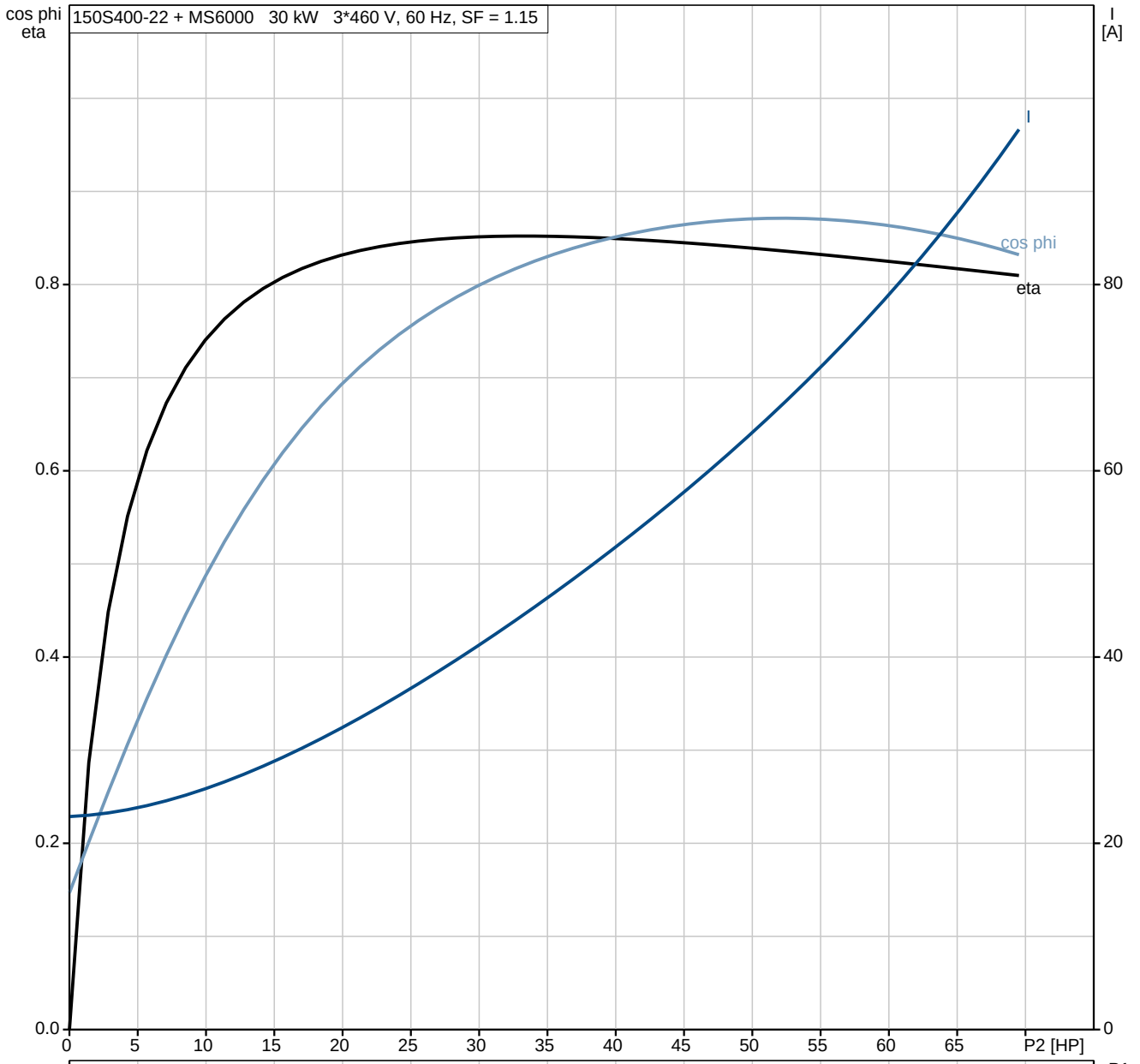

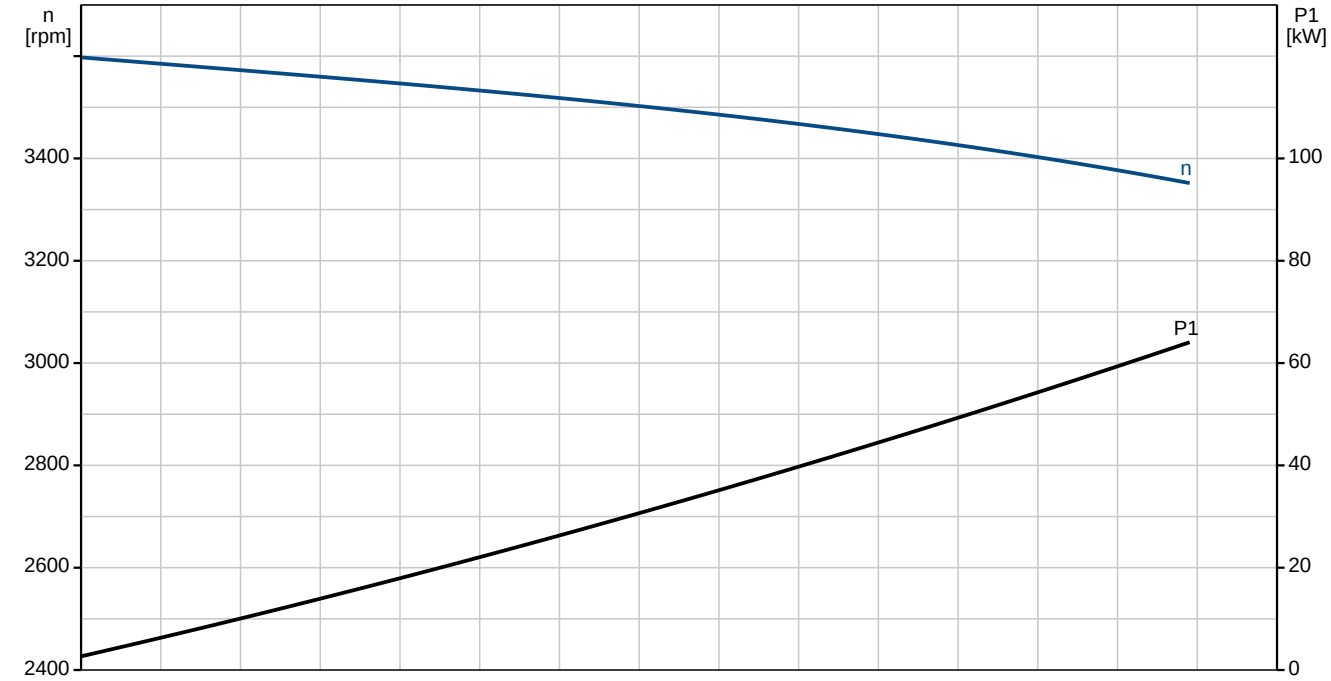

13B63622 150S400-22 60 Hz

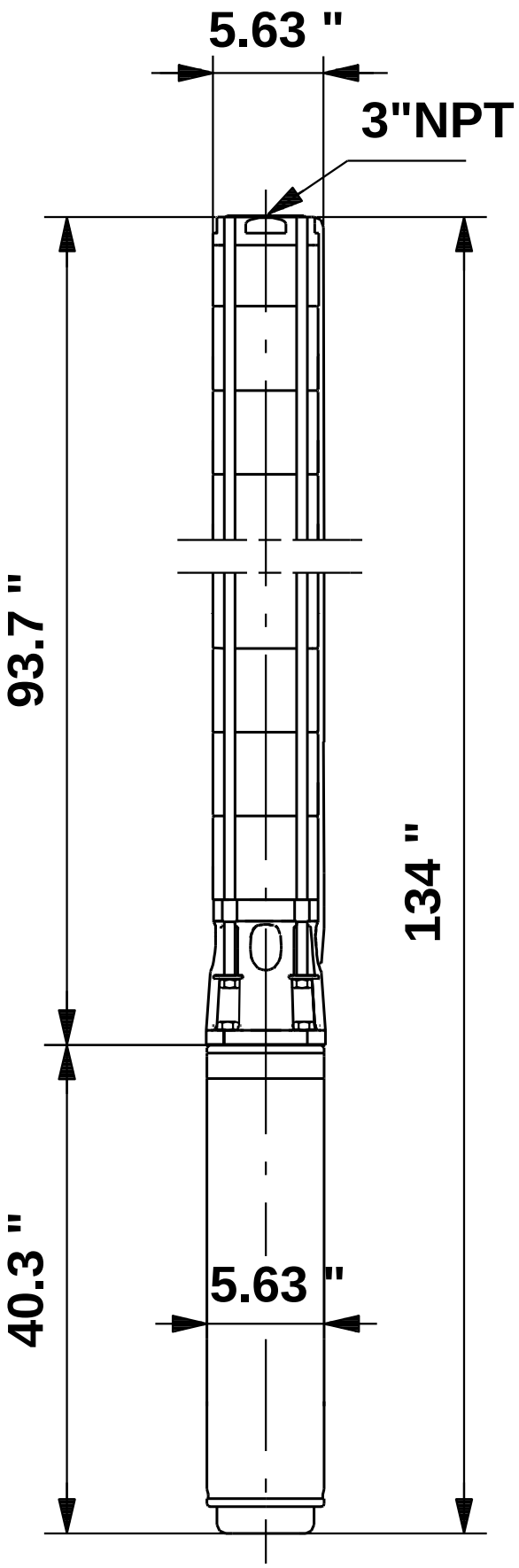

Note! All units are in [mm] unless otherwise stated.
Disclaimer: This simplified dimensional drawing does not show all details.

13B63622 150S400-22 60 Hz

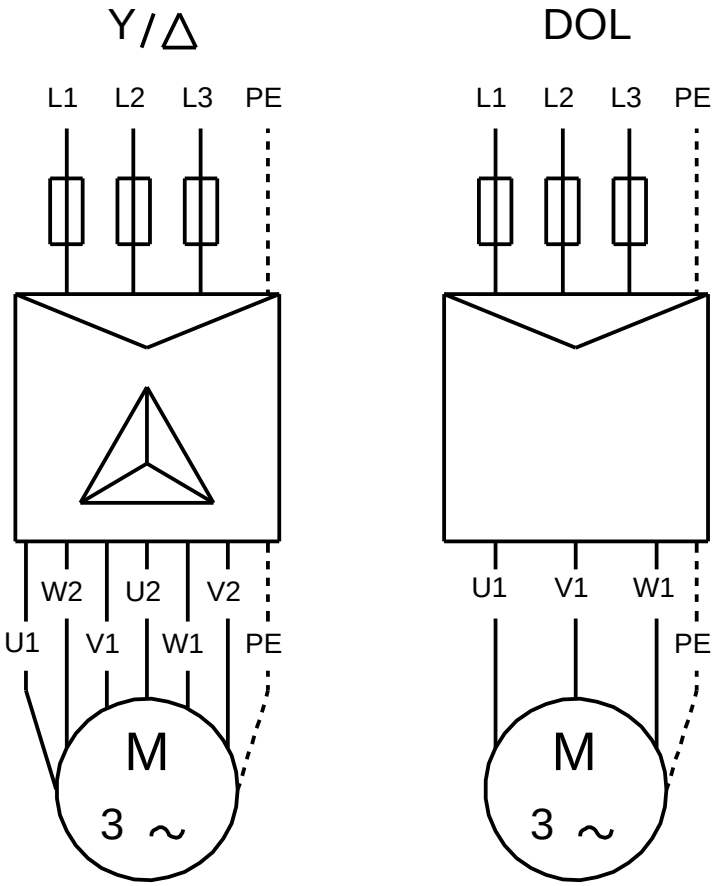

U1, W2	Brown
V1, U2	Black
W1, V2	Grey

All units are [mm] unless otherwise presented.

Part #: IMS3R-RV-S3/J-G100
Nema 3R with C/B Disconnect
40HP/460VAC/3-Phase

IMS–RV Intelligent Motor Soft-Starter

3Ø, 200~460VAC, 2–250HP,
ADVANCED ELECTRONIC OVERLOAD
INTEGRATED CONTACTOR BYPASS

The World's Most Intelligent Soft-Starter

Integrated electronic motor protection

- Our most advanced motor protection
- Wide range class 5-30 electronic overload
- Advanced protective features include over/under voltage/power, phase loss/unbalance, stalled/locked rotor, cycle fault and UL 1053 ground fault

Approved as equal, with exception to autotransformer requirement.

Soft start features

- Adjustable current limit, initial voltage, start/stop time
- Coast to stop
- Torque boost
- SCR over-temperature detection
- Shorted SCR detection
- Across-the-line start for emergency situations

Built-in power monitoring, fault logging and communications

- Last 15 fault types are recorded (overload, voltage/current loss/unbalance, etc.)
- Fault counter: stores how many times each fault type has occurred (Up to 255)
- Logs changes to parameter settings (e.g. overload, OV/UV)
- All power condition values are displayed
- Built-in RS-485 for Modbus RTU communication

Industrial grade construction

- Door mounted HOA switch
- UL/NEMA Type 3R outdoor rating (4, 4X Available)
- Multi-tap transformer accommodates common voltages; no fuses required
- 120V control power for field devices (optional 24V)
- NEMA rated contactor, 2.5 Million electrical cycles at full rated current

Programmable control options

- Auto-restart
- Backspin delay
- On/Off delay settings
- Minimum run time based on last input
- 12-120V auto run input terminal for remote start/stop
- Dry contact input terminal for remote start/stop
- Analog input for (selectable) 0-10V, 4-20mA, 10k Thermistor, viewable as a Modbus point

Optional circuit breaker disconnect.

- UL 489 circuit breaker provides branch and short circuit protection
- No fuses required
- Lockable handle for safety

< The internal keypad and LCD make the IMS intuitive and versatile. Parameters are easily changed and faults are clearly displayed.

< Standard control features include a 12-120V auto run input, shutdown terminal for applications such as a low level float switch, and more.

< Our multi-tap power transformer accepts inputs of: 200V, 230V, 460V

Ordering and Sizing Information

UL/NEMA TYPE 3R OUTDOOR ENCLOSURE
COMBINATION INTELLIGENT MOTOR SOFT STARTER - 3-Phase, 200–460VAC

200 V - 460 V 3-Phase SFA Range** (A)	Max. 3-PHASE HP (UL) / Max. Amps						Contactor NEMA Size	IMS-RV Part Number
	200V		230V		460V			
	HP	Amps	HP	Amps	HP	Amps		
6~8	2	8	2	8	5	8	1	IMS3R-RV-S1/J-G15
8~11	3	11	3	11	7.5	11		IMS3R-RV-S1/J-G20
11~17	3	17	5	17	10	17		IMS3R-RV-S1/J-G30
16~22	5	22	7.5	22	15	22		IMS3R-RV-S1/J-G40
20~28	7.5	28	10	28	20	28	1P	IMS3R-RV-S1P/J-G50
24~34	10	34	10	34	25	34		IMS3R-RV-S1P/J-G60
32~45	10	45	15	45	30	45	2	IMS3R-RV-S2/J-G80
40~57	15	57	20	57	40	57	3	IMS3R-RV-S3/J-G100
50~71	20	71	25	71	50	71		IMS3R-RV-S3/J-G125
60~85	25	85	30	85	60	85	3P	IMS3R-RV-S3P/J-G150
80~114	30	114	40	114	75	114	4	IMS3R-RV-S4/J-G200
100~DPV*	40	120	50	130	100	124		IMS3R-RV-S4/J-G250
100~142	40	142	50	142	100	142	5	IMS3R-RV-S5/J-G250
120~170	50	170	50	171	125	171		IMS3R-RV-S5/J-G300
160~220	60	220	75	220	150	220		IMS3R-RV-S5/J-G400
201~285	100	285	100	285	200	285		IMS3R-RV-S5/J-G500
240~320	100	330	100	330	250	330		IMS3R-RV-S5/J-G600

UL/NEMA TYPE 3R OUTDOOR ENCLOSURE
STANDARD INTELLIGENT MOTOR SOFT STARTER - 3-Phase, 200–460VAC

200 V - 460 V 3-Phase SFA Range** (A)	Max. 3-PHASE HP (UL) / Max. Amps						Contactor NEMA Size	IMS-RV Part Number
	200V		230V		460V			
	HP	Amps	HP	Amps	HP	Amps		
1~50	15	50	15	50	30	50	2	IMS3R-RV-S2/J-50
1~85	25	85	30	85	77	85	3	IMS3R-RV-S3P/J-85
50~DPV*	40	120	50	130	100	124	4	IMS3R-RV-S4/J-130
50~170	50	170	60	170	125	170	5	IMS3R-RV-S5/J-170
151~220	60	220	75	220	150	220		IMS3R-RV-S5/J-220
176~270	75	270	100	270	200	270		IMS3R-RV-S5/J-270
201~330	100	330	125	330	250	330		IMS3R-RV-S5/J-330

Dimensions

**All measurements in inches*

IMS-RV (Combination)

Starter Size	H	W	D
S1 ~ S3P	32	15	10
S4	36	24	12
S5/J-G200 ~ S5/J-G400	42	30	12
S5/J-G500 ~ S5/J-G600	48	30	16

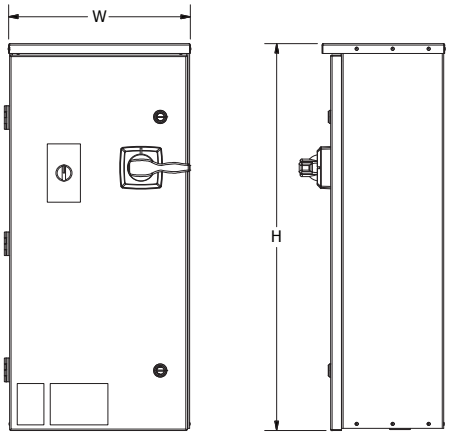

IMS-RV (Standard)

Starter Size	H	W	D
S2 ~ S3P	32	15	10
S4	36	24	12
S5	42	30	12

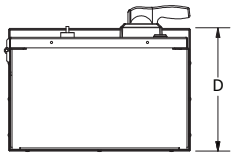

IMS-RV Options

Options	
IMS-SRG240	Surge Suppressor, 200/230 V
IMS-SRG480	Surge Suppressor, 460 V
IMS-SRG600	Surge Suppressor, 600 V
IMS-RPL	Run Pilot Light, Green
IMS-FPL	Fault Pilot Light, Red
IMS-SPB	Start Push-Button Control
IMS-STSP	Start/Stop Push-Button Control (In Lieu of Hand/Off/Auto Switch)
IMS-24	24 VAC Control Circuit (In Lieu of 120 VAC Control Circuit)

IMS-RV Wiring Diagram

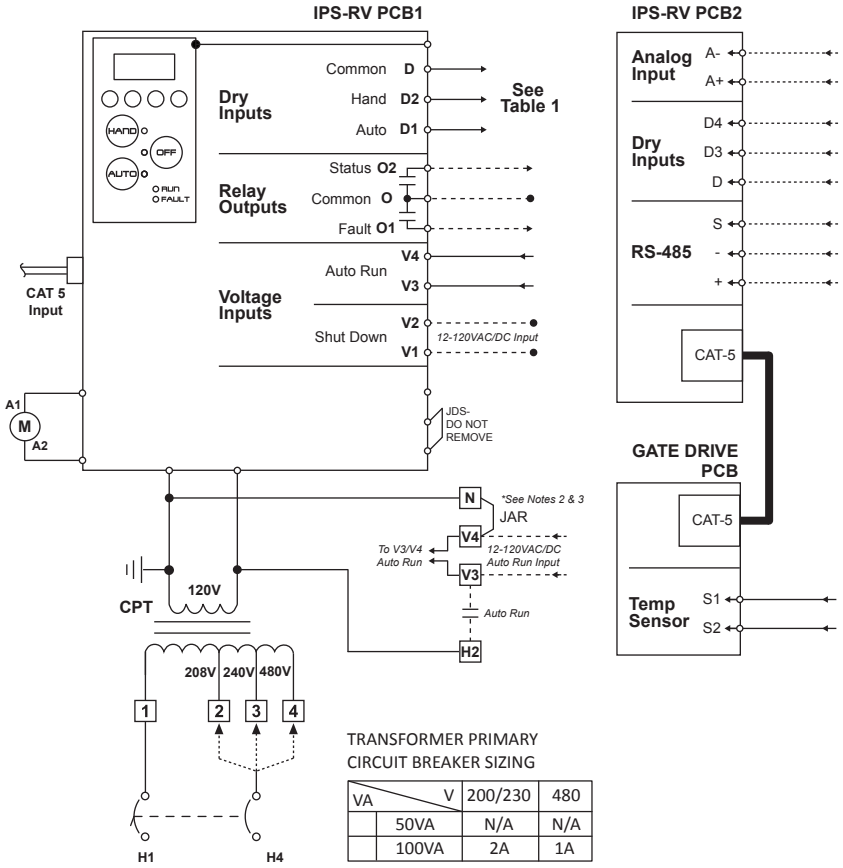

TRANSFORMER PRIMARY CIRCUIT BREAKER SIZING

VA \ V	200/230	480
50VA	N/A	N/A
100VA	2A	1A

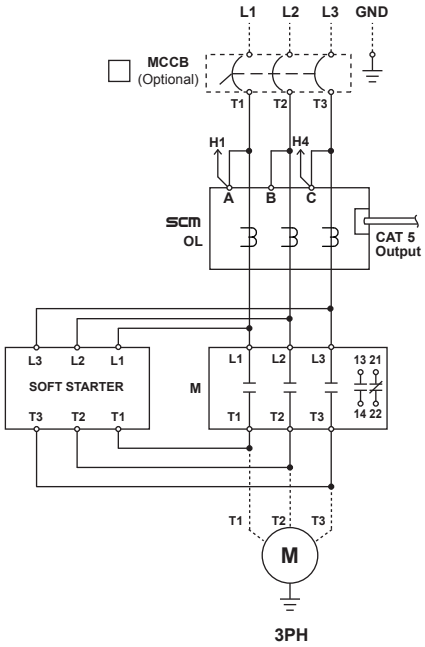

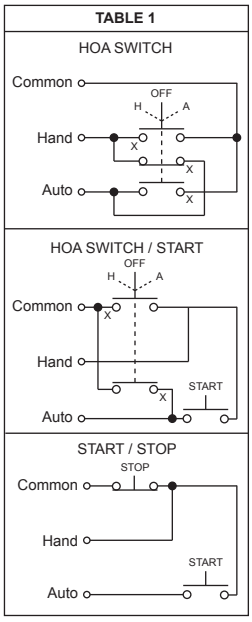

NOTES:

1. DASHED LINES INDICATE FIELD WIRING
2. WHEN JUMPER JAR IS PRESENT, TERMINALS V3 & H2 ACT AS CONNECTIONS FOR A NORMALLY OPEN, DRY CONTACT, AUTO RUN INPUT.
3. REMOVE JUMPER JAR TO USE V3 & V4 TERMINALS AS A VOLTAGE, AUTO RUN INPUT. APPLY 12~120VAC/DC TO ENERGIZE

Specifications

Starter Type
IMS-RV - Intelligent Motor Soft-Starter
Standard or Combination - Service Rated
UL /NEMA Type 3R Enclosed

User Interface	
Keypad with display screen	Internal
Hand-Off-Auto Switch	Door mounted

Standard Control Operations		
Inputs	Voltage Auto	Accepts 12-130VAC/DC. Applying voltage will send a run command to the starter when in Auto mode.
	Dry Contact Auto	Normally Open dry contact. When closed, the starter will be commanded to run when in Auto mode.
	Shutdown	Accepts 12-130VAC/DC. Applying voltage will open the contactor and the starter will not accept a run command Hand/Off/Auto LEDs will flash
	RS-485	Modbus RTU slave
	Analog	Selectable: 0-10V, 4-20mA, 10k Thermistor, viewable as a Modbus point
Outputs	Status Relay	Normally Open relay contact, 0.3A @ 125VAC, 1A @ 24VAC
	Fault Relay	Normally Open relay contact, 0.3A @ 125VAC, 1A @ 24VAC
Operational	Overload Type	Electronic, I2t trip curve
	Power Fail	Restart in last mode (Hand/Off/Auto) with no delay (default)
		Restart in Off mode
		Restart in Off mode if power failure lasts longer than 2 seconds. Restart in last mode if power failure is less than 2 seconds.
	On/Off Delay	On/Off, Adjustable: 0.1-99 seconds
	Fault Reset	Adjustable: Manual or Automatic (default differs per motor protection feature)
	Starts	6/hour, 20 seconds max. start time @ 400% FLA, 30 seconds max. start time @ 300% FLA

Environmental		
Ambient Operating Temp	-5° to 140° F (-20° to 60° C)	
Ambient Storage Temp	-5° to 185° F (-20° to 85° C)	
Relative Humidity	5% to 95% non-condensing (NEMA 1)	

Motor Protection	Adjustment/Description	Default Setting
Overload Current Setting Range	Differs per model	Per Amps
Overload Trip Class	Adjustable: 5-30	10
Overload Service Factor	Adjustable: 0.00-2.00	1.15
Over Power	On/Off, Adjustable: 101-200% of measured electrical input	On / 120%
Over / Under Voltage	On/Off, Adjustable: +5-25% over/under the nominal voltage setting	On / 10%
Voltage Phase Unbalance	On/Off, Adjustable: 1-20% voltage phase deviation	On / 3%
Voltage Phase Loss	Always On, Adjustable: 1-50% voltage phase deviation	On
Voltage Phase Sequence Reversal	On/Off, Trips within 0.1 seconds upon voltage phase reversal detection	On
Ground Fault (UL 1053 Certified)	On/Off, Adjustable: 1.0-9.9A	On / 1A
Cycle Fault	On/Off, Adjustable: Trip if cycle rate exceeds 20 starts/minute	On
Warm Start Provision	On/Off, Delays motor restart based on calculated motor temperature	On
Current Phase Unbalance	On/Off, Adjustable: 1-50% current phase unbalance	On / 5%
Locked Rotor / Stall	On/Off, Trips within 0.5 seconds	On
Shorted SCR	Always On: Trips upon detection of a shorted SCR or no motor	On
Open SCR	Always On: Trips if no current is detected during start-up or bypass	On
SCR Over-Temperature	Always On: Trips if the SCR temperature reaches 125oC	On
Across-the-Line Start	On/Off: Allows the user to start the motor across-the-line. (Turns soft starter into standard IPS)	On

Pilot Devices & Accessories

Fits 22mm Mounting Patterns
UL Type 1, 12, 3R, 4 & 4X

Selector Switches

	Type	Part Number
2-Position	Stay Put	CB2-BD2
	Spring Return	CB2-BDR2
3-Position	Stay Put	CB2-BD3
	Spring Return	CB2-BDR3
	Spring Return (R to C)	CB2-BD8
	Spring Return (L to C)	CB2-BD7

Key Switches

	Type	Part Number
2-Position	Stay Put	CB2-BG4
3-Position	Stay Put	CB2-BG0

** Key is removable in all positions*

Non-Illuminated Pushbuttons

	Type	Color	Part Number
	Flush Momentary	White	CB2-BA1
		Black	CB2-BA2
		Green	CB2-BA3
		Red	CB2-BA4
	Projecting Momentary	White	CB2-BL1
		Black	CB2-BL2
		Green	CB2-BL3
		Red	CB2-BL4
	Reset*	Black (Electrical)	CB2-BA2-RST

	Type	Style	Part Number
	Emergency Stop (Red, 40mm)	Turn Release	CB2-BS44
		Key Release	CB2-BS14
		Push/Pull	CB2-BT4
	Dual head Start/Stop	Push Button	CB2-BA87

**Mechanical style reset utilizes CB2-RPX extension shaft and electrical style utilizes CB2-BZ contact block assembly.*

Legend Plates

	Description	Part Number
	Bypass	CB2-PY2300BYP
	Fwd-Auto-Rev	CB2-PY2300FAR
	Fault	CB2-PY2300FLT
	Fwd-Off-Rev	CB2-PY2300FOR
	Low-Auto-High	CB2-PY2300LAH
	M1-Auto-M2	CB2-PY2300MAM
	M1-Off-M2	CB2-PY2300MOM
	Off-Auto	CB2-PY2300OFA
	Run	CB2-PY2300RUN
	VFD-Off-Bypass	CB2-PY2300VFD
	Start	CB2-PY2303
	Forward	CB2-PY2305
	Up	CB2-PY2307
	On	CB2-PY2311
	Open	CB2-PY2313
	Auto	CB2-PY2315
	Reset	CB2-PY2323
	Slow	CB2-PY2327
	Auto-Hand	CB2-PY2364
	Stop	CB2-PY2304
	Reverse	CB2-PY2306
	Down	CB2-PY2308
	Off	CB2-PY2312
	Close	CB2-PY2314
	Hand	CB2-PY2316
	Inch	CB2-PY2321
	Fast	CB2-PY2328
	Hand-Off-Auto	CB2-PY2387
	Low	CB2-PY2333
	High	CB2-PY2334
	High-Low	CB2-PY2335
	Off-On	CB2-PY2336
	Up-Down	CB2-PY2338
	Emergency Stop (60mm)	CB2-PY9330
	Emergency Stop (90mm)	CB2-PY8330

Complete Station - Start/Stop Spring Return

Meets UL Type 1, 12, 3R, 4 & 4X Ratings

Rugged Design

Convenient standard knockouts for easy installation

	Description	Part Number
	Plastic Control Station	**CC2P-215**
	Metal Control Station	**CC2M-215**

E-Stop Station

	Description	Part Number
	Keyed to Release Station	**CC-1PBS142**
	Pull to Release Station	**CC-1PBT42**

Compact Pilot Lights

	Color	Part Number
	Green	**CB2-B7-IV-73***
	Red	**CB2-B7-IV-74***
	Amber	**CB2-B7-IV-75***

** Select desired voltage from table upon ordering 12, 24, 110, 240*

Voltage Selection Chart

AC Voltage	24VAC	110VAC	240VAC
DC Voltage	12VDC	24VDC	

Miscellaneous Accessories

	Description	Part Number
	Attachment Collar	**CB2-B**
	Spare/Replacement Keys	**CB2-K455**
	Padlockable Cover	**CB2-BZ6**
	5.125"/130.18mm plastic shaft reset plunger (can be trimmed to any length)	**CB2-RPX**

Assemblies for Selector Switches & Pushbuttons

	Contact	Part Number
Contact Block & Collar	1 NO	**CB2-BZ101**
	1 NC	**CB2-BZ102**
	2 NO	**CB2-BZ103**
	2 NC	**CB2-BZ104**
	1 NO & 1 NC	**CB2-BZ105**
Additional Contact Blocks (Max 6)	1 NO	**CB2-BE101**
	1 NC	**CB2-BE102**

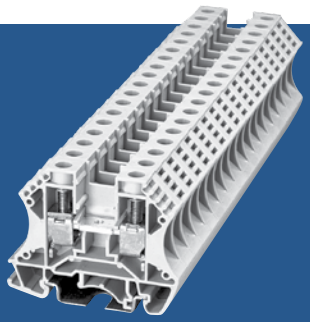

DIN Rail Mountable Terminal Blocks

25~230A at 600VAC
Accepts Wire Size 22~4/0 AWG
Compatible with 32mm & 35mm DIN rails

Specifications

- Increased conductivity and corrosion prevention through use of electrolytic copper conductors
- Screws and fasteners are made of high carbon steel to withstand higher torque
- Steel wirecase for tight connections and vibration resistance
- Large contact points for reliable connections
- Optional pre-printed terminal block markers (standard numeric or custom marking available)

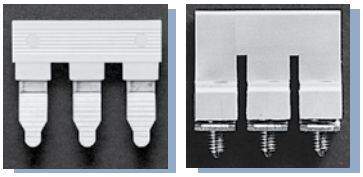

Choose between cage inserted (left) or central type (right) jumpers.

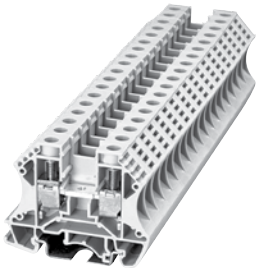

DK Series - Screw Clamp Connection

Part Number	Rated Current	Rated Surge Voltage (kV)	Solid Wire (AWG)	Stranded Wire (AWG)	Wire Strip Length (in)	Torque (lb-in)	Screw	Dimensions H x W x T (in)
DK2.5	25A	2.2	22~12	22~12	0.39~0.47	7	M3	0.20 x 1.87 x 2.32
DK4	35A	2.2	22~10	22~10	0.39~0.47	7	M3	0.24 x 1.87 x 2.32
DK6	45A	2.2	20~8	20~8	0.31	15.6	M4	0.31 x 1.87 x 2.32
DK10	60A	2.2	20~6	20~6	0.47~0.55	15.6	M4	0.39 x 1.87 x 2.32
DK16H	70A	2.2	14~6	14~6	0.59~0.67	30.4	M5	0.47 x 2.50 x 2.32
DK35H	115A	2.2	12~2	12~2	0.63~0.71	50	M6	0.63 x 2.50 x 2.32
DK50	150A	2.2	6~2(105A)	6~1/0	0.98~1.18	50	M6	0.79 x 3.02 x 2.78
DK95	230A	2.2	2~4(100A)	2~4/0	1.18~1.34	90	M8	0.98 x 3.48 x 3.15

Terminal Block Accessories

Model	End Cover	End Bracket	Cross Jumper			Terminal Markers*
			Central Type		Cage Inserted	
			2-Pole	3-Pole	2-Pole	
DK2.5	**DK2.5C**	**SS4**	**DS2.5-02P**	**DS2.5-03P**	**CSC-2.502P**	**TM26**
DK4		**SS4**	**DS4-02P**	**DS4-03P**	**CSC-402P**	**TM37**
DK6		**SS7**	**DS6-02P**	**DS6-03P**	**CSC-602P**	**TM27**
DK10		**SS7**	**DS10-02P**	**DS10-03P**	**CSC-1002P**	**TM28**
DK16H	**DK16HC**	**SS6**	**DS16-02P**	**DS16-03P**	-	**TM28**
DK35H		**SS6**	**DS35-02P**	-	-	**TM28**
DK50	-	**SS6**	-	-	-	**TM28**
DK95	-	**SS6**	-	-	-	**TM28**

**Specify numeric label range or custom values when ordering*

GK Series - Grounding Terminal Blocks

Part Number	Rated Current	Rated Surge Voltage (kV)	Solid Wire (AWG)	Stranded Wire (AWG)	Wire Strip Length (in)	Torque (lb-in)	Screw	Dimensions H x W x T (in)
DK2.5-PE	25A	2.2	26~12	26~12	0.39~0.55	6.9	M3	0.22 x 1.83 x 2.20
DK4-PE	35A	2.2	26~10	26~10	0.47~0.63	6.9	M3	0.26 x 1.83 x 2.20
DK10-PE	50A	2.2	16~8	16~8	0.47~0.63	15.6	M4	0.41 x 1.83 x 2.20
DK16-PE	65A	-	14~6	14~6	0.55~0.71	30.4	M5	0.47 x 2.46 x 2.20

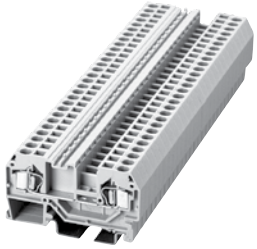

SK Series - Spring Clamp Connection

Part Number	End Cover	Terminal Markers	Rated Current	Rated Surge Voltage (kV)	Solid Wire (AWG)	Stranded Wire (AWG)	Wire Strip Length (in)	Dimensions H x W x T (in)
AK4	**AK4C**	**TM37**	20A	2.2	28~12	28~12	0.39~0.55	1.30 x 2.32 x 0.24
AK4-TR	**AK4C-TR**	**TM37**	20A	2.2	28~12	28~12	0.39~0.55	1.30 x 3.39 x 0.24

Miniature Circuit Breakers

1~10A at 460VAC
Thermal-magnetic Release
1, 2 & 3-Pole Models

High Value, Supplemental Circuit Breaking

- D-curve magnetic trip point (10x rated current) provides quick response short circuit protection
- UL 1077 listed, supplemental overcurrent protection for situations where UL 489 branch protection is already provided or unnecessary
- Ideal for highly inductive loads or transformers
- IP20 finger safe design and 35mm DIN-rain mountable

Mini Circuit Breakers - D-Curve Magnetic Trip (6kA @ 400VAC)

Amps		Part Number		Part Number		Part Number
1	1-Pole	CI-MCB-D/1P-1A	2-Pole	CI-MCB-D/2P-1A	3-Pole	CI-MCB-D/3P-1A
2		CI-MCB-D/1P-2A		CI-MCB-D/2P-2A		CI-MCB-D/3P-2A
3		CI-MCB-D/1P-3A		CI-MCB-D/2P-3A		CI-MCB-D/3P-3A
4		CI-MCB-D/1P-4A		CI-MCB-D/2P-4A		CI-MCB-D/3P-4A
6		CI-MCB-D/1P-6A		CI-MCB-D/2P-6A		CI-MCB-D/3P-6A
10		CI-MCB-D/1P-10A		CI-MCB-D/2P-10A		CI-MCB-D/3P-10A
16		CI-MCB-D/1P-16A		CI-MCB-D/2P-16A		CI-MCB-D/3P-16A
20		CI-MCB-D/1P-20A		CI-MCB-D/2P-20A		CI-MCB-D/3P-20A
25		CI-MCB-D/1P-25A		CI-MCB-D/2P-25A		CI-MCB-D/3P-25A
32		CI-MCB-D/1P-32A		CI-MCB-D/2P-32A		CI-MCB-D/3P-32A
40		CI-MCB-D/1P-40A		CI-MCB-D/2P-40A		CI-MCB-D/3P-40A
50		CI-MCB-D/1P-50A		CI-MCB-D/2P-50A		CI-MCB-D/3P-50A
63		CI-MCB-D/1P-63A		CI-MCB-D/2P-63A		CI-MCB-D/3P-63A

WELD ON PITLESS ADAPTER

C USA
NSF / ANSI 372
LEAD FREE

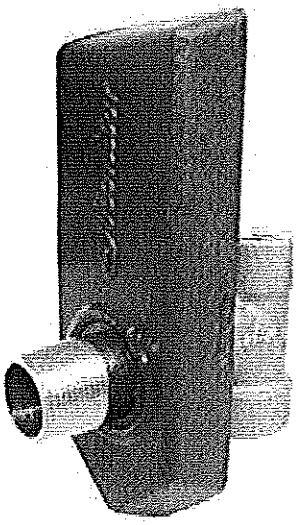

Am
10/22/15

Weld on tear drop designed bottom for easy welding onto a steel casing in 8", 10" and 12" I.D. well sizes.

8123BEZLF Pitless Adapter Pressure Drop Test (using an 80 GPM pump to supply water flow)			
Flow Rate (GPM)	Inlet Pressure (psi)	Outlet Pressure (psi)	Pressure Drop (psi)
40	4	3	1
60	5.5	4.5	1
80	8.5	7	1.5

8-20-2002 Data

PDF Created with deskPDF PDF Writer - Trial :: http://www.docudesk.com

WELD ON PITLESS ADAPTERS

WELD ON PITLESS ADAPTER FOR 8", 10" & 12" WELLS

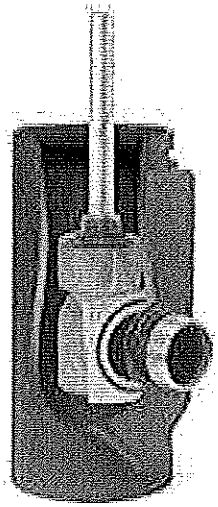

FEATURES

- Durable fabricated steel housing - brass elbow, stainless steel discharge, large drain hole in the pull pipe port, 3" FIP pull pipe, 3" FIP drop pipe, 3" stainless steel MIP discharge and large O-ring seal.
- Designed to be welded onto 8", 10" and 12" I.D. steel casing.
- Designed for shallow or deep settings and high working pressures up to 300 PSI.
- Durable steel housing with tear drop design for EZ bottom welding.
- Water contacts only 304 stainless steel and brass elbow for long term corrosion protection.
- No obstruction in the casing I.D. when the brass elbow is removed.
- Stainless steel 10° tapered slip fitting design on the elbow for easy installation and removal at time of servicing.
- Large O-ring neoprene seal.
- Large drain hole in the 3" FIP pull pipe port.
- Designed for 10,000 lbs. load.
- Also available factory welded to casing.

RCS 10/22/15

Weld On Pitless Adapter				
Order No.	Well Size	Drop Pipe Size	Discharge Size	Weight (lbs.)
8123BEZLF	8", 10", 12" I.D.	3" Female NPT	3" Male NPT	27
83BEZLF	Kit for 8" x 18" L.	3" Female NPT	3" Male NPT	75
83BEZ6LF	Kit for 6"	3" Female NPT	3" Male NPT	90
103BEZLF	Kit for 10" x 18" L.	3" Female NPT	3" Male NPT	95
123BEZLF	Kit for 12" x 18" L.	3" Female NPT	3" Male NPT	115
8123BEZ6LF	8"-12" w/nipple 6" L.	3" Female NPT	3" Male NPT	30

Baker Manufacturing Co., LLC/Monitor Division • Evansville, WI 53536
Phone: 800-356-5130 • Fax: 608-882-3777 • Website: bakermonitor.com
PDF Created with deskPDF PDF Writer - Trial :: http://www.docudesk.com

WELD ON PITLESS ADAPTERS

WELD ON PITLESS ADAPTER FOR 8", 10" & 12" WELLS

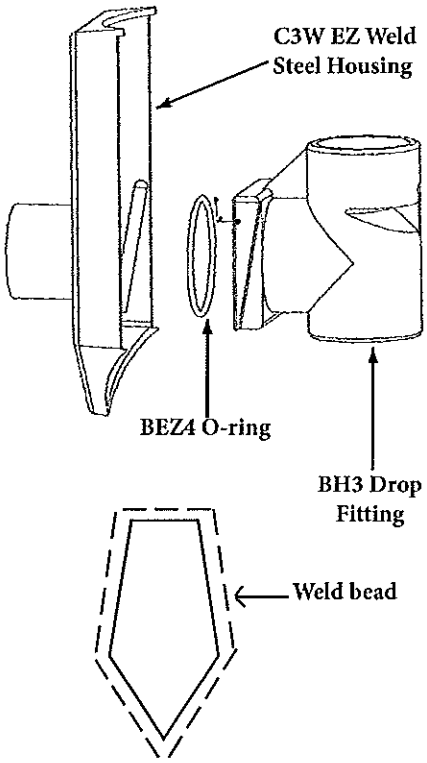

INSTALLATION INSTRUCTIONS

- Locate the template (provided) over the installation location on the steel pipe where you want to install the Monitor EZ Weld Pitless Adapter.
- Center punch at points A on the template.
- Connect all A points with A lines.
- Flame cut over lines. Note: Cut must be parallel with center line of pipe.
- After opening has been cut, pry out the cut casing at the bottom corner.
- BH3 drop fitting must fit through the cut hole.
- Clean off all slag and burrs on the cut casing opening. Place the C3W EZ weld steel housing onto the opening. Tac the corners to hold the steel housing in place. Weld the top and sides to the steel casing. Note: See diagram.

10/22/15

8123BEZLF Pitless Adapter Pressure Drop Test (using an 80 GPM pump to supply water flow)			
Flow Rate (GPM)	Inlet Pressure (psi)	Outlet Pressure (psi)	Pressure Drop (psi)
40	4	3	1
60	5.5	4.5	1
80	8.5	7	1.5

8-20-2002 Data

Baker Manufacturing Co., LLC/Monitor Division • Evansville, WI 53536
Phone: 800-356-5130 • Fax: 608-882-3777 • Website: bakermonitor.com

PDF Created with deskPDF PDF Writer - Trial :: http://www.docudesk.com

Simmons

CERTIFIED LEAD FREE Ductile Iron Check Valve

NSF/ANSI 372

- ASTM A536 Ductile iron body. • Silicon bronze poppet.
- Stainless steel spring and nut. • Non-toxic polyester powder coat paint.

Standard Stemmed Poppet Check Valve

Stemmed Part No.	Size	Wt.Ea. lbs.	Ctn Qty
653SB	1	1.3	1
654SB	1-1/4	1.7	1
655SB	1-1/2	2.1	1
680SB	2	3.5	1
669SB	2-1/2	15.3	1
670SB	3	11.7	1
681SB	3*	13.1	1
671SB	4	21.5	1
674SB	5	33.7	1
672SB	6	44.5	1
683SB	6*	60.2	1
673SB	8	63.7	1
689SB	10	110.0	1

* High Flow Design

Stemless Poppet Check Valve

Stemless Part No.	Size	Wt.Ea. lbs.	Ctn Qty
2653SB	1	1.3	1
2654SB	1-1/4	1.7	1
2655SB	1-1/2	2.1	1
2680SB	2	3.5	1
-	2-1/2	15.3	1
-	3	11.7	1
2681SB	3*	13.1	1
2671SB	4	21.5	1
2674SB	5	33.7	1
-	6	44.5	1
2683SB	6*	60.2	1
-	8	63.7	1
-	10	110.0	1

* High Flow Design

CERTIFIED LEAD FREE Ductile Iron Check Valve with Break-off Plug

NSF/ANSI 372

- 1/2" Break-off plug standard. • 3/8" Break-off plug optional.

Check Valve (with Break-off Plug)

Stemmed Part No.	Size	Wt.Ea. lbs.	Ctn Qty
668SB	2-1/2	15.3	1
675SB	3	12.3	1
685SB	3*	13.4	1
676SB	4	21.3	1
679SB	5	34.0	1
677SB	6	44.7	1
687SB	6*	60.4	1
678SB	8	64.0	1
690SB	10	110.3	1

* High Flow Design

Stemless Check Valve (with Break-off Plug)

Stemless Part No.	Size	Wt.Ea. lbs.	Ctn Qty
-	2-1/2	15.3	1
-	3	12.3	1
2685SB	3*	13.4	1
2676SB	4	21.3	1
2679SB	5	34.0	1
-	6	44.7	1
2687SB	6*	60.4	1
-	8	64.0	1
-	10	110.3	1

* High Flow Design

CERTIFIED LEAD FREE Break-off Plug Only

- 303 Stainless steel.
- The break-off plug, when manually broken, allows water to drain from drop pipe before removal of pump.

Part No.	Size	Total Length	Wt.Ea. lbs.	Carton Quantity
4061	1/2	3.12	.5	1
4068	3/8	3.0	.4	1
4069**	1/2	6.0	.8	1

** For 8 & 10" Valves

*Silicon bronze components contain less than .05% (1/20 of 1%) Lead.

Check Valves furnished with Buna-N O-Ring, stainless steel spring, stainless steel washer, and stainless steel locknut. All valves 3/4" through 1-1/2" have a working pressure of 400 psi. All valves 2" and larger have a working pressure of 600 psi.

MADE IN U.S.A.

Founded 1882 PHOENIX ®
Commanding a Higher Standard SM

THE PHOENIX FORGE GROUP

1020 MACARTHUR ROAD, READING, PA 19605-9404
(610) 374-3117 • FAX: (610) 374-5211
www.phoenixforge.com

PRODUCT SPECIFICATION BULLETIN

CERTIFICATE of COMPLIANCE

COUPLINGS - API LINE

We hereby certify that the 1/8" through 12" API line couplings manufactured by Capitol Manufacturing conform to the requirements of the latest edition of API 5L. These products conform to the applicable metallurgical and hardness requirements of requirements of NACE MR0175, NACE MR0103, and ISO 15156 and do not exceed a Rockwell hardness of C-22 or a Brinnell hardness of 187 HBW maximum.

Dimensions: API line couplings conform to the dimensional requirements of API 5L.

Threads: The threads of API line couplings conform to API Standard 5B.

Material: API line couplings conform to the mechanical requirements of API 5L Grade "B" PLS 1.

Marking:
API line couplings sizes 1/8" through 3/8" are marked "∅".
API line couplings sizes 1/2" through 1" are marked "∅, SPEC 5L".
API line couplings sizes 1-1/4" through 1-1/2" are marked "∅, SPEC 5L, Heat Code".
API line couplings sizes 2" through 12" are marked "Cap Logo, API License Number, API Monogram, Date of Mfg., Size, B, PLS1, Heat Code".

Surface Finish:
Black Couplings: Zinc phosphate coated with light, dry to touch oil supplied as standard.
Galvanized Couplings: Electro-zinc plated per ASTM B633, Type III, SC2.

These products are manufactured in accordance with the Capitol Manufacturing and Phoenix Forging Company Certified Quality System Program conforming to ISO 9001:2008. These products are inspected by independent quality control personnel conforming to the requirements of EN 10204 Section 3.1B. These products were not exposed to mercury or any other metal alloy that is liquid at ambient temperatures during processing or while in our possession.

Bulletin: B-05.00 Rev. 6 Date: 08/01/11 Approved: Guy Cuccio Title: Technical Services Mgr.

Founded 1882
PHOENIX ®
Commanding a Higher Standard SM

THE PHOENIX FORGE GROUP

1020 MACARTHUR ROAD, READING, PA 19605-9404
(610) 374-3117 • FAX: (610) 374-5211
www.phoenixforge.com

PRODUCT SPECIFICATION BULLETIN

CERTIFICATE of COMPLIANCE

WORKING PRESSURES - API LINE and EXTRA HEAVY COUPLINGS

We hereby certify that the following API line and extra heavy non-recessed AAR couplings manufactured by Capitol Manufacturing will withstand the cold non-shock working pressures at ambient temperatures as listed below:

SIZE	COLD NON-SHOCK WORKING PRESSURE
1/8" - 1"	600 psi
1-1/4" - 2"	400 psi
2-1/2" - 4"	350 psi
5" – 12"	300 psi

We further certify that these products are manufactured and inspected in the United States of America. These products are produced in accordance with the Capitol Manufacturing and The Phoenix Forge Groups ISO 9001:2008 Certified Quality System Program.

These products are inspected by independent quality control personnel conforming to the requirements of EN 10204 Section 3.1B. These products were not exposed to mercury or any other metal alloy that is liquid at ambient temperatures during processing or while in our possession.

Bulletin: B-21.00 Rev. 6 Date: 08/01/11 Approved: Guy Cuccio Title: Technical Services Mgr.

Tags LT-4001
LT-5001

In-Situ

Innovations in **Water Monitoring**

Spec Sheet

Level TROLL® 400, 500 & 700 Data Loggers

Get water level data the way you want it, when you want it with industry-leading water level/pressure and temperature data loggers. By partnering with In-Situ, you receive durable Level TROLL® Data Loggers that provide years of service, accurate results, intuitive software, and real-time functionality.

Be Effective

- **Increase productivity:** Reduce training and installation time with In-Situ intuitive software platform and integrated components. Patented twist-lock connectors, included on Level TROLL Loggers and RuggedCable® Systems, ensure error-free deployments.
- **Streamline analysis and reporting:** Automate water level corrections and post-processing, graph data, and accelerate report generation with Win-Situ® Software. Easily export data to Excel,® a web-based management service, or data analysis software.
- **Set up real-time networks:** Access data 24/7 and receive event notifications when you connect data loggers to Tube and Cube systems, radios, or other third-party data collection platforms. Get decision quality data when, where, and how you need it with HydroVu Data Services. Control gates, pumps, alarms, and other equipment by using built-in Modbus/RS485, SDI-12, or 4-20 mA communication protocols.

Be Reliable

- **Deploy in all environments:** Install loggers in fresh water, saltwater, and contaminated waters. Solid titanium and sealed construction outperforms and outlasts coated data loggers.
- **Log accurate data:** Get optimal accuracy under all operating conditions. Sensors undergo NIST®-traceable factory calibration across the full pressure and temperature range. For applications requiring the highest levels of accuracy, use a vented (gauged) system.
- **Get long-lasting operation:** Reduce trips to the field with low-power loggers that typically operate for 10 years.

Be In-Situ

- Receive **free**, 24/7 technical support and online resources.
- Order data loggers and accessories from the In-Situ website.
- Get guaranteed 7-day service for maintenance (U.S.A. only).

Applications

- **Aquifer characterization: slug tests & pumping tests**
- **Coastal: tide/harbor levels & wetland/estuary research**
- **Hydrologic events: crest stage gages, storm surge monitoring, & flood control systems**
- **Long-term, real-time groundwater & surface water monitoring**
- **Mining & remediation**

CALL OR CLICK TO PURCHASE OR RENT

1-800-446-7488 (toll-free in U.S.A. and Canada)
1-970-498-1500 (U.S.A. and international)

WWW.IN-SITU.COM

General	Level TROLL 400	Level TROLL 500	Level TROLL 700	Level BaroTROLL
Temperature ranges[1]	Operational: -20-80° C (-4-176° F) Storage: -40-80° C (-40-176° F) Calibrated: -5-50° C (23-122° F)	Operational: -20-80° C (-4-176° F) Storage: -40-80° C (-40-176° F) Calibrated: -5-50° C (23-122° F)	Operational: -20-80° C (-4-176° F) Storage: -40-80° C (-40-176° F) Calibrated: -5-50° C (23-122° F)	Operational: -20-80° C (-4-176° F) Storage: -40-80° C (-40-176° F) Calibrated: -5-50° C (23-122° F)
Diameter	1.83 cm (0.72 in.)	1.83 cm (0.72 in.)	1.83 cm (0.72 in.)	1.83 cm (0.72 in.)
Length	21.6 cm (8.5 in.)	21.6 cm (8.5 in.)	21.6 cm (8.5 in.)	21.6 cm (8.5 in.)
Weight	197 g (0.43 lb)	197 g (0.43 lb)	197 g (0.43 lb)	197 g (0.43 lb)
Materials	Titanium body; Delrin® nose cone	Titanium body; Delrin nose cone	Titanium body; Delrin nose cone	Titanium body; Delrin nose cone
Output options	Modbus/RS485, SDI-12, 4-20 mA	Modbus/RS485, SDI-12, 4-20 mA	Modbus/RS485, SDI-12, 4-20 mA	Modbus/RS485, SDI-12, 4-20 mA
Battery type & life[2]	3.6V lithium; 10 years or 2M readings	3.6V lithium; 10 years or 2M readings	3.6V lithium; 10 years or 2M readings	3.6V lithium; 10 years or 2M readings
External power	8-36 VDC	8-36 VDC	8-36 VDC	8-36 VDC
Memory	2.0 MB	2.0 MB	4.0 MB	1.0 MB
Data records[3] *Data logs*	130,000 50 logs	130,000 50 logs	260,000 50 logs	65,000 2 logs
Fastest logging rate	2 per second	2 per second	4 per second	1 per minute
Fastest output rate	Modbus: 2 per second SDI-12 & 4-20 mA: 1 per second	Modbus: 2 per second SDI-12 & 4-20 mA: 1 per second	Modbus: 2 per second SDI-12 & 4-20 mA: 1 per second	Modbus: 2 per second SDI-12 & 4-20 mA: 1 per second
Log types	Linear, Fast Linear, and Event	Linear, Fast Linear, and Event	Linear, Fast Linear, Linear Average, Event, Step Linear, True Logarithmic	Linear
Sensor Type/Material	**Piezoresistive; titanium**	**Piezoresistive; titanium**	**Piezoresistive; titanium**	**Piezoresistive; titanium**
Range	Absolute (non-vented) 30 psia: 11 m (35 ft) 100 psia: 60 m (197 ft) 300 psia: 200 m (658 ft) 500 psia: 341 m (1120 ft)	Gauged (vented) 5 psig: 3.5 m (11.5 ft) 15 psig: 11 m (35 ft) 30 psig: 21 m (69 ft) 100 psig: 70 m (231 ft) 300 psig: 210 m (692 ft) 500 psig: 351 m (1153 ft)	Absolute (non-vented) 30 psia: 11 m (35 ft) 100 psia: 60 m (197 ft) 300 psia: 200 m (658 ft) 500 psia: 341 m (1120 ft) 1000 psia: 693 m (2273 ft) Gauged (vented) 5 psig: 3.5 m (11.5 ft) 15 psig: 11 m (35 ft) 30 psig: 21 m (69 ft) 100 psig: 70 m (231 ft) 300 psig: 210 m (692 ft) 500 psig: 351 m (1153 ft)	30 psia (usable up to 16.5 psi; 1.14 bar)
Accuracy[4]	±0.05% full scale (FS) ±0.1% FS	±0.05% FS ±0.1% FS	±0.05% FS ±0.1% FS	±0.05% FS ±0.1% FS
Resolution	±0.005% FS or better	±0.005% FS or better	±0.005% FS or better	±0.005% FS or better
Units of measure	Pressure: psi, kPa, bar, mbar, mmHg, inHg, cmH20, inH20 Level: in., ft, mm, cm, m	Pressure: psi, kPa, bar, mbar, mmHg, inHg, cmH20, inH20 Level: in., ft, mm, cm, m	Pressure: psi, kPa, bar, mbar, mmHg, inHg, cmH20, inH20 Level: in., ft, mm, cm, m	Pressure: psi, kPa, bar, mbar, mmHg, inHg, cmH20, inH20
Temperature Sensor	**Silicon**	**Silicon**	**Silicon**	**Silicon**
Accuracy	±0.1° C	±0.1° C	±0.1° C	±0.1° C
Resolution	0.01° C or better	0.01° C or better	0.01° C or better	0.01° C or better
Units of measure	Celsius or Fahrenheit	Celsius or Fahrenheit	Celsius or Fahrenheit	Celsius or Fahrenheit
Warranty	**3 years**	**3 years**	**3 years**	**3 years**
Notes	[1] Temperature range for non-freezing liquids. [2] Typical battery life when used within the factory-calibrated temperature range. [3] 1 data record = date/time plus 2 parameters logged (no wrapping) from device within the factory-calibrated temperature range. [4] Across factory-calibrated pressure range. [5] Across factory-calibrated pressure and temperature ranges. [6] Up to 5-year (total) extended warranties are available for all sensors—call for details. Delrin is a registered trademark of E.I. du Pont de Nemours and Company. Specifications are subject to change without notice.			

Every Application & Budget

Use maintenance-free, non-vented systems for long-term monitoring and at flood-prone or high-humidity sites. Pair with Tube and Cube Telemtry System and HydroVu for automtatic barometric compensation.

Use high-accuracy, vented systems to conduct aquifer tests and to view barometrically compensated water level data in real time.

Forgot to set a level reference at the beginning of a deployment? Automate level corrections by using Win-Situ Software's post-level correction Wizard.

BaroTROLL® Data Logger

When using a non-vented system, collect barometric pressure and temperature data with a titanium BaroTROLL Data Logger in order to post correct data for barometric pressure fluctuations.

Calculating barometric efficiency? Use the BaroTROLL Logger with vented systems.

Copyright © 2013 In-Situ Inc. All rights reserved. Nov. 2015 (T3; 2K)

Tags LT-4000
LT-5000

In-Situ Inc.

Innovations in
Water Monitoring

In-Situ® RuggedCable® Systems

Durable, Direct-Read Cable

RuggedCable Systems are custom-built to endure harsh environments and to last for years. RuggedCable Systems include:

- Titanium twist-lock connectors for quick, reliable connections to instrument body, TROLL® Com Communication Device, desiccant, and other accessories (2-year warranty)
- Metal shield beneath the cable jacket to prevent electrical interferences
- Kellems® grip for secure instrument deployment
- Small desiccant for vented systems (only for storage)

Use RuggedCable Systems with:

- Aqua TROLL® 100, 200, and 400 Instruments
- BaroTROLL® Instruments
- Con TROLL® PRO System
- Level TROLL® 300, 500, and 700 Instruments
- RDO® PRO Probe (twist-lock models)
- TROLL® 9500 Water Quality Instruments
- TROLL® Link Telemetry Systems, MultiHop Radios, and TROLL® Net Hub

Customizable Cable

When ordering, consider the following options:

- **Vented or non-vented cable:** Vented cable is used with vented pressure/level sensors for gauged measurements. The cable vent tube ensures that atmospheric pressure is the reference pressure applied to the sensor diaphragm. Non-vented cable may be used with non-vented instruments for absolute measurements. Compensate absolute measurements with barometric pressure data by using a BaroTROLL® Instrument and Win-Situ® Baro Merge™ Software.
- **Jacket options:** Tefzel® (vented) or thermoplastic polyurethane (TPU; vented or non-vented)
- **Customized lengths:** Up to 1,219 m (4,000 ft) 600Ft Cable
- **Cable termination:** Twist-lock termination (female connector) on one or both cable ends. Other custom configurations are available—call for details.
- ~~**Cable reels:** Plastic or steel reel~~

Steel and plastic reels available

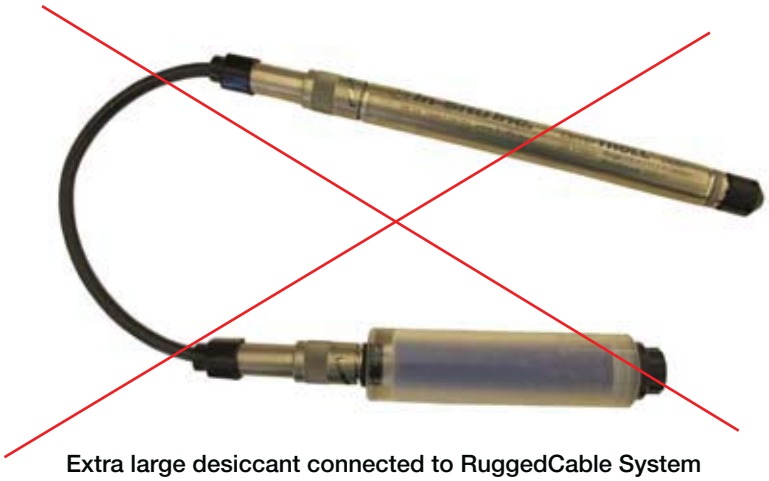

Extra large desiccant connected to RuggedCable System and Level TROLL Instrument

Titanium twist-lock connectors

In-Situ® RuggedCable® Systems

Specifications

Specifications	RuggedCable Systems
Operating temp. range	-25° to 80° C (-13° to 176° F)
Jacket options	• TPU (thermoplastic polyurethane) • Tefzel® (ETFE fluoropolymer; generic equivalent to Teflon®)
Vent options	• Non-vented (absolute) • Vented (gauged) with desiccant (used to mitigate moisture/humidity)
Conductors	6 conductors, 24 AWG, polypropylene insulation
Cable diameter	• TPU: 6.7 mm (0.265 in) • Tefzel: 6.35 mm (0.25 in)
Connector diameter	18. 5 mm (0.73 in)
Weight	• Non-vented, TPU: 16 kg/300 m (35.6 lbs/1,000 ft) • Non-vented, Tefzel: 14 kg/300 m (32 lbs/1,000 ft) • Vented, TPU: 14 kg/300 m (32 lbs/1,000 ft) • Vented, Tefzel: 14 kg/300 m (32 lbs/1,000 ft)
Minimum bend radius	2X cable diameter (13.5 mm; 0.54 in)
Break strength	127 kg (280 lbs)
Maximum cable length	1,219 m (4,000 ft) for RS485
Desiccant pack (required for vented systems)	Large and extra large desiccant packs available with titanium, ABS, or stripped-and-tinned termination.
Warranty	2 years

RuggedCable Selection Guide

Application	Jacket Type	Cable Type
Aquifer characterization	TPU or Tefzel	Vented
Crest stage gaging	TPU	Non-vented
Dewatering	TPU	Vented or non-vented
Flood and storm surge monitoring	TPU	Non-vented
Landfill monitoring	Tefzel	Non-vented
Municipal and industrial monitoring (SCADA)	TPU	Non-vented
Remediation projects	Tefzel	Vented
River, lake, and reservoir monitoring	TPU	Vented or non-vented
Saltwater/brackish water	TPU or Tefzel	Vented or non-vented
Stormwater monitoring	TPU	Vented or non-vented
Tide/harbor monitoring	TPU or Tefzel	Vented
Wetland and estuary monitoring	TPU or Tefzel	Vented or non-vented

Specifications are subject to change without notice.

Accessories

- Large desiccant for low-humidity environments or for deployments where maintenance occurs frequently.
- Extra large desiccant for high-humidity environments or for depolyments where maintenance occurs infrequently. Desiccates six times more saturated air than the large desiccant.
- Titanium cable extenders are used to join two lengths of cable without signal loss. The cable extender seals the cables, provides a weight-bearing connection, and maintains venting.
- Plastic and steel reels

Large desiccant with titanium twist-lock connector for standard deployments

Economical large plastic desiccant

Extra large desiccant with titanium twist-lock connector for high-humidity sites, remote sites, or applications that require fast sampling rates.

Outboard desiccant for use with stripped-and-tinned RuggedCable Systems

Titanium cable extender

Kellems is a registered trademark of Hubbell Incorporated.
Teflon and Tefzel are registered trademarks of E.I. Du Pont de Nemours and Co.

In-Situ Inc.

Call to purchase or rent—www.in-situ.com
221 East Lincoln Avenue, Fort Collins, Colorado, U.S.A. 80524
1-800-446-7488 (toll-free in U.S.A. and Canada)
1-970-498-1500 (U.S.A. and international)
Copyright © 2012 In-Situ Inc. All rights reserved. Sept. 2012 (web)

In-Situ Inc.

Information Sheet

Catalog No. 0053310

SHORT STRIPPED & TINNED CABLE with Male Twist-Lock Connector for Level TROLL®

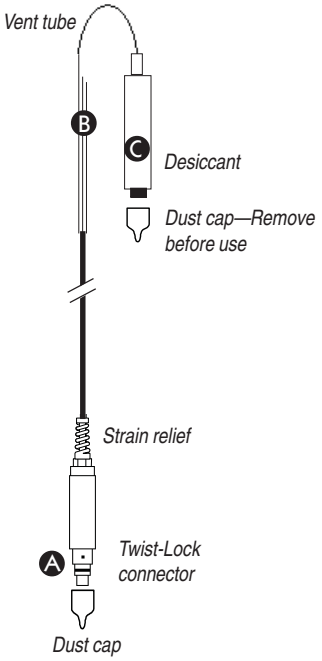

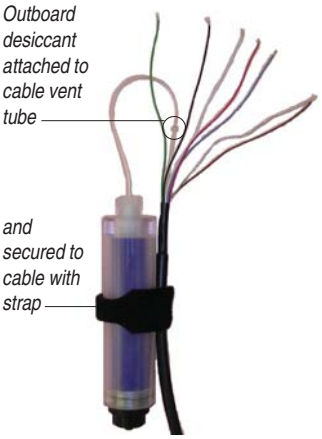

TIP: *The desiccant may be removed from the vent tube, if needed, for better access to the conductor wires. Pull the vent tube extender off the cable vent tube to remove. After connecting and trimming wires, attach desiccant vent tube to cable vent tube and secure desiccant to cable with hook-and-loop strap, as shown here.*

Connects a Level TROLL's RuggedCable™ to a controller or logger for communication via:

- Analog (4-20 mA)
- SDI-12
- RS485 Modbus
- RS232 Modbus (with a customer-supplied converter)

A Male Twist-Lock connector mates with female Twist-Lock connector on the RuggedCable

B Stripped & tinned wires on opposite end for wiring to PLC or logger

C Removable, refillable outboard desiccant protects cable vent tube from condensation in high-humidity environments

SPECIFICATIONS

Materials	PVC, titanium, nylon, Viton®
Dimensions	13.33 cm (5.25 in) long, 19 mm (0.75 in) O.D.
Environmental Rating	IP67 when connected, not designed for submersion
Cable	0.9 m (3 ft) vented TPU (Thermoplastic Polyurethane)
Conductors	6 conductors, 24 AWG, polypropylene insulation
Desiccant pack	Clear acrylic, nylon, HDPE membrane
Desiccant	approx. 22 g silica gel, type 4
Max. recommended cable lengths	SDI-12 61 m (200 ft) Modbus 1259 m (4000 ft) 4-20 mA 1259 m (4000 ft)

CONNECTIONS

Refer to wiring diagrams on back of sheet. Trim back and insulate unused wires. The shield should be wired to a chassis ground or earth ground.

Power Connections. The Red wire provides power for Modbus and SDI-12 modes. The Brown wire provides power for the 4-20 mA mode. If power is present on the Brown wire and not on the Red wire, the device enters the 4-20 mA mode automatically and stays in the 4-20 mode until power is removed from the Brown wire or is applied to the Red wire. The Red wire has priority — if power is applied to both wires at the same time, the device will operate in Modbus or SDI-12 modes but not in 4-20.

Communications. The device automatically switches between Modbus and SDI-12 modes depending on which of the two interfaces has activity. Modbus and SDI-12 cannot be used at the same time — whichever one is currently in use will block communication on the other.

To communicate with the device using Win-Situ® 5 software through a serial COM port: Disconnect the RuggedCable from the short stripped and tinned cable connector. Attach a TROLL Com to the RuggedCable. Connect the TROLL Com's DB9-pin connector to a serial port on a PC running Win-Situ 5.

(over)

SHORT STRIPPED & TINNED CABLE

Level TROLL Connections

ANALOG (4-20 mA) 2 WIRE

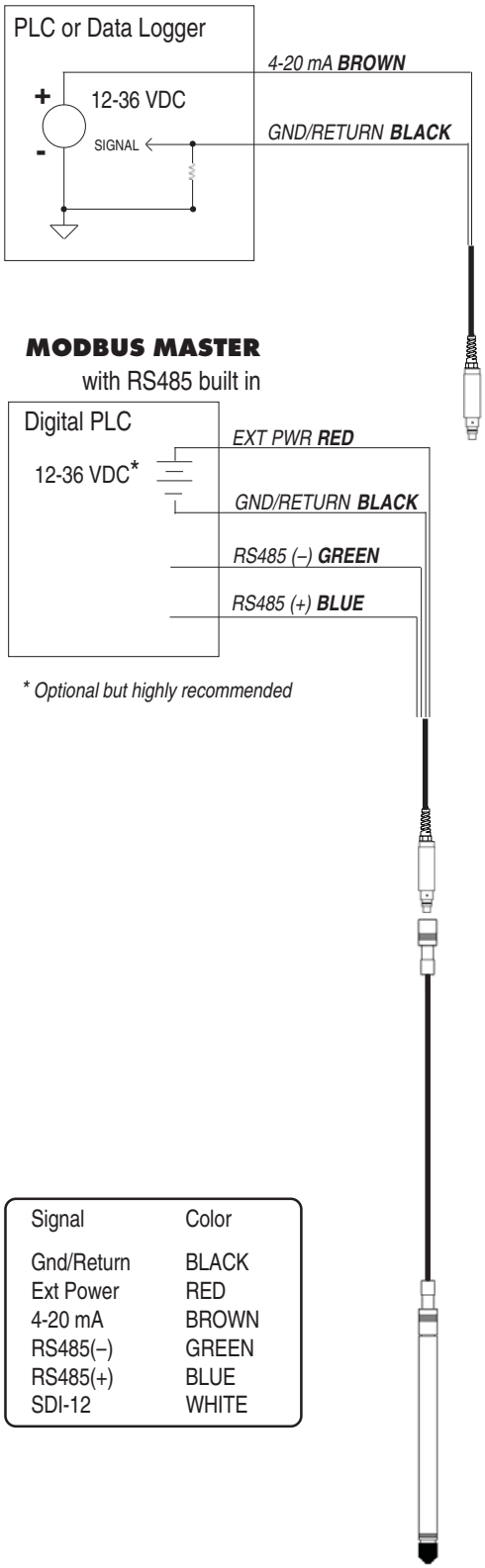

SDI-12 3 WIRE

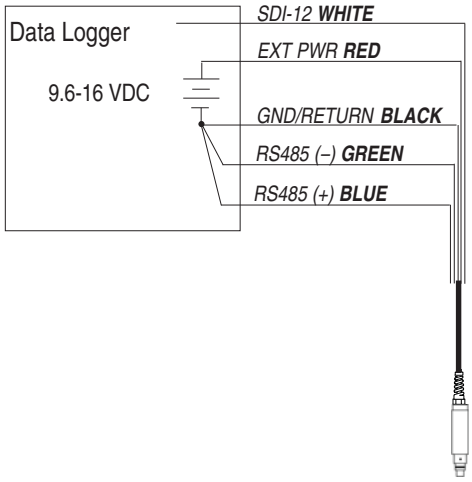

MODBUS MASTER

with RS485 built in

* Optional but highly recommended

MODBUS MASTER

with RS232 built in (converter required)

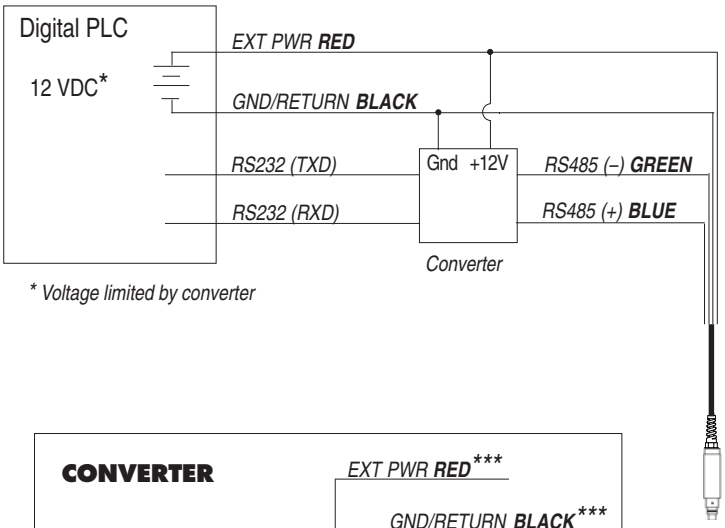

* Voltage limited by converter

CONVERTER

Port-Powered RS485 converter, such as B&B Electronics Model 485SD9TB

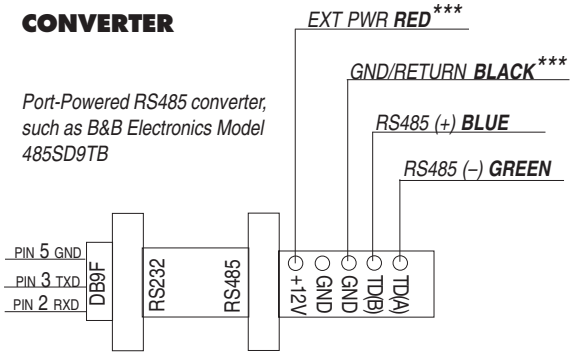

*** Required if port power is not available

Signal	Color
Gnd/Return	BLACK
Ext Power	RED
4-20 mA	BROWN
RS485(–)	GREEN
RS485(+)	BLUE
SDI-12	WHITE

1 800 446 7488
(toll-free, US and Canada) or 970 498 1500 **www.in-situ.com**

In-Situ Inc.

Due to continuing product development this information is subject to change without notice. In-Situ and the In-Situ logo, Win-Situ, TROLL, BaroTROLL, RuggedReader, RuggedCable and RDO are trademarks or registered trademarks of In-Situ Inc. Viton is a registered trademark of DuPont Dow Elastomers.
Copyright © 2005-2007 by In-Situ Inc. All rights reserved.

0053312 rev. 004 09/07

TAG: LSH-7001
LSH-7002
LSH-4002
LSH-5002
LSH-6001

Series 3R/3T General Purpose Probes

- Metallic Rods
- Available in Many Materials for Various Requirements
- Adaptable for Various Fittings

For general purpose use, Series 3R probes are metallic rods with threaded ends that screw into a fitting that extends vertically down into the liquid. Available in a variety of materials for different applications. 3T tapered rods are also available.

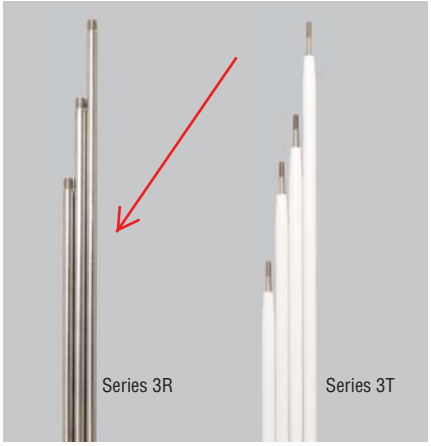

Specifications

Style	
Series 3R	1/4˝ (.64 cm) threaded rod
Series 3T	1/4˝ (.64 cm) tapered rod
Material	Brass, Hastelloy C, Monel, 316 stainless steel, titanium, Carp. 20
Sheathing (optional)	PVC heat shrink 200°F (93°C), Teflon® heat shrink 350°F (177°C)

Applications

3R: For use with Series 3E, 3F, 3G, 3B fittings

3T: For use with Series 3G and other custom configurations

How to Order

Use the **Bold** characters from the chart below to construct a product code.

3R 2 C 4

Series
3R **3T**

Length (Feet)
1 – One
2 – Two
3 – Three
4 – Four
5 – Five
6 – Six
7 – Seven
8 – Eight
9 – Nine
10 – Ten

Probe Material
A – Brass
C – 316 Stainless Steel
D – Carp. 20
E – Hastelloy B
F – Hastelloy C
G – Monel
H – Titanium

Sheathing Heat Shrink
0 – None
4 – PVC
5 – Teflon®

Contact your representative for custom lengths.

Note: Long lengths can be coupled to facilitate shipping and installation. Consult factory.

Dimensions

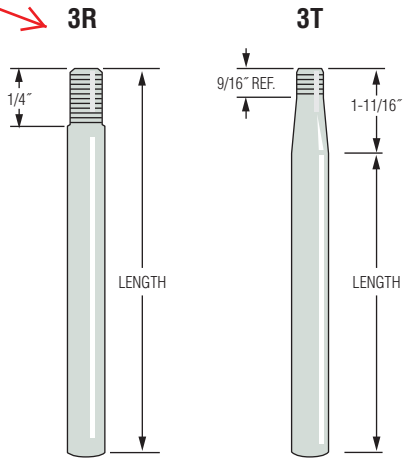

WARRICK CONDUCTIVITY SENSORS

TAG: LSH-4001
LSH-5001

Series 3W – Wire Suspended Probes

- Metallic Bars
- Plastic Shield Protected
- Adaptable to Many Fittings
- Field Assembled

Series 3W probes, consisting of metallic bars within a protective plastic shield, are designed to be suspended in liquid with PVC-insulated wires. They are ideal for applications where rigid electrode rods are impractical or cumbersome, such as:

- Deep Wells
- Pump Control
- Waste Water
- Deep Tanks

7/8˝ (2.22 cm) diameter x 3-3/4˝ (9.52 cm) length. 3Z1A wire and 3Z1B adaptor kit required for use with 3E, 3F and 3N fittings.

X 4

Series 3W

Components Detail

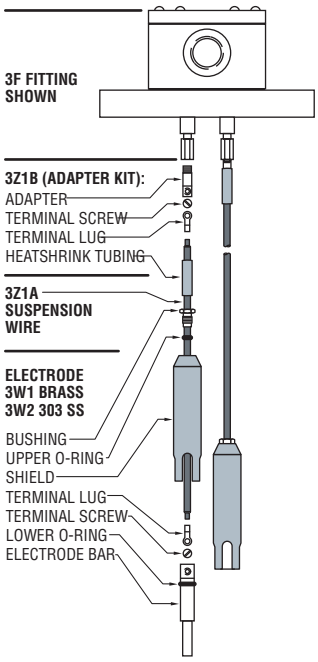

How to Order

Select a 3W electrode, a 3Z1B adaptor and a length of 3Z1A suspension wire to form a complete suspended probe.

1. 3W Electrodes

Probe Material	Part Number
Brass	3W1
316 Stainless Steel	3W2

2. 3Z1B Adaptor Kit

For use with 3E, 3F and 3N fittings.

Part Number: 3Z1B

3. 3Z1A Suspension Wire

Order in standard or custom length.

Length (Feet)	Part Number
500	100325-500
1000	100325-1000
5000	100325-5000
Custom	3Z1A-20

Specify in one foot increments up to 5000 ft.

Series 3Y – Corrosion Resistant Probes

- Metallic Bars
- Corrosion Resistant
- Available in Many Materials for Various Requirements
- Adaptable for Various Fittings

Series 3Y wire suspended probes consist of metallic bars within a protective plastic shield, designed to be suspended in liquid. Series 3Y suspension wires are PVC or Teflon® insulated for use in corrosive liquid applications. 7/8˝ (2.22 cm) diameter x 3-1/2˝ (8.90 cm) length.

Series 3Y

Specifications

Style	Wire suspended
Tip Material	Carp. 20, Hastelloy C, 316 stainless steel
Shield Material	PVC 150°F (66°C), Teflon®

How to Order

Use the **Bold** characters from the chart below to construct a product code.

3Y X X X

Series
3Y

Shield Material
1 – PVC
3 – Teflon®

Probe Tip Material
C – 316 Stainless Steel
D – Carp. 20
F – Hastelloy C

Length of Wire
1 – 10 feet
2 – 20 feet
3 – 30 feet
etc.

Note: 3Z1B Connector is used to connect suspension wire with 3B, 3E, 3F, 3G or 3N fitting.

Applications

- General Purpose
- Wire Suspended Probes
- Corrosive Liquids, Chemicals

BOM #19
TAGS: LSHY-4001
LSHY-4002
LSHY-5001
LSHY-5002
LSHY-6001
LSHY-7001
LSHY-7002

Warrick

Series 16DM

Series 16DM DPDT Load Contact, Solid State Plug-In Module

Part No. 16DMB1B0
Unit Price $267
Lead Time (Days) 5

Image is of actual product

Model	16DM
Mode of Operation	Direct
Sensitivity	10 K
Control Style	Plug-In Module
Socket Style	DIN Mount
Standoff Style	N/A
Enclosure	None
Contact Design	2 Normally Open & 2 Normally Closed (non-powered)
Contact Rating	5 Amp Resistive 1/10 horse power
Secondary Voltage	12 VAC
Terminal Style	Screw Connector
Number of Channels	1
Minimum Temperature (°F)	-40
Maximum Temperature (°F)	150
Protection	Non-Intrinsically Safe
Approvals	UL 508 General Purpose
Minimum Qty (per Release)	1
Weight (Lbs)	1.1

Options

Warrick® Series 16DM Controls

Installation and Operation Bulletin

This bulletin should be used by experienced personnel as a guide to the installation of series 16DM controls. Selection or installation of equipment should always be accompanied by competent technical assistance. We encourage you to contact Gems Sensors Inc. or its representative if further information is required.

	Specifications
Control Design:	Solid-State components enclosed in clear Lexan plug-in style housing. Housing carries no NEMA rating
Contact Design:	2 SPDT (2 form C): Two Normally Open (N.O.) and two Normally Closed (N.C.), non-powered contacts
Contact Ratings:	5 A @ 120, 240 VAC resistive, 1/8 H.P. @ 120 or 240 VAC
Contact Life:	Mechanical: 5 million operations - Electrical: 100,000 operations minimum at rated load
Supply Voltage	24, 120, or 240 VAC Models - Factory Set. Plus 10%, minus 15%, 50/60 Hz
Supply Current:	120, 240, 24 VAC, Relay energized 4.4 VA
Secondary	12 VAC RMS Voltage on probes. 1.5 milli-amp Current
Circuit:	Models operate from 0 to 1,000,000 OHM maximum
Sensitivity:	specific resistance - Factory set
	-40° To 150°F Ambient
Temperature:	All connections #6-32 screw type with pressure clamps
Terminals:	Standard, 0.5 seconds on rising level.
Time Delays:	Additional time delays on rising and/or falling level available as option.
Listings:	U.L. Listing, Industrial Motor Control (508). 240 and 208 volt units are not U.L. limit control recognized.

Installation

1. Install octal socket in appropriate enclosure using two #6 or #8 metal screws.
   a) Install rail mount socket on appropriate rail (DIN mount) in appropriate enclosure, if applicable.
2. Wire control per wiring diagram, following N.E.C. and local codes.
3. Install control module in socket.

Sensitivities vs Maximum Probe Wire Distance*

Sensitivity Character	Sensitivity (K Ohms)	Distance (Ft.)
A or K	4.7	10,000
B or L	10	5,700
C or M	26	2,200
D or N	50	1,075
E or P	100	570
F or R	470	270
G or S	1,000	38

* Based on type MTW or THHN wire, #14 or #16 Awg

Dimensions

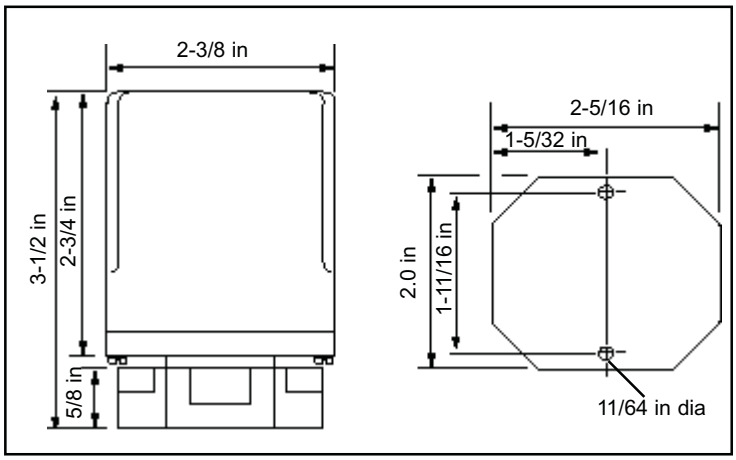

Use copper (60/70° C) wire only. Torque to 20 inch pounds.

Wiring Diagram

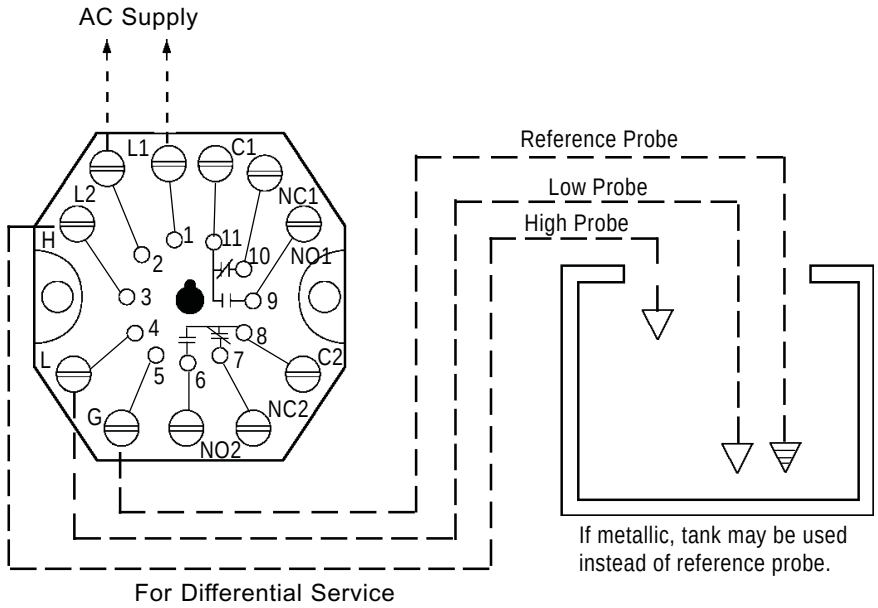

Note: For Single Level Service, use "H" and "G" Connections

Operation

Direct Mode - Single Level Service:
When the liquid rises to the electrode on terminal 3, the control energizes, changing state of the load contacts. **(LED will be lit)** The control remains energized until the liquid level recedes below electrode on terminal 3. The control then de-energizes, **(LED will not be lit)** returning load to original state.

Inverse Mode - Single Level Service:
Control energizes with power, changing state of the load contacts. **(LED will be lit)** When the liquid rises to the electrode on terminal 3, the control de-energizes, returning the load contacts to shelf state. **(LED will not be lit)** The control remains de-energized until liquid level recedes below the electrode connected to terminal 3. The control then energizes.

Direct Mode - Differential Service:
When the liquid rises to the electrode on terminal 3, the control energizes, changing state of the load contacts. **(LED will be lit)** The control remains energized until the liquid level recedes below electrode on terminal 4. The control then de-energizes, **(LED will not be lit)** returning the load contacts to original state.

Inverse Mode - Differential Service:
Control energizes with power, **(LED will be lit)** changing state of the load contacts. When the liquid rises to the electrode on terminal 3, the control de-energizes, returning load contacts to shelf state. **(LED will not be lit)** The control remains de-energized until the liquid level recedes below the electrode on terminal 4. The control then energizes.

Optional

Time Delays: With time delay on increasing level, the liquid must be in contact with the short electrode for the full duration of the time delay before control will operate. With delay on decreasing level, the liquid must be below long electrode for the full duration of the time delay before control will operate. In single level service, terminals 3 and 4 must be jumpered together to achieve time delays on both increasing and decreasing levels or just decreasing level.

16DM B 1 B **-XX-XX**

- ~~**Time Delay:** (decreasing level) 1-20 sec.~~
- ~~**Time Delay:** (increasing level) 1-20 sec.~~
- ~~**Enclosure:** 0-none, 1-NEMA 1, 4-NEMA 4, 7-NEMA 7, 12-NEMA 12~~
- **Socket Style:** A - 11 Pin Octal, B - 11 Pin DIN Mount, M - None, Module Only
- **Supply Voltage:** 1- 120 VAC, 2- 240 VAC, 3- 24 VAC, 8- 208/240 VAC*
- **Mode/Sensitivity:**
  - **Direct** A- 4.7K, B- 10K, C- 26K, D- 50K, E- 100K, F- 470K, G- 1M
  - **Inverse** K- 4.7K, L- 10K, M- 26K, N- 50K, P- 100K, R- 470K, S- 1M

*187 Vmin to 255 Vmax VAC

Gems Sensors Inc.
One Cowles Road
Plainville, CT 06062-1198
Tel: 860-793-4579
Fax: 860-793-4580

BOM #21

Product: 700-HK32A1

Description: 700-HK General Purpose Slim Line Relay

Representative Photo Only
(actual product may vary based on configuration selections)

CONTROL RELAY DATA

Contact Rating	8 Amp Contact (Slim Line Relay)
Contact Configuration	DPDT Contact Arrangement
Coil Voltage	120V 50/60Hz
Relay Option	No Additional Options

CERTIFICATIONS AND APPROVALS

CE	Marked
UL	Listed with socket, Guide No. NLDX, File No. E3125
UR	Recognized, Guide No. NLDX2, File No. E3125
CSA	
For UL Certifications Directory:	http://database.ul.com/cgi-bin/XYV/template/LISEXT/1FRAME/index.htm

ac
10/4/15

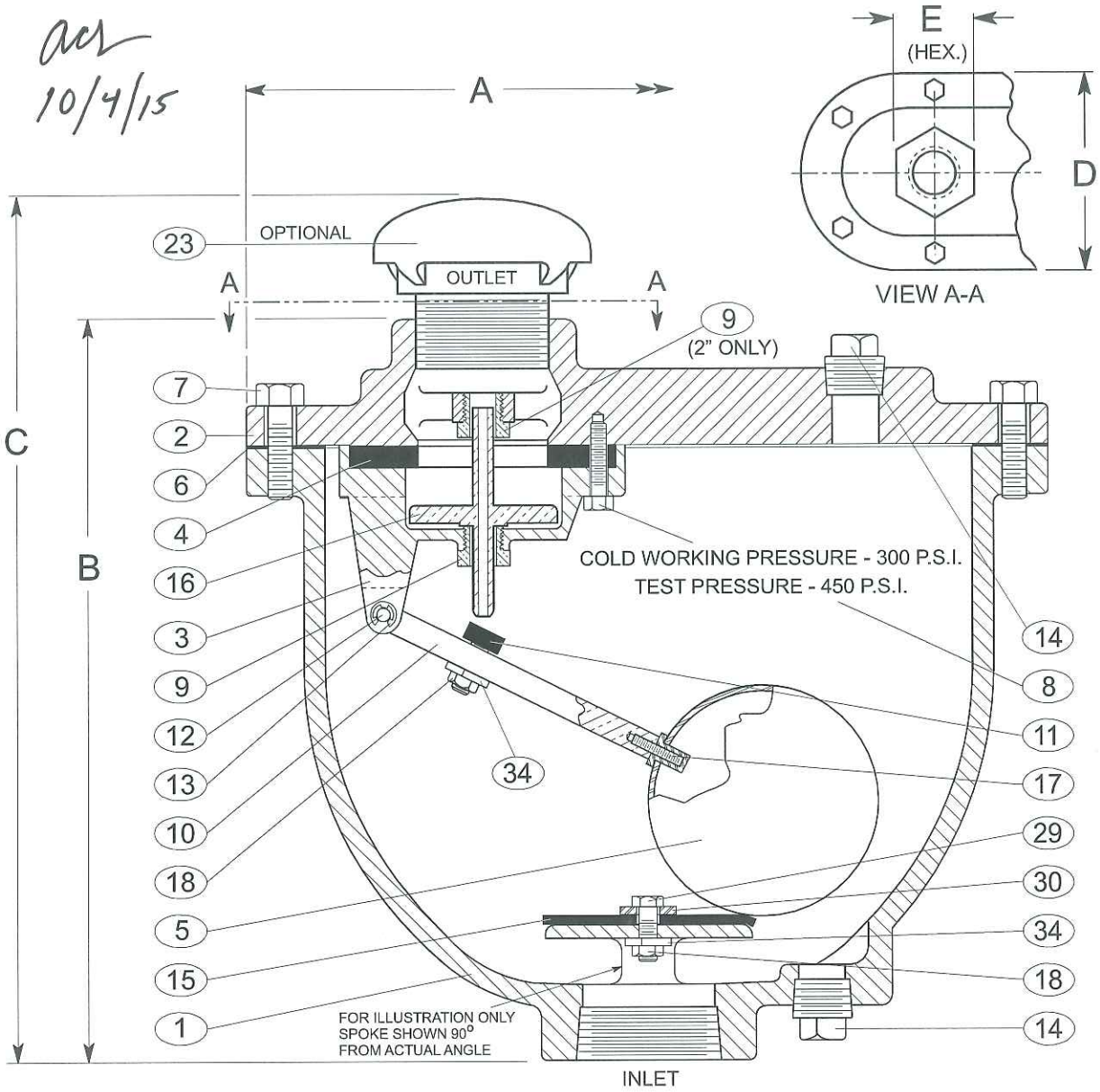

1	BODY	5	FLOAT	9	BUSHING	13	RETAINING RING	18	LOCK NUT
2	COVER	6	GASKET	10	FLOAT ARM	14	PIPE PLUG	23	SCREENED HOOD
3	BAFFLE	7	COVER BOLTS	11	ORIFICE BUTTON	15	CUSHION	29	CUSHION RETAINER
4	SEAT	8	RETAINING SCREWS	12	PIVOT PIN	16	PLUG	30	WASHER
						17	FLOAT RETAINER	34	LOCK WASHER

SEE DRAWING NO. VM-201C-M FOR STANDARD MATERIALS OF CONSTRUCTION.

VALVE SIZE	MODEL NO.*	A	B	C	D	E	INLET SIZE	OUTLET SIZE	ORIFICE SIZE
1"	201C.2	11 3/8"	10 1/2"	12 5/8"	6 3/8"	2"	1" N.P.T.	1" N.P.T.	5/64"
2"	202C.2	14"	13"	15 7/8"	8 1/4"	3 1/4"	2" N.P.T.	2" N.P.T.	3/32"

*Add "H" to Model No. for optional screened hood SPK-1H.

Revised 1-9-06

COMBINATION AIR VALVE (SINGLE BODY TYPE)	DATE 2-2-69
VAL-MATIC® VALVE AND MANUFACTURING CORP.	DRWG. NO. VM-201C

COMBINATION AIR VALVES (SINGLE BODY TYPE)

MODEL NOS. 201C.2 - 202C.2 - 203C.2 - 204C.2

STANDARD MATERIALS OF CONSTRUCTION

PART NO.	PART NAME	MATERIAL
1	BODY	CAST IRON ASTM A126, CLASS B
2	COVER	CAST IRON ASTM A126, CLASS B
3	BAFFLE	CAST IRON ASTM A126, CLASS B
4	SEAT	BUNA-N
5	FLOAT	STAINLESS STEEL T316, ASTM A240
6	GASKET	COMPRESSED NON-ASBESTOS FIBER
7	COVER BOLT	ALLOY STEEL SAE, GRADE 5
8	RETAINING SCREWS	STAINLESS STEEL T316, ASTM F593
9	GUIDE BUSHING	STAINLESS STEEL T316, ASTM A240
10	FLOAT ARM	STAINLESS STEEL T316, ASTM A240
11	ORIFICE BUTTON	STAINLESS STEEL & BUNA-N
12	PIVOT PIN	STAINLESS STEEL T316, ASTM A276
13	RETAINING RING	STAINLESS STEEL PH 15-7 MO
14	PIPE PLUG	STEEL
15	CUSHION	BUNA-N
16	PLUG	STAINLESS STEEL T316, ASTM A276
17	FLOAT RETAINER	STAINLESS STEEL T316, ASTM F880
18	LOCK NUT	STAINLESS STEEL T316, ASTM F594
29	CUSHION RETAINER	STAINLESS STEEL T316, ASTM F593
30	WASHER	STAINLESS STEEL T316, ASTM A240
34	LOCK WASHER	STAINLESS STEEL T316, ASTM A240

NOTE: ALL SPECIFICATIONS AS LAST REVISED.

Revised 1-29-03

MATERIALS OF CONSTRUCTION	DATE 2/2/69
VAL-MATIC® VALVE AND MANUFACTURING CORP.	DRWG. NO. VM-201C-M

CLASSIFIED C UL US

WATER QUALITY
NSF / ANSI 61
2LA8

Per 10/4/12

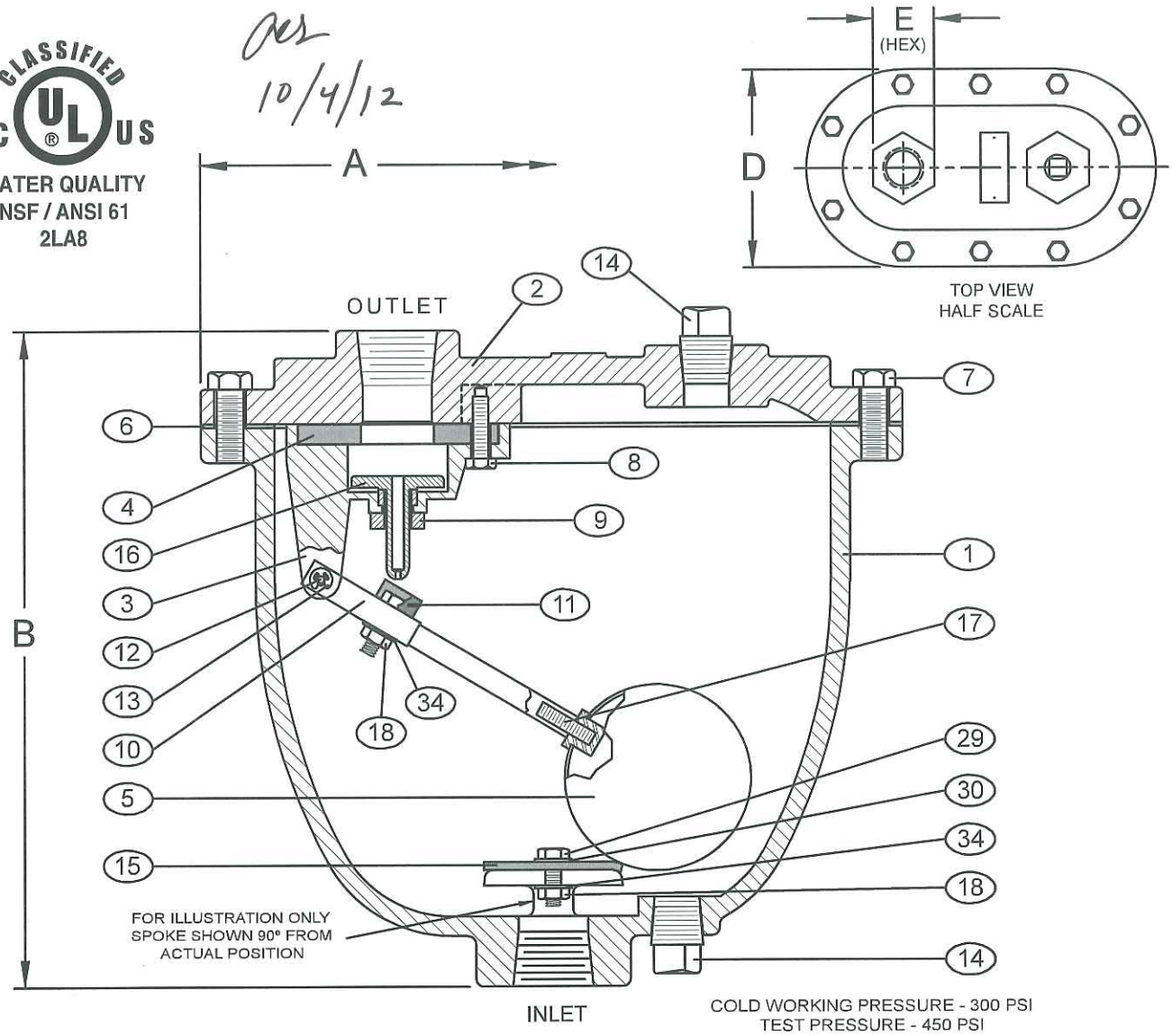

COLD WORKING PRESSURE - 300 PSI
TEST PRESSURE - 450 PSI

SEE DRAWING NO. VM-201C-M FOR STANDARD MATERIALS OF CONSTRUCTION.
SEE DRAWING NO. VM-201CDISV-M FOR SUPER VALVE MATERIALS OF CONSTRUCTION.

VALVE SIZE	MODEL NUMBER	A	B	D	E	INLET SIZE	OUTLET SIZE	ORIFICE SIZE
1"	201C.2	11.38	10.50	6.38	2.00	1" NPT	1" NPT	5/64"

1	BODY	8	RETAINING SCREWS	15	CUSHION
2	COVER	9	BUSHING	16	PLUG
3	BAFFLE	10	FLOAT ARM	17	FLOAT RETAINER
4	SEAT	11	ORIFICE BUTTON	18	LOCK NUT
5	FLOAT	12	PIVOT PIN	29	CUSHION RETAINER
6	GASKET	13	RETAINING RING	30	WASHER
7	COVER BOLTS	14	PIPE PLUG	34	LOCK WASHER

Revised 8-19-14 (Rev 1)

COMBINATION AIR VALVE (SINGLE BODY TYPE)	DATE 5-8-13
VAL-MATIC VALVE AND MANUFACTURING CORP.	DRWG. NO. VMC-201C

COMBINATION AIR VALVES (SINGLE BODY TYPE)

MODEL NOS. 201C.2SV - 202C.2SV - 203C.2SV - 204C.2SV

STANDARD MATERIALS OF CONSTRUCTION

PART NO.	PART NAME	MATERIAL
1	BODY	CAST IRON ASTM A126, CLASS B (INTERIOR / EXTERIOR FUSION BONDED EPOXY)
2	COVER	CAST IRON ASTM A126, CLASS B (INTERIOR / EXTERIOR FUSION BONDED EPOXY)
3	BAFFLE	CAST IRON ASTM A126, CLASS B (INTERIOR / EXTERIOR FUSION BONDED EPOXY)
4	SEAT	EPDM
5	FLOAT	STAINLESS STEEL T316, ASTM A240
6	GASKET	COMPRESSED NON-ASBESTOS FIBER
7	COVER BOLT	STAINLESS STEEL T316, ASTM F593
8	RETAINING SCREWS	STAINLESS STEEL T316, ASTM F593
9	GUIDE BUSHING	STAINLESS STEEL T316, ASTM A240
10	FLOAT ARM	STAINLESS STEEL T316, ASTM A240
11	ORIFICE BUTTON	STAINLESS STEEL & EPDM
12	PIVOT PIN	STAINLESS STEEL T316, ASTM A276
13	RETAINING RING	STAINLESS STEEL PH 15-7 MO
14	PIPE PLUG	STAINLESS STEEL
15	CUSHION	BUNA-N
16	PLUG	STAINLESS STEEL T316, ASTM A276
17	FLOAT RETAINER	STAINLESS STEEL T316, ASTM F880
18	LOCK NUT	STAINLESS STEEL T316, ASTM F594
29	CUSHION RETAINER	STAINLESS STEEL T316, ASTM F593
30	WASHER	STAINLESS STEEL T316, ASTM A240
34	LOCK WASHER	STAINLESS STEEL T316, ASTM A240

NOTE: ALL SPECIFICATIONS AS LAST REVISED.

MATERIALS OF CONSTRUCTION	DATE 8/10/09
VAL-MATIC® VALVE AND MANUFACTURING CORP.	DRWG. NO. VM-201C.2SV-M

WATER QUALITY
NSF / ANSI 61
2LA8

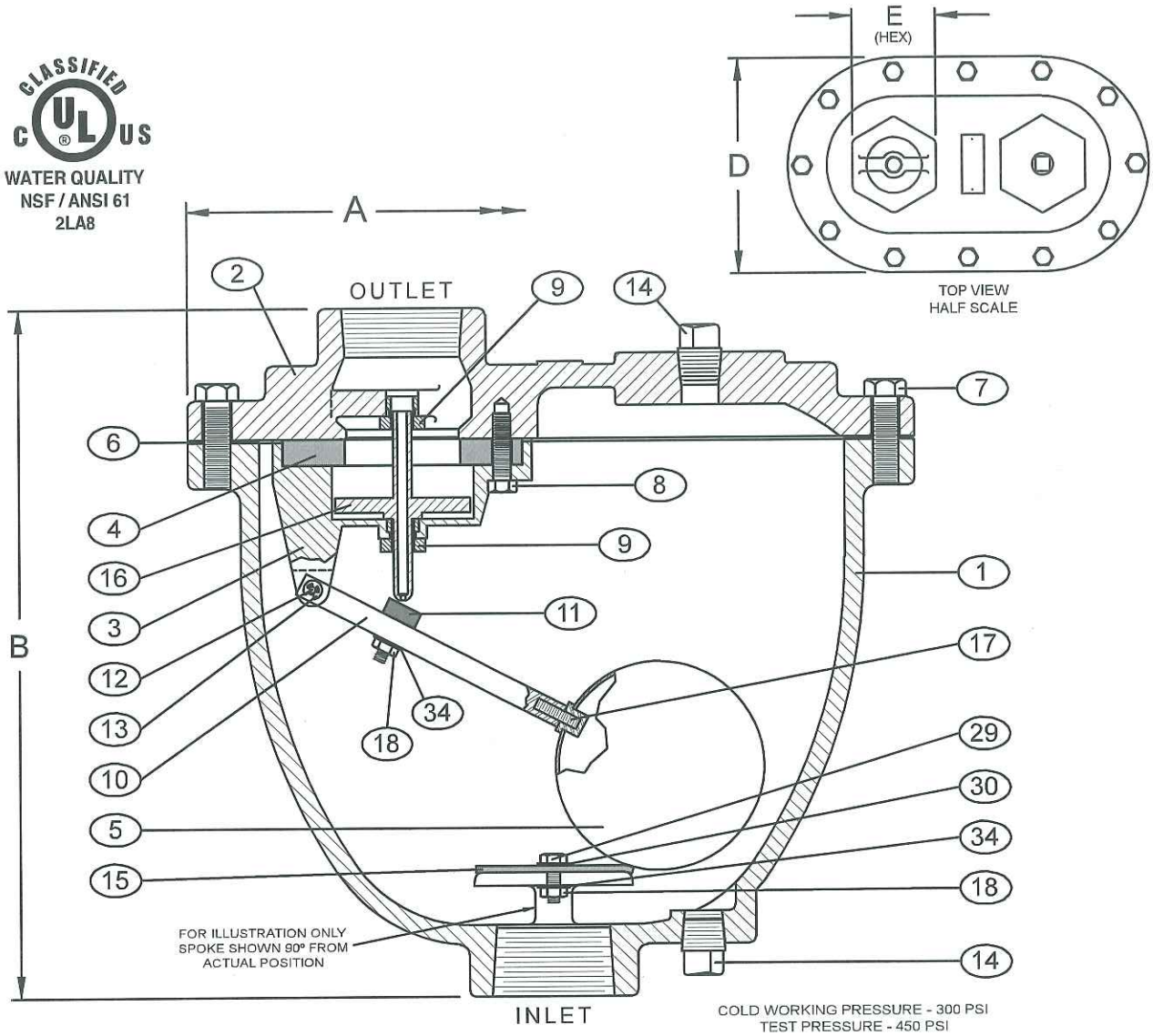

SEE DRAWING NO. VM-201C-M FOR STANDARD MATERIALS OF CONSTRUCTION
SEE DRAWING NO. VM-201CDISV-M FOR SUPER VALVE MATERIALS OF CONSTRUCTION

VALVE SIZE	MODEL NUMBER	A	B	D	E	INLET SIZE	OUTLET SIZE	ORIFICE SIZE
2"	202C.2	14.00	13.00	8.25	3.25	2" NPT	2" NPT	3/32"

1	BODY	8	RETAINING SCREWS	15	CUSHION
2	COVER	9	BUSHING	16	PLUG
3	BAFFLE	10	FLOAT ARM	17	FLOAT RETAINER
4	SEAT	11	ORIFICE BUTTON	18	LOCK NUT
5	FLOAT	12	PIVOT PIN	29	CUSHION RETAINER
6	GASKET	13	RETAINING RING	30	WASHER
7	COVER BOLTS	14	PIPE PLUG	34	LOCK WASHER

Revised 8-19-14 (Rev 1)

COMBINATION AIR VALVE (SINGLE BODY TYPE)

DATE 5-8-13

VAL-MATIC VALVE AND MANUFACTURING CORP.

DRWG. NO. VMC-202C

Flow Transmitters Tags
FIT-7001
FIT-7002

McCROMETER

Advanced
Differential
Pressure
flow meter
Technology

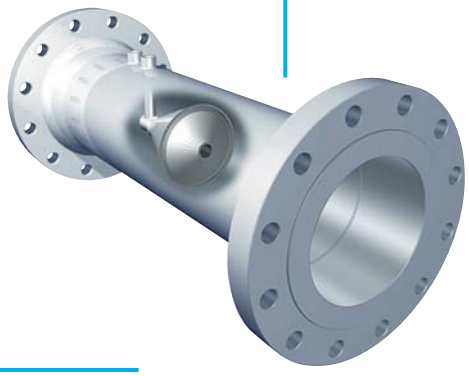

For The Real World.

VCONE

The V-Cone® flow meter - A Superior DP Technology

Proven Performa

Centrally-located cone directs flow to the outside wall effectively conditioning disrupted flows.

High Performance in "Real World" Applications

McCrometer's V-Cone® flow meter is an innovative system that takes differential pressure flow measurement to another level. Designed for mild to harsh operating environments, and for a wide variety of fluids, this advanced flow meter consistently outperforms traditional DP devices and other flow technologies. The V-Cone flow meter offers better accuracy and repeatability, wider rangeability, installation flexibility and reduced maintenance.

Accuracy You Can Count On

The key benefit to the V-Cone flow meter's unique design is its ability to provide repeatable accuracy of up to ±0.5% of rate under even the most difficult flow conditions. The V-Cone flow meter has been proven to be accurate over a wide range, from very low to extremely high Reynolds numbers. Whether measuring swirling fluids or low pressure flows, the V-Cone flow meter delivers the accuracy and reliability other devices only achieve under laboratory conditions. The V-Cone flow meter also has low headloss when compared to other dP technologies.

Acts As Own Flow Conditioner

The V-Cone flow meter's enhanced performance is due to the shape and position of the cone in relation to the measurement ports. This allows the V-Cone flow meter to act as its own flow conditioner by disrupting all centralized flow disturbances. This fully mixed and conditioned flow results in a low amplitude, high frequency signal with little "signal noise." Readings are always precise and reliable, including low pressure flow situations.

VCONE

The V-Cone Flow meter typically requires
only 0-2 pipe diameters
even in disturbed flow applications.

Maximum Installation Flexibility

The V-Cone flow meter's ability to condition the flow prior to measurement results in another significant benefit: installation flexibility. Because the V-Cone flow meter can accurately measure disturbed flow, it doesn't require the upstream or downstream straight pipe runs of many other flow meters. This key feature means the V-Cone flow meter can be installed virtually anywhere in a piping system or easily retrofit into an existing piping layout.

The result can be significant cost savings. It also means the V-Cone flow meter can fit where other flow meters can't due to limited space or weight requirements.

Flexible Design Meets Range of Needs

The V-Cone flow meter offers exceptional sizing flexibility. It can be sized for line diameters of 1/2" to over 120". An extensive variety of construction materials are also available.

Low-to-No Operating Costs

The V-Cone flow meter assures long-term performance. It has no moving parts to replace and maintain. In addition, the contoured shape of the cone directs the flow without impacting it against an abrupt surface. Instead, a boundary layer forms along the cone, directing fluid away from the beta edge. Because the beta remains unchanged, the calibration of the meter is accurate for a much longer time, possibly indefinitely.

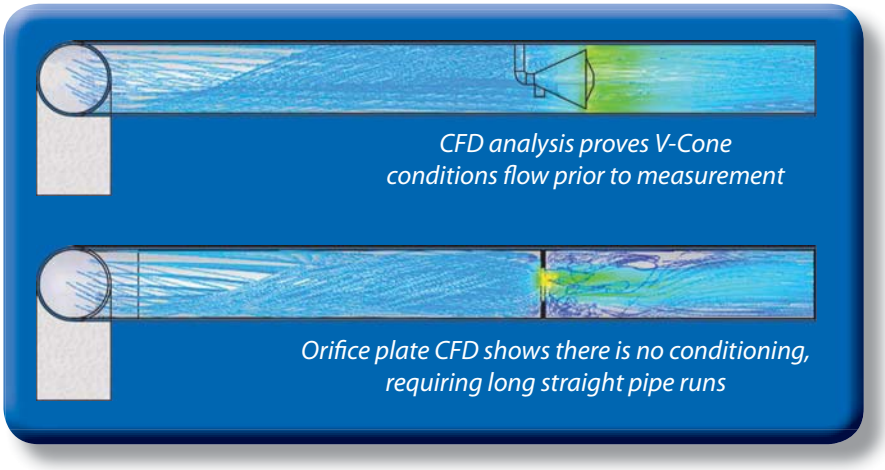

The contoured shape and location of the suspended cone in the V-Cone flow meter reshapes the velocity profile upstream. As the flow approaches the cone, the flow profile "flattens" toward the shape of a well-developed profile - even in extreme flow conditions.

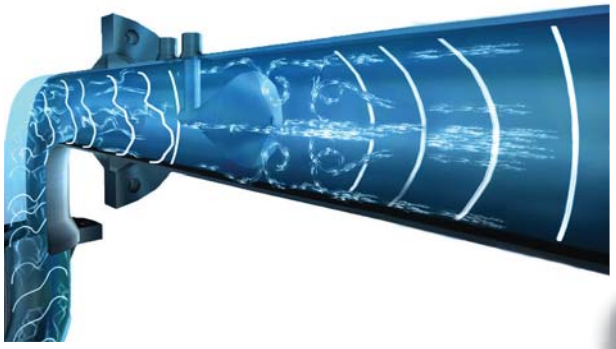

V-Cone flow meter Performance Advantages

high accuracy

•

high repeatability

•

self conditioning

•

minimum straight pipe requirements

•

broad rangeability

•

low headloss

•

clean or dirty liquids, wet gases, slurries

•

low signal noise

•

virtually no maintenance

McCrometer Application Support

At McCrometer, we have been innovating flow meters for over 55 years. Our knowledgeable staff can accurately evaluate your flow application and specify the best meter for your job.

For an evaluation of your flow application or to find out about our other flow meter products, contact your McCrometer representative today.

McCROMETER

In Real World Measurement Applications

Ideal For Tough Applications

- oil & gas production and delivery
- petroleum refining
- municipal water & wastewater
- chemical/ pharmaceutical processing
- power/co-generation
- mining
- pulp & paper
- industrial manufacturing
- food & beverage

Advanced DP Technology: Principles of Operation

The McCrometer V-Cone flow meter technology accurately measures flow over a wide range of Reynolds numbers, under all kinds of conditions and for a variety of fluids. It operates on the same physical principle as other differential pressure-type flow meters, using the theory of conservation of energy in fluid flow through a pipe. The V-Cone flow meter's remarkable performance characteristics, however, are the result of its unique design. It features a centrally-located cone inside the tube. The cone interacts with the fluid flow, reshaping the fluid's flow profile and creating a region of lower pressure immediately downstream of itself. The pressure difference, exhibited between the static line pressure and the low pressure created downstream of the cone, can be measured via two pressure sensing taps. One tap is placed slightly upstream of the cone, the other is located in the downstream face of the cone itself. The pressure difference is then incorporated into a derivation of the Bernoulli equation to determine the fluid flow rate.

The cone's central position in the line optimizes the velocity of the flow at the point of measurement, assuring highly accurate, reliable flow measurement regardless of the flow condition upstream of the meter.

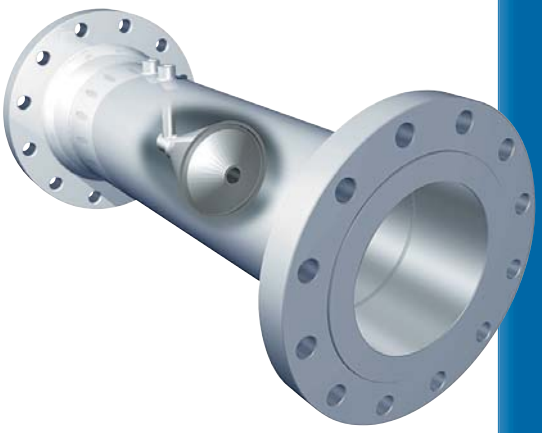

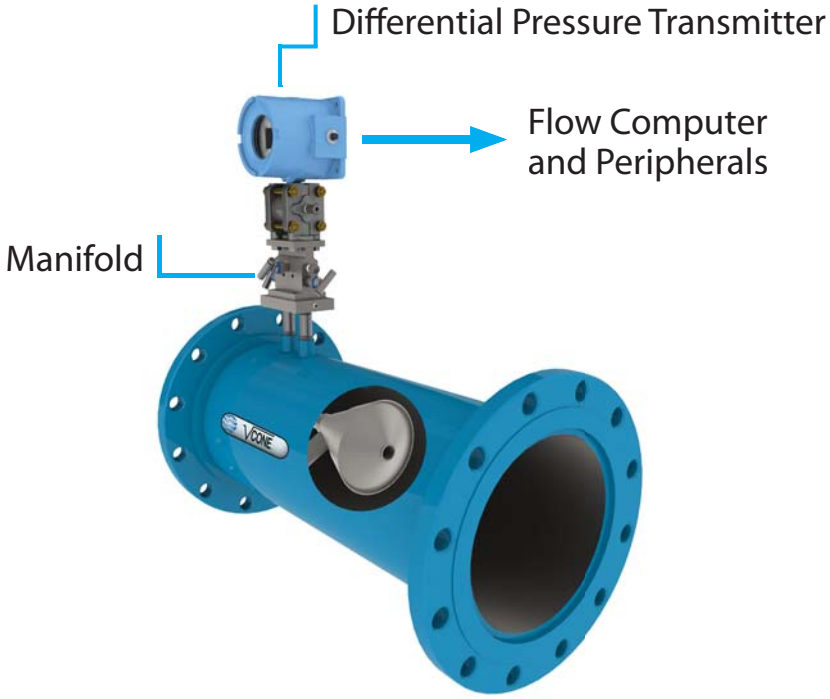

Standard Accuracy:	From ± 0.5% of actual flow (certain fluids and Reynolds number applications require special calibrations to achieve this value).
Repeatability:	±0.1% or better.
Flow Ranges:	10:1 and greater.
Standard Beta Ratios:	0.45 through 0.80, special betas available.
Head Loss:	Varies with beta ratio and DP.
Installation Piping Requirements:	Typically 0-3 diameters upstream and 0-1 diameters downstream of the cone are required, depending on fittings or valves in the adjacent pipeline.
Materials of Construction Include:	Duplex, 304, or 316 stainless steel, Hastelloy C-276, 6MO, carbon steels. Other materials on request.
Line Sizes:	0.5" to 120" or larger.
End Fittings:	Flanged, threaded, hub or weld-end standard. Others on request.
Configurations:	Precision flow tube and wafer-type. • Calibrated for customer application. • ASME B31.3 construction standard.
Approvals for the V-Cone Flow Meter:	• Canadian custody transfer approved. • Meters in compliance with PED97/23/EC are available upon request. • ISO 9001:2008 certified quality management system.
Performance Verification Testing	• Tested at an API Registered MPMS Test Facility according to the requirements of API MPMS Chapter 22.2.

McCROMETER

www.mccrometer.com
3255 West Stetson Avenue, Hemet, California 92545 USA
Phone 800-220-2279 | 951-652-6811 | Fax 951-652-3078

© 2009-2012 by McCrometer, Inc. / Printed in USA Lit Number 24509-49 Rev. 2.3 / 08-13
May be covered by one or more patents, including U.S. Patents 5,363,699 and 5,814,738 and counterparts outside the U.S.; other U.S. and foreign patents pending. V-Cone® and Wafer-Cone® are registered trademarks of McCrometer, Inc.

Wafer-Cone®

CONFIGURATION SHEET

MODEL VH

Designed for Flanged Pipelines

Patent 5,814,738

DESCRIPTION AND GENERAL PERFORMANCE SPECIFICATIONS

The Wafer-Cone flowmeter is a differential pressure type flow measurement device. A cone is positioned in the center of the pipe to increase the velocity of the flowing fluid and create a differential pressure. This pressure difference can be measured and used to accurately interpret flowrate. Wafer-Cone flowmeters can be ordered with either a flanged transmitter direct mount or threaded taps for remote mounting.

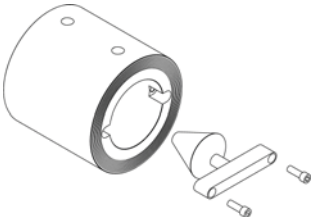

Typical performance specifications:

- Accuracy: ±1.0% of rate *
- Turndown: 10:1
- Repeatability: ±0.1%
- Standard Betas: 0.45 through 0.85
- Headloss: % of Dp, varies with beta ratio
- Installation: 1-3 diameters upstream and 1 diameter downstream

Unique Features:

- No Welding (on remote mount option)
- Interchangeable Wafer-Cone Elements

Options:

- Gas or Oil Flow Calibration

* Each Wafer-Cone is sized for the intended application. Specific performance ratings must be obtained through the sizing process.

MODEL VH

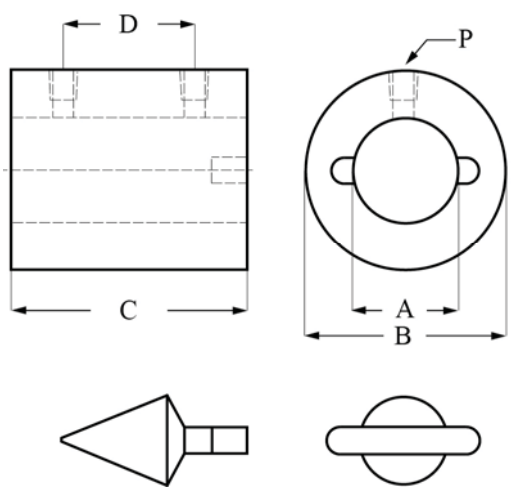

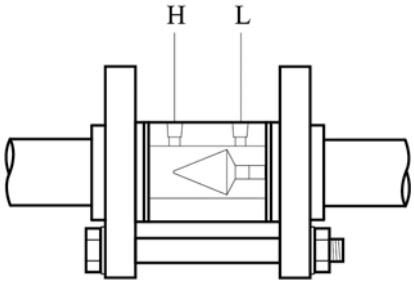

Remote Mount Wafer-Cone

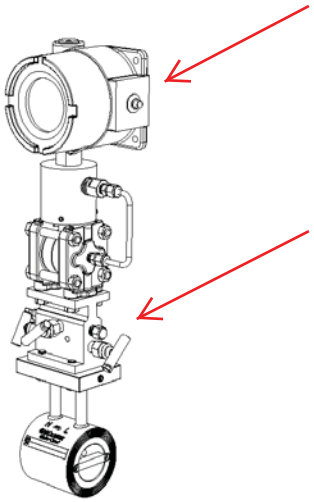

Direct Mount Wafer-Cone

DIMENSION TABLE

	Remote And Direct Mount (Inches)					Remote And Direct Mount (Milimeters)					Pressure Ports	
Model	Size inch	A inch	C inch	D inch	B inch	Size mm	A mm	C mm	D mm	B mm	P NPT inch	P RC inch
VH01	1”	0.957	2.25	1.25	2.00	25	24,31	60	31.8	50.8	1/8	1/8
VH0C	1½”	1.500	3	1.7	2.88	40	38,10	80	43.2	73.5	1/8	1/4
VH02	2”	1.939	3.38	1.88	3.62	50	49,25	85	47.6	91.9	1/4	1/4
VH0D	2½”	2.323	4	2.5	4.12	65	59,00	100	63.5	104.6	1/4	1/4
VH03	3”	2.900	4.75	2.75	5.00	80	73,66	120	69.9	127.0	1/4	1/4
VH04	4”	3.826	6	3.5	6.19	100	97,18	150	88.9	157.2	1/4	1/4
VH06	6”	5.761	9.5	6.0	8.50	150	146,33	240	152.4	215.9	1/4	1/4

*Other sizes, lengths and tap specifications are available.

McCROMETER
www.mccrometer.com

3255 WEST STETSON AVENUE • HEMET, CALIFORNIA 92545 USA

TEL: 951-652-6811 • 800-220-2279 • FAX: 951-652-3078

Printed In The U.S.A Lit. #24509-51 Rev.2.7/04-13

Copyright © 1998-2013 McCrometer, Inc. All printed material should not be changed or altered without permission of McCrometer. Any published pricing, technical data, and instructions are subject to change without notice. Contact your McCrometer representative for current pricing, technical data, and instructions. Hong Kong Patents HK1027622 & HK1066054.

MODEL NUMBER CONFIGURATION VH

Type	Size		Materials		Body Style		Bore		Fittings		Face Style	
VH			**A**	**S316L Cone**	**1**	**Universal Body Style***	**S**	**Standard**	**N**	**NPT**	**3**	**Serrated**
	01	1”	R	CPVC Body	X	Other Style	X	Other	J	RC	2	O-Ring Seal
	0C	1½”	X	Other Mat. ‡					X	Other	X	Other
	02	2”							F	Flanged (direct mount)		
	0D	2½”										
	03	3”										
	04	4”										
	06	6”										

*Universal body used for ANSI 150-2500# Class,DIN 2576, 2633, 2635 and JIS 10K

‡Other materials can include the following:

HASTELLOY C-276	S321H
DUPLEX 2205	INCONEL 625
	PVC

NOTES
1. Bold items in table above are standard construction.
2. Combinations of two different materials can also be specified.
3. Plastic materials limited to sizes 1” to 3”. For other sizes please consult factory.
4. Direct mounting is limited to sizes 1” to 3”. For other sizes please consult factory.

Examples:

Model	Description
VH01-A1SN3	Wafer-Cone 1” line size, S316, ANSI Style, NPT Pressure Ports, Serrated Face
VH02-A1SF3	Wafer-Cone 2” line size, S316, ANSI Style, Transmitter Flanged For Direct mounting, Serrated Face

ABBREVIATION

NPT	National Pipe Taper

Design Pressure Limits

1500 psig: -50F to 600F
103 bar: -46C to 315C
Contact factory if other design limits are required.

Technical questions can be answered through a local representative or through our application engineers.

MANUFACTURING STANDARDS

Specific customer requirements can be complied with upon request.

Each meter is shipped with a centering device.

Non-destructive testing can include:

- Hydrostatic Pressure Testing
- Positive Material Inspection
- Dye Penetrant Weld Inspection (“F” Fittings Option Only)

ACCESSORIES

- Accessory Kit: gaskets, long bolts, and nuts
- Alternate cone for different flow range/differential.

REPRESENTED BY:

McCROMETER
www.mccrometer.com
3255 WEST STETSON AVENUE • HEMET, CALIFORNIA 92545 USA
TEL: 951-652-6811 • 800-220-2279 • FAX: 951-652-3078
Printed In The U.S.A Lit. #24509-51 Rev.2.7/04-13
Copyright © 1998-2013 McCrometer, Inc. All printed material should not be changed or altered without permission of McCrometer. Any published pricing, technical data, and instructions are subject to change without notice. Contact your McCrometer representative for current pricing, technical data, and instructions. Hong Kong Patents HK1027622 & HK1066054.

Final Inspection Checklist

Serial Number:	15-3398
Job Reference:	9914535

✓ Meter Body Construction

- Tube Type / Rating
- Tube Material
- Tube Internal Diameter
- Flange Material
- Flanges Parallel
- Face-to-Face Dimension
- Cone Type
- Cone Material
- Cone Centered
- Pressure Ports Free of Burrs
- Fitting Threads Clean
- Name Plate
- Flow Arrow

✓ Standard Technical Documentation

- V-Cone Application Sizing
- Materials Of Construction Report
- Warranty Card

✓ Optional Technical Documentation

- ☑ Calibration Test Report
- ☐ Hydrostatic Pressure Test
- ☐ Dye Penetrant Examination
- ☐ X-Ray Examination
- ☐ Magnetic Particle Examination
- ☐ Certified Mill Test Reports (CMTR's)

Inspected By: PS

Date: 11/24/15

McCROMETER

V-Cone® Application Sizing

Serial #	15-3398	Fluid	WATER
Tag		Fluid State	LIQUID
P.O. Ref.	9914535	End User	
Model	VH03-A1SF3	Market	
		Application	
		Mark/App Code	

Description	3" Wafer
Note	

C_d	0.8844		q	max. Flowrate	250	GPM	McCrometer Eng.	MBB
P_f	150	psiG	Re	max. Reynolds	2.901e+05			
T_f	75	°F	V	max. Velocity	12.14	fps		
ρ	62.13	lb/ft3	ΔP	max. Dp	161.18	inWC		
μ	0.9353	cP	ΔP	min. Dp	1.6118	inWC		
G	1.000	⇐	D	Meter I.D.	2.9000	in		
Z			d	Cone O.D.	2.2038	in		
Y			β	Beta Ratio	0.6500			
k				Turn Down	10			
C_P								
Mw	18.015							
P_b								
T_b								
Z_b								
P_{atm}	14.696	psi						
P_c	3198.8	psi						
T_c	705.16	°F						
F_a	1.000							
aPE	D 6.7e-06	d 6.7e-06						
P_v	0.4302	psi						
P_{loss}	2.836	psi						

⇐ Entered value.

	Re	Cd	Velocity fps	Gas. Exp. Y	ΔP inWC	Flowrate GPM
1	2.901e+05	0.8844	12.14		161.18	250.00
2	2.611e+05	0.8844	10.93		130.56	225.00
3	2.321e+05	0.8844	9.715		103.15	200.00
4	2.031e+05	0.8844	8.500		78.977	175.00
5	1.741e+05	0.8844	7.286		58.024	150.00
6	1.451e+05	0.8844	6.072		40.295	125.00
7	1.160e+05	0.8844	4.857		25.789	100.00
8	8.703e+04	0.8844	3.643		14.506	75.000
9	5.802e+04	0.8844	2.429		6.4471	50.000
10	2.901e+04	0.8844	1.214		1.6118	25.000

Table based on one flow condition (P, T ,Z , k ...) V40 Version 2.0

Record Start Date	11/6/2015
Print Date	11-24-2015

McCROMETER

McCROMETER

V-Cone Calibration Report

Serial Number: 15-3398

Test Number: 15-3398

Model: VH03-A1SF3

Calibration Date: 11/23/2015

Report Date: 11/23/2015

Sold To: Null

Description: 3" Wafer

Notes: 3" Wafer

Inside Diameter (in): 2.9

Beta Ratio: 0.65

Cone Outside Diameter (in): 2.2038

Average Cf: 0.8844

Calibration Report

	Reynolds Number Interval:	SLBF Cf:
1	214162 - 196852	0.8878
2	196852 - 179542	0.8875
3	179542 - 162232	0.8871
4	162232 - 144922	0.8866
5	144922 - 127612	0.8860
6	127612 - 110302	0.8852
7	110302 - 92992	0.8841
8	92992 - 75682	0.8827
9	75682 - 58372	0.8804
10	58372 - 41062	0.8765

Approved By: Luis Leon Pacheco

Luis Leon Pacheco

Test Fluid: Water

Test Stand Instrumentation Traceability Kit Number: V0128

Standard Used: Primary

Test Data

	Water Temperature (°C)	Test Time (seconds)	Collected Mass (kilograms)	Air Temperature (°C)	Barometric Pressure (kPa)	Relative Humidity (%)	Differential Pressure (kPa)	Rate of Flow Reference (m^3/sec)	Reynolds Number ($\times^1/_{1000}$)	Combined Uncertainty (%) at 95% confidence
1	20.80	30.809	375.358	20.04	95.70	34.82	23.8364	0.01218	214	0.37
2	20.80	30.766	225.298	20.04	95.70	34.82	8.6268	0.00732	129	0.22
3	20.80	30.780	71.954	20.04	95.70	34.82	0.9117	0.00234	41	0.21

This calibration was performed using standards traceable to the National Institute of Standards and Technology (NIST), USA. Certificates of traceability for the individual test measurements listed in this report are documented and serialized by the Test Stand Instrumentation Traceability Kit Number identified above and are available upon request. Combined Uncertainty to a 95% confidence level is developed for each test point according to the methods described in the ANSI/NCSL Z540-2-1997. Methods and procedures used in this calibration are in accordance with the McCrometer Flow Laboratory Technical Manual, revision 2.0.

McCrometer, Inc. • 3255 West Stetson Avenue, Hemet, CA 92545, USA
Tel (951) 652-6811 • Fax (951) 652-3078 • Website: http://www.mccrometer.com
Hours: 8am - 4:30pm PST, Monday – Friday

Final Inspection Checklist

Serial Number:	15-3399
Job Reference:	9914535

✓ Meter Body Construction

- Tube Type / Rating
- Tube Material
- Tube Internal Diameter
- Flange Material
- Flanges Parallel
- Face-to-Face Dimension
- Cone Type
- Cone Material
- Cone Centered
- Pressure Ports Free of Burrs
- Fitting Threads Clean
- Name Plate
- Flow Arrow

✓ Standard Technical Documentation

- V-Cone Application Sizing
- Materials Of Construction Report
- Warranty Card

✓ Optional Technical Documentation

- ☑ Calibration Test Report
- ☐ Hydrostatic Pressure Test
- ☐ Dye Penetrant Examination
- ☐ X-Ray Examination
- ☐ Magnetic Particle Examination
- ☐ Certified Mill Test Reports (CMTR's)

Inspected By: PS

Date: 11/24/15

McCROMETER

V-Cone® Application Sizing

Serial #	15-3399
Tag	
P.O. Ref.	9914535
Model	VH03-A1SF3

Fluid	WATER	
Fluid State	LIQUID	
End User		
Market		Mark/App Code
Application		

Description	3" Wafer
Note	

C_d	0.8816		
P_f	150	psiG	
T_f	75	°F	
ρ	62.13	lb/ft3	
μ	0.9353	cP	
G	1.000		⇐
Z			
Y			
k			
C_P			
Mw	18.015		
P_b			
T_b			
Z_b			
P_{atm}	14.696	psi	
P_c	3198.8	psi	
T_c	705.16	°F	
F_a	1.000		
aPE	D 6.7e-06	d 6.7e-06	
P_v	0.4302	psi	
P_{loss}	2.854	psi	

⇐ Entered value.

q	max. Flowrate	250	GPM
Re	max. Reynolds	2.901e+05	
V	max. Velocity	12.14	fps
ΔP	max. Dp	162.20	inWC
ΔP	min. Dp	1.6220	inWC
D	Meter I.D.	2.9000	in
d	Cone O.D.	2.2038	in
β	Beta Ratio	0.6500	
	Turn Down	10	

McCrometer Eng. MBB

	Re	Cd	Velocity fps	Gas. Exp. Y	ΔP inWC	Flowrate GPM
1	2.901e+05	0.8816	12.14		162.20	250.00
2	2.611e+05	0.8816	10.93		131.38	225.00
3	2.321e+05	0.8816	9.715		103.81	200.00
4	2.031e+05	0.8816	8.500		79.479	175.00
5	1.741e+05	0.8816	7.286		58.393	150.00
6	1.451e+05	0.8816	6.072		40.551	125.00
7	1.160e+05	0.8816	4.857		25.952	100.00
8	8.703e+04	0.8816	3.643		14.598	75.000
9	5.802e+04	0.8816	2.429		6.4881	50.000
10	2.901e+04	0.8816	1.214		1.6220	25.000

Table based on one flow condition (P, T ,Z , k ...) V40 Version 2.0

Record Start Date	11/6/2015
Print Date	11-24-2015

McCROMETER

McCROMETER

V-Cone Calibration Report

Serial Number: 15-3399

Test Number: 15-3399

Model: VH03-A1SF3

Calibration Date: 11/23/2015

Report Date: 11/23/2015

Sold To: Null

Description: 3" Wafer

Notes: 3" Wafer

Inside Diameter (in): 2.9

Beta Ratio: 0.65

Cone Outside Diameter (in): 2.2038

Average Cf: 0.8816

Calibration Report

	Reynolds Number Interval:	SLBF Cf:
1	214258 - 197004	0.8860
2	197004 - 179750	0.8856
3	179750 - 162496	0.8851
4	162496 - 145242	0.8845
5	145242 - 127988	0.8837
6	127988 - 110734	0.8827
7	110734 - 93480	0.8813
8	93480 - 76226	0.8794
9	76226 - 58972	0.8765
10	58972 - 41718	0.8716

Approved By: Luis Leon Pacheco

Luis Leon Pacheco

Test Fluid: Water

Test Stand Instrumentation Traceability Kit Number: V0128

Standard Used: Primary

Test Data

	Water Temperature (°C)	Test Time (seconds)	Collected Mass (kilograms)	Air Temperature (°C)	Barometric Pressure (kPa)	Relative Humidity (%)	Differential Pressure (kPa)	Rate of Flow Reference (m^3/sec)	Reynolds Number ($\times^1/_{1000}$)	Combined Uncertainty (%) at 95% confidence
1	20.90	30.756	374.409	20.04	95.70	34.82	23.8877	0.01217	214	0.37
2	20.90	30.891	226.918	20.04	95.70	34.82	8.7422	0.00734	129	0.22
3	20.80	31.004	73.557	20.04	95.70	34.82	0.9471	0.00237	42	0.21

This calibration was performed using standards traceable to the National Institute of Standards and Technology (NIST), USA. Certificates of traceability for the individual test measurements listed in this report are documented and serialized by the Test Stand Instrumentation Traceability Kit Number identified above and are available upon request. Combined Uncertainty to a 95% confidence level is developed for each test point according to the methods described in the ANSI/NCSL Z540-2-1997. Methods and procedures used in this calibration are in accordance with the McCrometer Flow Laboratory Technical Manual, revision 2.0.

McCrometer, Inc. • 3255 West Stetson Avenue, Hemet, CA 92545, USA
Tel (951) 652-6811 • Fax (951) 652-3078 • Website: http://www.mccrometer.com
Hours: 8am - 4:30pm PST, Monday – Friday

Tag Name / ID: FIT-7001		**Transducer/Transmitter Calibration/Verification**	Manufacture: **Seimens/McCrometer**
Contract ID: **15-111**	ISA S20 Sheet		Model Number: **7MF4433-1EA22/VH03-A1SF3**
Ambient Conditions Temperature **60** °C (°F) Pressure **n/a** mm Hg Humidity **n/a** %		Loop Number: **1** ☐ Initial Calibration ☑ Verification	Serial Number: **1X-FD09-9047929/153398** Calibration Range 0 to 162 DP **0** to **250** **gpm**

1. Visual Inspection: Mechanical connections ☑ Finish ☑ Nameplate/ID Tag ☑ Mounted at correct height ☑
2. Electrical: Conduit Connections ☑ Terminal/Wire Labels ☑ Conduit ID ☐
3. Calibration Proof test at: zero
4. Action: Direct ☑ Indirect ☐ Linear ☐ Non-linear ☐ Square Root ☑
5. Loop Voltage **24 VDC** 4-Wire ☐ 2-Wire ☑
6. Load Impedance **N/A** ohms max @ 24 vdc

Calibration Points

%	Input DP	Expected Output (mADC)	Meter EU GPM	As Found Data: Output Increase	As Found Data: Output Decrease	As Found Data: Maximum Output Error	As Left Data: Output Increase	As Left Data: Output Decrease	As Left Data: Maximum Output Error
0	**0.00**	**4.00**	**0.00**	0	0	± 0	0	0	± 0
10	-					±			±
20	-					±			±
25		**8.00**	**62.50**	0	0	± 0	0	0	± 0
30	-					±			±
40	-					±			±
50	**40.29**	**12.00**	**125.00**	0	0	± 0	0	0	± 0
60	-		-			±			±
70	-		-			±			±
75		**16.00**	**187.50**	0	0	± 0	0	0	± 0
80	-		-			±			±
90	-		-			±			±
100	**161.80**	**20.00**	**250.00**	0	0	± 0	0	0	± 0

Test Equipment Used	Model No:	Serial No:	Calibration/Certification Date
☑ Fluke 789	789	14970085	February 7, 2016
☑ Emerson Filed Calibrator	375	12061955	N/A
☐			
☐			
☐			
☐			
☐			
☐			
☐			

Comments Mcrometer Vcone Fitted with Seimens DP transmimtter and setup per Vcone cal parameteres
Zero of transmitter performed in field after media introduced to flow meter and stablized
Span verifed in field with actual field conditions and flow rate and visual DP recorded in Hart Communicator

Print Name: Robbie Satriana DCN 1/14/2016
Signed By: Robbie Satriana Date 1/14/2016
Approved By: Preston Patterson Date 1/27/2016

I&C Solutions LLC
4485 Irving Blvd
Albuquerque, NM 87114
505-821-8960 fax 505-821-8970

Tag Name / ID: FIT-7002		**Transducer/Transmitter Calibration/Verification**	Manufacture: **Seimens/McCrometer**
Contract ID: **15-111**	ISA S20 Sheet		Model Number: **7MF4433-1EA22/VH03-A1SF3**
Ambient Conditions Temperature **60** °C (°F) Pressure **n/a** mm Hg Humidity **n/a** %		Loop Number: **1** ☐ Initial Calibration ☑ Verification	Serial Number: **1X-FD09-9047930/153399** Calibration Range 0 to 162 DP **0** to **250** **gpm**

1. Visual Inspection: Mechanical connections ☑ Finish ☑ Nameplate/ID Tag ☑ Mounted at correct height ☑
2. Electrical: Conduit Connections ☑ Terminal/Wire Labels ☑ Conduit ID ☐
3. Calibration Proof test at: zero
4. Action: Direct ☑ Indirect ☐ Linear ☐ Non-linear ☐ Square Root ☑
5. Loop Voltage **24 VDC** 4-Wire ☐ 2-Wire ☑
6. Load Impedance **N/A** ohms max @ 24 vdc

Calibration Points

%	Input DP	Expected Output (mADC)	Meter EU GPM	As Found Data: Output Increase	As Found Data: Output Decrease	As Found Data: Maximum Output Error	As Left Data: Output Increase	As Left Data: Output Decrease	As Left Data: Maximum Output Error
0	**0.00**	**4.00**	**0.00**	0	0	± 0	0	0	± 0
10	-					±			±
20	-					±			±
25		**8.00**	**62.50**	0	0	± 0	0	0	± 0
30	-					±			±
40	-					±			±
50	**40.55**	**12.00**	**125.00**	0	0	± 0	0	0	± 0
60	-		-			±			±
70	-		-			±			±
75		**16.00**	**187.50**	0	0	± 0	0	0	± 0
80	-		-			±			±
90	-		-			±			±
100	**162.20**	**20.00**	**250.00**	0	0	± 0	0	0	± 0

Test Equipment Used	Model No:	Serial No:	Calibration/Certification Date
☑ Fluke 789	789	14970085	February 7, 2016
☑ Emerson Filed Calibrator	375	12061955	N/A
☐			
☐			
☐			
☐			
☐			
☐			
☐			

Comments Mcrometer Vcone Fitted with Seimens DP transmimtter and setup per Vcone cal parameteres
Zero of transmitter performed in field after media introduced to flow meter and stablized
Span verifed in field with actual field conditions and flow rate and visual DP recorded in Hart Communicator

Print Name: Robbie Satriana DCN 1/9/2016
Signed By: Robbie Satriana Date 1/9/2016
Approved By: Preston Patterson Date 1/27/2016

I&C Solutions LLC
4485 Irving Blvd
Albuquerque, NM 87114
505-821-8960 fax 505-821-8970

Triac "V" Series Ball Valves are ideal for achieving more precise control with the simplicity and sealing features of a ball valve. We offer them 1/2" – 4" in a 3-piece design and 1/2"– 6" flanged. The standard "V" notch options are 30, 60 & 90. While they are available as manual valves, we specialize in automating them to suit your particular control requirements.

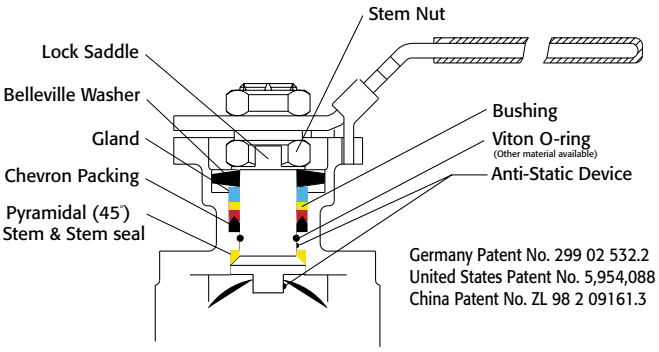

Easy to Automate!

See automated data sheets for pre-sized assemblies

Pneumatic

Electric

TRIAC® CONTROLS

"V" Series Control Port Ball Valves

Sizes 1/2" – 6"

3 Piece and 150# Flanged

316SS or WCB

30, 60 & 90 "V" Notch Standard
Others on Request

TA-Luft 2002, Sec.5.3.6.4
TA-Luft Certified for Low Emissions
VDI 2440 Nov.2000, Sec.3.3.1.3

HOW TO ORDER MANUAL VALVES

SAMPLE PART #

V8C-TH-0200-XXX

- V Port
- Valve Series
- Carbon Steel
- Threaded Ends
- Valve Size
- Seat Material
- Special Designation
- Additional Special Designation (V30, V60 or V90)

See part number matrix for itemized options

"V" Series Control Port Ball Valves

A-T Controls, Inc.
9955 International Blvd.
Cincinnati, Ohio 45246
www.atcontrols.com
PHONE (513) 247-5465
FAX (513) 247-5462
sales@atcontrols.com

VM-(A)-20130430
Copyright 2013 A-T Controls, Inc.

"V" Series

"V" Series Flow Coefficients- Cv Chart

Valve Size	Ball Angle	0%	15%	20%	30%	40%	50%	60%	70%	80%	90%	100%
1/2"	30	0	0.1	0.1	0.2	0.3	0.5	0.8	1.1	1.6	2.2	2.6
	60	0	0.1	0.1	0.3	0.5	0.9	1.4	2	3.3	4.4	6
	90	0	0.1	0.2	0.4	0.6	0.9	1.5	2.2	3.8	5.4	6.9
3/4"	30	0	0.1	0.2	0.5	0.7	1.1	1.8	2.4	3.3	4.5	5.4
	60	0	0.1	0.2	0.7	1	1.7	2.8	4	6.5	9	12
	90	0	0.2	0.4	0.8	1.2	2	3.1	4.6	8	11.3	14
1"	30	0	0.1	0.3	0.8	1.3	2.3	3.5	5.1	9.8	8.5	10
	60	0	0.2	0.4	1.1	1.8	3.4	5.3	7.9	12.3	15.3	21
	90	0	0.2	0.6	1.8	3.4	5.1	8.1	11.4	16	21	29
1 1/4"	30	0	0.2	0.4	1.1	2	3.7	5.5	8	10	13	15
	60	0	0.2	0.6	1.8	3	5.5	9.5	12.8	19	26	39
	90	0	0.3	0.8	2	5	8	14	19	28	39	55
1 1/2"	30	0	0.3	0.6	1.6	3	5	7.5	11	14	17	20
	60	0	0.4	0.8	2.5	4	8	13	19	27	40	52
	90	0	0.4	0.9	3.5	7	13	20	31	42	63	78
2"	**30**	**0**	**0.4**	**1.2**	**3.8**	**6**	**10**	**15**	**23**	**31**	**43**	**60**
	60	0	0.4	1.5	4.6	9	16.5	27	39	55	83	110
	90	0	0.5	2	6	12	22	35	45	70	105	135
2 1/2"	30	0	0.4	1	4	8	12	18	28	37	62	75
	60	0	0.4	1.5	5	10	21	34	53	75	103	150
	90	0	0.5	1.7	7	14	28	48	70	106	160	218
3"	30	0	0.5	1.2	4	8	14	23	33	46	65	82
	60	0	0.5	2.5	6	14	25	40	65	91	128	165
	90	0	0.7	3.5	8	18	35	60	90	135	205	310
4"	30	0	0.6	2	6	15	29	48	71	100	130	159
	60	**0**	**0.7**	**3**	**11**	**25**	**40**	**59**	**90**	**141**	**212**	**356**
	90	0	1	3.5	16	40	75	125	190	295	442	670
6"	30	0	0.9	3.2	14	33	60	103	155	220	280	350
	60	0	2	5	22	60	110	190	285	416	586	800
	90	0	3	8	35	90	160	280	425	650	970	1480
F_L		0	0.96	0.95	0.94	0.93	0.92	0.9	0.88	0.86	0.82	0.75
Xt		0	0.98	0.77	0.71	0.67	0.64	0.63	0.62	0.55	0.43	0.4

60 DEGREE BALL

Pressure vs. Temperature Charts 1"– 6"

150# Flanged Design

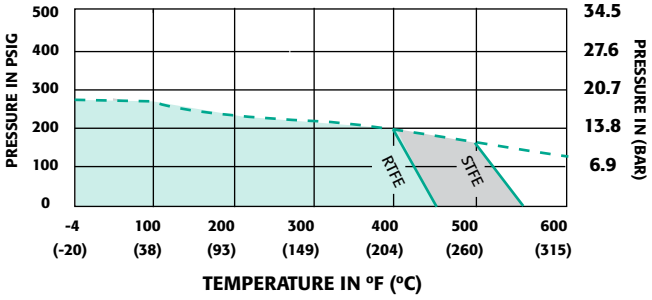

NOTE: Dotted line shows the rating for valve body. Solid line shows the rating for valve seat. Both ratings need to be consulted when determining the limitation of the valve for specific application.

Consult factory for other seat material.

3-piece Design

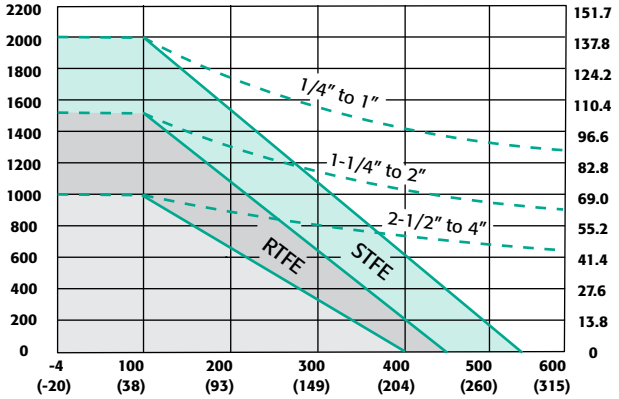

"V" Series

Triac "V" port control valves are available with 30V, 60V & 90V notch. V port valves offer better and more consistent control than traditional round ported ball valves. We offer this valve with the control port cast and machined into the ball, not in the seat. This allows for much better flow characteristics and eliminates the need to replace seats. The 30 option allows for finer tapered control throughout the valve rotation and the 60 & 90 offers a larger Cv in addition to controlled flow.

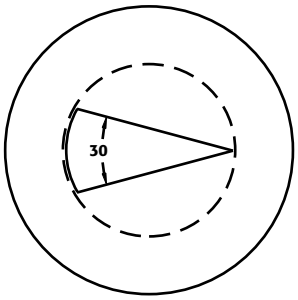

30 V-Port

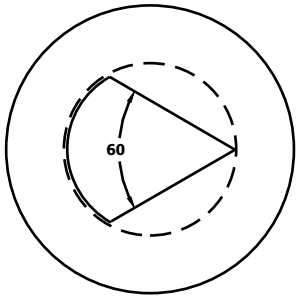

60 V-Port

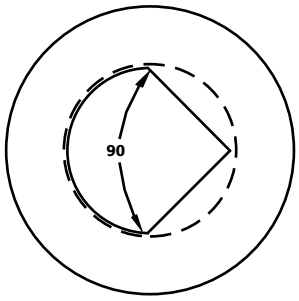

90 V-Port

The 50/50 seat is standard with all V port valves. The 50% SST powder and 50% PTFE offers both strength and superior sealing properties.

"V" Series
3 Piece

88 Series
V-Port
Control Valve

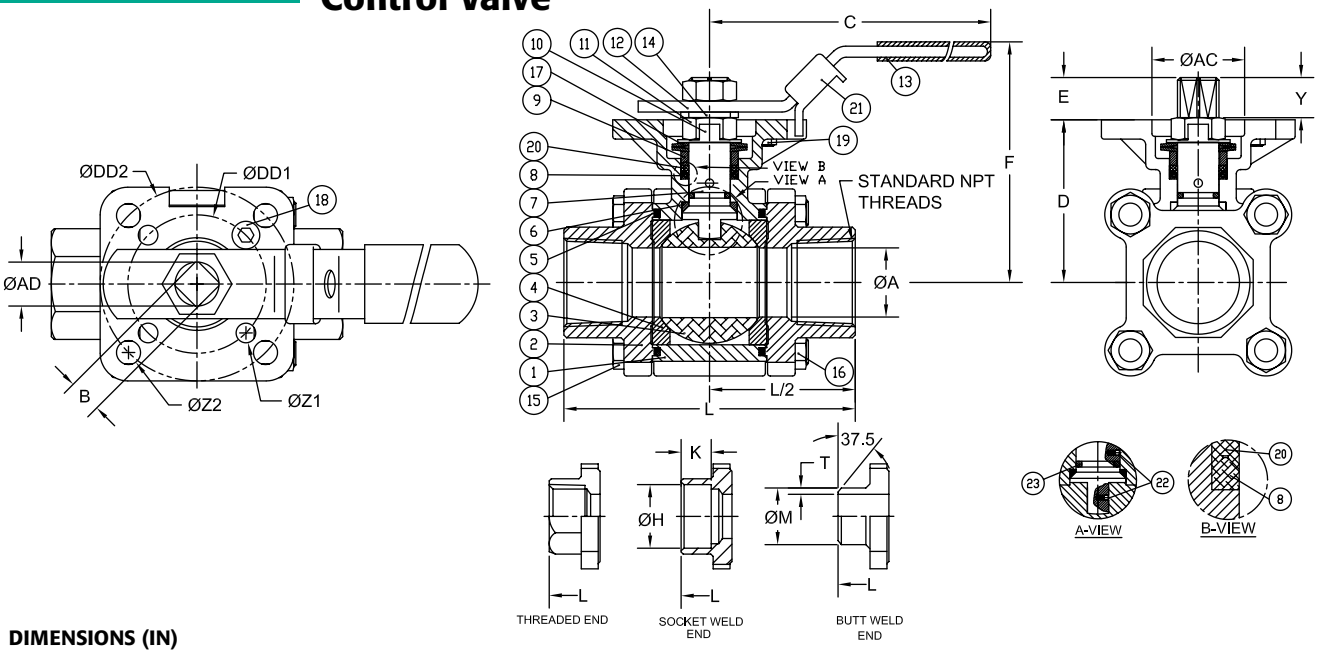

DIMENSIONS (IN)

SIZE	ØA	B	C	D	E	F	H	K	L	M	T	Y	AC	AD	DD1	DD2	ØZ2	ØZ1	(LBS)	ISO5211
1/2"	0.59	0.354	5.47	1.66	0.25	3.00	0.85	0.39	2.85	0.85	0.06	0.25	1.07	0.44	1.654	1.969	0.28	0.28	2.0	F04/F05
3/4"	0.79	0.354	5.47	1.83	0.33	3.20	1.07	0.51	3.36	1.07	0.06	0.33	1.07	0.44	1.969	2.756	0.34	0.28	3.0	FO5/F07
1"	0.98	0.433	6.50	2.31	0.41	3.86	1.34	0.51	4.15	1.34	0.06	0.41	1.34	0.56	1.969	2.756	0.34	0.28	4.5	FO5/F07
1-1/4"	1.26	0.433	6.50	2.46	0.41	4.00	1.69	0.51	4.37	1.68	0.06	0.41	1.34	0.56	1.969	2.756	0.34	0.28	6.0	FO5/F07
1-1/2"	1.50	0.551	8.46	3.11	0.53	5.04	1.92	0.51	5.01	1.91	0.06	0.53	1.54	0.74	1.969	2.756	0.34	0.28	10.0	FO5/F07
2"	1.97	0.551	8.46	3.42	0.53	5.35	2.40	0.63	5.62	2.38	0.06	0.53	1.54	0.74	1.969	2.756	0.35	0.30	13.0	FO5/F07
2-1/2"	2.56	0.748	10.31	4.28	0.66	6.60	2.89	0.63	7.28	3.00	N/A	0.66	2.09	0.94	2.756	4.016	0.47	0.39	26.0	FO7/F10
3"	3.15	0.748	10.31	4.63	0.70	6.96	3.54	0.63	8.07	3.54	N/A	0.70	2.09	0.94	2.756	4.016	0.47	0.39	34.0	FO7/F10
4"	3.94	0.748	12.28	5.26	0.66	7.59	4.54	0.79	9.45	4.57	N/A	0.66	2.09	0.94	2.756	4.016	0.47	0.39	52.0	FO7/F10

"V" Series
Flanged

90 Series
V-Port
Control Valve
Flanged

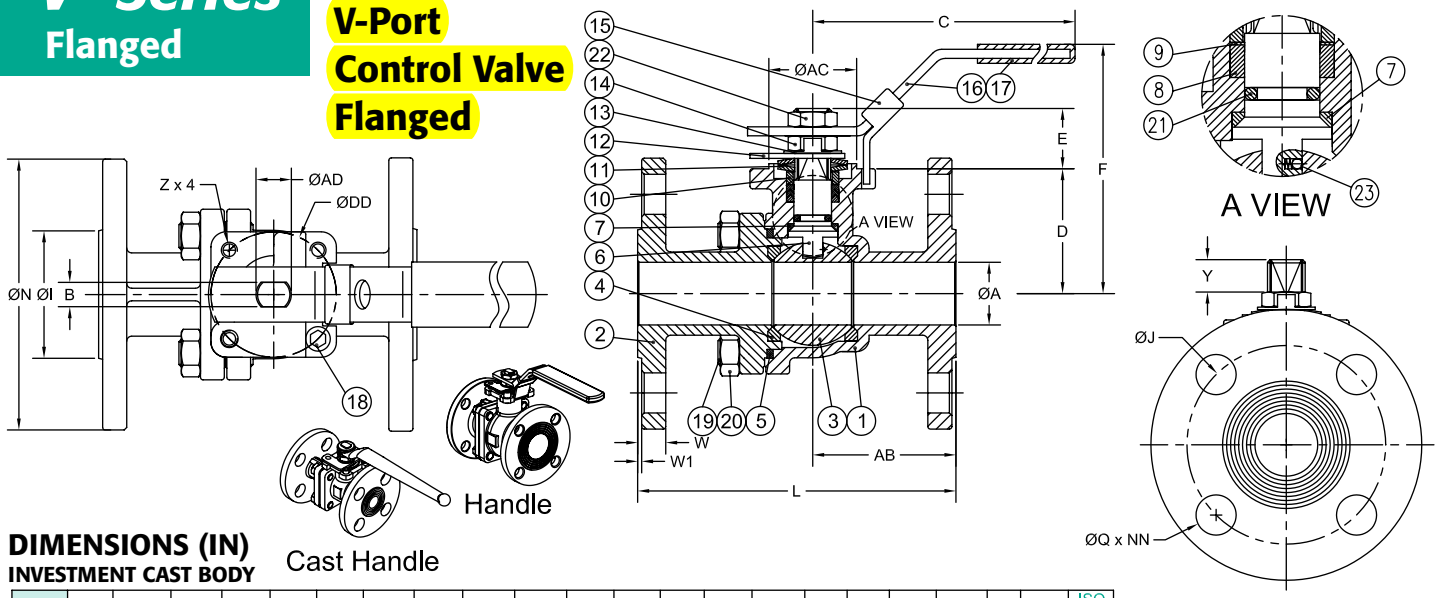

DIMENSIONS (IN)
INVESTMENT CAST BODY

SIZE	A	B	C	D	E	F	I	J	L	N	Q	W	W1	Y	Z	AB	AC	AD	DD	NN	(LBS)	ISO 5211
1/2"	0.59	0.315	6.69	1.34	0.92	3.15	1.47	2.38	4.26	3.50	0.63	0.44	0.06	0.36	M5	1.82	1.17	0.43	1.654	4	3.7	F04
3/4"	0.79	0.315	6.69	1.65	0.94	3.43	1.82	2.75	4.62	3.88	0.63	0.44	0.06	0.40	M5	2.17	1.17	0.43	1.654	4	4.6	F04
1"	0.98	0.382	8.05	1.95	0.94	3.85	2.08	3.13	5.00	4.26	0.63	0.44	0.06	0.32	M6	2.20	1.37	0.56	1.969	4	6.8	F05
1-1/2"	1.50	0.472	10.28	3.08	1.37	6.02	2.88	3.88	6.50	5.00	0.63	0.56	0.06	0.58	M8	2.81	2.17	0.75	2.756	4	13.6	F07
2"	1.97	0.472	10.28	3.40	1.37	6.38	3.62	4.75	7.02	6.00	0.75	0.63	0.06	0.58	M8	3.38	2.17	0.75	2.756	4	19.2	F07
2-1/2"	2.56	0.472	10.28	3.83	1.37	6.81	4.12	5.50	7.49	7.00	0.75	0.69	0.06	0.58	M8	3.02	2.17	0.75	2.756	4	30.0	F07
3"	3.15	0.591	13.94	4.23	1.81	6.95	5.00	6.00	8.01	7.50	0.75	0.75	0.06	0.93	M10	4.01	2.76	0.94	4.016	4	41.0	F10
4"	3.94	0.591	13.94	4.82	1.79	7.52	6.19	7.50	9.04	9.00	0.75	0.94	0.06	0.93	M10	4.06	2.76	0.94	4.016	8	65.0	F10

For 6" valve dimensions please see D9 brochure.

Viton® is a registered trademark of E.I. DuPont de Nemours.

A-T Controls reserves the right to change product designs and technical/dimensional specifications without notice.

A-T Controls, Inc.

9955 International Blvd.
Cincinnati, Ohio 45246
www.atcontrols.com

PHONE (513) 247-5465
FAX (513) 247-5462
sales@atcontrols.com

TRIAC CONTROLS

Electric Actuators

WE Series Weatherproof
CSA Approved TYPE 4 & 4X
350-80,000 In-lbs. torque

XE Series Explosion Proof
ATEX Certified E Ex d IIB T4
690-25,900 In-lbs. torque

AWWA C540-93

C US 201383 TYPE 4 & 4X

ATEX II 2 G E Ex d IIB T4

IECEx

WE-350

The WE-350 Electric Actuator is specifically designed to operate small size ball valves (1" and less), dampers and other quarter-turn devices.

Features

- Compact and light weight
- High resistance to corrosion due to hard anodizing on inside and outside with polyester powder coating on external surface
- Multi-voltage (AC85-265V/1PH, 24VDC)
- Standard space heater (0.5W)
- Weather proof (IP67)
- Push Button and Manual lever
- Wide, easy mounting base standard to ISO5211 (F03/F04/F05)
- Standard four limit switches
- Captive cover bolts
- Mechanical position indicator & LED lamp indicators (Open/Close)

Construction

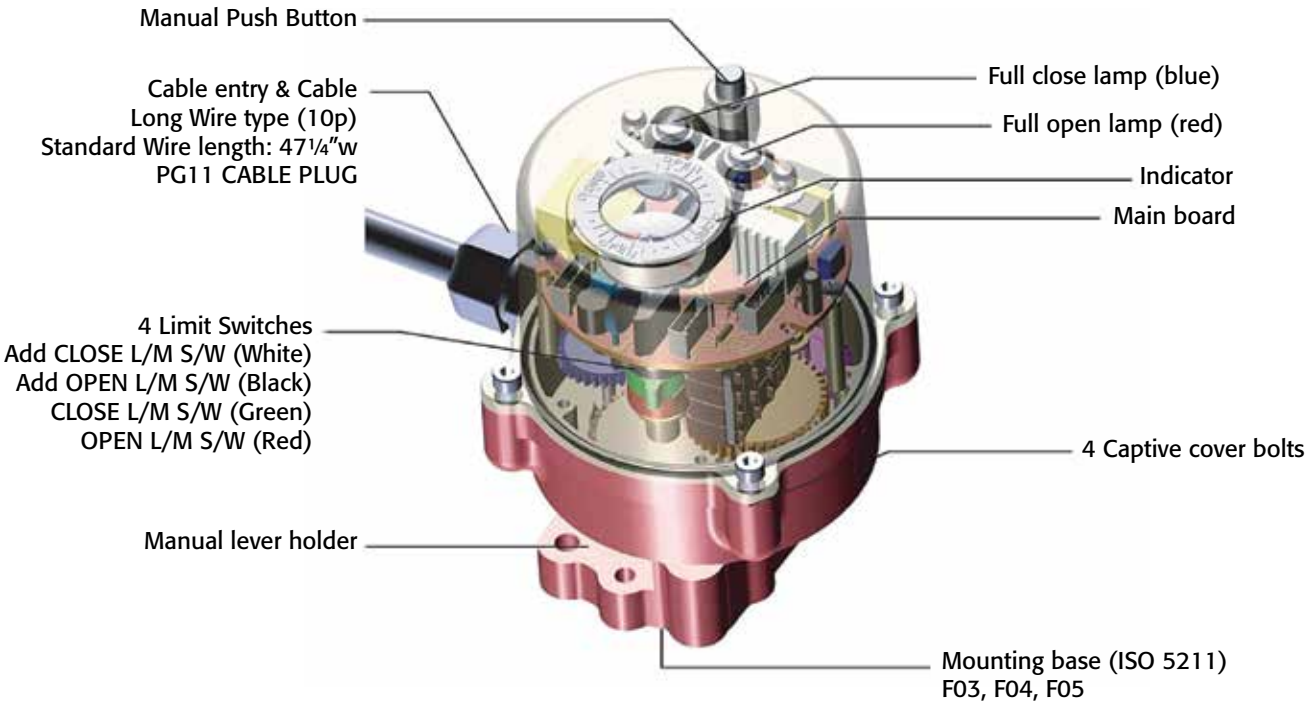

Performance

Type (Model)	Maximum Output Torque	Operating Time 60/50 Hz	Mounting Size	Electric Motor Stop	Suppling Power & Rating Current (A) 60/50Hz, 1 Phase			Duty Cycle IEC34-1	Manual Level Angle	Weight
	In-Lbs.	90°	ISO5211	A	110VAC	220VAC	24VDC	S4		Lbs.
WE-350	354	12 sec.	F03, F04, F05	2A	.12	.06	.46	50%	90°	2.65
WE-350HS	270	6.5 sec.			.065	.033	.25			

Dimensions

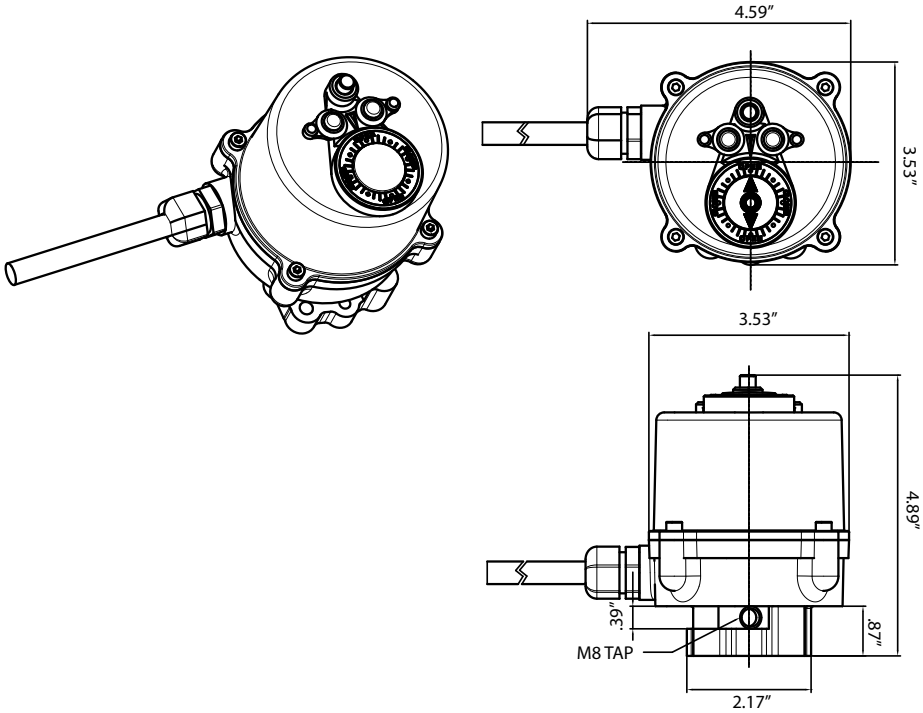

ENCLOSURE: IP67 (NEMA 4, 4X)
TORQUE: 354 In-lbs
OPERATION TIME: 10sec
POSITION SWITCH: 4 SPDT SWITCH
CABLE ENTRY: PG 11 x 1
MOUNTING FLANGE: F03/F04/F05 acc to DIN/ISO5211

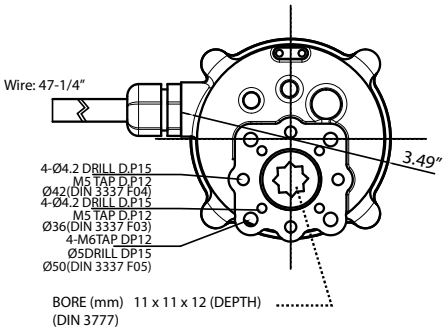

Wiring Connection

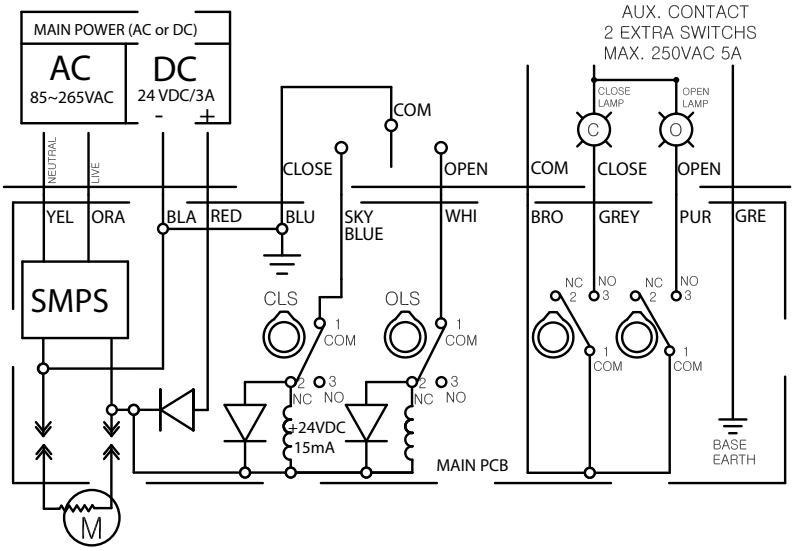

WE-500

The WE-500 Electric Actuator is an extremely rugged design actuator used for small ball valves (2" and less), dampers and other quarter-turn devices. The actuator is TYPE 4, 4X and includes a visual indicator, two auxiliary switches and a compartment heater. A convenient wrench manual override shaft is standard on the WE-500. This actuator is the clear choice when a compact, efficient electric actuator is required!

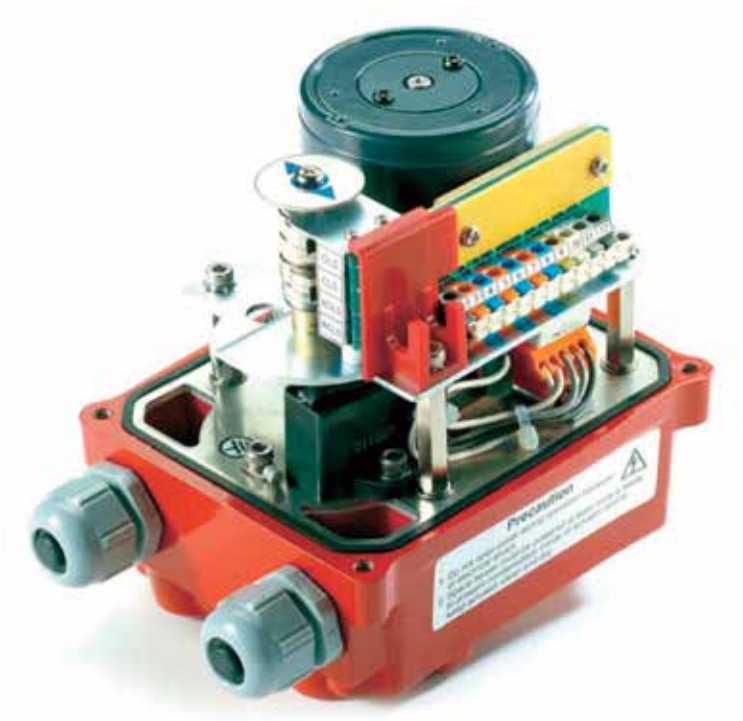

Features

- Compact and light due to high grade aluminum alloy housing.
- High resistance to corrosion due to hard
- anodizing on inside and outside with polyester powder coating on external surface
- Output torque: 530 In-lbs.
- The actuator motor is a reversible, high torque and low current design.
- Weatherproof (IP67, NEMA 4, 4X)

Standard Configuration

- Manual override
- Wide, easy mounting base standard to ISO5211(F03/F05/F07)
- Standard four limit switches. Two for operation, 2 auxilliary dry contacts
- Captive cover bolts
- Space heater
- Limit switches for tight, easy setting
- Terminal block (11P)
- Standard color : Red

Optional Configuration

Position Indication Unit (Potentiometer kit, PIU)

High resolution potentiometer with precisely machined gearing directly engaged with drive shaft provides continuous monitoring of position of valve and actuator.

TMC3 Electronic Modulating Card

- Auto Calibration for Easy Setup
- 10 Bit Microprocessor controller for precise positioning and control
- 4-20mA, 1-5mA, 0-10 VDC, 1-5 VDC, 0-135 Ohm or Command Signal Potentiometer
- TMC3 can be programmed to Fail in Place, Fail CW, or Fail CCW on loss of command signal
- Characterized Control options: Linear, Quick Opening (Square Root), or Equal Percentage (Square)
- OnBoard 4-20 mA transmitter (standard)

AC/DC 24V Control Unit

Dip Switch

Mode	1	2
DC	ON	OFF
AC	OFF	ON

Performance

Type (Model)	Maximum Output Torque	Operating Time 60/50 Hz	Mounting Size	Full Load Amps			Locked Rotor Amps			Duty Cycle	Number of Handle Turns	Weight
				AC 1PH. 50/60Hz		AC/DC	AC 1PH. 50/60Hz		AC/DC			
	In-Lbs.	90°	ISO5211	110V	220V	24V	110V	220V	24V	S2	N	Lbs.
WE-500	530	12/14	F03/F05/F07	0.4	0.2	0.8	0.5	0.25	2.5	70%	8	6.61

Standard Specification

Enclosure..... Weatherproof enclosure IP67, NEMA 4, 4X
Power Supply..... 110/220V AC 1PH, 50/60Hz, ± 10%, 24V AC/DC
Duty cycle..... 70%
Motor..... Class F Reversible motor
Limit switches..... Open/Close, SPDT, 5A 125 VAC, 3A 250 VAC, 0.4A125 VDC, 0.2A 250 VDC
Additional limit switches..... Open/Close, SPDT, 5A 1252 VAC, 3A 250 VAC, 0.4A 125 VDC, 0.2A 250 VDC
Space heater..... 2W (110/220V AC) Anti-condensation
Manual override..... Drive Nut (hexagon design)
Cable conduit..... Two 1/2" NPT
Movement angle..... 320° ±10°
Ambient temperature..... -4°F - 158°F (optional -40° Low Temp Kit)
External coating..... Polyester powder coating

Options Specification

Potentiometer unit (1K)
(TMC) Electronic Modulating Card
4-20mA, 1-5mA, 0-10 VDC, 1-5 VDC,
0-135 Ohm Command Signal
Current position transmitter
(0utput 4~20mA DC)
Multi(24VAC/DC)
DC motor (24VDC)
Local control unit
- remote/local/stop
- open/close

Dimensions

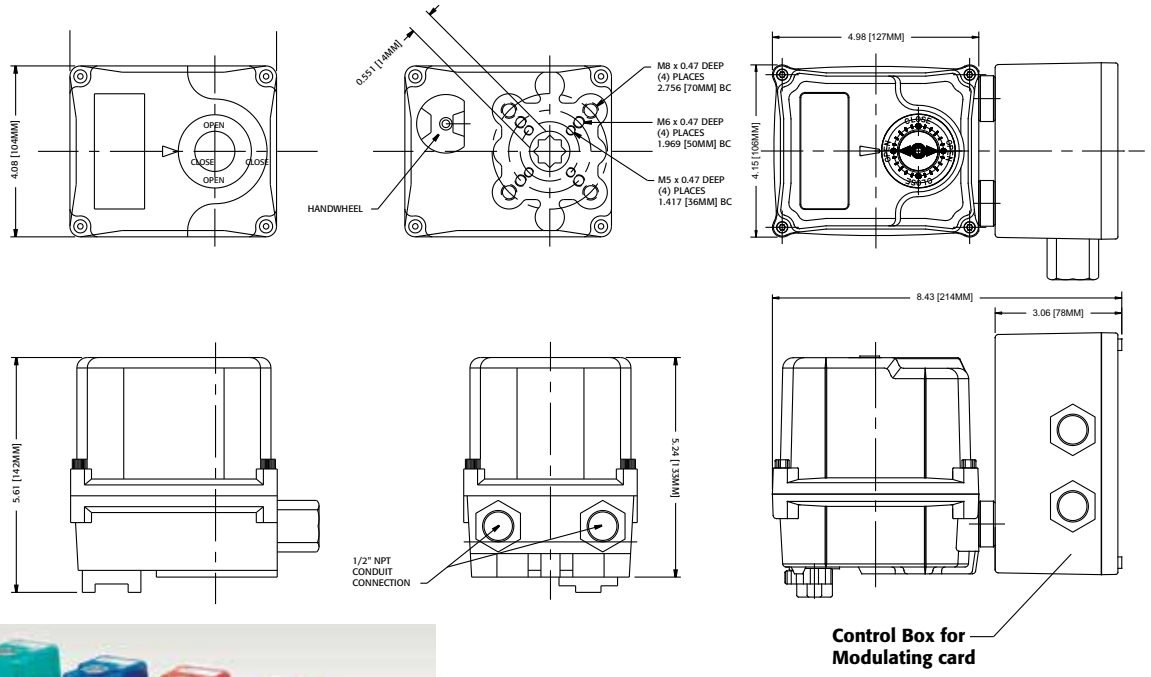

BUTTERFLY VALVES
BALL VALVES
DAMPER VALVES
PLUG VALVES

Electric Actuators WE/XE

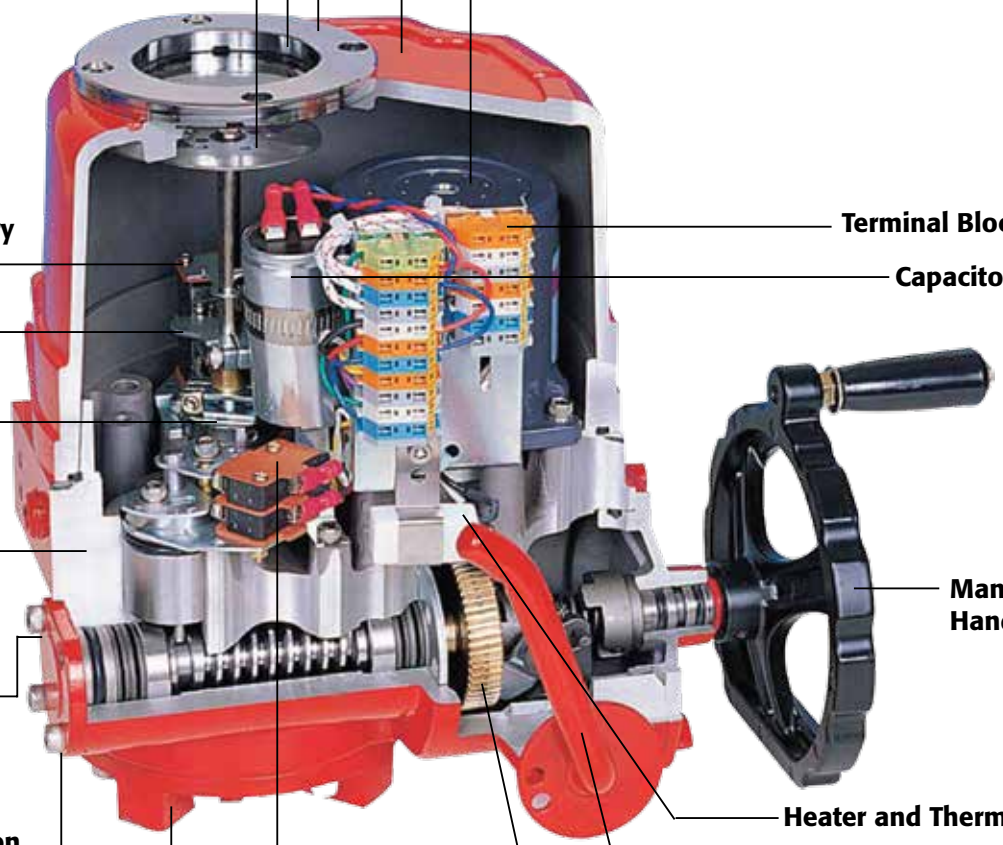

WE-690 - 25900

Terminal block

- Extra terminals for customer's convenience
- Spring Loaded Terminal Strip Provides Secure Connection

Heater

- Ceramic housing with thermostat to eliminate condensation (7-10 watt Standard).
- Optional High Wattage Heater for Low Temp applications to -40°

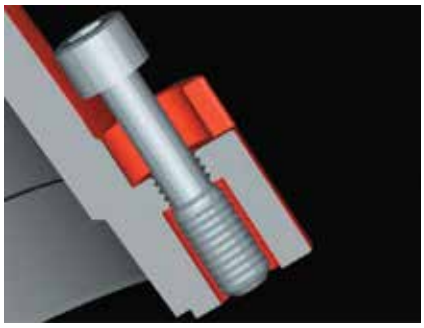

Captive cover bolt

- Cover bolts are specially designed to prevent loosening during maintenance or installation
- All external bolts are stainless steel for rust prevention

Indicator sustained by spring

- Direction of visual indicator is set by factory
- To change its direction simply grip the indicator plate and rotate to the new position
- Spring beneath indicator plate sustains the set position
- No need to loosen screw and tighten it again

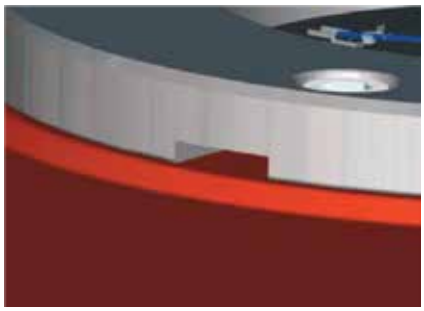

Slot on window cover for draining water

- A drain slot is provided to eliminate water buildup on window

WE/XE Series

WE NEMA 4, 4X & 6

XE NEMA 4, 4X, 6 & 7

SE NEMA 4, 4X, 6 & 9 IP68

Acutator Model	Output Torque	90° Cycle Time (sec)	Motor Size	Full Load Amps					Locked Rotor Amps					Handwheel Turns	Weight
				AC/DC	1 Phase		3 Phase		AC/DC	1 Phase		3 Phase			
WE / XE	In-Lbs.	60 / 50 Hz	Watts	24V	110V/60Hz	220V/60Hz	380V	440V	24V	110V/60Hz	220V/60Hz	380V	440V	N	Lbs.
-690	690	13 / 16	15	5	1.2	0.6	N/A	N/A	12.8	1.4	0.7	N/A	N/A	10	16.4
-1350	1350	21 / 25	40	6	2	1	0.28	0.36	16.9	2.5	1.2	0.75	0.66	11	36.7
-1700	1700	21 / 25	40	7.4	2.3	1.1	0.28	0.36	16.9	2.5	1.2	0.75	0.66	11	36.7
-2640	2640	26 / 31	40	8.9	2.3	1.3	0.27	0.34	30.8	2.9	1.4	1	0.87	13.5	48.6
-4400	4400	26 / 31	90	N/A	4.5	1.9	0.42	0.47	N/A	5	2.4	1.73	1.5	13.5	50.8
-5200	5200	26 / 31	90	N/A	4.5	2	0.42	0.47	N/A	5	2.4	1.73	1.5	13.5	50.8
-6900	6900	31 / 37	180	N/A	5.1	2.4	0.61	0.67	N/A	7.3	3.8	2.73	2.38	16.5	64
-10500	10500	31 / 37	180	N/A	5.4	3.4	0.61	0.67	N/A	7.3	3.8	2.73	2.38	16.5	64
-17500	17500	95 / 112	180	N/A	5.8	2.4	0.61	0.67	N/A	7.3	3.8	2.73	2.38	49.5	167
-25900	25900	95 / 112	180	N/A	6.3	3.4	0.61	0.67	N/A	7.3	3.8	2.73	2.38	49.5	167

Rev.20130924

Standard Specifications

Enclosure.....Weatherproof enclosure, IP67, TYPE 4, 4X, 6
AWWA.....Conforms to AWWA C540-93 requirements
Power supply.....110/220V AC 1PH, 220/380/440/460/480VAC, 3 Phase, 50/60Hz, ±10%
Control power supply.....110/220V AC 1PH, 50/60Hz, ±10%
Duty cycle(on-off).....70% Max 1800 start/hour
Duty cycle(modulating).....70% Max 1800 start/hour
Motor.....Class F Reversible Induction motor
Limit switches.....Open / Close, SPDT, 16A 1/2HP 125/250VAC, 0.6A 125VDC, 0.3A 250VDC
Additional limit switches.....Open / Close, SPDT, 16A 1/2HP 125/250VAC, 0.6A 125VDC, 0.3A 250VDC
Torque switches.....Open / Close, SPDT, 16A 1/2HP 125/250VAC, 0.6A 125VDC, 0.3A 250VDC (except WE/XE-690)
Stall protection.....Built-in thermal protection, Open 302°F (150°C) / Close 207°F (97°C)
Travel angle.....90° ± 10°
Indicator.....Continuous position indicator
Manual override.....Declutching mechanism
Self locking.....Provided by double worm gearing
Mechanical stopper.....Open / Close (external adjustable screws)
Space heater.....7-10W (110/220V AC) Anti-condensation
Cable Conduit.....Two 3/4" NPT
Lubrication.....Grease moly (EP type)
Terminal block.....Spring loaded lever push type
Materials.....Steel, Aluminium alloy, AI bronze, Polycarbonate
Ambient temperature.....-4°F —158°F (optional -40° Low Temp Kit)
Ambient humidity.....90% RH Max. (non-condensing)
External coating.....Anodizing treatment before Dry powder, Polyester, Munsell no. 5R 3.5/12

Options Specifications

ATEX II 2 G
EEx d IIB T4

Explosion-Proof enclosure II 2 G, E Ex d IIB T4, IP67 ..... ATEX certification
Designed to comply with NEMA 7 Explosion Proof
Watertight enclosure (IP68 10M 72HR) ..... SE/XE Series
Potentiometer unit (1K ~10K) ..... WE/XE Series
Proportional control unit (input, output 0~10V DC, 4~20mA DC) ..... WE/XE Series
Semi-Integral control unit (Local/Remote Selector Switches) ..... except WE/XE-690
Intelligent Digital control unit (Local/Remote Selector Switches) ..... except WE/XE-690
Current position transmitter (output 4-20mA DC) ..... WE/XE Series
Extension 120º, 180º, 270º turn ..... except WE/XE-17500, 25900
Duty Cycle 70% max (in Ambient temperature) ..... except WE/XE-690
DC motor (24V DC) ..... WE/XE-690C—WE/XE-2640C
AC/DC 24V control ..... WE/XE-690A—WE/XE-2640A
Lever plate actuator ..... except WE/XE-690
Signal lamp unit (red-close, green-open, yellow-over torque)
Fire Proofing Actuator 1050 ±5ºC/50 min ..... Consult factory
Fire Proofing Actuator 250 ±5ºC/150 min ..... Consult factory

Explosion Proof Enclosure
- ATEX Certification
- Designed to comply with NEMA 7 Explosion Proof

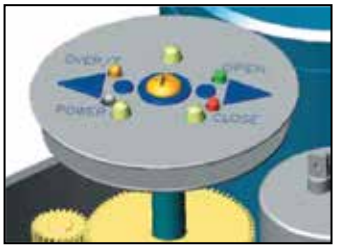

Signal LED Unit
Large indicator with monitoring lamps (Over torque, open and close)

Fire Proofing Acuator

Removable Drive Bushing

High Speed Electric Actuators

Model	Output Torque	Speed (60Hz)	Torque Switch Setting
WE-690*HS2	290 In-Lbs	4.5 seconds	N/A
WE-690*HS1	400 In-Lbs	7.0 seconds	N/A
WE-1350*HS2	840 In-Lbs	7.0 seconds	1,350 In-Lbs
WE-1350*HS1	1,200 In-Lbs	10.5 seconds	1,350 In-Lbs
WE-2640*HS2	1,390 In-Lbs	8.5 seconds	2,640 In-Lbs
WE-2640*HS1	2,050 In-Lbs	13.0 seconds	2,640 In-Lbs
WE-4400*HS2	2,350 In-Lbs	8.5 seconds	4,400 In-Lbs
WE-4400*HS1	3,500 In-Lbs	13.0 seconds	4,400 In-Lbs
WE-6900*HS2	4,500 In-Lbs	10.5 seconds	6,900 In-Lbs
WE-10500*HS1	6,700 In-Lbs	15.5 seconds	10,500 In-Lbs
WE-17500*HS2	12,000 In-Lbs	31.0 seconds	17,500 In-Lbs
WE-25900*HS1	18,000 In-Lbs	47.0 seconds	25,900 In-Lbs

Motor specifications remain the same.
*Must specify voltage - see part number matrix on back cover.

Modulating Options for WE-500-25900

Modulating Cards

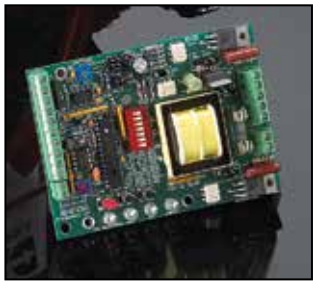

TMC3 Electronic Modulating Card

- Auto Calibration for Easy Setup
- 10 Bit Microprocessor controller for precise positioning and control
- 4-20mA, 1-5mA, 0-10 VDC, 1-5 VDC, 0-135 Ohm or Command Signal Potentiometer
- TMC3 Can be programmed to Fall in Place, Fail CW, or Fail CCW on loss of command signal
- Characterized Control-Linear, quick opening (Square root), or Equal Percentage (Square)
- OnBoard 4-20 mA transmitter (standard)

TDC Electronic Modulating Card

- 450 Point Resolution, 16 Bit Micro Processor
- Auto Calibration
- Adaptive Control Feature (continuously adjusts for load and actuator conditions and positions to ±0.1°)
- Dynamic Breaking
- 4-20mA, 1-5V, 0-5V, 0-10V
- Programmed to Fail in place, Fail CW, or Fail CCW on loss of command signal
- 4-20mA Feedback Transmitter (Optional)

EPC Electronic AS-i Network Card

- AS-i Version 2.1
- 120 VAC or 24VDC Power
- Emergency Override-Normal Operation is overridden when actuator is driven to either Ch or CCh position on command
- Built in Emergency Position Command (EPC) overrides normal operation and automatically operates the valve into either the open or closed position (normally this is the closed position) as defined in the user specifications
- Signal Sentinel continuously monitors the EPC system offering additional failsafe backup in the event of an unexpected local event

Boiler Feedwater Application

- Control signal 4-20mA, specify these parts: LRC-100, POT-102 & Extended Bracket.
- Control signal 0-135 ohm, specify these parts: TDC-100, XMA-108, POT-102 & Extended Bracket

Other Network Cards Available Upon Request

Special Application

Intelligent Digital Control Unit

- Light, compact and integral design
- Wide range of electric power application (AC 220V~AC480V/3 Phase)
- Built-in auto phase discriminator (easy and convenient wiring)
- Digital indicator with number, bar graph, menu and (3) LED lamps
- Separate terminal chamber (Reliable against water, vibration, temperature, etc.)
- Easy application for WE-Series Actuators
- Various options available

Semi-Integral Control Unit

- Light, compact and integrated design (IMS, Local/Remote control)
- Wide range of electric power application (AC 115V~AC480V/1 Phase or 3 Phase)
- Phase protection monitoring by LED in case of reverse wiring
- Easy application for WE-Series Actuators
- Various options available

LED lamp signal	
White	:Power
Blue	:Remote
Yellow	:Fault
Red	:Open/Opening
Green	:Close/Closing

Dimensional Drawing

WE/XE-690, 1350, 1700, 2640, 4400, 5200, 6900, 10500

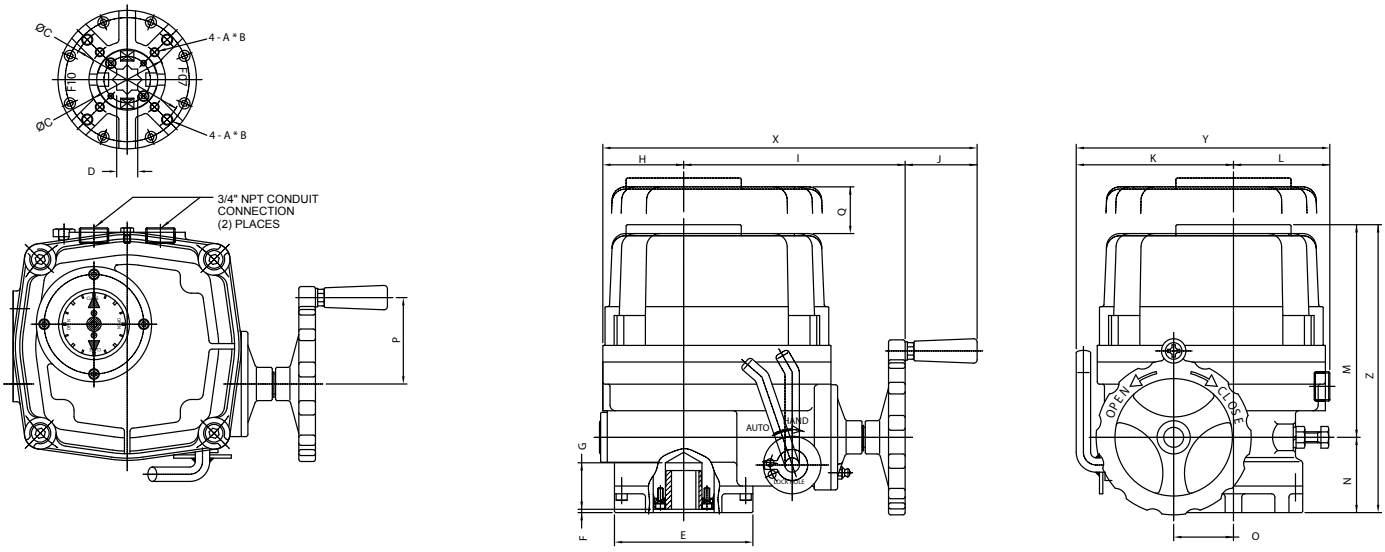

WE/XE-17500, 25900

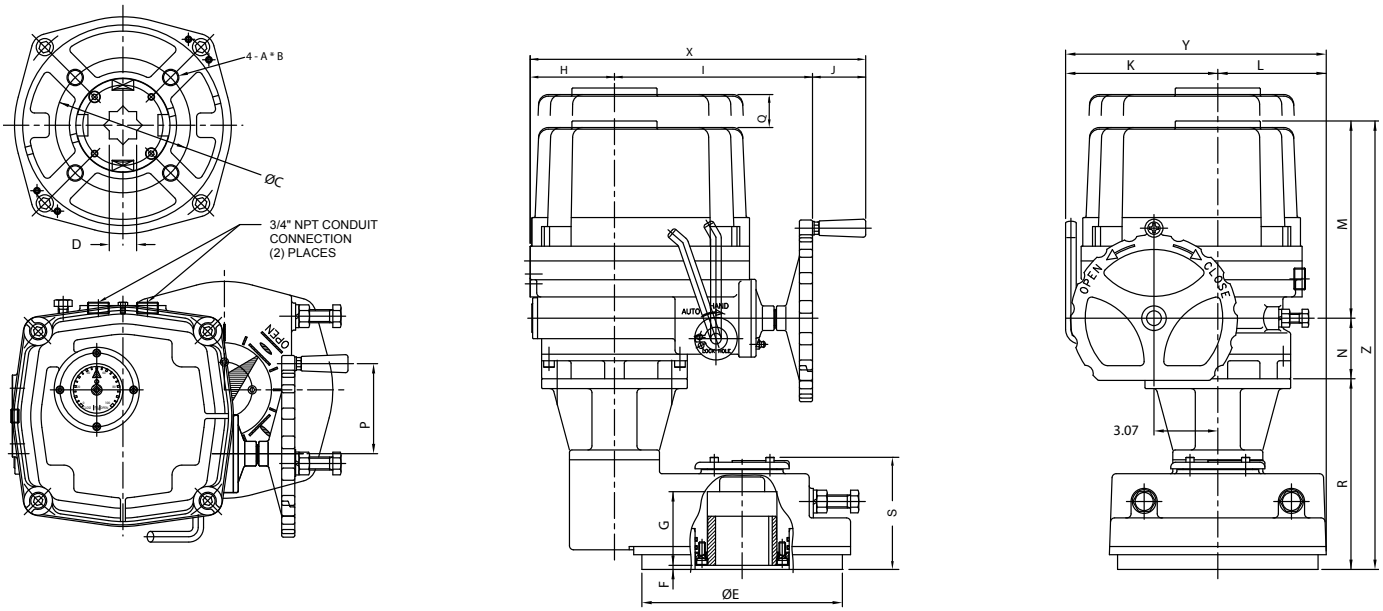

Dimensions

Units (inches)

Model WE/XE	ISO 5211	A	B	C	D sq	E	F	G	H	I	J	K	L	M	N	O	P	Q	R	S	X	Y	Z
-690	F07	M8	0.47	2.756	0.669	3.46	0.12	1.26	1.97	6.18	2.01	3.94	2.76	6.57	2.09	1.57	2.36	4.72	-	-	10.16	6.69	9.25
-1350	F07/F10	M8/M10	0.47/0.59	2.756/4.016	0.748	4.92	0.12	1.65	2.87	7.87	2.56	5.59	3.43	7.56	2.68	2.13	3.07	6.30	-	-	13.31	9.02	10.55
-1700	F07/F10	M8/M10	0.47/0.59	2.756/4.016	0.748	4.92	0.12	1.65	2.87	7.87	2.56	5.59	3.43	7.56	2.68	2.13	3.07	6.30	-	-	13.31	9.02	10.55
-2640	F10/F12	M10/M12	0.59/0.71	4.016/4.921	1.063	5.83	0.12	1.93	3.23	8.70	2.56	6.30	3.90	8.70	2.72	2.56	3.07	7.09	-	-	14.49	10.20	11.42
-4400	F10/F12	M10/M12	0.59/0.71	4.016/4.921	1.063	5.83	0.12	1.93	3.23	8.70	2.56	6.30	3.90	8.70	2.72	2.56	3.07	7.09	-	-	14.49	10.20	11.97
-5200	F10/F12	M10/M12	0.59/0.71	4.016/4.921	1.063	5.83	0.12	1.93	3.23	8.70	2.56	6.30	3.90	8.70	2.72	2.56	3.07	7.09	-	-	14.49	10.20	11.97
-6900	F14	M16	0.95	5.512	1.417	7.01	0.12	2.24	4.06	9.53	2.56	7.32	4.37	9.49	2.91	3.07	4.33	8.27	-	-	16.14	11.69	12.99
-10500	F14	M16	0.95	5.512	1.417	7.01	0.12	2.24	4.06	9.53	2.56	7.32	4.37	9.49	2.91	3.07	4.33	8.27	-	-	16.14	11.69	12.99
-17500	F16	M20	1.18	6.496	1.417	9.65	0.20	3.54	4.06	9.53	2.56	7.32	5.24	9.49	2.91	3.07	4.33	8.27	9.17	5.24	16.14	12.56	22.17
-25900	F16	M20	1.18	6.496	1.417	9.65	0.20	3.54	4.06	9.53	2.56	7.32	5.24	9.49	2.91	3.07	4.33	8.27	9.17	5.24	16.14	12.56	22.17

Dimensional Drawing

WE-1350, 1700, 2640, 4400, 5200, 6900, 10500 *Intelligent Digital Control Unit*

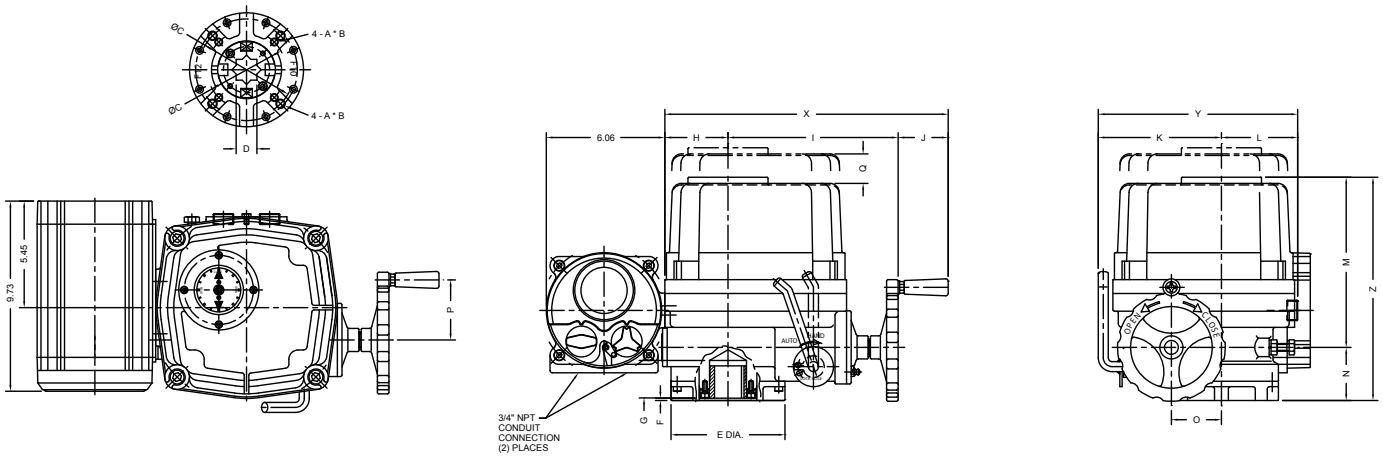

WE-17500, 25900 *Intelligent Digital Control Unit*

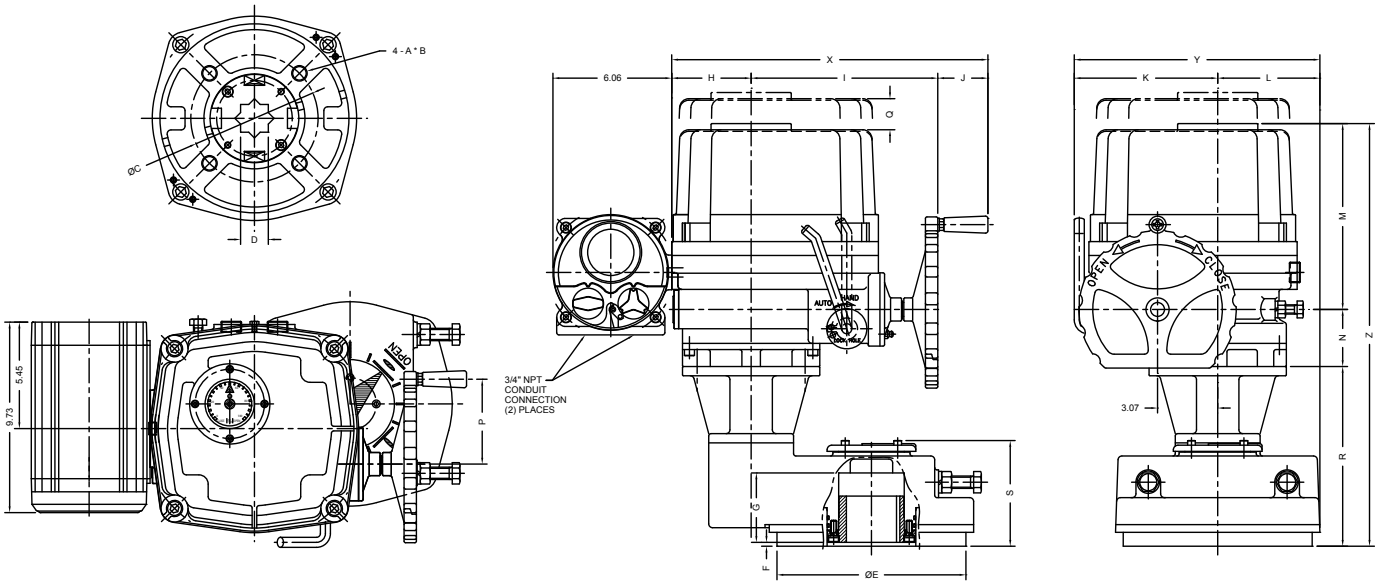

Dimensions

Units (inches)

Model WE	ISO 5211	A	B	C	D sq	E	F	G	H	I	J	K	L	M	N	O	P	Q	R	S	X	Y	Z
-1350	F07/F10	M8/M10	0.47/0.59	2.756/4.016	0.748	4.92	0.12	1.65	2.87	7.87	2.56	5.59	3.43	7.56	2.68	2.13	3.07	6.30	-	-	13.31	9.02	10.55
-1700	F07/F10	M8/M10	0.47/0.59	2.756/4.016	0.748	4.92	0.12	1.65	2.87	7.87	2.56	5.59	3.43	7.56	2.68	2.13	3.07	6.30	-	-	13.31	9.02	10.55
-2640	F10/F12	M10/M12	0.59/0.71	4.016/4.921	1.063	5.83	0.12	1.93	3.23	8.70	2.56	6.30	3.90	8.70	2.72	2.56	3.07	7.09	-	-	14.49	10.20	11.42
-4400	F10/F12	M10/M12	0.59/0.71	4.016/4.921	1.063	5.83	0.12	1.93	3.23	8.70	2.56	6.30	3.90	8.70	2.72	2.56	3.07	7.09	-	-	14.49	10.20	11.97
-5200	F10/F12	M10/M12	0.59/0.71	4.016/4.921	1.063	5.83	0.12	1.93	3.23	8.70	2.56	6.30	3.90	8.70	2.72	2.56	3.07	7.09	-	-	14.49	10.20	11.97
-6900	F14	M16	0.95	5.512	1.417	7.01	0.12	2.24	4.06	9.53	2.56	7.32	4.37	9.49	2.91	3.07	4.33	8.27	-	-	16.14	11.69	12.99
-10500	F14	M16	0.95	5.512	1.417	7.01	0.12	2.24	4.06	9.53	2.56	7.32	4.37	9.49	2.91	3.07	4.33	8.27	-	-	16.14	11.69	12.99
-17500	F16	M20	1.18	6.496	1.417	9.65	0.20	3.54	4.06	9.53	2.56	7.32	5.24	9.49	2.91	3.07	4.33	8.27	9.17	5.24	16.14	12.56	22.17
-25900	F16	M20	1.18	6.496	1.417	9.65	0.20	3.54	4.06	9.53	2.56	7.32	5.24	9.49	2.91	3.07	4.33	8.27	9.17	5.24	16.14	12.56	22.17

Dimensional Drawing

WE-1350, 1700, 2640, 4400, 5200, 6900, 10500 *Semi-integral Control Unit*

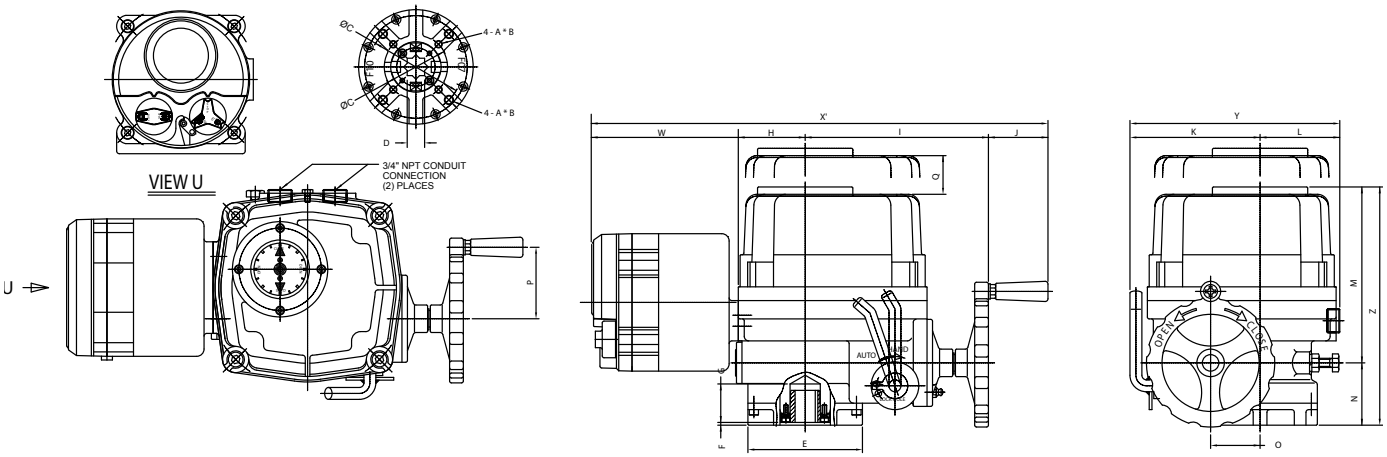

WE-17500, 25900 *Semi-integral Control Unit*

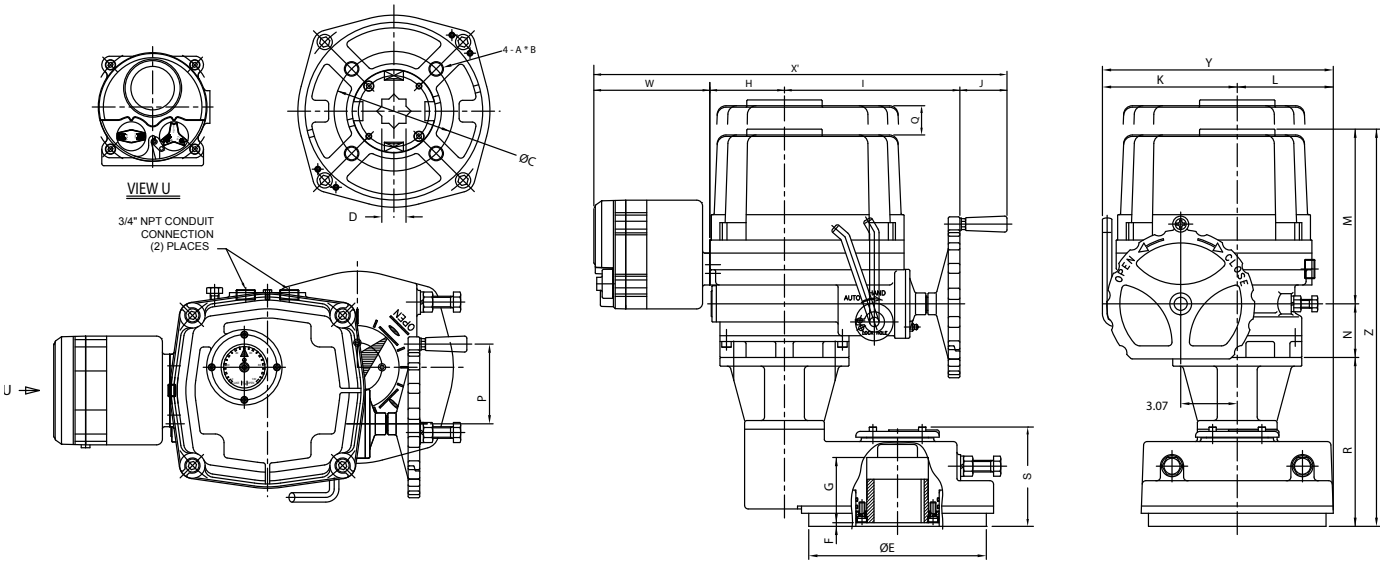

Dimensions

Units (inches)

Model WE	ISO 5211	A	B	C	D sq	E	F	G	H	I	J	K	L	M	N	O	P	Q	R	S	W	X	Y	Z
-1350	F07/F10	M8/M10	0.47/0.59	2.756/4.016	0.748	4.92	0.12	1.65	2.87	7.87	2.56	5.59	3.43	7.56	2.68	2.13	3.07	6.30	-	-	6.30	19.61	9.02	10.55
-1700	F07/F10	M8/M10	0.47/0.59	2.756/4.016	0.748	4.92	0.12	1.65	2.87	7.87	2.56	5.59	3.43	7.56	2.68	2.13	3.07	6.30	-	-	6.30	19.61	9.02	10.55
-2640	F10/F12	M10/M12	0.59/0.71	4.016/4.921	1.063	5.83	0.12	1.93	3.23	8.70	2.56	6.30	3.90	8.70	2.72	2.56	3.07	7.09	-	-	6.30	14.49	10.20	11.42
-4400	F10/F12	M10/M12	0.59/0.71	4.016/4.921	1.063	5.83	0.12	1.93	3.23	8.70	2.56	6.30	3.90	8.70	2.72	2.56	3.07	7.09	-	-	6.30	20.79	10.20	11.97
-5200	F10/F12	M10/M12	0.59/0.71	4.016/4.921	1.063	5.83	0.12	1.93	3.23	8.70	2.56	6.30	3.90	8.70	2.72	2.56	3.07	7.09	-	-	6.30	20.79	10.20	11.97
-6900	F14	M16	0.95	5.512	1.417	7.01	0.12	2.24	4.06	9.53	2.56	7.32	4.37	9.49	2.91	3.07	4.33	8.27	-	-	6.30	22.44	11.69	12.99
-10500	F14	M16	0.95	5.512	1.417	7.01	0.12	2.24	4.06	9.53	2.56	7.32	4.37	9.49	2.91	3.07	4.33	8.27	-	-	6.30	22.44	11.69	12.99
-17500	F16	M20	1.18	6.496	1.417	9.65	0.20	3.54	4.06	9.53	2.56	7.32	5.24	9.49	2.91	3.07	4.33	8.27	9.17	5.24	6.30	22.44	12.56	22.17
-25900	F16	M20	1.18	6.496	1.417	9.65	0.20	3.54	4.06	9.53	2.56	7.32	5.24	9.49	2.91	3.07	4.33	8.27	9.17	5.24	6.30	22.44	12.56	22.17

Wiring drawings are available upon request.

Wiring Connection

WE/XE-1350 thru 25900 *Two Position 115 VAC/1 Ph* SE 1080

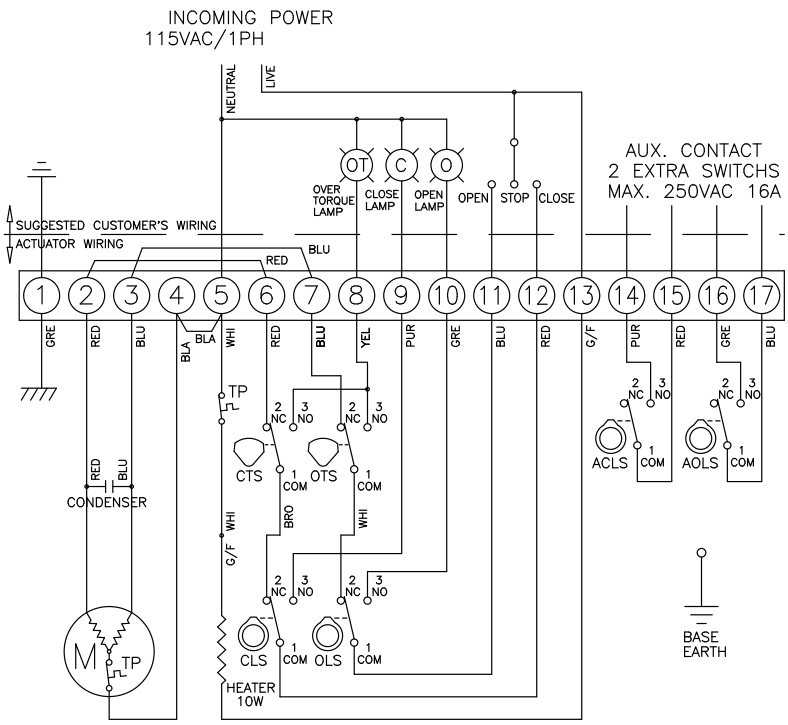

TORQUE AND LIMIT SWITCH OPERATION		
SWITCH	CLOSE ◄— INTERMEDIATE	—► OPEN
CLS 1–2		
CLS 1–3		
OLS 1–2		
OLS 1–3		
ACLS 1–2		
ACLS 1–3		
AOLS 1–2		
AOLS 1–3		
CTS 1–3	* CLOSING TORQUE SWITCH INTERRUPTS CONTROL IF MECHANICAL OVERLOAD OCCURS DURING CLOSING CYCLE	
OTS 1–3	* OPENING TORQUE SWITCH INTERRUPTS CONTROL IF MECHANICAL OVERLOAD OCCURS DURING OPENING CYCLE	

SYMBOL	DESCRIPTION	RATING
CLS	CLOSE LIMIT SWITCH	250VAC 10A
OLS	OPEN LIMIT SWITCH	250VAC 10A
CTS	CLOSE TORQUE SWITCH	250VAC 10A
OTS	OPEN TORQUE SWITCH	250VAC 10A
ACLS	AUX. CLOSE LIMIT SWITCH	250VAC 16A
AOLS	AUX. OPEN LIMIT SWITCH	250VAC 16A
TP	THERMAL PROTECTOR	250VAC 15A

*EACH ACTUATOR SHOULD BE POWERED THROUGH IT'S OWN INDIVIDUAL SWITCH OR RELAY CONTACTS TO PREVENT CROSS FEED BETWEEN TWO OR MORE ACTUATORS.

WEM/XEM-1350 thru 25900 *Proportional 115 VAC/1 Ph* SE 1052

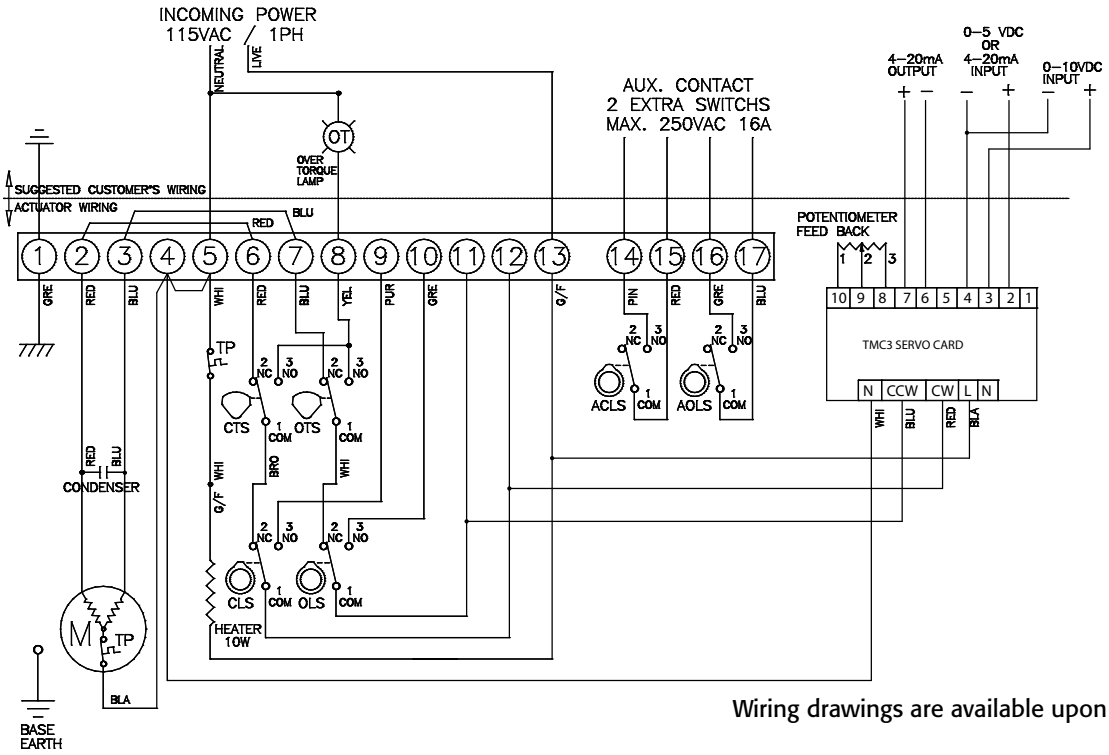

Wiring drawings are available upon request.

Wiring Connection

Digital Control Unit *3 Phase/Proportional* SE 1222

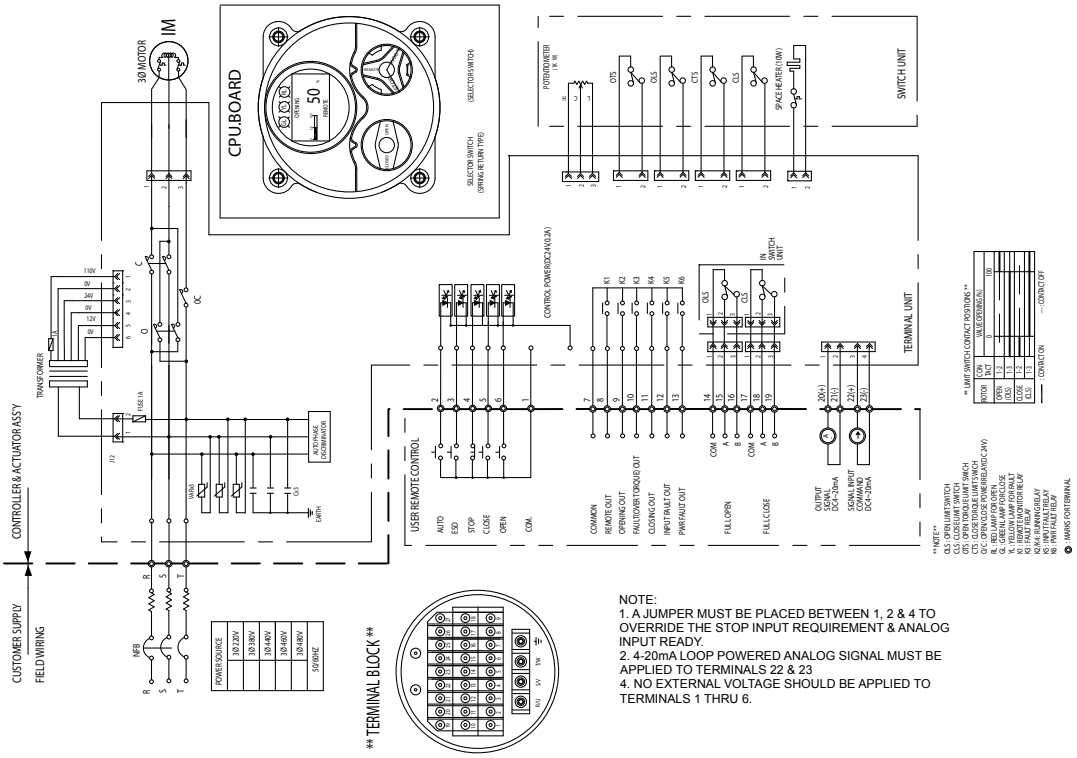

Digital Control Unit *3 Phase/2 Position* SE 1301

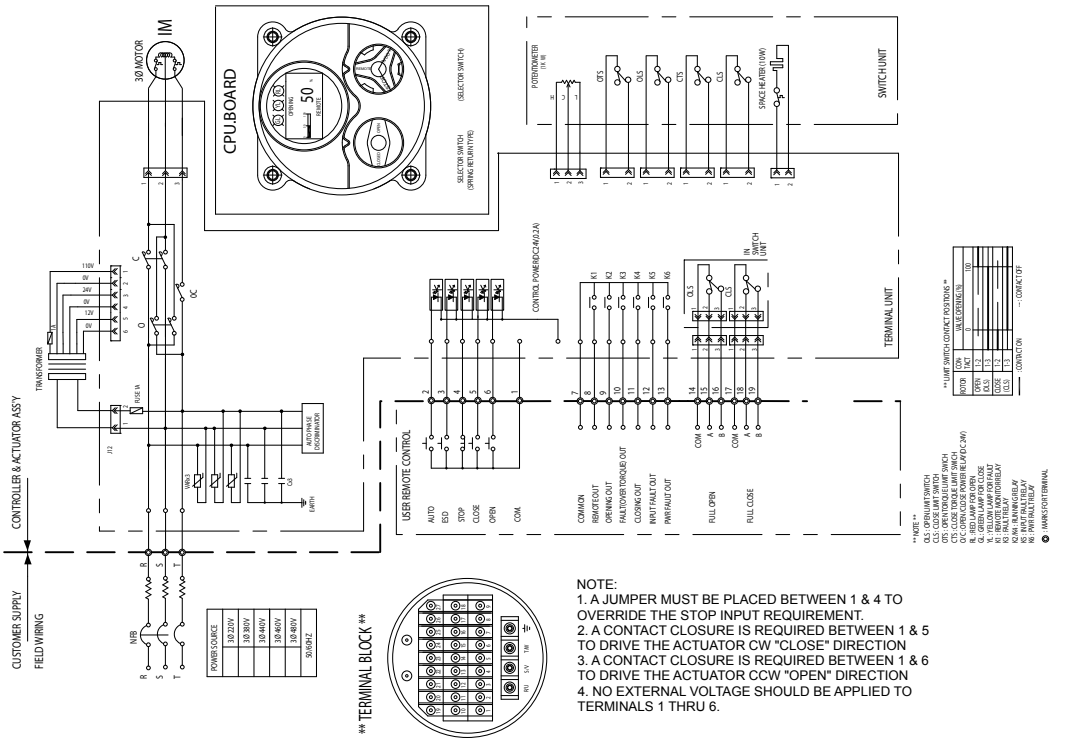

Wiring Connection

Semi-integral Unit 1 Phase/Proportional SE 1176

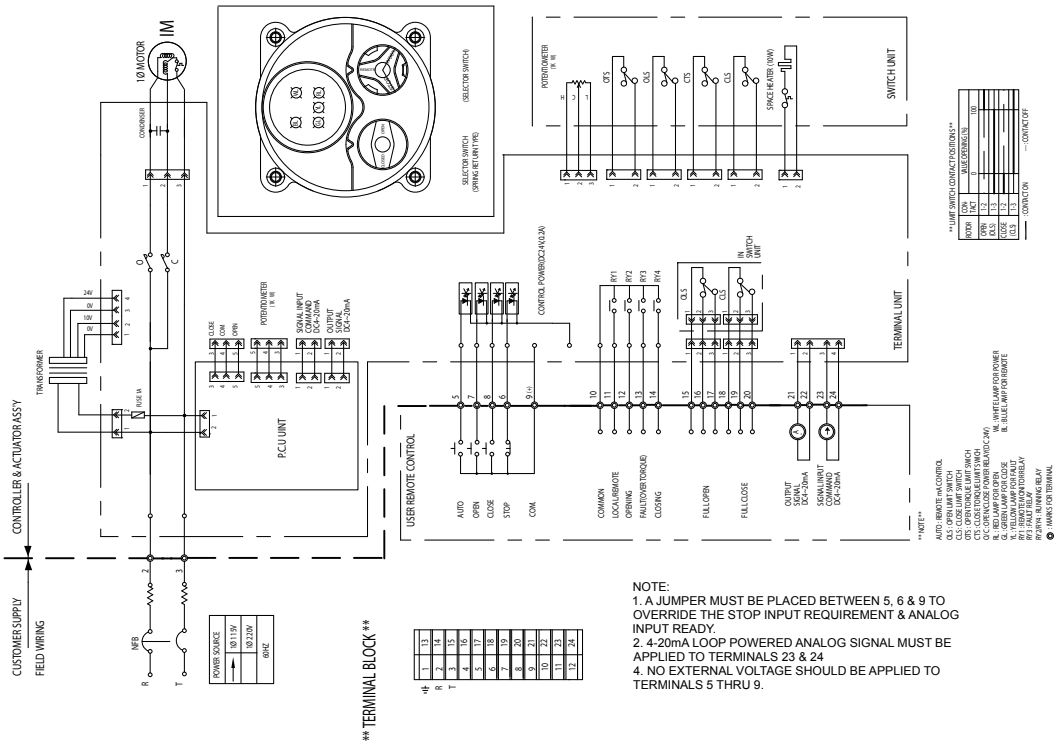

Semi-integral Unit 1 Phase/2 Position SE 1097

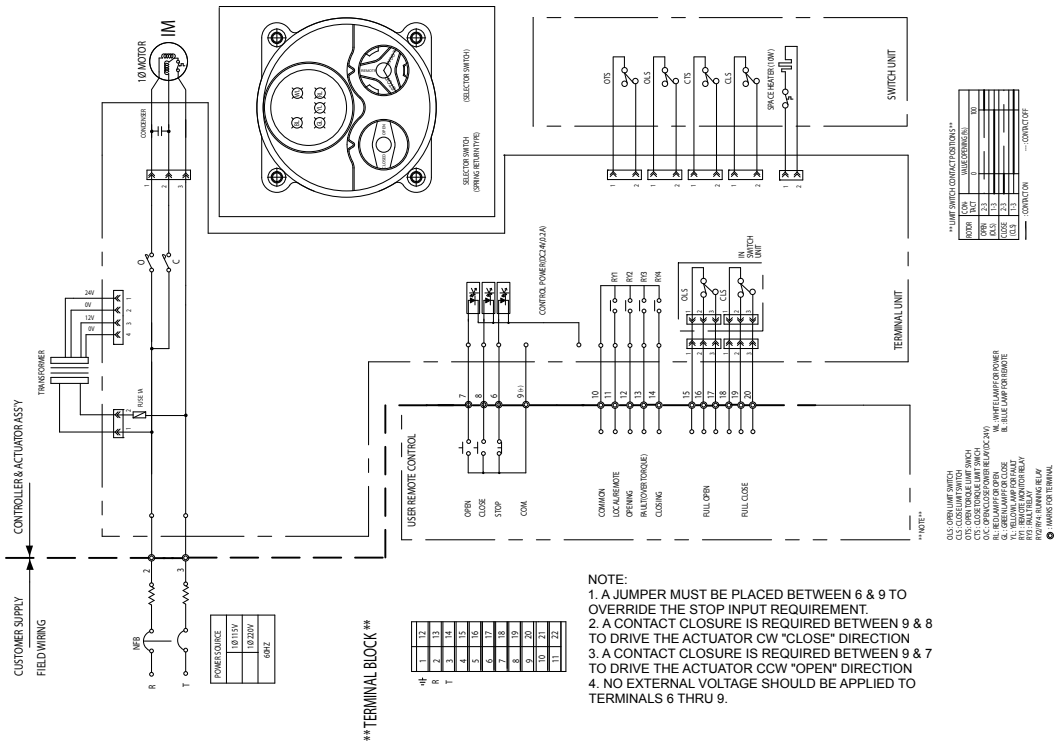

WE-53000 and WE-80000

Features

- Compact, robust and lightweight construction covers a wide range of torques up to 80000 In-lbs.
- Polyester powder coated exterior and hard anodized aluminum interior provides excellent protection from the most severe industrial environments.
- Double worm gear design prevents any valve movement from dynamic forces within the pipeline.
- Standard ISO 5211 mounting configuration provides direct mounting option to any ISO 5211 valve.
- Weatherproof enclosure with O-ring seal provides NEMA 4, 4X and 6 (IP67) protection.
- Declutchable manual override with hand wheel.
- Mechanical torque switches prevent motor and gear set damage during excessive torque scenarios.
- Large visual indicator allows for positive visual position indentification from greater distances.
- Digitized control components.

Standard Construction

- Manual override
- External Mechanical Stopper
- Two Conduit entries PF 3/4"
- Removable drive bushing and ISO5211 mounting base
- Standard four limit switches. Two for each travel end (open/close)
- Captive cover bolt
- Space heater
- Limit switches for tight, easy setting
- Spring loaded push type terminal
- Standard color : Red

Technical Information

Type (Model)	Maximum Output Torque	Operating Time 60/50 Hz	Mounting Size	Motor Insulation Class	Rated Current(A) 60Hz			Duty Cycle	Number of Handle Turns	Weight	Maximum Bore Size (mm)	
				AC 1PH. 50/60Hz	1 Phase	3 Phase	3 Phase					
	In-Lbs.	90°	ISO5211		220V	380V	440V	S2		Lbs.	Key (ø)	Square (¤)
WE-53000 WE-80000	53000 80000	149 sec.	F25/30	F	3.15 3.85	1.8 2.0	2.2 2.4	30%	39	335	120	100

Standard Specification

Enclosure..... Weatherproof enclosure IP67, NEMA 4, 4X & 6, O-ring Sealed
Power Supply..... 220VAC/1PH/60Hz, 380/440/ VAC/3Ph/60Hz ± 10%, 24VDC
Duty cycle..... 30%
Motor..... Squirrel Cage induction motor
Limit switches..... 2 each for Open/Close, SPDT, 250 VAC, 10A Rating
Torque switches..... 1 each for Open/Close, SPDT, 250 VAC, 10A Rating
Space heater..... 5W (220VAC) Anti-condensation
Manual override..... Declutchable
Cable conduit..... Two PF 3/4" TAP
Movement angle..... 90° ± 5°
Ambient temperature..... -4°F to 158°F (optional -40° Low Temp Kit)
Ambient Humidity..... 90% RH Max (Non-Condensing)
Position Indicator..... Continuous mechanical indicator with arrow
Self locking..... Provided by double worm gearing (no brake)
Mechanical Stopper..... 1 for each travel end (open/close), external & adjustable
Stall protection/set temp..... Built in thermal protection, Open 302°F (150°C) / Close 207°F (97°C)
Terminal Block..... Spring loaded lever push type
External coating..... Polyester powder coating
Lubrication..... EP type grease
Anti Vibration..... XYZ 10g, 0.2-34Hz, 30 minutes

Dimensions

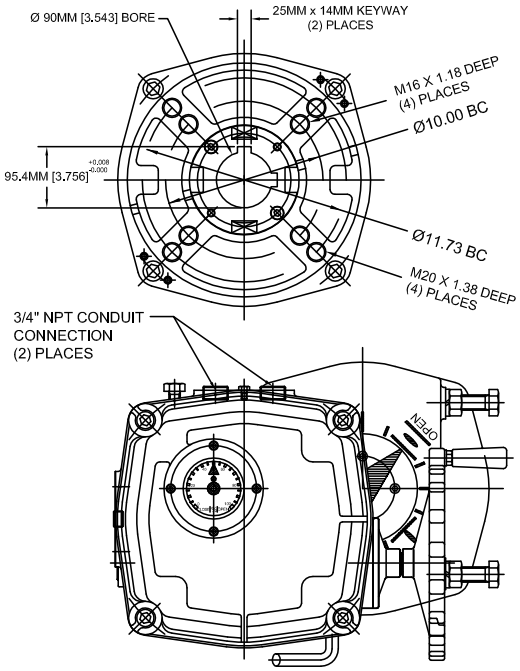

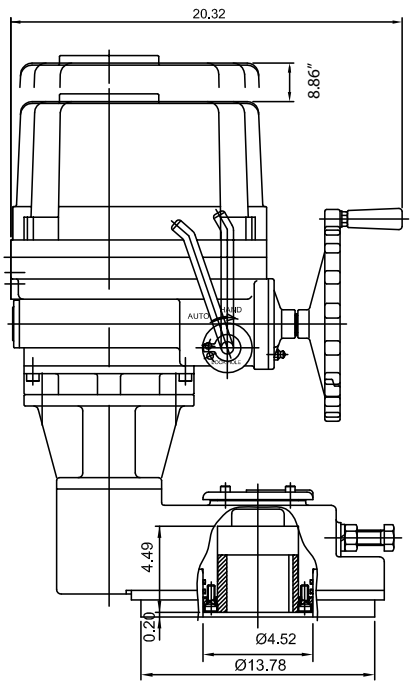

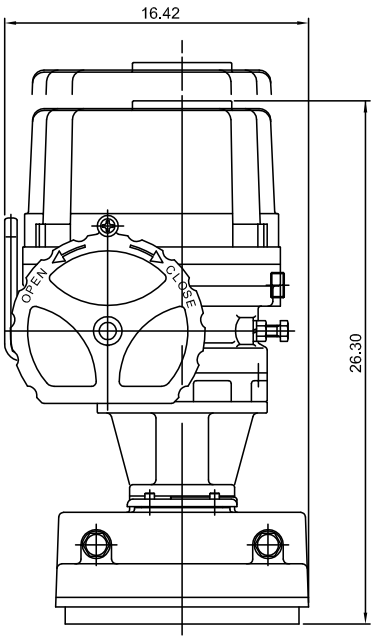

TRIAC CONTROLS

Triac WE / XE Series Part Number Reference

Model	
WE	Weather Proof, IP67, TYPE 4, 4X, 6
XE	Explosion Proof Design, ATEX & IECEx Ex d IIB T4, IP67
FE	Fire Proof Unit (1050ºF for 50 Min)
SE	Submersible unit (IP68, 10 meters for 72 Hours)

Control	
Blank	(2) Position Control (Open / Close)
M	Standard Modulating Control Card (TMC3)
D	TDC-100 Modulating Card (Provides 450 points of resolution)
P	Profibus DP
R	Modbus (RS485)
L	Boiler Feed (4-20mA)
S	Boiler Feed (0-135ohm)

Actuator	
Size	
-350	350 In-Lbs
-350HS	270 In-Lbs
-500	500 In-Lbs
-690	690 In-Lbs
-1350	1350 In-Lbs
-1700	1700 In-Lbs
-2640	2640 In-Lbs
-4400	4400 In-Lbs
-5200	5200 In-Lbs
-6900	6900 In-Lbs
-10500	10500 In-Lbs
-17500	17500 In-Lbs
-25900	25900 In-Lbs
-53000	53000 In-Lbs
-80000	80000 In-Lbs

Motor		
X	115VAC/1PH	Place holder only - Omit when at end of part number
A	24V AC/DC	(N/A 4400 - 25900)
B	12VDC	
C	24VDC*	(N/A 4400 - 25900)
	*Requires additional relays for customer supplied wiring	
D	24VAC/1PH	(N/A 4400 - 25900)
E	220VAC/1PH	
F	220VAC/3PH	(N/A 500, 690)
G	380VAC/3PH	(N/A 500, 690)
H	440VAC/3PH	(N/A 500, 690)
J	460VAC/3PH	(N/A 500, 690)
K	480VAC/3PH	(N/A 500, 690)

Options		
X	No options	Place holder only - Omit when at end of part number
2	ADM-100 Control Board - 24 VDC On/Off	
B	Semi-integral Control Unit	(N/A 500, 690)
C	Intelligent Digital Control Unit	(N/A 500, 690)
D	Local / Remote Control Switches	(Only 500, 690)
E	Electronic Speed Control Module - 115 VAC only	
F	2 Wire Control & Speed Control - 115 VAC only	
G	End of travel time delay (same in both directions)	
HS1/HS2	See High Speed Options	
R	2 Wire Control, Relay - 115 VAC control voltage	
S	2 Wire Control, Relay - 24 VAC control voltage	
T	2 Wire Control, Relay - 24 VDC control voltage	

Miscellaneous Options Note: Add all miscellaneous options to end of part number		
Blank	No options	
T	4-20mA Transmitter	
N	1000 Ohm Potentiometer	
O	5000 Ohm Potentiometer	
P	10K Ohm Potentiometer	
X	120º Operation	(N/A 17500 or 25900)
Y	180º Operation	(N/A 17500 or 25900)
Z	270º Operation	(N/A 17500 or 25900)
L	-40º Low Temp Kit	
I	Position Indicator Lamps (Open, Close, Torque)	(N/A 500, 690)
S	(2) additional limit switches (6 total)	(N/A 500, 690)
	Floor Drive Mounting Configuration - See Floor Drive Catalog	

Examples

WEM-1350
(Weather Proof Housing, Modulating Control, model size 1350, 115VAC / 1PH)

WEM-1350XXT
(Weather Proof Housing, Modulating Control, model size 1350, 115VAC / 1PH, 4-20mA Transmitter)

AT Controls reserves the right to change product designs and technical/dimensional specifications without notice.

A-T Controls, Inc.

9955 International Blvd.
Cincinnati, Ohio 45246
www.atcontrols.com

PHONE (513) 247-5465
FAX (513) 247-5462
sales@atcontrols.com

WE-20150508
Copyright 2013 A-T Controls, Inc.
LIT0021

12" Model 581 KC
3" Model 581 KC

Series 581

Silent Globe Check Valve

FM APPROVED

- **Operates Horizontally or Vertically**
- **Watertight Seating**
- **Field Replaceable Parts**
- **Factory Mutual Approved – Various Sizes**
- **Optional Resilient Seat**

The Cla-Val Series 581 Silent Globe Check Valve has a spring-loaded poppet that allows the valve to close before flow reversal occurs, resulting in a silent, non-slam closure. It is a truly silent check valve. For ease of installation, the valve can be installed in vertical or horizontal positions with flow up or flow down. Silent Globe Check Valves are available in 2 1/2" to 42" sizes, with either a 125 lb. or 250 lb. pressure class rating. Silent Globe Check Valves shall be coated with NSF fusion bonded epoxy coating on valve interior and exterior.

Constructed of a cast iron body with bronze trim, the Cla-Val Silent Globe Check Valve offers watertight shutoff with metal-to-metal seating. ~~For special applications, stainless steel trim and Buna-N® resilient seats are available as options~~. All materials conform to ASTM specifications, ensuring long lasting reliable performance. As a confirmation of Cla-Val's commitment to quality, 2 1/2" to 12" 125 lb. class Series 581 valves are Factory Mutual approved.

SPECIFICATIONS

The silent globe check valve shall consist of a heavy cast iron body, bronze seat, bronze disc, and stainless steel spring. The valve disc shall be center guided at both ends with an integral shaft and shall be spring loaded for silent operation. The spring shall be helical or conical and stone tumbled to achieve a micro-finish to resist mineral deposits. For ease of maintenance, the seat and disc shall be replaceable in the field.

Check valve shall be capable of silent operation when installed in vertical or horizontal positions with either flow up or flow down. The flow area through the body shall be equal to or greater than the cross-section area of the equivalent pipe size. Sizes 2 1/2" to 10" shall allow bolting a wafer style butterfly valve directly to the outlet flange without a spool piece.

All materials of construction shall conform to ASTM specifications as follows:

***Valve Body:** Cast Iron ASTM A126 Class B

Disc & Seat: Bronze ASTM B584

Spring: Stainless Steel ASTM A313.5
Stone Tumbled & Stress Relieved.

Sizes: 3" thru 10" shall accept a direct connected Butterfly Valve for isolation use and space saving in the pump station.

The valve shall be a Cla-Val Series 581 Silent Globe Check Valve.

~~**Note:** Cla-Val Series 581 Silent Globe Check Valve available in all 316 Stainless Steel Material.~~

Series 581 Pressure Loss Curve
(Typical)

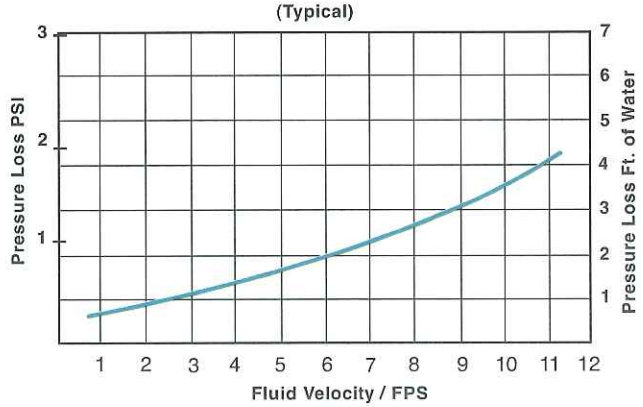

PRESSURE / TEMPERATURE RATINGS
WAFER AND GLOBE STYLE SILENT CHECK VALVES

TEMP DEG F.	MAXIMUM NON-SHOCK WATER SERVICE PRESSURE							
	GRAY IRON 125 LB. CLASS		~~DUCTILE IRON 150 LB. CLASS~~		GRAY IRON 250 LB. CLASS		~~DUCTILE IRON 300 LB. CLASS~~	
	2" - 12"	~~14" - 42"~~	2" - 12"	~~14" - 42"~~	2" - 12"	~~14" - 42"~~	~~2" - 12"~~	~~14" - 42"~~
0 -150°	200	~~150~~	300	250	~~400~~	~~300~~	~~500~~	400
200°	190	~~135~~	280	230	370	~~280~~	460	370
250°	*	~~*~~	270	220	~~*~~	~~*~~	440	355
TEST PRES.	300	~~230~~	450	~~375~~	600	450	750	~~600~~

* Ductile Iron Recommended For Hot Water Service Above 200° F.

ncs
10/4/15

FM
* APPROVED

Silent Globe Check Valve
SERIES 581

*CHECK 12" QTY'S
VAULT "C" IS NOT OWNER
INSTALLED.
-PI- 00-000005
~~-CV-00-000022~~
-CV-00-000022

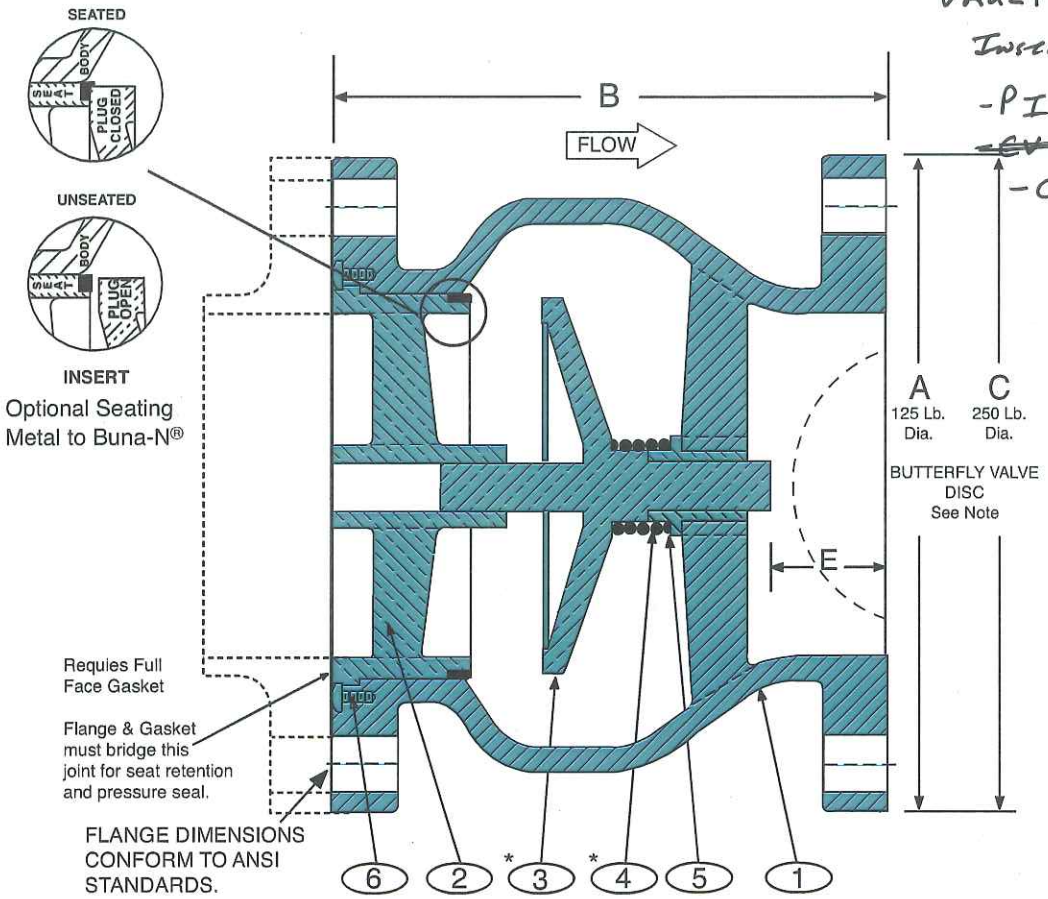

Note: Plug 3 & spring 4 compressed are shown in Open Position.

Dimensions (In Inches)

ANSI CLASS 125 and 250							
Model	Size	Weight Lbs		A 125 Dia.	B	C 250 Dia.	E
		125	250				
581	2 1/2	24	30	7	5 1/2	7 1/2	1
581	3*	29	36	7 1/2	6	8 1/4	1 3/8
581	4*	42	59	9	7 1/4	10	1 3/4
581	5*	52	78	10	8 1/2	11	2
581	6*	73	103	11	9 3/4	12 1/2	2 1/2
581	8*	126	179	13 1/2	12 1/2	15	3 1/4
581	10*	205	253	16	15 1/2	17 1/2	4 1/4
* 581	12*	306	401	19	14 1/4	20 1/2	
581	14	380	511	21	15 3/4	23	Spool
581	16	501	697	23 1/2	17 5/8	29 1/2	
581	18	724	959	25	18 3/4	28	Piece
581	20	890	1180	27 1/2	20 5/8	30 1/2	
581	24	1220	1680	32	24	36	is
581	30	2000	2375	38 3/4	29 1/4	43	
581	36	4421	5511	46	45	50	Needed
581	42	7203	8663	53	50	57	

* FM Approved

Detail No.	Name	Material Description
1	Body	Cast Iron ASTM A126, Class B
2	Seat	Bronze ASTM B584**
3	Plug	Bronze ASTM B584
4	Spring	Stainless Steel T302 ASTM A313.5
5	Bushing	Bronze ASTM B584
6	Screw	Stainless Steel T316 ASTM A276

**~~Optional Resilient Seat Available However Valve is not FM Approved~~

Temp. Rating	MAXIMUM SERVICE PRESSURE ANSI BI6.1 FLG. RATINGS			
	125 LB. CLASS		250 LB. CLASS	
	2" - 12"	14" - 42"	2" - 12"	14" - 42"
0-150° F	200	150	400	300
200° F	190	135	370	280
Test Pressure	300	230	600	450

NOTE: Butterfly Valve Disc sizes 3" to 10" designed to allow bolting a wafer style butterfly valve directly to the outlet flange without a spool piece.

©Copyright Cla-Val 2011 Printed in USA Specifications subject to change without notice.

Technical Bulletin

EPOXY PROTECTIVE COATING

Epoxy resin powders were created and developed specifically for the application of thin film corrosion protection to metal or other substrates. Epoxy resin coatings are suitable for continuous exposure to a wide range of corrosive elements. Of particular interest for control valves is the high resistance to various water conditions. They also provide resistance to certain acids, chemicals, solvents and alkalis. They have excellent adhesion to almost any prepared surface. They are sufficiently flexible to be used to protect steel springs from corrosion and have an impact strength that allows retainability and restoration of surface coating under normal drop conditions.

Since the early 1970's the application process used by Cla-Val is the fusion method. This method of applying epoxy resins utilizes the principal of covering a suitably cleaned and preheated part with a one-part dry powdered resin. The dry powdered resin fuses itself to the heated part. A curing period in an oven at 400 degrees F completes the process. No volatile solvents are required and thus there are no pinholes left by evaporation of such materials. The coating is applied by electrostatic spray or flock spray to a nominal thickness recommended by the coating manufacturer.

Cla-Val valves specified with epoxy coating applied at the factory fully conform to the standards below. Applied to the inside and outside of all ferrous parts, this coating option is indicated with "KC" as a suffix to the valve catalog number.

CERTIFICATION

This is to confirm that Cla-Val uses AKZO Nobel R4-HJF42R (Blue) epoxy powder coating material for our factory applied protective coating. Our coating application process conforms to all applicable requirements of the American Water Works Association Standard C550 entitled “Protective Interior Coatings for Valves and Hydrants."

The AKZO Nobel R4-HJF42R (Blue) epoxy powder coating material is certified as a protective barrier material and approved by NSF Standard 61 - Drinking Water System Components - Health Effects (Nov. 16, 1995).

The AKZO Nobel R4-HJF42R (Blue) epoxy powder coating material is formulated with ingredients which are listed in or cited by the suppliers as in compliance with Federal Drug Administration Document, Title 21 of the Federal Regulations on Food Additives, Section 175.300, "Resinous and Polymeric Coatings."

CLA-VAL
AUTOMATIC CONTROL VALVES

581

Place this manual with personal responsible for maintenance of this valve

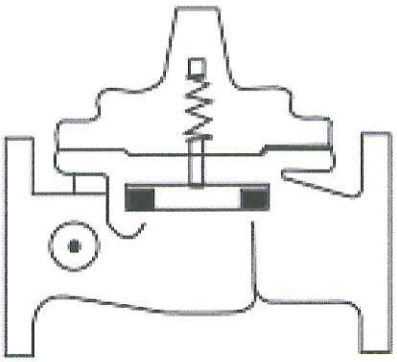

INSTALLATION

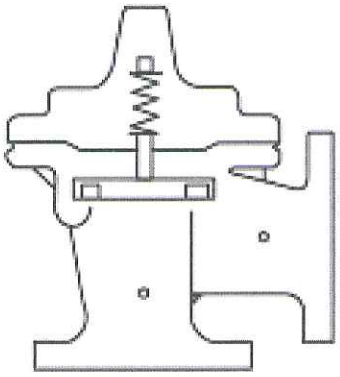

OPERATION

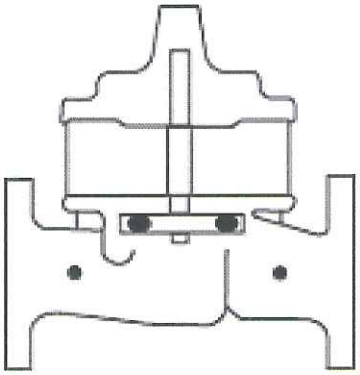

MAINTENANCE

CLA-VAL ¥ P.O. BOX 1325 ¥ NEWPORT, CA 92659-0325 ¥ (949) 722-4800 ¥ FAX: (949) 548-5441
CLA-VAL CANADA LTD. ¥ 4687 Christie Drive ¥ Beamsville, Ontario, LOR 1B4 Canada ¥ (905) 563-4963

CLA-VAL

— SERIES — 580 & 581

SILENT CHECK VALVES

OPERATION:

Cla-Val Silent Check Valves operate automatically, to open... when pump flow starts and close silently ...when pump flow stops.

INSTALLATION:

Silent Check Valves, Wafer and Globe style must be installed between flat faced iron or steel flanges per ANSI B16.5 or Awwa 207, utilizing a full faced gasket to bridge the joint between the seat O.D. (2) and the body (1) flange face. In this manner a pressure seal at this joint is made (see **Note 1**). Install the valve so that the nameplate data is plainly read and the flow arrow points in the flow direction.

MAINTENANCE:

Cla-Val Silent Check Valves are ruggedly designed for years of trouble-free service. Therefore, regular maintenance is not required. However, during initial start-up period the following problems may surface (due to mis-application) that can be easily resolved:

A. No Flow thru Valve:
1. Observe that the flow arrow name plate, on the valve body, is pointing in the direction of flow.
2. Check that the down stream shut-off valve is full open.

B. Valve Chatters:
1. Confirm that the flow velocity is a minimum 3'/Sec.
2. Check that there is a minimum of 3 diameters of straight pipe installed up stream of the silent check valve.

C. Valve Leakage:
1. Confirm a full face gasket is installed per Note 1.

Series 581
Globe Style
Check Valve
2" thru 42"

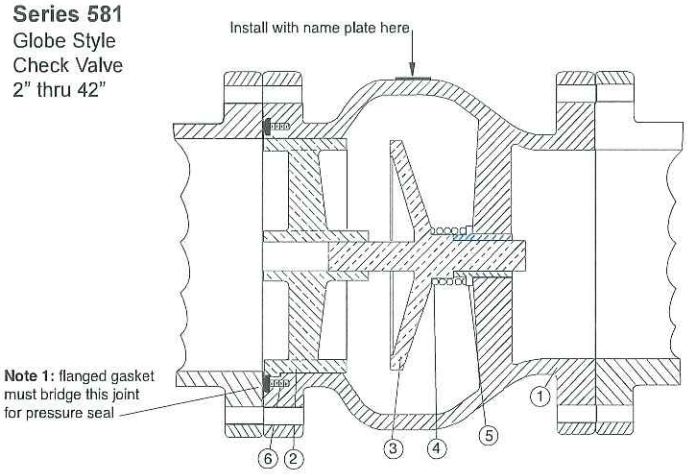

Detail	Description	Material
1	Body	Cast Iron
2	Seat*	Bronze or SS
3	Disc*	Bronze or SS (Optional Buna-N®)
4	Spring*	Stainless Steel
5	Bushing*	Bronze
6	Screw*	Stainless Steel (3" & larger valves)

Note 2: All size 2" and 2 1/2" valves have threaded seats in liev of screws

* Recommended Spare Part Kit

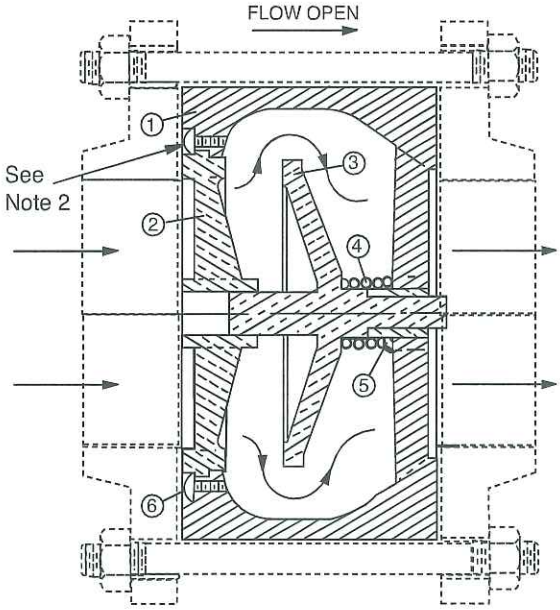

SERIES 580
WAFER STYLE CHECK VALVE
2" THRU 10"

TO REMOVE VALVE FROM PIPELINE FOR INSPECTION:

1. Shut off pump and pressure upstream and shut off isolation valve downstream to completely isolate check valve. A skilled pipe fitter should be used for this work.
2. Lay valve to rest on its downstream side and remove cap screws as shown in Fig. 3. **Note** that 2" and 2-1/2" valves threaded seats in lieu of cap screws.
3. Grip seat spokes by hand to pull out seats or push down the disc and release quickly to allow force of the spring to pop out the seat.
4. With seat removed, check that all internal parts are freely removable from valve body.
5. Examine all parts for wear/damage and order replacement PARTS KITS as shown below.

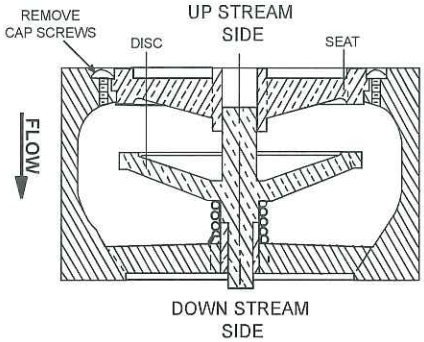

FIG. 3

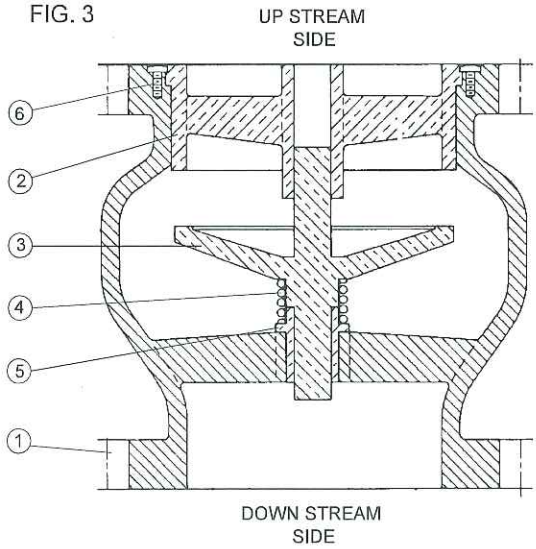

Detail	Description	Material
1	Body	Cast Iron
2	Seat*	Bronze or SS
3	Disc*	Bronze or SS (Optional Buna-N®)
4	Spring*	Stainless Steel
5	Bushing*	Bronze
6	Screw*	Stainless Steel (3" & larger valves)

Note 2: All size 2" and 2 1/2" valves have threaded seats in liev of screws

* Recommended Spare Part Kit

Silent Check Valve Spare Part Kits

Series 580 Wafer Style		
Model	Size	Kits
580	2"	A B C D
580	2 1/2"	A B C D
580	3"	A B C D
580	4"	A B C D
580	5"	A B C D
580	6"	A B C D
580	8"	A B C D
580	10"	A B C D

Series 581 Globe Style		
Model	Size	Kits
581	2"	A B C D
581	2 1/2"	A B C D
581	3"	A B C D
581	4"	A B C D
581	5"	A B C D
581	6"	A B C D
581	8"	A B C D
581	10"	A B C D
581	12"	A B C D
581	14"	A B C D

A- Kit Includes Detail 2 Bronze Seat & Detail 3 Disc
B- Kit Includes Detail 2 Stainless Steel Seat & Detail 3 Disc
C- Kit Includes Detail 2 Stainless Steel Seat, Detail 3 Disc, Detail 4 Spring, & Detail 5 Bronze Bushing
D- Kit Includes Detail 2 Stainless Steel Seat, Detail 3 Disc, Detail 4 Spring, & Detail 5 Stainless Steel Bushing

©copyright Cla-Val 2001 Printed in USA Specification subject to change without notice.

Cla-Val Product Identification

How to Order

Proper Identification

For ordering repair kits, replacement parts, or for inquiries concerning valve operation it is important to properly identify Cla-Val products already in service. Include all nameplate data with your inquiry. Pertinent product data includes valve function, size, material, pressure rating, end details, type of pilot controls used and control adjustment ranges.

Identification Plates

For product identification, cast in body markings are supplemented by identification plates as illustrated on this page. The plates, depending on type and size of product, are mounted in the most practical position. **It is extremely important that these identification plates are not painted over, removed, or in any other way rendered illegible.**

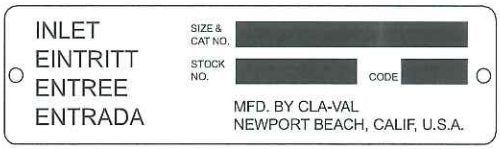

This brass plate appears on valves sized $2^1/_2$" and larger and is located on the top of the inlet flange.

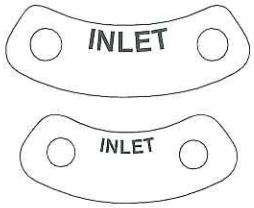

These two brass plates appear on $^3/_8$", $^1/_2$", and $^3/_4$" size valves and are located on the valve cover.

This brass plate appears on altitude valves only and is found on top of the outlet flange.

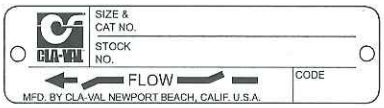

These two brass plates appear on 1" through 3" size screwed valves or 1" through 2" flanged valves . It is located on only one side of the valve body.

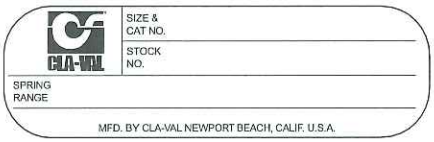

This tag is affixed to the cover of the pilot control valve. The adjustment range appears in the spring range section.

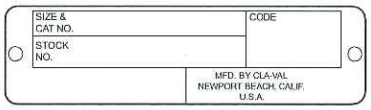

This brass plate is used to identify pilot control valves. The adjustment range is stamped into the plate.

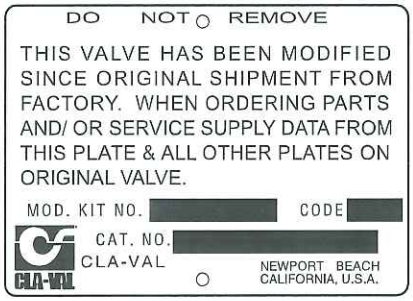

This aluminum plate is included in pilot system modification kits and is to be wired to the new pilot control system after installation.

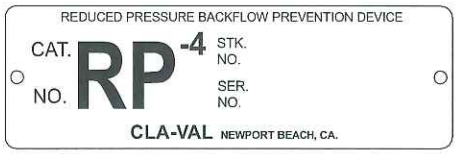

This brass plate is on our backflow prevention assemblies. It is located on the side of the number two check (2" through 10"). The serial number of the assembly is also stamped on the top of the inlet flange of the number one check.

HOW TO ORDER

There are many valves and controls manufactured by Cla-Val that are not listed due to the sheer volume. For information not listed, please contact your local Cla-Val office or our factory office located at:

P. O. Box 1325
Newport Beach, California 92659-0325
(949) 722-4800
FAX (949) 548-5441

SPECIFY WHEN ORDERING

- Model Number
- Globe or Angle Pattern
- Adjustment Range (As Applicable)
- Valve Size
- Screwed or Flanged
- Body and Trim Materials
- Optional Features
- Pressure Class

UNLESS OTHERWISE SPECIFIED

- Globe or angle pattern are the same price
- Ductile iron body and bronze trim are standard
- X46 Flow Clean Strainer or X43 "Y" Strainer are included
- CK2 Isolation Valves are included in price on 4" and larger valve sizes (6" and larger on 600 Series)

LIMITED WARRANTY

Automatic valves and controls as manufactured by Cla-Val are warranted for three years from date of shipment against manufacturing defects in material and workmanship which develop in the service for which they are designed, provided the products are installed and used in accordance with all applicable instructions and limitations issued by Cla-Val.

We will repair or replace defective material, free of charge, which is returned to our factory, transportation charges prepaid, provided that, after inspection, the material is found to have been defective at time of shipment. This warranty is expressly conditioned on the purchaser's giving Cla-Val immediate written notice upon discovery of the defect.

Components used by Cla-Val but manufactured by others, are warranted only to the extent of that manufacturer's guarantee.

This warranty shall not apply if the product has been altered or repaired by others, and Cla-Val shall make no allowance or credit for such repairs or alterations unless authorized in writing by Cla-Val.

DISCLAIMER OF WARRANTIES AND LIMITATIONS OF LIABILITY

The foregoing warranty is exclusive and in lieu of all other warranties and representations, whether expressed, implied, oral or written, including but not limited to any implied warranties or merchantability or fitness for a particular purpose. All such other warranties and representations are hereby cancelled.

Cla-Val shall not be liable for any incidental or consequential loss, damage or expense arising directly or indirectly from the use of the product. Cla-Val shall not be liable for any damages or charges for labor or expense in making repairs or adjustments to the product. Cla-Val shall not be liable for any damages or charges sustained in the adaptation or use of its engineering data and services. No representative of Cla-Val may change any of the foregoing or assume any additional liability or responsibility in connection with the product. The liability of Cla-Val is limited to material replacements F.O.B. Newport Beach, California.

TERMS OF SALE

ACCEPTANCE OF ORDERS

All orders are subject to acceptance by our main office at Newport Beach, California.

CREDIT TERMS

Credit terms are net thirty (30) days from date of invoice.

PURCHASE ORDER FORMS

Orders submitted on customer's own purchase order forms will be accepted only with the express understanding that no statements, clauses, or conditions contained in said order form will be binding on the Seller if they in any way modify the Seller's own terms and conditions of sales.

PRODUCT CHANGES

The right is reserved to make changes in pattern, design or materials when deemed necessary, without prior notice.

PRICES

All prices are F.O.B. Newport Beach, California unless expressly stated otherwise on our acknowledgement of the order. Prices are subject to change without notice. The prices at which any order is accepted are subject to adjustment to the Seller's price in effect at the time of shipment. Prices do not include sales, excise, municipal, state or any other Government taxes. Minimum order charge $75.00.

RESPONSIBILITY

We will not be responsible for delays resulting from strikes, accidents, negligence of carriers, or other causes beyond our control. Also, we will not be liable for any unauthorized product alterations or charges accruing there from.

RISK

All goods are shipped at the risk of the purchaser after they have been delivered by us to the carrier. Claims for error, shortages, etc., must be made upon receipt of goods.

EXPORT SHIPMENTS

Export shipments are subject to an additional charge for export packing.

RETURNED GOODS

1. Customers must obtain written approval from Cla-Val prior to returning any material.
2. Cla-Val reserves the right to refuse the return of any products.
3. Products more than six (6) months old cannot be returned for credit.
4. Specially produced, non-standard models cannot be returned for credit.
5. Rubber goods such as diaphragms, discs, o-rings, etc., cannot be returned for credit, unless as part of an unopened vacuum sealed repair kit which is less than six months old.
6. Goods authorized for return are subject to a 35% ($75 minimum) restocking charge and a service charge for inspection, reconditioning, replacement of rubber parts, retesting, repainting and repackaging as required.
7. Authorized returned goods must be packaged and shipped prepaid to Cla-Val, 1701 Placentia Avenue, Costa Mesa, California 92627.

CLA-VAL

CLA-VAL
PO Box 1325 Newport Beach CA 92659-0325
Phone: 949-722-4800 • Fax: 949-548-5441

CLA-VAL CANADA
4687 Christie Drive
Beamsville, Ontario
Canada LOR 1B4
Phone: 905-563-4963
Fax: 905-563-4040

CLA-VAL EUROPE
Chemin des Mésanges 1
CH-1032 Romanel/
Lausanne, Switzerland
Phone: 41-21-643-15-55
Fax: 41-21-643-15-50

www.cla-val.com

COPYRIGHT CLA-VAL 2003 Printed in USA
Specifications subject to change without notice.

E-Product I.D. (R-4/02)

Represented By:

Kirtland Air Force Base
Bulk Fuels Facility
Mid Plum Pump & Treat System

I&C Controls Submittal

Engineer: CB&I Federal Services LLC
6380 S. Fiddlers Green Circle, Suite 300
Greenwood Village, CO 80111

General Contractor: RMCI
6211 Chappell Rd NE
Albuquerque, NM 87113

Contractor: Corbins Electric
4829 S 38th Street
Phoenix, AZ 85040

Sub Contractor: I&C Solutions
4485 Irving Blvd NW
Albuquerque, NM 87114
(505) 821-8960

The intent of the design was for the RAPID contract to have a remote I/O rack, connected by Ethernet over radio to the permanent treatment system building's controller. It is our understanding that a controller is not necessary to achieve this.

However, a controller in the pump house doesn't prevent the system from running.

It may be more cost effective to remove the controller included. This is left up to the Contractor as either solution is viable.

<u>Submittal includes the following</u>

Flow transmitters
Level Transmitters
Leak Detection Devices for Vaults and Pipe
Control Panels

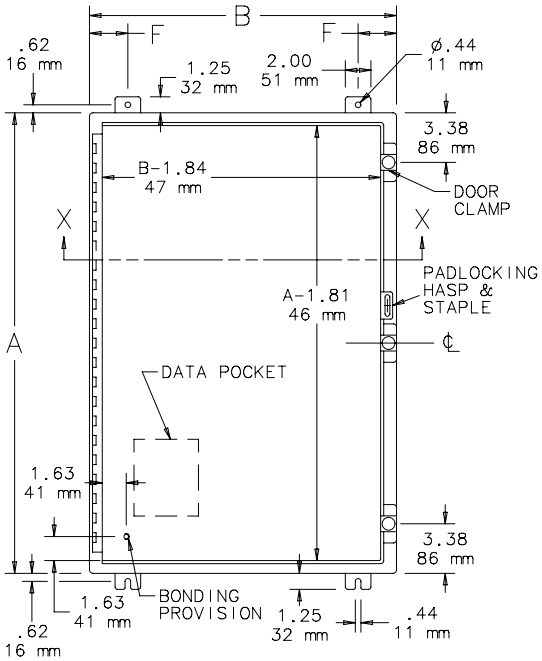

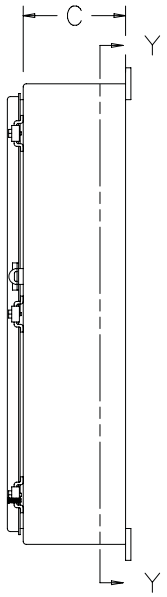

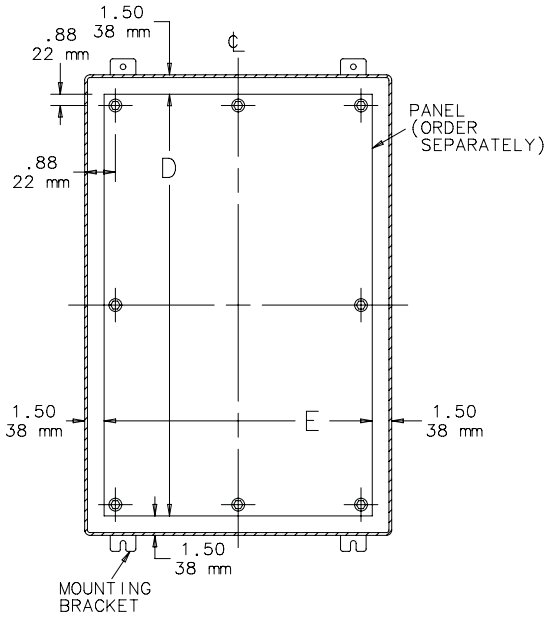

SECTION Y-Y

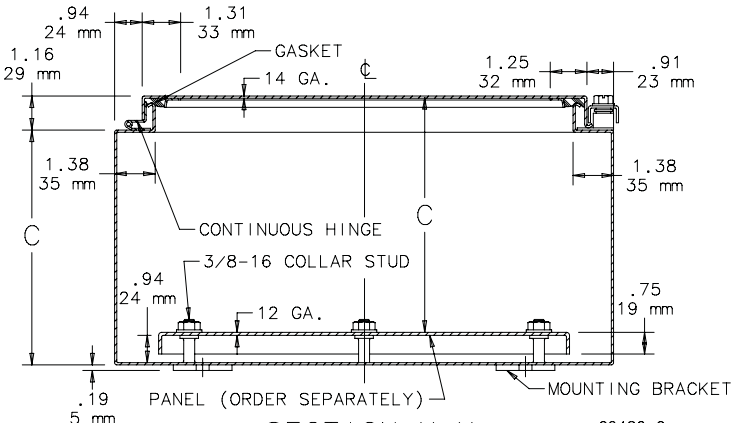

SECTION X-X

BOM #3

800T/H 30.5 mm Trigger Action E-Stops

Allen-Bradley

Product Summary

800T Type 4/13 Metal

Non-Illuminated
- 45 mm plastic head
- 60 mm plastic head
- 63 mm metal head

Illuminated
- 45 mm plastic head
- 60 mm plastic head

Key Release
- 45 mm plastic head

800H Type 4/4X/13 Plastic

Non-Illuminated
- 45 mm plastic head
- 60 mm plastic head

Illuminated
- 45 mm plastic head
- 60 mm plastic head

30.5 mm E-Stops in a state-of-the-art, tamper-resistant design

Time-Tested, Industry Proven

The Allen-Bradley® 800T/H push button product lines are designed and constructed to perform consistently in the most demanding industrial environments. This legacy of leadership continues with the introduction of the innovative 800T/H Trigger Action E-Stop devices.

Global Acceptance

Trigger action functionality provided in a 30.5 mm form factor delivers E-Stop operators that meet global requirements and are more than up to the task for installation in heavy duty applications. The twist release design conforms to functional safety guidelines where intentional action is required to reset the E-Stop device.

Tamper Resistance

Tamper resistance is provided by front-of-panel mounting. The mounting nut installs from back of panel, and is inaccessible when the control cabinet door is closed during normal machine operation. Additionally, the 800T/H Trigger Action E-Stop mushroom caps are factory installed and non-removable, further increasing tamper resistance.

State-of-the-Art Illumination

LED illumination is standard for illuminated devices, using state-of-the-art super bright LED technology. Full voltage or transformer type input is available. Full voltage devices employ the new Universal LED technology, accepting a wide range of 12...130V AC/DC input supply voltage.

Trigger Action E-Stop Units, Non-Illuminated

Trigger Action E-Stop Units, Illuminated

Trigger Action E-Stop Units, Key Release

Features and Benefits

Trigger Action Function

- Contacts can't be teased without latching of operator
- Complies with EN ISO 13850 and EN 60947-5-5
- Positive opening with direct drive contact blocks
- Allows use of standard contact blocks such as 800T-XA (1-NO, 1-NC)

Fixed Mushroom Cap

- Safety red color
- 45 mm, 60 mm and 63 mm (metal) options
- Non-removable for tamper resistance
- Integral "E-STOP" legend available as an option

Twist Release Function

- Conforms to functional safety guidelines
- Intentional action required for E-Stop resetting

Front-of-Panel Mounting

- Operator installs from front of panel and is secured with back-of-panel mounting nut
- E-Stop operator cannot be tampered with during normal machine operation with control cabinet closed

Yellow Bushing

- 800H bushing molded from yellow plastic material further enhances compliance for yellow background of installations

Reliable Contact Block Latching

- Tool-less installation of latch mechanism – snaps onto operator
- Contact block mounting screws secure latch mechanism to operator – latch cannot be removed while contact blocks are installed

Trigger Action E-Stop Units, Non-Illuminated

Add Required 5/5 NO/NC contacts

- 2-position
- Twist Release
- Red mushroom head

Head Type	Contact Configuration	Type 4/13 Metal Catalog Number ⌗	Type 4/4X/13 Plastic Catalog Number ⌗
45 mm Plastic	No Contacts	800T-TFXT6	800H-TFRXT6
	1-NO, 1-NC	800T-TFXT6A	800H-TFRXT6A
	1-SMCB ⤱	800TC-TFXT6D4S	800HC-TFRXT6D4S
60 mm Plastic ✪	No Contacts	800T-TFXJT6	800H-TFRXJT6
	1-NO, 1-NC	800T-TFXJT6A	800H-TFRXJT6A
	1-SMCB ⤱	800TC-TFXJT6D4S	800HC-TFRXJT6D4S
63 mm Anodized Aluminum ✧	No Contacts	800T-TFXLT6	–
	1-NO, 1-NC	800T-TFXLT6A	–
	1-SMCB ⤱	800TC-TFXLT6D4S	–

Trigger Action E-Stop Units, Illuminated

- 2-position
- Twist Release
- Red mushroom head
- LED illumination

Head Type	Contact Configuration	Type	Voltage	Type 4/13 Metal Catalog Number ⌗	Type 4/4X/13 Plastic Catalog Number ⌗
45 mm Plastic	No Contacts	Operator Only		800T-TFXTS00R	800H-TFRXTS00R
	1-NO, 1-NC	Universal	12...130V AC/DC	800T-TFXTQH2RA	800H-TFRXTQH2RA
	1-SMCB ⤱			800TC-TFXTQH2RD4S	800HC-TFRXTQH2RD4S
	1-NO, 1-NC	Transformer	120V AC	800T-TFXTPH16RA	800H-TFRXTPH16RA
	1-SMCB ⤱			800TC-TFXTPH16RD4S	800HC-TFRXTPH16RD4S
60 mm Plastic ✪	No Contacts	Operator Only		800T-TFXJTS00R	800H-TFRXJTS00R
	1-NO, 1-NC	Universal	12...130V AC/DC	800T-TFXJTQH2RA	800H-TFRXJTQH2RA
	1-SMCB ⤱			800TC-TFXJTQH2RD4S	800HC-TFRXJTQH2RD4S
	1-NO, 1-NC	Transformer	120V AC	800T-TFXJTPH16RA	800H-TFRXJTPH16RA
	1-SMCB ⤱			800TC-TFXJTPH16RD4S	800HC-TFRXJTPH16RD4S

Trigger Action E-Stop Units, Key Release

- 2-position
- Familiar DO18 key
- Red mushroom head

Head Type	Contact Configuration	Type 4/13 Metal Catalog Number ⌗
45 mm Plastic	No Contacts	800T-TFXK6
	1-NO, 1-NC	800T-TFXK6A
	1-SMCB ⤱	800TC-TFXK6D4S

⌗ For finger-safe contact block terminals, order 800TC or 800HC
✪ To order a device with "E-STOP" printed on the cap add the letter "E" after "J"; for example: 800T-TFXJET6
✧ To order a device with "E-STOP" engraved on the cap add the letter "E" after "L"; for example: 800T-TFXLET6
⤱ Self-Monitoring Contact Block

BOM #5

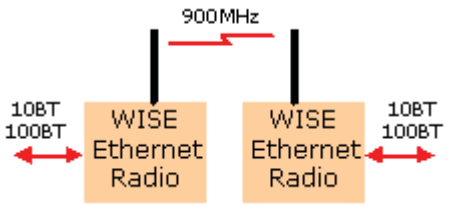

900 MHz Ethernet PLC Radios - Industrial Wireless Ethernet bridges link SCADA network equipment up to 25 miles away

- home
- services
- customers
- white papers
- contact us

Synetcom
Your Industrial Wireless Source

Industrial Wireless Ethernet 900 MHz PLC Radio Modem - 900 MHz FHSS Industrial Wireless Ethernet Radio Modem System

Models: WISE-B-900 (170 KB/s)

Approvals: Class 1, Division 2, Groups A,B,C,D Class 1, Zone 2, Group IIC

Extend Ethernet connections to PLC locations not serviced by your company network with Synetcom's 900 MHz Industrial Wireless PLC Radio Modem product. Connect PLC, RTU, Wireless I/O, data acquisition and remote control equipment with the WISE-B-900 PLC Ethernet Radio - build reliable long distance, license free wireless industrial SCADA systems.

Synetcom's 900 MHz Ethernet Radio systems are designed for reliable high data throughput even if the radio path is not ideal. Higher transmit power and better receiver sensitivity enable Ethernet connections to remote PLC and RTU locations that you could not reach in the past.

For higher data throughput on line of site links, see our 2.4 GHz Ethernet Radio products.

Features

- 900 MHz Frequency Hopping Spread Spectrum FHSS PLC radio
- Wireless networking of PLCs
- Wireless networking of industrial data acquisition and remote control equipment
- Radio is IP addressable
- Wireless Ethernet bridge between PLC, RTU, sensors, controllers and HMI computers
- Long Range - up to 25 miles with 20 dB fade margin - high throughput sustained
- Advanced ARQ, CRC error control, hopping algorithm
- Excellent immunity to interference and multipath fading
- Ethernet Radio repeaters for >25 miles
- Rugged packaging for industrial use - 14GA metal enclosure
- -30°C to + 70°C

900 MHz Industrial Wireless Ethernet PLC Radio

Synetcom's 900 MHz Ethernet PLC Radio is a rugged, long range 900 MHz radio that connects PLC, RTU, I/O and other SCADA equipment. The radio is designed to provide high speed wireless connectivity between PLCs and PLC networks - without compromising reliability and performance. Typical uses include Ethernet bridging, SCADA device networking, PLC networking and industrial wireless data acquisition and control.

The product can function as a high speed bridge between two Ethernet networks, or it can provide wireless networking between an HMI computer + master PLC and multiple remote slave PLCs. Complex data acquisition and control systems can be built using repeaters to extend

Applications

- Wireless Networking of PLCs
- Industrial Wireless Ethernet SCADA systems
- Wireless PLC Data Acquisition
- Wireless PLC Remote Control
- Long Distance Wireless PLC

range and coverage.

Data Throughput and Range

The 900 MHz Ethernet PLC Radio operates with data throughput significantly higher than other industrial (FHSS) Ethernet radios:

WISE-B-900: 150 KB/s (25 miles with 11 dBi gain antennas)

Maximum throughput occurs on a point-to-point link. Error-free data transmission is assured via CRC error checking and ARQ (automatic retransmission of packets with bit errors).

Why doesn't the radio transmit at 10 MB/s? Industrial Ethernet applications often demand long range and high reliability which is obtained only by operating the link more slowly - a limitation of physics, not the radio design.

For example, faster commodity 802.11 Ethernet bridges or routers offer a higher throughout but only over short distances (1-2 miles under ideal conditions) with the same reliability our radios deliver at 25 miles.

Comparison to 2.4 GHz

Our 2.4 GHz Industrial Ethernet Radios typically operate at 220 KB/s or faster by design. Actual data throughput may be compromised if there are obstructions in the radio path. The 900 MHz Wireless Ethernet Modem is less affected by obstructions.

Ethernet Links

Transmission Range:
Synetcom specifies a 25 mile range (900 MHz Ethernet PLC Radio) that includes a 20 dB margin (if the signal fades as much as 20 dB - a factor of 1/100 - the link continues to operate).

Obstructions in the line of sight path reduces range, depending on the type of obstruction. Contact our factory for assistance.

900 MHz Ethernet PLC radio modem specifications>

www.synetcom.com
(310) 379-2000
23879 Madison Street
Torrance, CA 90505

900 MHz PLC radio page 1>

900 MHz Industrial Wireless Ethernet PLC Radio Modem Specifications:

Model - WISE-B-900 PLC Radio
PLC Radio Data Rate - 170 Kbps; Maximum Throughput - 150 KB/s
PLC Interface - 10Base-T
PLC Radio Network Topologies - Point-to-Point or Multipoint
RF Output Power - 500 mW (.5 watt)
RF Modulation - Frequency Hopping Spread Spectrum (FHSS)
Frequency Range - 902 MHz to 928 MHz
Power - 9VDC to 30VDC (external AC power supply included)
Enclosure Material - Aluminum
Enclosure Size - 7.9" x 5.7" x 2.1" (201 x 144 x 53 mm)
Operating Temperature -30º C to +70ºC; 0 to 95% humidity, non-condensing
Licensing Type Certified; License-free operation under FCC Part 15

Industry Approvals: Class 1, Division 2, Groups A,B,C,D Class 1, Zone 2, Group IIC

PLC 900 MHz Radio Connectors

o Power 2-Pin
o RS-232 RJ-11 Configuration Port
o Sync In RJ-11
o Sync Out RJ-11
o 10BT RJ-45
o Antenna RVS TNC

PLC 900 MHz Radio Indicators

Radio Power, Ethernet Link Status, TX, RX, Ethernet Radio Link Status

900 MHz PLC Radio (back view)

back to 900 MHz PLC Radio page 1>

Synetcom
Your Industrial Wireless Source
www.synetcom.com
(310) 379-2000
23879 Madison Street
Torrance, CA 90505

TY-900
Yagi Antenna

The Kathrein-Scala TY series are rugged broadband yagi antennas fabricated of 6061/T6 aluminum rod and seamless drawn pipe, anodized for maximum reliability and corrosion resistance. The hardware and fastenings are stainless steel. The internal balun, coax feed and connector are sealed in a foam potting system to prevent moisture penetration and assure long service life in severe environmental conditions. The heavy aluminum mounting casting allows installation for V or H polarization.

- The TY-900 is specifically designed for professional fixed-station applications in the 890–960 MHz band.

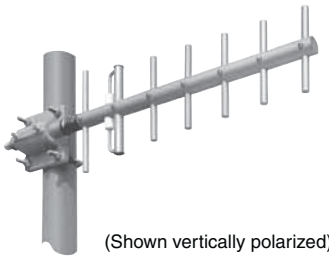

(Shown vertically polarized)

Specifications:

Frequency range	890–960 MHz
Gain	12 dBi
Impedance	50 ohms
VSWR	< 1.5:1 maximum (1.35:1 typical)
Polarization	Horizontal or vertical
Front-to-back ratio	>20 dB
Maximum input power	100 watts (at 50°C)
H-plane beamwidth	48 degrees (half-power)
E-plane beamwidth	40 degrees (half-power)
Connector	N female
Weight	3 lb (1.4 kg)
Dimensions	23 x 7 inches (584 x 178 mm)
Wind load Front/Side	at 93 mph (150kph) 3 lbf / 4 lbf (11 N) / (17 N)
Wind survival rating*	150 mph (240 kph)
Shipping dimensions	28 x 10 x 4.5 inches (710 x 254 x 114 mm)
Shipping weight	5.0 lb (2.3 kg)
Mounting	For masts of 1.25 to 2.375 inch (32 to 60 mm) OD.
See reverse for order information.	

* Mechanical design is based on environmental conditions as stipulated in TIA-222-G-2 (December 2009) and/or ETS 300 019-1-4 which include the static mechanical load imposed on an antenna by wind at maximum velocity. See the Engineering Section of the catalog for further details.

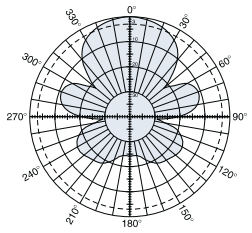

H-plane
Horizontal pattern – V-polarization
Vertical pattern – H-polarization

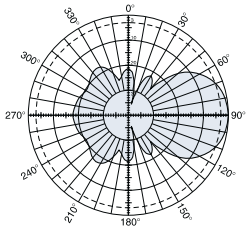

E-plane
Horizontal pattern – H-polarization
Vertical pattern – V-polarization

10065-E

Kathrein Inc., Scala Division Post Office Box 4580 Medford, OR 97501 (USA) Phone: (541) 779-6500 Fax: (541) 779-3991
Email: communications@kathrein.com Internet: www.kathrein-scala.com

TY-900
Yagi Antenna

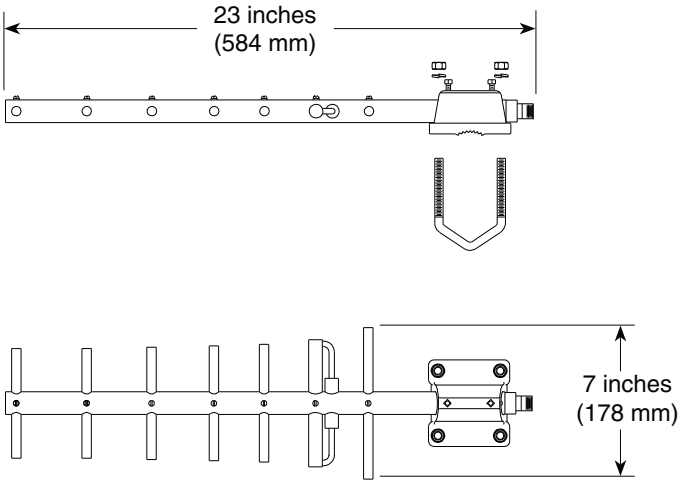

Order Information:

Model	Description
TY-900	Yagi antenna with N connector

All specifications are subject to change without notice. The latest specifications are available at www.kathrein-scala.com.

Kathrein Inc., Scala Division Post Office Box 4580 Medford, OR 97501 (USA) Phone: (541) 779-6500 Fax: (541) 779-3991
Email: communications@kathrein.com Internet: www.kathrein-scala.com

ALL DESIGN, OPERATIVE AND PROCESS DATA PERTAINING TO THE ARTICLE SHOWN ON THIS SHEET IS THE PROPERTY OF POLYPHASER CORPORATION. THE INFORMATION IS NOT TO BE COPIED, REPRODUCED, REVEALED TO OR APPROPRIATED BY OTHERS WITHOUT THE EXPRESS WRITTEN CONSENT OF POLYPHASER CORPORATION.

These commodities or technology are exported from the U.S. in accordance with the Export Administration Regulations. Diversion contrary to U.S. law prohibited.

REVISIONS

REV LTR	DATE	ENG	MKTG	Q.A.
F	03/05/07 CM	AD	–	–

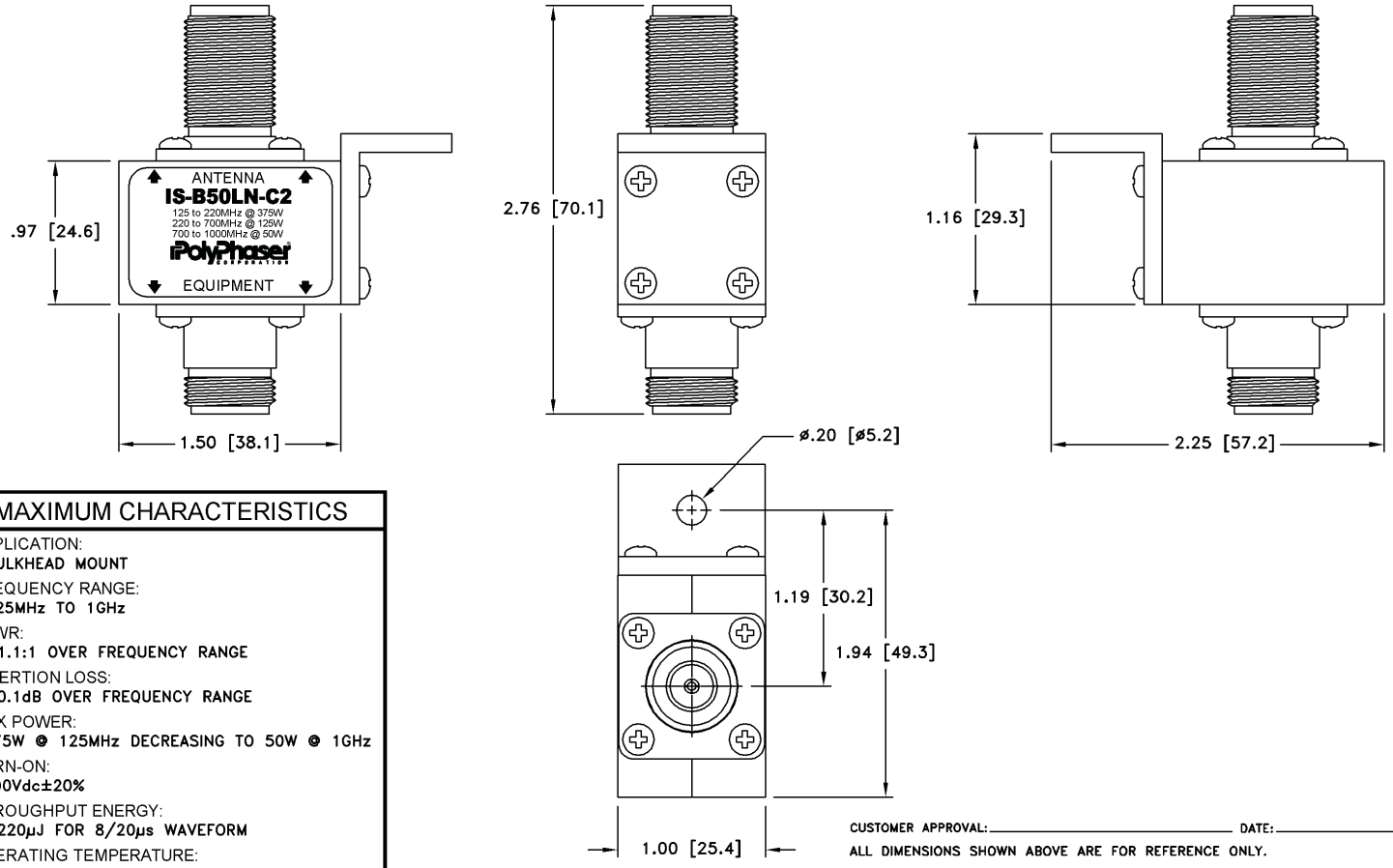

MAXIMUM CHARACTERISTICS

APPLICATION:
BULKHEAD MOUNT

FREQUENCY RANGE:
125MHz TO 1GHz

VSWR:
≤1.1:1 OVER FREQUENCY RANGE

INSERTION LOSS:
≤0.1dB OVER FREQUENCY RANGE

MAX POWER:
375W @ 125MHz DECREASING TO 50W @ 1GHz

TURN-ON:
600Vdc±20%

THROUGHPUT ENERGY:
≤220µJ FOR 8/20µs WAVEFORM

OPERATING TEMPERATURE:
−55°C TO +50°C

STORAGE TEMPERATURE:
−55°C TO +85°C

RELATIVE HUMIDITY:
90% AT 40°C

VIBRATION
1G AT 5Hz TO 100Hz

CUSTOMER APPROVAL: _____ DATE: _____

ALL DIMENSIONS SHOWN ABOVE ARE FOR REFERENCE ONLY.

DRAFTER: M. JOHNSON	DATE: 07/11/94	PolyPhaser
MECH ENGINEER: – – – –	DATE: – – –	P.O. BOX 9000 MINDEN, NV 89423 TEL: 775-782-2511 FAX: 775-782-4476
ELEC ENGINEER: K. BARTEL	DATE: 05/01/95	DWG NO/PART NO/DESCRIPTION: IS-B50LN-C2 CUSTOMER PRINT
MARKETING: – – – –	DATE: – – –	
QUALITY DEPT: R. MATHEUS	DATE: 05/01/95	CAGE CODE: 61114 · FILE NAME: –C1 · SCALE: 1/1 · SHEET: 1 OF 1

FSJ4-50B Product Detail

Product Description

Zoom

Part Number: FSJ4-50B

Manufacturer: CommScope / Andrew

List Price: $4.54

My Price: Login >>

QTY: 1 Add to Cart

Email

1/2" Superflex 50 Ohm Coax Cable

Catalog Description

1/2" Superflexible 50 Ohm Foam HELIAX® Coaxial Cable, corrogated copper. FSJ4-50B is Riser Rated. FSJ4RK-50B - is non-halogenated, fire retarden.

Specifications

Attenuation (dB)/100 Ft.	
30 MHz	0.557
150 MHz	1.28
450 MHz	2.31
824 MHz	3.23
960 MHz	3.52
1500 MHz	4.54
2000 MHz	5.37
2300 MHz	5.83
5800 MHz	10.27
General Characteristics	
Max. Frequency	10.2 GHz
Propagation Velocity	81%
Overall Diameter(in)	.52
Dielectric	Closed Cell Foam Polyethylene
Outer Conductor	Helical Corrugated Solid Copper
Inner Conductor	Copper Clad Aluminum
Min. Bending Radius(in)	1.25"
Warranty	10 Year
Shipping Method	Less Than 350 Ft - UPS
Jacket Material	Black Polyethylene
Ship Weight (lbs.)	.14
Shipping	Parcel Freight

Similar Products

Product Specifications

F4PDMV2-C

7-16 DIN Male for 1/2 in FSJ4-50B cable

CHARACTERISTICS

General Specifications

Interface	7-16 DIN Male
Body Style	Straight
Brand	HELIAX®
Mounting Angle	Straight

Electrical Specifications

Connector Impedance	50 ohm
Operating Frequency Band	0 – 7500 MHz
Cable Impedance	50 ohm
3rd Order IMD	-120 dBm @ 910 MHz
3rd Order IMD Test Method	Two +43 dBm Carriers
RF Operating Voltage, maximum (vrms)	884.00 V
dc Test Voltage	2500 V
Outer Contact Resistance	1.50 mOhm
Inner Contact Resistance	0.80 mOhm
Insulation Resistance, minimum	5000 MOhm
Average Power	1.0 kW @ 900 MHz
Peak Power, maximum	15.60 kW
Insertion Loss, typical	0.05 dB
Shielding Effectiveness	-110 dB

Mechanical Specifications

Outer Contact Attachment Method	Crush-flare
Inner Contact Attachment Method	Captivated
Outer Contact Plating	Trimetal
Inner Contact Plating	Silver
Attachment Durability	25 cycles
Interface Durability	500 cycles
Interface Durability Method	IEC 169-4:9.5
Connector Retention Tensile Force	890 N | 200 lbf
Connector Retention Torque	5.42 N-m | 48.00 in lb
Insertion Force	200.17 N | 45.00 lbf

www.commscope.com

©2009 CommScope, Inc. All rights reserved.
All trademarks identified by ® or ™ are registered trademarks or trademarks, respectively, of CommScope.
All specifications are subject to change. See www.commscope.com for the most current information.

Product Specifications

F4PDMV2-C

Insertion Force Method	IEC 169-1:15.2.4
Pressurizable	No
Coupling Nut Proof Torque	24.86 N-m | 220.00 in lb
Coupling Nut Retention Force	1000.85 N | 225.00 lbf
Coupling Nut Retention Force Method	MIL-C-39012C-3.25, 4.6.22

Dimensions

Nominal Size	1/2 in
Diameter, maximum	34.54 mm | 1.36 in
Length	50.01 mm | 1.97 in
Weight	136.08 g | 0.30 lb

Environmental Specifications

Operating Temperature	-55 °C to +85 °C (-67 °F to +185 °F)
Storage Temperature	-55 °C to +85 °C (-67 °F to +185 °F)
Immersion Depth	1 m
Immersion Test Mating	Mated
Immersion Test Method	IEC 60529:2001, IP68
Water Jetting Test Mating	Mated
Water Jetting Test Method	IEC 60529:2001, IP66
Moisture Resistance Test Method	MIL-STD-202F, Method 106F
Mechanical Shock Test Method	MIL-STD-202F, Method 213B, Test Condition C
Thermal Shock Test Method	MIL-STD-202, Method 107, Test Condition A-1, Low Temperature -55 °C
Vibration Test Method	MIL-STD-202F, Method 204D, Test Condition B
Corrosion Test Method	MIL-STD-1344A, Method 1001.1, Test Condition A

Standard Conditions

Attenuation, Ambient Temperature	20 °C | 68 °F
Average Power, Ambient Temperature	40 °C | 104 °F

Return Loss

Frequency Band	VSWR	Return Loss (dB)
0–2200 MHz	1.03	36.00
2200–2700 MHz	1.05	33.00
2700–3000 MHz	1.05	32.00

Regulatory Compliance/Certifications

Agency	Classification
RoHS 2002/95/EC	Compliant by Exemption
China RoHS SJ/T 11364-2006	Above Maximum Concentration Value (MCV)

©2009 CommScope, Inc. All rights reserved.
All trademarks identified by ® or ™ are registered trademarks or trademarks, respectively, of CommScope.
All specifications are subject to change. See www.commscope.com for the most current information.

Product Specifications

F4PDMV2-C

* Footnotes

Immersion Depth	Immersion at specified depth for 24 hours
Insertion Loss, typical	0.05√freq (GHz) (not applicable for elliptical waveguide)

800.949.7079
order online today at www.talleycom.com

www.commscope.com

©2009 CommScope, Inc. All rights reserved.
All trademarks identified by ® or ™ are registered trademarks or trademarks, respectively, of CommScope.
All specifications are subject to change. See www.commscope.com for the most current information.

BOM #6

Product: 1492-REC15G

Description: 1492 DIN Rail Receptacle

Representative Photo Only
(actual product may vary based on configuration selections)

DIN Rail Receptacle	
Current Rating	15A
Options	Ground Fault Current Interrupt

CERTIFICATIONS AND APPROVALS	
cULus	UL 508A (file# E54866)
For UL Certifications Directory:	http://database.ul.com/cgi-bin/XYV/template/LISEXT/1FRAME/index.htm

SDN-P DIN Rail Series

The SDN DIN Rail power supplies provide industry leading performance. Sag Immunity, transient suppression and noise tolerant, the SDN series ensures compatibility in demanding applications. Power factor correction to meet European directives, hazardous location approvals and optional redundant accessories allow the SDN series to be used in a wide variety of applications. Wide operation temperature range, high tolerance to shock and vibration and reliable design make the SDN series the preferred choice of users.

E61379 E137632 E234790

Applications

- Industrial/Machine Control
- Process Control
- Conveying Equipment
- Material Handling
- Vending Machines
- Packaging Equipment
- DeviceNet™
- Amusement Park Equipment
- Semiconductor Fabrication Equipment

Features

- Power Factor Correction (per EN61000-3-2)
- Auto Select 115/230 Vac, 50/60 Hz Input
- Improved metal mounting clip
- DC OK Signal
- Adjustable Voltage
- Parallel Capability standard on all units
- Industrial grade design
  - -10°C to 60°C operation without derating. Indefinite short circuit, overvoltage and overtemperature protection.
  - Powers high inrush loads without shutdown or foldback
  - Rugged metal case and DIN connector
- Narrow width on rail for space critical applications
- User-friendly front panel
  - Large, rugged, accessible, multiple connection screw terminations
  - Easy installation
- 12 Vdc and 48 Vdc single phase models available
- Highly efficient >90% switching technology
- High MTBF and reliability

Accessories

- Chassis Mount Bracket (SDN-PMBRK2)

Certifications and Compliances *

All Models

- c UL us Listed, Ind. Control Equipment, E61379
  - UL 508, CSA C22.2 No. 107.1
- c UL us UL Recognized Component, ITE, E137632
  - UL 60950-1/CSA C22.2 No. 60950-1, 2nd Edition
- c UL us UL Recognized Component, Haz. Loc., E234790
  - ISA 12.12.01, CSA C22.2 No. 213
  - Class I, Division 2, Groups A, B, C, D
- CE - Low Voltage Directive
  - IEC/EN60950-1, 2nd Edition
- Sag Immunity: SEMI F47
- RoHS Compliant

Models SDN 2.5-24-100P, SDN 4-24-100LP

- Class 2 per UL 1310, CSA C22.2 No. 223

Models SDN 2.5-24-100P, SDN 4-24-100LP, SDN 5-24-100P, SDN 10-24-100P

- Ex ATEX Directive
  - EN50021, Ex II 3 G, Ex nC IIC Gc

Related Products

- SDP™ Series
- SCP Series
- SCL Series
- SDU UPS

* Refer to user manual for installation requirements when used in hazardous locations.

SDN-P Specifications (Single Phase), 24 Vdc Output

Description	Catalog Number			
	SDN 2.5–24–100P	SDN 4–24–100LP	SDN 5–24–100P	SDN 10–24–100P
Input				
Nominal Voltage	115/230 Vac, Auto select			
–AC Range	85-264 Vac	85-132/176-264 Vac		
–DC Range [1]	90 - 375 Vdc	210 - 375 Vdc		
–Frequency	47 - 63 Hz			
Nominal Current [2]	1.3 / 0.7 A	2.1 / 1.0 A	2.2 / 1.0 A	5 / 2 A typ.
–Inrush current max.	typ. < 25 A	typ. < 20 A		typ. < 40 A
Efficiency (Losses [3])	> 87.5% typ. (8.6 W)	> 88% typ. (13.1 W)	> 88% typ. (16.4 W)	> 88% typ. (32.7 W)
Power Factor Correction	Units Fulfill EN61000-3-2			
Output				
Nominal Voltage	24 Vdc (22.5 - 28.5 Vdc adj.)	24 Vdc (22.5 - 28.5 Vdc adj.)	24 Vdc (22.5 - 28.5 Vdc adj.)	
–Tolerance	< ±2% overall (combination Line, load, time and temperature related changes)			
–Ripple [4]	< 50 mVpp			
Overvoltage Protection	< 33 Vdc	< 27 Vdc	< 33 Vdc	
Nominal Current	2.5 A (60 W)	3.8 A (92 W)	5 A (120 W)	10 A (240 W)
–Current Limit	Fold Forward (Current rises, voltage drops to maintain constant power during overload up to max peak current)			
Holdup Time [5]	> 20 ms @ full load			
Parallel Operation	Single or Parallel use is selectable via Front Panel Switch (SDN 2.5, 4 should not be used in parallel as Class 2 rating would be violated.)			
General				
EMC: –Emissions	EN61000-6-3, -4; Class B EN55011, EN55022 Radiated and Conducted including Annex A. EN61000-3-2			
–Immunity	EN61000-6-1, -2; EN61000-4-2 Level 4, EN61000-4-3 Level 3; EN61000-4-6 Level 3; EN61000-4-4 Level 4 input and Level 3 output; EN61000-4-5 Isolation Class 4, EN61000-4-11;			
Temperature	Storage: -25°C...+85°C Operation. -10°-60°C full power with operation to 70°C possible with a linear derating to half power from 60°C to 70°C (Convection cooling, no forced air required). Operation up to 50% load permissible with sideways or front side up mounting orientation.			
Humidity	The relative humidity is < 90% RH, noncondensing; IEC 68-2-2, 68-2-3.			
MTBF:	> 820,000 hours	> 640,000 hours		> 600,000 hours
– Standard	Bellcore Issue 6 Method 1 Case 3 @ 40°C			
Warranty	5 year limited warranty			
General Protection/Safety	Protected against continuous short-circuit, overload, open-circuit. Protection Class 1 (IEC536), degree of protection IP20 (IEC 529) Safe low voltage: SELV (acc. EN60950)			
Status Indicators	Green LED and DC OK signal (N.O. Solid State Contact rated 200 mA / 60 Vdc)			
Installation				
Fusing –Input	Internally fused. External 10 A slow acting fusing for the input is recommended to protect input wiring.			
–Output	Outputs are capable of providing high currents for short periods of time for inductive load startup or switching. Fusing may be required for wire/loads if 2x Nominal O/P current rating cannot be tolerated. Continuous current overload allows for reliable fuse tripping.			
Mounting	Simple snap-on system for DIN Rail TS35/7.5 or TS35/15 or chassis-mounted (optional screw mounting set SDN-PMBRK2 required).			
Connections	Input: IP20-rated screw terminals, connector size range: 16-10 AWG (1.5-6 mm²) for solid conductors. 16-12 AWG (0.5-4 mm²) for flexible conductors. Output: Two connectors per output, connector size range: 16-10 AWG (1.5 - 6 mm²) for solid conductors.			
Case	Fully enclosed metal housing with fine ventilation grid to keep out small parts.			
–Free Space	25 mm above and below, 25 mm left and right, 10 mm in front		25 mm above and below, 25 mm left and right, 15 mm in front	70 mm above and below, 25 mm left and right, 15 mm in front
H x W x D inches (mm)	4.88. x 1.97 x 4.55 (124.0 x 50.0 x 116.0)	4.88 x 2.56 x 4.55 (124.0 x 65.0 x 116.0)		4.88 x 3.26 x 4.55 (124.0 x 83.0 x 116.0)
Weight lbs (kg)	1.6 (.73)	2.4 (1.10)		3.3 (1.50)

1. Not UL listed for DC input.
2. Input current ratings are conservatively specified with low input, worst case efficiency and power factor.
3. Losses are heat dissipation in watts at full load, nominal input line.
4. Ripple/noise is stated as typical values when measured with a 20 MHz, bandwidth scope and 50 Ohm resistor.
5. Full load, 100 Vac Input @ T_{amb} = +25°C

SDN-P Series Dimensions

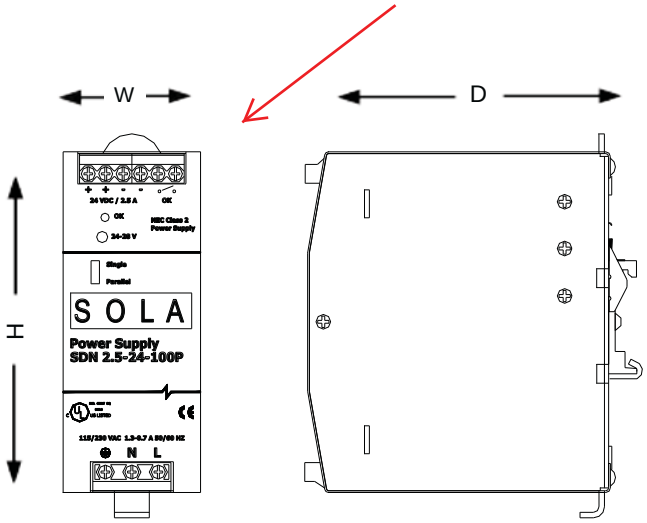

Catalog Number	Dimensions – inches (mm)		
	H	W	D
12 Vdc			
SDN 9–12–100P	4.88 (124.0)	2.56 (65.0)	4.55 (116.0)
SDN 16–12–100P	4.88 (124.0)	3.23 (83.0)	4.55 (116.0)
24 Vdc			
SDN 2.5–24–100P	4.88 (124.0)	1.97 (50.0)	4.55 (116.0)
SDN 4–24–100LP	4.88 (124.0)	2.56 (65.0)	4.55 (116.0)
SDN 5–24–100P	4.88 (124.0)	2.56 (65.0)	4.55 (116.0)
SDN 10–24–100P	4.88 (124.0)	3.26 (83.0)	4.55 (116.0)
48 Vdc			
SDN 5–48–100P	4.88 (124.0)	3.23 (83.0)	4.55 (116.0)

SDN-P Series Mounting

DIN Rail Mounting

Snap on the DIN Rail:

1. Tilt unit slightly backwards
2. Put it onto the DIN Rail
3. Push downwards until stopped
4. Push at the lower front edge to lock
5. Shake the unit slightly to ensure that the retainer has locked

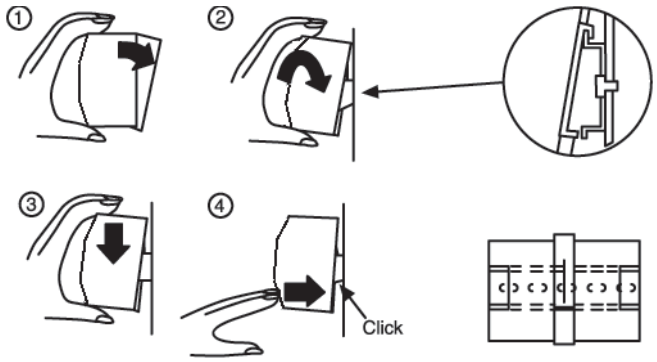

Alternative Panel Mount: Using the optional SDN-PMBRK2 accessory, the unit can be screw mounted to a panel.

Detachment from DIN Rail:

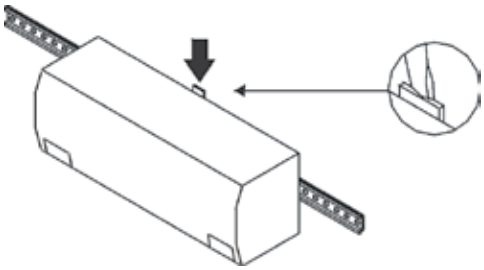

Chassis Mounting

Instead of snapping a SolaHD SDN™ unit on the DIN Rail, you can also attach it using the screw mounting set SDN-PMBRK2.

This set consists of two metal brackets, which replace the existing two aluminum profiles.

Dimensions - in. (mm)

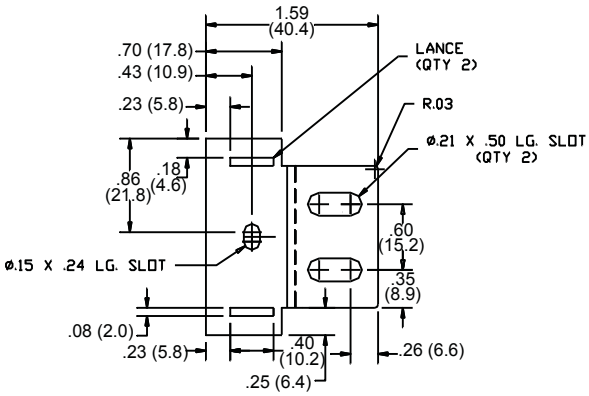

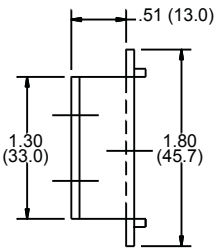

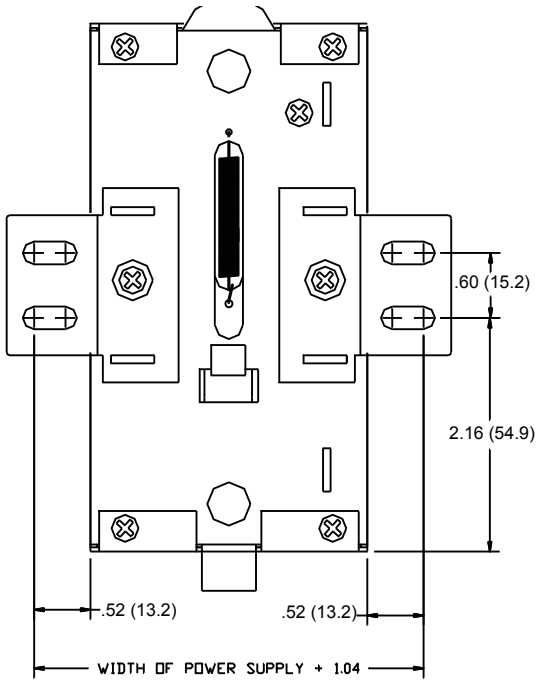

BOM #8

Product: 1492-H5

Description: 1492-H Finger-Safe Terminal Blocks

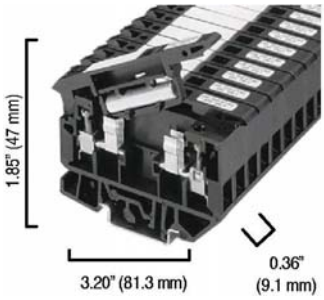

Representative Photo Only (actual product may vary based on configuration selections)

BASE DATA	
Electrical Standards	UL
Type of Device	Finger-Safe Terminal Block
Base Block Type	Single Circuit Fuse Block

DETAIL DATA	
Features	LED Blown Fuse Indicator
Wire Range	#30 - #12 AWG
Color	Black (Standard)
Bulk Pack	No Bulk Pack (Single Block)

CERTIFICATIONS AND APPROVALS	
UR	UL 486E, UL 1059; Reference File: E40735
CSA	CSA C22.2 No. 65, No. 158; On Website, Name: Rockwell, Keyword Search: 1492
IEC	EN 60947-1, EN 60947-7-1(Feed-Through), -2(Ground), -3(Fuse)
Short Circuit Current Rating	This terminal block carries a minimum of 10kA SCCR rating for all protection methods. Please see the table for other possible elevated ratings.
For CSA Certifications:	http://directories.csa-international.org/directorymain.asp
For UL Certifications Directory:	http://database.ul.com/cgi-bin/XYV/template/LISEXT/1FRAME/index.htm

BOM #9

Product: 1492-J3

Description: 1492 IEC Screw Terminal Blocks

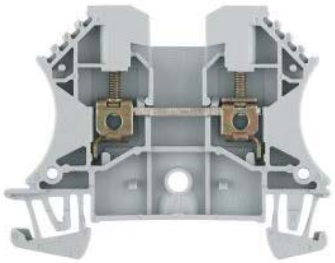

Representative Photo Only (actual product may vary based on configuration selections)

BLOCK STYLE	
Base Block Style	Standard Feed-Through Blocks
BASE DATA	
Base Block Type	One-Circuit Feed-Through Block
DETAIL DATA	
Features	Standard Feedthrough
Maximum Wire Size & Rating	UL: 30-12 AWG (25A @600V AC/DC)\nCSA: 26-12 AWG (20A @600V AC/DC)\nIEC: 2.5mm² (24A @800V AC/DC)\nEEx e II: 2.5mm²/20-14 AWG (21A @ 550V AC/DC)
Color	Gray (Standard)
CERTIFICATIONS AND APPROVALS	
UR	UL 486E, UL 1059; Reference File: E40735, E187022
CSA	CSA C22.2 No. 65, No. 158; On Website, Name: Rockwell, Keyword Search: 1492
IEC	EN 60947-1, EN 60947-7-1(Feed-Through), -2(Ground), -3(Fuse)
ATEX	http://www.rockwellautomation.com/products/certification/ex/excert.html
Short Circuit Current Rating	This terminal block carries a minimum of 10kA SCCR rating for all protection methods. Please see the table for other possible elevated ratings.
For CSA Certifications:	http://directories.csa-international.org/directorymain.asp
For UL Certifications Directory:	http://database.ul.com/cgi-bin/XYV/template/LISEXT/1FRAME/index.htm

BOM #11

Selection Guide

Allen-Bradley

CompactLogix System

Catalog Numbers 1769-L16ER-BB1B, 1769-L18ER-BB1B, 1769-L18ERM-BB1B, 1769-L24ER-QB1B, 1769-L24ER-QBFC1B, 1769-L27ERM-QBFC1B, 1769-L30ER, 1769-L30ER-NSE, 1769-L30ERM, 1769-L33ER, 1769-L33ERM, 1769-L36ERM, 1769-AENTR, 1768-L43, 1768-L43S, 1768-L45, 1768-L45S

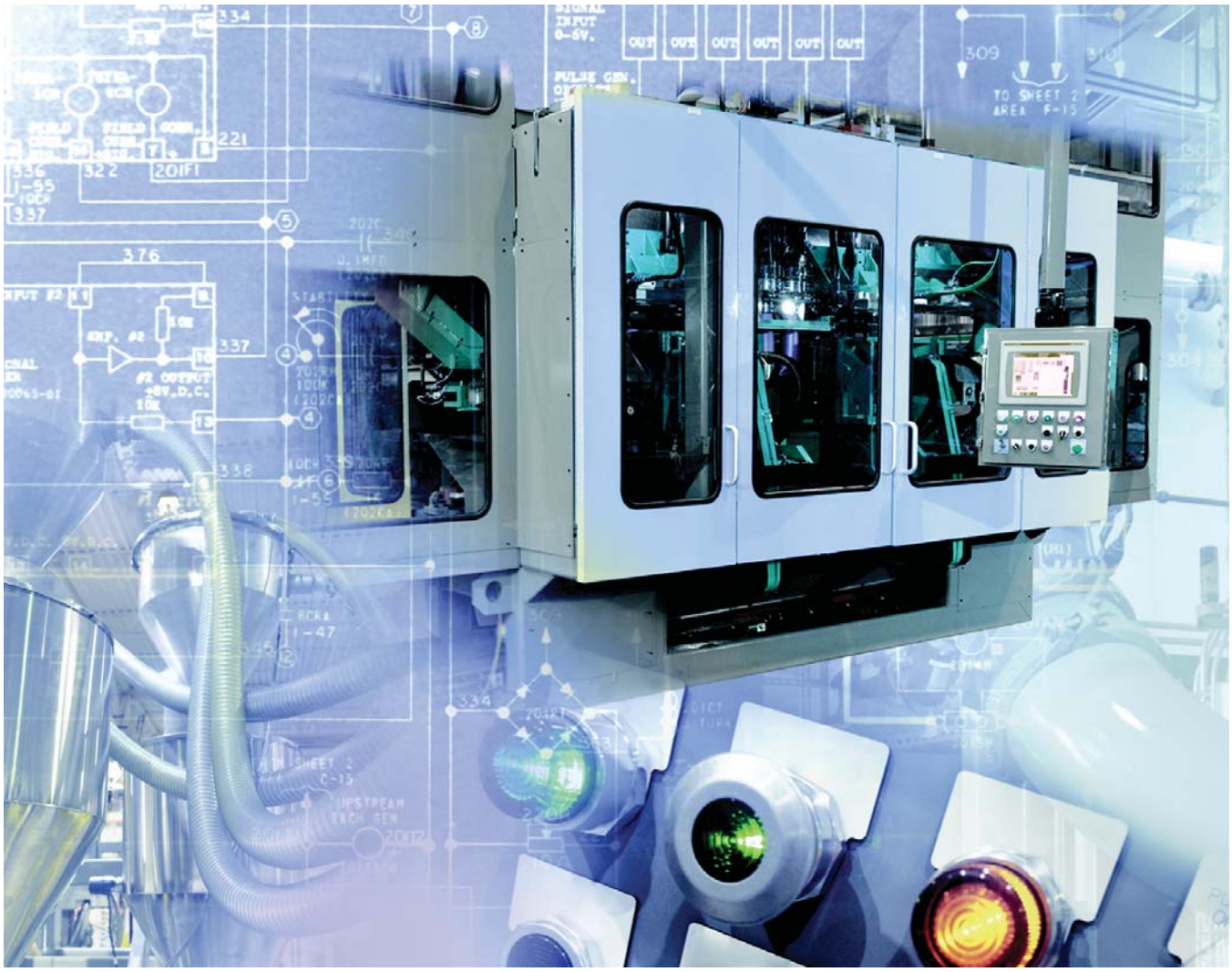

1734 POINT I/O Modules
1769 Compact I/O Modules
1768 Integrated Motion Modules
1768 and 1769 Communication Modules
1768 and 1769 CompactLogix Controllers
1768 and 1769 Compact Power Supplies

LISTEN. THINK. SOLVE.®

Allen-Bradley • Rockwell Software

Rockwell Automation

Logix Controllers Comparison

Characteristic	**ControlLogix** 1756-71, 1756-L72, 1756-L73, 1756-L73XT, 1756-L74, 1756-L75 **GuardLogix** 1756-L72S, 1756-L73S, 1756-L73SXT	**CompactLogix** 1769-L30ER, 1769-L30ER-NSE, 1769-L30ERM, 1769-L33ER, 1769-L33ERM, 1769-L36ERM	**CompactLogix** 1769-L24ER-BB1B, 1769-L24ER-QBFC1B, 1769-L27ERM-QBFC1B	**CompactLogix** 1769-L16ER-BB1B, 1769-L18ER-BB1B, 1769-L18ERM-BB1B	**CompactLogix** 1768-L43, 1768-L45 **Compact GuardLogix** 1768-L43S, 1768-L45S	**SoftLogix 5800™** 1789-L10, 1789-L30, 1789-L60
Controller tasks: • Continuous • Periodic • Event	32; 100 programs/task	32; 100 programs/task	32; 100 programs/task	32; 100 programs/task	• 1768-L43: 16; 32 programs/task • 1768-L45: 30; 32 programs/task	32; 100 programs/task
Event tasks	All event triggers	All event triggers	All event triggers	All event triggers, plus embedded inputs	All event triggers	All event triggers, plus outbound and Windows events
User memory	• 1756-L71: 2 MB • 1756-L72: 4 MB • 1756-L72S: 4 MB + 2 MB safety • 1756-L73, 1756-L73SXT, 1756-L73XT: 8 MB • 1756-L73S: 8 MB + 4 MB safety • 1756-L74: 16 MB • 1756-L75: 32 MB	• 1769-L30ER, 1769-L30ER-NSE, 1769-L30ERM: 1MB • 1769-L33ER, 1769-L33ERM: 2 MB • 1769-L36ERM: 3 MB	• 1769-L24ER: 750 KB • 1769-L27ERM: 1 MB	• 1769-L16ER: 384 KB • 1769-L18ER, 1769-L18ERM: 512 KB	• 1768-L43: 2 MB • 1768-L43S: 2 MB + 0.5 MB safety • 1768-L45: 3 MB • 1768-L45S: 3 MB + 1 MB safety	• 1789-L10: 2 MB; 1 controller; no motion • 1789-L30: 64 MB; 3 controllers • 1789-L60: 64 MB; 6 controllers
Memory card	Secure Digital	Secure Digital	Secure Digital	Secure Digital	CompactFlash	None
Built-in ports	1 USB	2 EtherNet/IP 1 USB	2 EtherNet/IP 1 USB	2 EtherNet/IP 1 USB	1 RS-232	Depends on personal computer
Communication options	• EtherNet/IP (standard and safety) • ControlNet (standard and safety) • DeviceNet (standard and safety) • DH+ • Remote I/O • SynchLink	• Dual-port EtherNet/IP(1) • DeviceNet	• Dual-port EtherNet/IP(1) • DeviceNet	• Dual-port EtherNet/IP(1)	• EtherNet/IP (standard and safety) • ControlNet (standard and safety) • DeviceNet (standard)	• EtherNet/IP • ControlNet • DeviceNet
Controller connections	500	256	256	256	250	250
Network connections	Per module: • 128 ControlNet (CN2/B) • 40 ControlNet (CNB) • 256 EtherNet/IP; 128 TCP (EN2*x*) • 128 EtherNet/IP; 64 TCP (ENBT)	• 1769-L30ER, 1769-L30ER-NSE, 1769-L30ERM: 256 EtherNet/IP; 120 TCP • 1769-L33ER, 1769-L33ERM: 256 EtherNet/IP; 120 TCP • 1769-L36ERM: 256 EtherNet/IP; 120 TCP	• 1769-L24ER: 256 EtherNet/IP; 120 TCP • 1769-L27ERM: 256 EtherNet/IP; 120 TCP	• 1769-L16ER: 256 EtherNet/IP; 120 TCP • 1769-L18ER, 1769-L18ERM: 256 EtherNet/IP; 120 TCP	Per module: • 48 ControlNet • 128 EtherNet/IP; 64 TCP	Per module: • 48 ControlNet • 128 EtherNet/IP; 64 TCP
EtherNet/IP nodes in a single Logix Designer application, max	N/A	• 1769-L30ER, 1769-L30ER-NSE, 1769-L30ERM: 16 • 1769-L33ER, 1769-L33ERM: 32 • 1769-L36ERM: 48	• 1769-L24ER: 8 • 1769-L27ERM: 16	• 1769-L16ER: 4 • 1769-L18ER, 1769-L18ERM: 8	N/A	N/A
Controller redundancy	Full support	Backup via DeviceNet	Backup via DeviceNet	—	Backup via DeviceNet	—
Integrated motion	• Integrated motion on an EtherNet/IP network • SERCOS interface • Analog options	Integrated motion on an EtherNet/IP network	Integrated motion on an EtherNet/IP network	Integrated motion on an EtherNet/IP network	SERCOS interface	• SERCOS interface • Analog encoder input
Programming languages	• Standard task: all languages • Safety task: relay ladder, safety application instructions	• Relay ladder • Structured text • Function block • SFC	• Relay ladder • Structured text • Function block • SFC	• Relay ladder • Structured text • Function block • SFC	• Standard task: all languages • Safety task: relay ladder, safety application instructions	• Relay ladder • Structured text • Function block • SFC • External routines (C/C++)

(1) CompactLogix™ 5370 controllers have two EtherNet/IP ports to connect to an EtherNet/IP network. The ports carry the same network traffic as part of the controller's embedded switch. The controller uses only one IP address.

Select a CompactLogix System

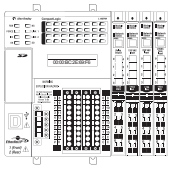

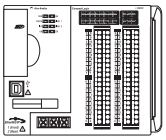

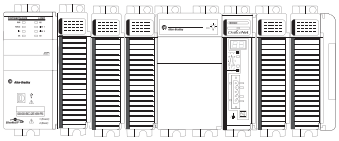

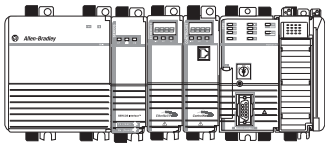

1

[CompactLogix Controllers](Page 7)

Select:

- A controller with sufficient memory
- A memory card

2

[CompactLogix Communication Options](Page 13)

Select:

- Networks
- Communication interfaces
- Associated cables and network equipment

3

[CompactLogix Integrated Motion](Page 16)

Select:

- A CompactLogix 5370 controller for integrated motion on an EtherNet/IP network
- A 1768 CompactLogix controller for SERCOS motion
- Drives, motors, and accessories (use the Motion Analyzer tool)

4

[Compact GuardLogix Integrated Safety](Page 20)

Select:

- A 1768 Compact GuardLogix® controller for integrated safety

5

[Additional Local I/O Modules](Page 24)

Select:

- 1734 POINT I/O™ or 1769 Compact I/O™ modules
- Associated cables and accessories

6

[CompactLogix Power Supplies](Page 30)

Select:

- One 1769 power supply for each CompactLogix 5370 L3 controller
- One 1768 power supply for each 1768 CompactLogix controller
- Additional 1769 power supplies as needed

Optional

[Programming Software](Page 31)

CompactLogix Controllers Overview

The CompactLogix system is designed to provide a Logix solution for small and mid-size applications. Typically, these applications are machine-level control applications. A simple system can consist of a standalone controller with a single bank of I/O modules and DeviceNet communication. In a more complex system, add other networks, motion control, and safety control. As part of the Integrated Architecture™ system, the CompactLogix controllers use the same programming software, network protocol, and information capabilities as all Logix controllers, providing a common development environment for all control disciplines.

- The CompactLogix 5370 L3 controllers deliver scalable, affordable control ideal for applications from small standalone equipment to high-performance indexing tables, process skids, case packers and erectors, and packaging. The CompactLogix 5370 L3 controllers also provide a truly integrated motion solution.
- The CompactLogix 5370 L2 controllers combine the power of the Logix architecture with the flexibility of Compact I/O modules. From small standalone equipment to higher performance applications, these controllers are ideal for assembly machines, hoisting systems, process skids, indexing tables, and packaging.
- The CompactLogix 5370 L1 controllers combine the power of the Logix architecture with the flexibility of POINT I/O. Ideal for small to mid-size machines, these controllers offer value to customers looking for the benefits of Integrated Architecture in a lower cost system.

CompactLogix 5370 System on an EtherNet/IP Network

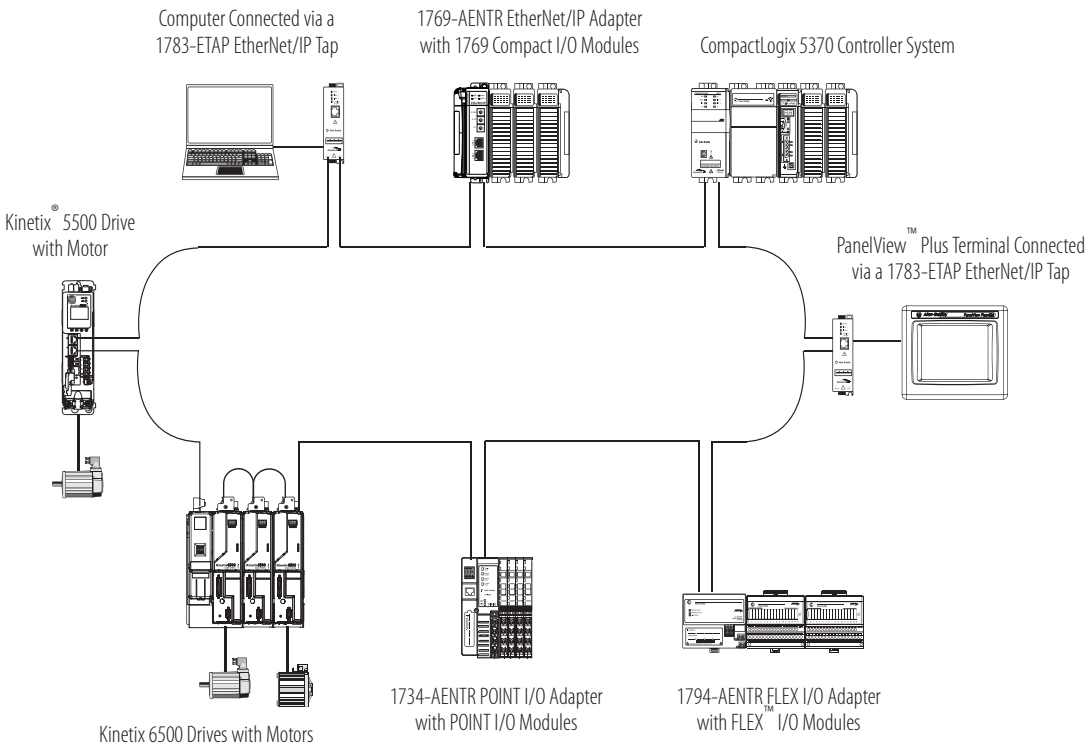

The CompactLogix 5370 L2 and L3 controllers support DeviceNet connectivity.

CompactLogix 5370 System on an DeviceNet Network

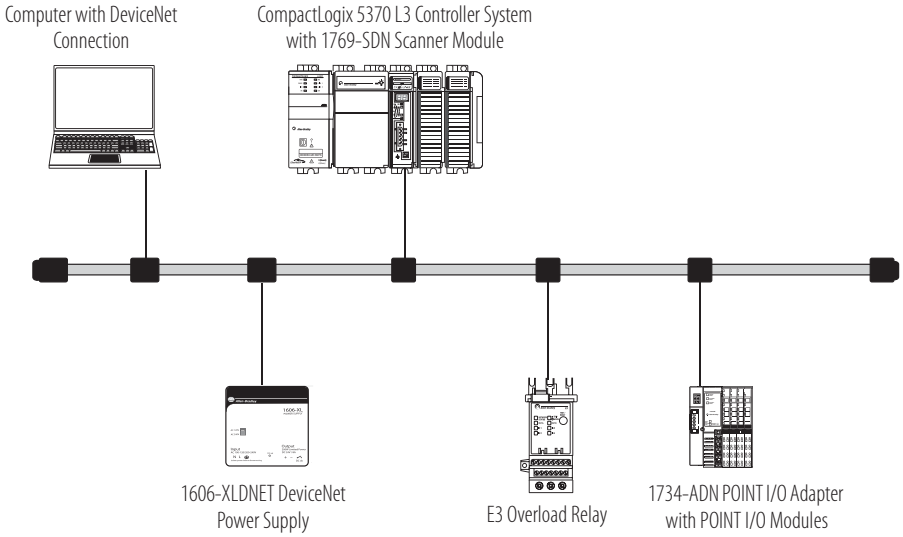

1768 CompactLogix System

The 1768 CompactLogix system combines a 1768 backplane for communication and motion support and a 1769 backplane for I/O support. The 1768 controller is designed for integrated motion, integrated safety, and more complex communication requirements than the other CompactLogix controllers. The 1768 controller has one serial port. Add 1768 modules for motion control, EtherNet/IP communication, and ControlNet communication.

1768 CompactLogix System on an EtherNet/IP Network

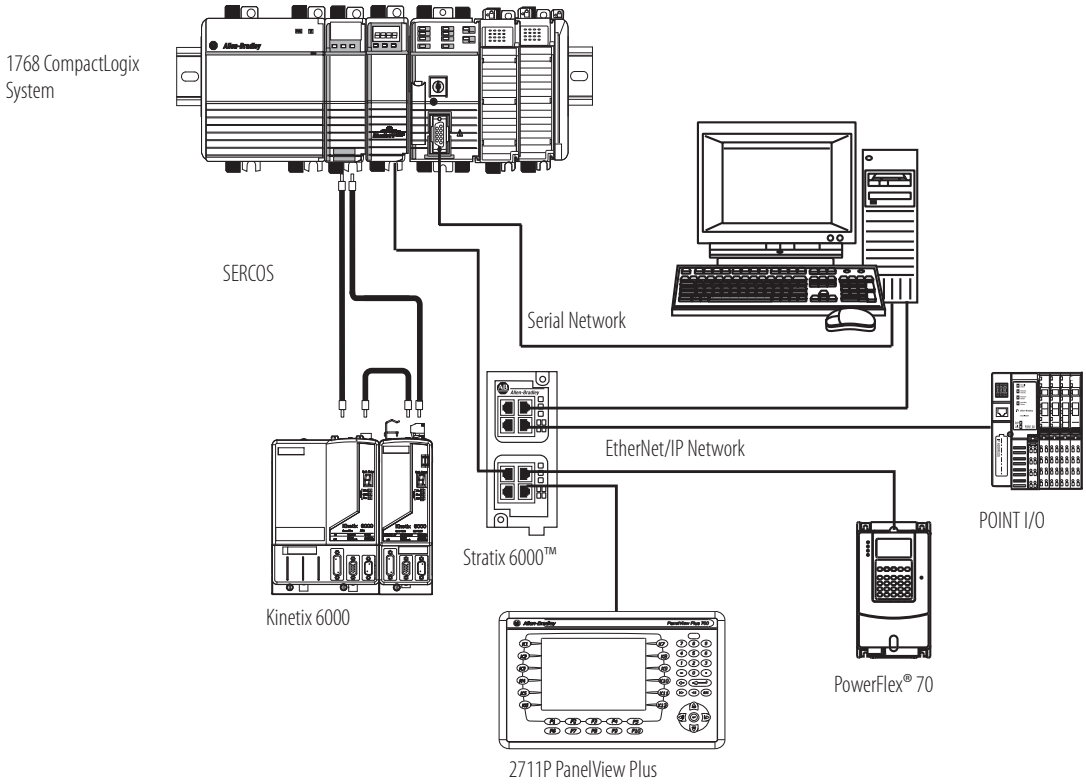

1768 Compact GuardLogix Safety System

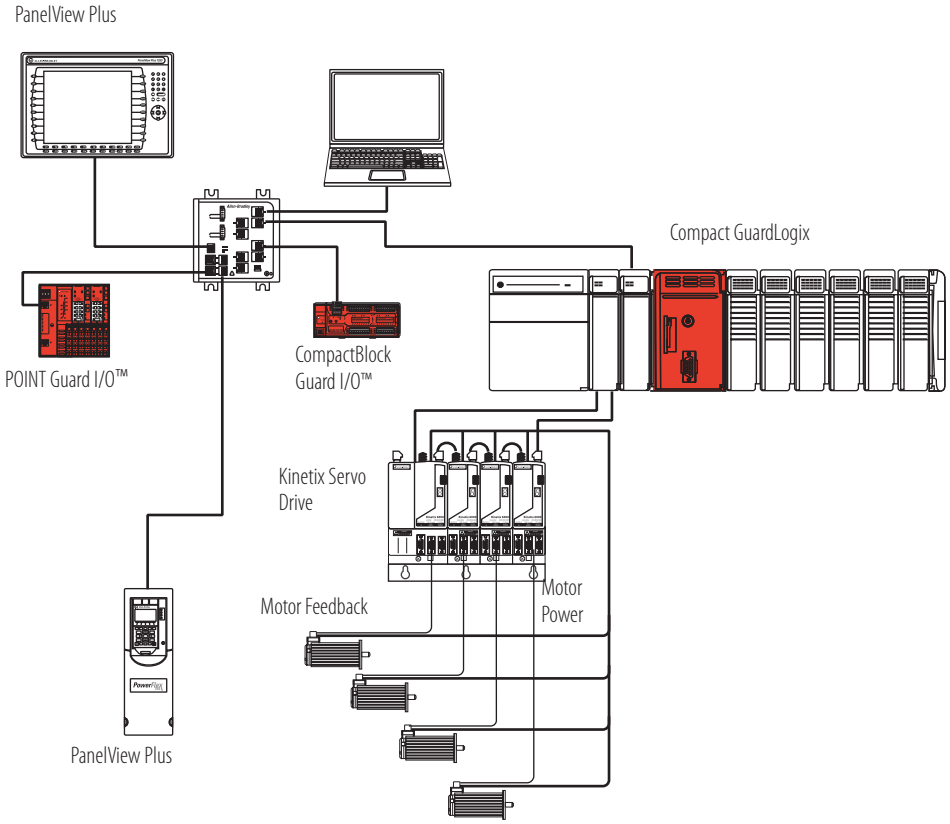

CompactLogix Controllers

The CompactLogix platform brings together the benefits of the Logix platform— common programming environment, common networks, common control engine—in a small footprint with high performance. Combined with Compact I/O modules, the CompactLogix platform is perfect for tackling smaller, machine-level control applications, with or without simple motion, with unprecedented power and scalability. A CompactLogix platform is ideal for systems that require standalone and system-connected control over EtherNet/IP, ControlNet, or DeviceNet networks.

For detailed specifications, see CompactLogix Controllers Specifications Technical Data, publication 1769-TD005.

Characteristic	CompactLogix 5370 L1 Controllers	CompactLogix 5370 L2 Controllers	CompactLogix 5370 L3 Controllers	1768 Controllers
Controller application	Small applications Embedded 1734 I/O modules	Small applications Embedded 1769 I/O modules	General purpose	Integrated safety Integrated SERCOS motion
Controller tasks	32; 100 programs/task	32; 100 programs/task	32; 100 programs/task	• 1768-L43: 16; 32 programs/task • 1768-L45: 30; 32 programs/task
Event tasks	Consumed tag, EVENT instruction, embedded inputs, remote I/O, axis, and motion event triggers	Consumed tag, EVENT instruction, remote I/O, axis, and motion event triggers	Consumed tag, EVENT instruction, remote I/O, axis, and motion event triggers	Consumed tag, EVENT instruction, remote I/O, axis, and motion event triggers
User memory	• 1769-L16ER-BB1B: 384 KB • 1769-L18ER-BB1B, 1769-L18ERM-BB1B: 512 KB	• 1769-L24ER-QB1B, 1769-L24ER-QBFC1B: 750 KB • 1769-L27ERM-QBFC1B: 1 MB	• 1769-L30ER, 1769-L30ERM, 1769-L30ER-NSE: 1MB • 1769-L33ER, 1769-L33ERM: 2 MB • 1769-L36ERM: 3 MB	• 1768-L43: 2 MB • 1768-L43S: 2 MB + 0.5 MB safety • 1768-L45: 3 MB • 1768-L45S: 3 MB + 1 MB safety
Built-in ports	• 2 EtherNet/IP(1) • 1 USB	• 2 EtherNet/IP(1) • 1 USB	• 2 EtherNet/IP(1) • 1 USB	• 1 port RS- 232 serial (DF1 or ASCII)
Communication options	• Dual-port EtherNet/IP	• Dual-port EtherNet/IP • DeviceNet	• Dual-port EtherNet/IP • DeviceNet	• EtherNet/IP (standard and safety) • ControlNet (standard and safety) • DeviceNet (standard)

(1) CompactLogix 5370 controllers have two EtherNet/IP ports to connect to an EtherNet/IP network. The ports carry the same network traffic as part of the controller's embedded switch. The controller uses only one IP address.

For information on estimating memory requirements for you application, see Logix5000 Controllers Execution Time and Memory Use Reference Manual, publication 1756-RM087.

The intent of the design was for the RAPID contract to have a remote I/O rack, connected by Ethernet over radio to the permanent treatment system building's controller. It is our understanding that a controller is not necessary to achieve this.
However, a controller in the pump house doesn't prevent the system from running.
It may be more cost effective to remove the controller pictured here.

CompactLogix 5

In a CompactLogix 5370 L3 controller s
the left and the right of the power sup
on each side of the power supply. The

- dual EtherNet/IP ports for ring to
- USB port for firmware download and programming.

Characteristic	1769-L30ER	1769-L30ERM	1769-L30ER-NSE	1769-L33ER	1769-L33ERM	1769-L36ERM
Available user memory	1 MB	1 MB	1 MB No capacitor	2 MB	2 MB	3 MB
Memory card	1784-SD1 (1 GB), shipped with controller 1784-SD2 (2 GB)					
Communication ports	• 2 EtherNet/IP • 1 USB					
EtherNet/IP connections	• 256 EtherNet/IP • 120 TCP	• 256 EtherNet/IP • 120 TCP	• 256 EtherNet/IP • 120 TCP	• 256 EtherNet/IP • 120 TCP	• 256 EtherNet/IP • 120 TCP	• 256 EtherNet/IP • 120 TCP
EtherNet/IP nodes in a single Logix Designer application, max	16			32		48
Integrated motion on an EtherNet/IP network	—	Supports up to 4 axes	—	—	Supports up to 8 axes	Supports up to 16 axes
Module expansion capacity	8 1769 modules 1 bank of modules			16 1769 modules 2 banks of modules		30 1769 modules 3 banks of modules
Battery	None					
Power supply distance rating	4 modules			4 modules		4 modules
Programming software support	• RSLogix 5000 software, version 20 - For controllers that use firmware revision 20.*xxx*. • Logix Designer application, version 21 or later - For controllers that use firmware revision 21.*xxx* or later.					

These controllers replace previous catalog numbers.

New Controller(1)	Replaces Previous Controller(2)	Differences
1769-L30ER 1769-L30ERM 1769-L30ER-NSE	1769-L31 1769-L32C(3) 1769-L32E	• Additional memory • Integrated motion on EtherNet/IP support (1769-L30ERM, 1769-L33ERM, 1769-L36ERM) • USB port instead of RS-232 port • Dual-port EtherNet/IP support • SD card instead of CompactFlash card
1769-L33ER 1769-L33ERM	1769-L35CR(3) 1769-L35E	
1769-L36ERM	Any previous 1769-L3*x* controller	

(1) IMPORTANT: Typically, you can use any of the new controllers listed in each row as replacements for any of the previous controllers listed in the corresponding cell to the right. For example, you can replace a 1769-L32E with a 1769-L30ER, 1769-L30ERM, or 1769-L30ER-NSE controller.
In some rare cases, system configuration prevents controller replacement as shown above. For example, if your system uses a 1769-L32E controller with 12 expansion modules, you cannot replace that controller with a 1769-L30ER, 1769-L30ERM, or 1769-L30ER-NSE controller. Those controllers support no more than 8 expansion modules. You must replace the 1769-L32E controller with a 1769-L33ER, 1769-L33ERM, or 1769-L36ERM controller.
We recommend that before you upgrade your controllers, consider your application requirements to verify that the replacements listed above apply.

(2) These catalog numbers are still available for sale, see page 12 for details. Please contact your local Rockwell Automation sales office for ordering information.

(3) Requires converting from ControlNet connections to EtherNet/IP connections.

CompactLogix Communication Options

You can configure your system for information exchange between a range of devices and computing platforms and operating systems. Select a CompactLogix controller with integrated communication or the appropriate communication module.

For detailed specifications, see:

- CompactLogix Controllers Specifications Technical Data, publication 1769-TD005.
- CompactLogix Communication Modules Specifications Technical Data, publication 1769-TD007.

EtherNet/IP Communication Options

The Ethernet Industrial network protocol (EtherNet/IP) is an open industrial-networking standard that supports both real-time I/O messaging and message exchange. The EtherNet/IP network uses off-the-shelf Ethernet communication chips and physical media.

Dual-port EtherNet/IP support embeds switch technology directly in the controller to so the controller can operate on star, linear, or ring EtherNet/IP topologies.

Cat. No.	Description	Communication Rate	Logix Resources(1)	TCP/IP Connections
1769-L16ER-BB1B,	CompactLogix 5370 L1 controller with integrated EtherNet/IP dual-port, POINT I/O form factor	10/100 Mbps	4 nodes 256 EtherNet/IP connections	120
1769-L18ER-BB1B, 1769-L18ERM-BB1B			8 nodes 256 EtherNet/IP connections	
1769-L24ER-BB1B, 1769-L24ER-QBFC1B	CompactLogix 5370 L2 controller with integrated EtherNet/IP dual-port, Compact I/O form factor	10/100 Mbps	8 nodes 256 EtherNet/IP connections	120
1769-L27ERM-QBFC1B		10/100 Mbps	16 nodes 256 EtherNet/IP connections	
1769-L30ER, 1769-L30ERM	CompactLogix 5370 L3 controller with integrated EtherNet/IP dual-port	10/100 Mbps	16 nodes 256 EtherNet/IP connections	120
1769-L33ER, 1769-L33ERM			32 nodes 256 EtherNet/IP connections	
1769-L36ERM			48 nodes 256 EtherNet/IP connections	
1769-AENTR	1769 EtherNet/IP adapter	10/100 Mbps	128 EtherNet/IP connections	96
1768-ENBT	1768 EtherNet/IP communication bridge module	10/100 Mbps	128 EtherNet/IP connections	64
1768-EWEB	1768 Ethernet web server module	10/100 Mbps	128 EtherNet/IP connections	64

(1) The number of nodes listed for CompactLogix 5370 controllers represents the maximum number of EtherNet/IP nodes you can include in a Logix Designer application project for those controller. For example, in a Logix Designer application project that uses a 1769-L18ERM-BB1B controller, you can add as many as 8 EtherNet/IP nodes to the project.

Serial Communication Options

These CompactLogix controllers support serial communication.

Cat. No.	Serial Options
1769-L16ER-BB1B, 1769-L18ER-BB1B, 1769-L18ERM-BB1B	1734-232ASC module for an RS-232 serial interface 1734-485 ASC module for an RS-422 and RS-485 serial device
1769-L24ER-BB1B, 1769-L24ER-QBFC1B	1769-ASCII module for an ASCII interface to RS-232, RS-422, and RS-485 devices 1769-SM2 module for a Modbus RTU interface
1769-L27ERM-QBFC1B	
1769-L30ER, 1769-L30ERM	
1769-L33ER, 1769-L33ERM	
1769-L36ERM	
1768-L43, 1768-L43S, 1768-L45, 1768-L45S	Built-in serial port 1769-ASCII module for an ASCII interface to RS-232, RS-422, and RS-485 devices 1769-SM2 module for a Modbus RTU interface

Modbus Support

To access a Modbus TCP network, connect through the embedded Ethernet port of the CompactLogix 5370 controllers and execute a specific ladder-logic routine. For more information, see Knowledgebase document 470365 at http://www.rockwellautomation.com/knowledgebase/.

To access a Modbus RTU network, connect through the serial port (if available) and execute a specific ladder-logic routine. For more information, see Using Logix5000 Controllers as Masters or Slaves on Modbus Application Solution, publication CIG-AP129.

1734 Specialty I/O Modules

Cat. No.	Description	Wiring Base	POINTBus Current
1734-232ASC	The 1734-232ASC and 1734-485ASC serial interface modules offer a serial-link communication interface solution for peripheral products with RS-232 (only 1734-232ASC), RS-485, and RS-422 ports (only 1734-485ASC.)	1734-TB, 1734-TBS	75 mA
1734-485ASC			
1734-ARM	The 1734-ARM address reserve module reserves address and slot numbers to maintain a numbering scheme of an existing system. The 1734-ARM has no module configuration and does not communicate I/O data.	1734-TB, 1734-TBS	75 mA
1734-CTM	The common terminal module (1734-CTM) and voltage term66inal module (1734-VTM) expand the termination capabilities of POINT I/O modules. Install the modules to provide support for higher density (8 channel) POINT I/O modules.	1734-TB, 1734-TBS, 1734-TOP, 1734-TOPS	75 mA
1734-VTM			
1734-SSI	The 1734-SSI module collects serial data from absolute-position, encoding sensors that use standard Synchronous Serial Interface (SSI) protocol.	1734-TB, 1734-TBS	110 mA

1769 Compact I/O Modules

The 1769 Compact I/O modules can be installed on the CompactLogix 5370 L2 and L3 controllers and 1768 CompactLogix controllers. The modules mechanically lock together by means of a tongue-and-groove design and have an integrated communication bus that is connected from module to module by a moveable bus connector.

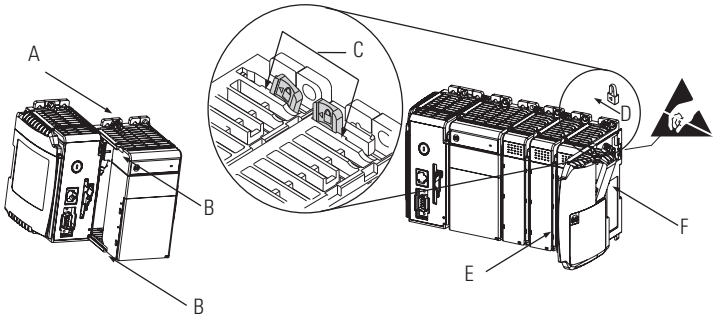

Each I/O module includes a built-in removable terminal block with finger-safe cover for connections to I/O sensors and actuators. The terminal block is behind a door at the front of the module. I/O wiring can be routed from beneath the module to the I/O terminals.

For detailed specifications, see 1769 Compact I/O Modules Specifications Technical Data, publication 1769-TD006.

Power Supply Distance Ratings

Check each module's specification table for the power supply distance rating. This indicates how many slot positions the module can be from the power supply.

1769 AC Digital Modules

Cat. No.	Inputs/Outputs	Voltage Category	Operating Voltage Range	Backplane Current	Power Supply Distance Rating
1769-IA8I	8 inputs, individually isolated	100/120V AC	79…132V AC, 47…63 Hz	90 mA @ 5.1V(1)	8
1769-IA16	16 inputs	100/120V AC	79…132V AC, 47…63 Hz	115 mA @ 5.1V	8
1769-IM12	12 inputs	200/240V AC	159…265V AC, 47…63 Hz	100 mA @ 5.1V	8
1769-OA8	8 outputs	100/240V AC	85…265V AC 47…63 Hz	145 mA @ 5.1V	8
1769-OA16	16 outputs	100/240V AC	85…265V AC 47…63 Hz	225 mA @ 5.1V	8

(1) Maximum is 190 mA.

1769 DC Digital Modules

Cat. No.	Inputs/Outputs	Voltage Category	Operating Voltage Range	Backplane Current	Power Supply Distance Rating
1769-IG16	16 inputs	5V DC TTL	4.5…5.5V DC	120 mA @ 5.1V	8
1769-IQ16	16 inputs	24V DC sink/source	10…30V DC @ 30 °C (86 °F) 10…26.4V DC @ 60 °C (140 °F)	115 mA @ 5.1V	8
1769-IQ16F	16 inputs, high-speed	24V DC sink/source	10…30V DC @ 30 °C (86 °F) 10…26.4V DC @ 60 °C (140 °F)	100 mA @ 5.1V	8
1769-IQ32	32 inputs	24V DC sink/source	10…30V DC @ 30 °C (86 °F) 10…26.4V DC @ 60 °C (140 °F)	170 mA @ 5.1V	8
1769-IQ32T	32 inputs	24V DC sink/source	20.4…26.4V DC @ 60 °C (140 °F)	170 mA @ 5.1V	8
1769-IQ6XOW4	6 inputs 4 outputs	24V DC sink/source input AC/DC normally open relay contact outputs	10…30V DC @ 30 °C (86 °F) 10…26.4V DC @ 60 °C (140 °F)	105 mA @ 5.1V 50 mA @ 24V	8
1769-OB8	8 outputs	24V DC source	20.4…26.4V DC	145 mA @ 5.1V	8
1769-OB16	16 outputs	24V DC source	20.4…26.4V DC	200 mA @ 5.1V	8
1769-OB16P	16 outputs, protected	24V DC source	20.4…26.4V DC	160 mA @ 5.1V	8
1769-OB32	32 outputs	24V DC source	20.4…26.4V DC	300 mA @ 5.1V	6
1769-OB32T	32 outputs	24V DC source	10.2…26.4V DC	220 mA @ 5.1V	8
1769-OG16	16 outputs	5V DC TTL	4.5…5.5V DC	200 mA @ 5.1V	8
1769-OV16	16 outputs	24V DC sink	20.4…26.4V DC	200 mA @ 5.1V	8
1769-OV32T	32 outputs	24V DC sink	10.2…26.4V DC	300 mA @ 5.1V	8

1769 Contact Output Modules

Cat. No.	Inputs/Outputs	Operating Voltage Range	Backplane Current	Power Supply Distance Rating
1769-OW8	8 outputs	5…265V AC 5…125V DC	125 mA @ 5.1V 100 mA @ 24V	8
1769-OW8I	8 outputs, individually isolated	5…265V AC 5…125V DC	125 mA @ 5.1V 100 mA @ 24V	8
1769-OW16	16 outputs	5…265V AC 5…125V DC	205 mA @ 5.1V 180 mA @ 24V	8

1769 Analog Modules

Cat. No.	Inputs/Outputs	Range	Resolution	Backplane Current	Power Supply Distance Rating
1769-IF4	4 inputs, differential or single-ended	±10V, 0…10V, 0…5V, 1…5V 0…20 mA, 4…20 mA	14 bits (unipolar) 14 bits plus sign (bipolar)	120 mA @ 5.1V 60 mA @ 24V	8
1769-IF4I	4 inputs, differential or single-ended, individually isolated	±10V, 0…10V, 0…5V, 1…5V 0…20 mA, 4…20 mA	16 bits (unipolar) 15 bits plus sign (bipolar)	145 mA @ 5.1V 125 mA @ 24V	8
1769-IF8	8 inputs, differential or single-ended	±10V, 0…10V, 0…5V, 1…5V 0…20 mA, 4…20 mA	16 bits (unipolar) 15 bits plus sign (bipolar)	120 mA @ 5.1V 70 mA @ 24V	8
1769-IF16C	16 inputs, single-ended	0…20 mA, 4…20 mA	16 bits (unipolar) 15 bits plus sign (bipolar)	190 mA @ 5.1V 70 mA @ 24V	8
1769-IF16V	16 inputs, differential	±10V, 0…10V, 0…5V, 1…5V	16 bits (unipolar) 15 bits plus sign (bipolar)	190 mA @ 5.1V 70 mA @ 24V	8
1769-IF4XOF2	4 differential or single-ended inputs 2 single-ended outputs	0…10V 0…20 mA	Input: 8 bits plus sign Output: 8 bits plus sign	120 mA @ 5.1V 160 mA @ 24V	8
1769-IF4FXOF2F	4 fast differential or single-ended inputs 2 fast single-ended outputs	±10V, 0…10V, 0…5V, 1…5V 0…20 mA, 4…20 mA	Input: 14 bits (unipolar) 14 bits plus sign (bipolar) Output: 13 bits (unipolar) 13 bits plus sign (bipolar)	220 mA @ 5.1V 120 mA @ 24V	8
1769-OF2	2 outputs, single-ended	±10V, 0…10V, 0…5V, 1…5V 0…20 mA, 4…20 mA	14 bits (unipolar) 14 bits plus sign (bipolar)	120 mA @ 5.1V 120 mA @ 24V	8
1769-OF4	4 outputs, single-ended	±10V, 0…10V, 0…5V, 1…5V 0…20 mA, 4…20 mA	15 bits plus sign unipolar and bipolar	120 mA @ 5.1V 170 mA @ 24V	8
1769-OF4CI	4 outputs, differential, individually isolated	0…20 mA 4…20 mA	16 bits (unipolar)	140 mA @ 5.1V 145 mA @ 24V	8
1769-OF4VI	4 outputs, differential, individually isolated	±10V 0…10V 0…5V 1…5V	15 bits plus sign (bipolar)	145 mA @ 5.1V 75 mA @ 24V	8
1769-OF8C	8 outputs, single-ended	0…20 mA 4…20 mA	16 bits (unipolar)	140 mA @ 5.1V 145 mA @ 24V	8
1769-OF8V	8 outputs, single-ended	±10V 0…10V 0…5V 1…5V	16 bits plus sign (bipolar)	145 mA @ 5.1V 125 mA @ 24V	8

1769 Analog RTD and Thermocouple Modules

Cat. No.	Inputs/Outputs	Sensors Supported	Backplane Current	Power Supply Distance Rating
1769-IR6	6 RTD inputs	100, 200, 500, 1000 Ω Platinum 385 100, 200, 500, 1000 Ω Platinum 3916 120 Ω Nickel 618 120 Ω Nickel 672 10 Ω Nickel-iron 518 0…150 Ω, 0…500 Ω, 0…1000 Ω, 0…3000 Ω	100 mA @ 5.1V 45 mA @ 24V	8
1769-IT6	6 thermocouple inputs	Thermocouple types B, C, E, J, K, N, R, S, T ±50V, ±100V	100 mA @ 5.1V 45 mA @ 24V	8(1)

(1) To reduce the effects of electrical noise, install the 1769-IT6 module at least two slots away from the AC power supplies.

1769 Specialty I/O Modules

Cat. No.	Description	Backplane Current	Power Supply Distance Rating
1769-ARM	Use a 1769-ARM address reserve module to reserve module slots. After creating an I/O configuration and user program, you can remove and replace any I/O module in the system with a 1769-ARM module once you inhibit the removed module in the Logix Designer application.	60 mA @ 5.1V	8
1769-ASCII	The 1769-ASCII module, a general purpose two-channel ASCII interface, provides a flexible network interface to a wide variety of RS-232, RS-485, and RS-422 ASCII devices. The module provides the communication connections to the ASCII device.	425 mA @ 5.1V	4
1769-BOOLEAN	Use the 1769-BOOLEAN module in applications that require repeatability, such as material handling and packaging, when there is a requirement to activate an output based on an input's transition. If the Boolean expression is true, the output is directed to the ON state. If the Boolean expression is false, the output channel is directed to the OFF state. There are four operators that you can configure as OR, AND, XOR, or none.	220 mA @ 5.1V	8
1769-HSC	Use the 1769-HSC when you need: • a counter module that is capable of reacting to high-speed input signals. • to generate rate and time-between-pulses (pulse interval) data. • as many as two channels of quadrature or four channels of pulse/count inputs.	245 mA @ 5.1V	4
1769-SM1	The Compact I/O to DPI/SCANport™ module connects to PowerFlex 7-class drives, other DPI-based host devices, and SCANport-based host devices such as 1305 and 1336 PLUS II drives.	280 mA @ 5.1V	6
1769-SM2	The Compact I/O to DSI/Modbus module connects to PowerFlex 4-class drives and to other Modbus RTU slave devices, such as PowerFlex 7-class drives with 20-COMM-H RS485 HVAC adapters.	350 mA @ 5.1V	4

1769 Expansion Cables

If you divide 1769 modules into multiple banks, make sure:

- each bank needs its own power supply.
- use expansion cables to connect the banks.
- the last I/O bank requires an end cap.

Vertical

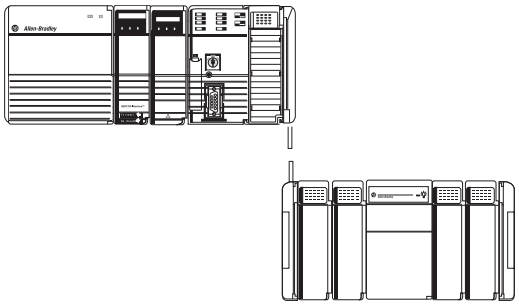

Horizontal

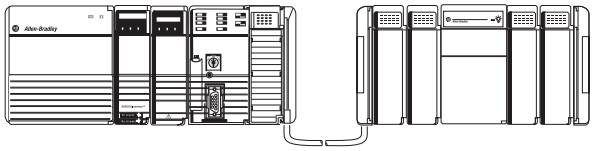

How you orient I/O banks determines the expansion cables you need to connect the I/O banks.

If you add a	And connect the chassis	Use this cable[1]
Second bank	Right to left	1769-CRL*x*
	Right to right	1769-CRR*x*
Third bank	Right to left	1769-CRL*x*
	Right to right	1769-CRR*x*
	Left to left	1769-CLL*x*

(1) Where *x* = 1 for 1 ft (305 mm) or 3 for 3.28 ft (1 m).

1769 End Caps

The final 1769 Compact I/O bank requires an end cap on the end without the expansion cable. The CompactLogix 5370 L2 controller comes with a right-end cap, so you do not need to order one separately.

- Right end cap, catalog number 1769-ECR
- Left end cap, catalog number 1769-ECL

1769 Wiring Systems

As an alternative to buying removable terminal blocks (RTBs) and connecting the wires yourself, you can buy a wiring system of:

- interface modules (IFMs) that provide the output terminal blocks for digital I/O modules. Use the pre-wired cables that match the I/O module to the IFM.
- analog interface modules (AIFMs) that provide the output terminal blocks for analog I/O modules. Use the pre-wired cables that match the I/O module to the AIFM.
- I/O module-ready cables. One end of the cable assembly is an RTB that plugs into the front of the I/O module. The other end has individually color-coded conductors that connect to a standard terminal block.

Removable Terminal Kits

You can order removable terminal kits with the CompactLogix 5370 L1 and L2 controllers separately. The kits are used to connect wiring to the controllers. describes the kits.

Cat. Nos.	Controllers Supported	Description
1769-RTB45	CompactLogix 5370 L1	• Four 10-pin connectors used to connect wiring to the controllers' embedded digital I/O module. • One 5-pin connector used to connect an external 24V DC power source to the controller.
1769-RTB40DIO	CompactLogix 5370 L2	Four 10-pin connectors used to connect wiring to the controllers' embedded digital I/O module.
1769-RTB40AIO	1769-L24ER-QBFC1B and 1769-L27ERM-QBFC1B	Four 10-pin connectors used to connect wiring to the controllers' embedded analog I/O module.

CompactLogix Power Supplies

Select power supplies based on the controller and the number of additional I/O banks.

For a	Select
CompactLogix 5370 L3 controller	• One 1769 power supply for the controller and local I/O modules • One 1769 power supply for each additional bank of I/O modules
CompactLogix 5370 L2 controller	No power supply as it is integral to the controller package
CompactLogix 5370 L1 controller	No power supply as it is integral to the controller package
1768 CompactLogix controller	• One 1768 power supply for the controller and 1768 modules • One 1769 power supply for each additional bank of I/O modules

Power Supplies

Cat. No.	Description	Voltage Category	Operating Voltage Range
1769-PA2	1769 Compact I/O expansion power supply	120V/220V AC	85...265V AC
1769-PB2		24V DC	19.2...31.2V DC
1769-PA4		120V/220V AC	85...265V AC or 170...265V AC (switch selectable) 47...63 Hz
1769-PB4		24V DC	19.2...31.2V DC
1768-PA3	1768 CompactLogix power supply	120V/220V AC	85...265V AC or 108...132V DC
1768-PB3		24V DC	16.8...31.2V DC

For detailed specifications, see Compact Power Supplies Specifications Technical Data, publication 1769-TD008.

Allen-Bradley, Compact GuardLogix, Compact I/O, CompactBlock Guard I/O, CompactLogix, ControlLogix, FactoryTalk, GuardLogix, Integrated Architecture, Kinetix, Logix5000, PanelView, POINT Guard I/O, POINT I/O, POINTBus, PowerFlex, Rockwell Software, Rockwell Automation, RSLinx, RSLogix, RSNetWorx, SCANport, SoftLogix, Stratix 6000, Stratix 8000, Studio 5000, Studio 5000 Logix Designer, and Ultra are trademarks of Rockwell Automation, Inc.

Trademarks not belonging to Rockwell Automation are property of their respective companies.

www.rockwellautomation.com

Power, Control and Information Solutions Headquarters

Americas: Rockwell Automation, 1201 South Second Street, Milwaukee, WI 53204-2496 USA, Tel: (1) 414.382.2000, Fax: (1) 414.382.4444
Europe/Middle East/Africa: Rockwell Automation NV, Pegasus Park, De Kleetlaan 12a, 1831 Diegem, Belgium, Tel: (32) 2 663 0600, Fax: (32) 2 663 0640
Asia Pacific: Rockwell Automation, Level 14, Core F, Cyberport 3, 100 Cyberport Road, Hong Kong, Tel: (852) 2887 4788, Fax: (852) 2508 1846

Publication 1769-SG001P-EN-P - January 2014
Supersedes Publication 1769-SG001O-EN-P - January 2013

Copyright © 2014 Rockwell Automation, Inc. All rights reserved. Printed in the U.S.A.

CompactLogix Power Supplies Specifications

1768 CompactLogix Power Supplies Catalog Numbers 1768-PA3, 1768-PB3

1769 Compact I/O Power Supplies Catalog Numbers 1769-PA2, 1769-PB2, 1769-PA4, 1769-PB4

Topic	Page
1768 CompactLogix Power Supplies	3
1769 Compact I/O Power Supplies	7

Environmental Specifications - 1768 and 1769 Power Supplies

Attribute	1768-PA3, 1769-PB3 1769-PA2, 1769-PB2, 1769-PA4, 1769-PB4
Temperature, operating IEC 60068-2-1 (Test Ad, Operating Cold), IEC 60068-2-2 (Test Bd, Operating Dry Heat), IEC 60068-2-14 (Test Nb, Operating Thermal Shock)	0…60 °C (32…140 °F)
Temperature, storage IEC 60068-2-1 (Test Ab, Unpackaged Nonoperating Cold), IEC 60068-2-2 (Test Bb, Unpackaged Nonoperating Dry Heat), IEC 60068-2-14 (Test Na, Unpackaged Nonoperating Thermal Shock)	-40…85 °C (-40…185 °F)
Relative humidity IEC 60068-2-30 (Test Db, Unpackaged Nonoperating Damp Heat)	5…95% noncondensing
Vibration IEC 60068-2-6 (Test Fc, Operating)	5 g @ 10…500 Hz
Shock, operating IEC 60068-2-27 (Test Ea, Unpackaged Shock)	30 g
Shock, nonoperating IEC 60068-2-27 (Test Ea, Unpackaged Shock)	50 g

Important User Information

Solid state equipment has operational characteristics differing from those of electromechanical equipment. Safety Guidelines for the Application, Installation and Maintenance of Solid State Controls (publication SGI-1.1 available from your local Rockwell Automation sales office or online at http://www.rockwellautomation.com/literature/) describes some important differences between solid state equipment and hard-wired electromechanical devices. Because of this difference, and also because of the wide variety of uses for solid state equipment, all persons responsible for applying this equipment must satisfy themselves that each intended application of this equipment is acceptable.

In no event will Rockwell Automation, Inc. be responsible or liable for indirect or consequential damages resulting from the use or application of this equipment.

The examples and diagrams in this manual are included solely for illustrative purposes. Because of the many variables and requirements associated with any particular installation, Rockwell Automation, Inc. cannot assume responsibility or liability for actual use based on the examples and diagrams.

No patent liability is assumed by Rockwell Automation, Inc. with respect to use of information, circuits, equipment, or software described in this manual.

Reproduction of the contents of this manual, in whole or in part, without written permission of Rockwell Automation, Inc., is prohibited.

Throughout this manual, when necessary, we use notes to make you aware of safety considerations.

WARNING	Identifies information about practices or circumstances that can cause an explosion in a hazardous environment, which may lead to personal injury or death, property damage, or economic loss.
IMPORTANT	Identifies information that is critical for successful application and understanding of the product.
ATTENTION	Identifies information about practices or circumstances that can lead to personal injury or death, property damage, or economic loss. Attentions help you identify a hazard, avoid a hazard, and recognize the consequence
SHOCK HAZARD	Labels may be on or inside the equipment, for example, a drive or motor, to alert people that dangerous voltage may be present.
BURN HAZARD	Labels may be on or inside the equipment, for example, a drive or motor, to alert people that surfaces may reach dangerous temperatures.

Rockwell Automation, Rockwell Software, Allen-Bradley, TechConnect, Compact I/O, and CompactLogix are trademarks of Rockwell Automation, Inc.

Trademarks not belonging to Rockwell Automation are property of their respective companies.

1768 CompactLogix Power Supplies

The 1768 backplane requires one 1768 power supply. The power supply is a dual input supply that operates in multiple ranges. The power supply also offers a 24V dc external power source. The power supply sends 24V dc to the controller in slot 0.

- The controller converts the 24V dc to 5V dc and 24V dc and distributes it as needed.
  - 5V and 24V power to 1769 I/O modules on the right side of the controller
  - 24V power to 1768 modules on the left side of the controller

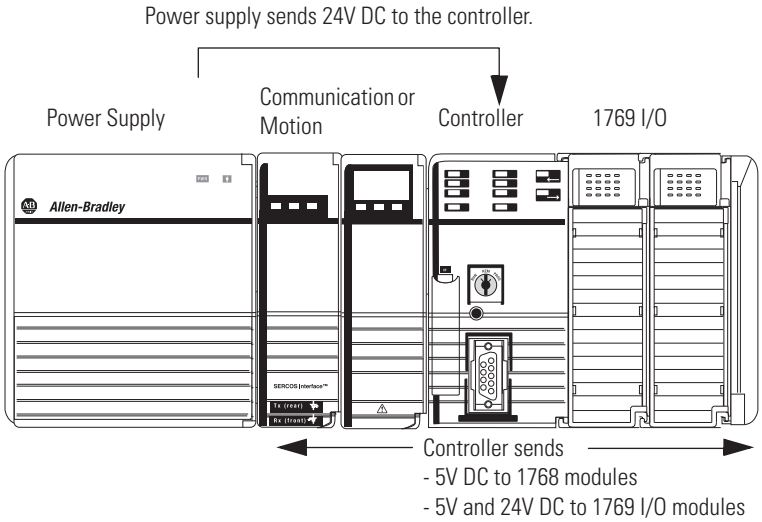

The 1768 modules do not have a distance rating to the 1768 power supply. For the 1769 I/O modules in the 1768 system, the distance rating is from the controller and not the 1768 power supply.

Technical Specifications - 1768 CompactLogix Power Supplies

Attribute	1768-PA3	1768-PB3
Input voltage range	85…265V AC 108…132V DC	16.8...31.2V DC
Input voltage, nom	120V/220V AC	24V DC
Input frequency range	47…63 Hz	DC
Input power, max	120VA/120 W	112 W
Output power, max	90 W 24V DC to backplane: 3.5 24V DC to user-accessible terminal block: 0.25 A	
Output power, min	6 W 24V DC to backplane: 0.25 A 24V DC to user-accessible terminal block: 0.0 A	
Power dissipation	30 W	22 W
Inrush current, max	50 A @ 85…132V AC 80 A @ 195…265V AC	50 A @ 16.8...31.2V DC(1)

Technical Specifications - 1768 CompactLogix Power Supplies

Attribute	1768-PA3	1768-PB3
Isolation voltage	250V, reinforced insulation type, input to system and 24V DC AUX Tested at 4250V DC for 60 s 150V, basic insulation type, 24V DC AUX to system Tested at 2200V dc for 60 s	
Internal overcurrent protection	Non-replaceable fuse is soldered in place	
Recommended external overcurrent protection	4…6 A @ 28.5…36.7 A^2S	8...12 A @ 166...250 A^2S
Overcurrent protection	15 A, user supplied	
Weight, approx.	0.98 kg (2.15 lb)	1.01 kg (2.22 lb)
Dimensions (HxWxD), approx.	131.25 x 132.75 x 105.50 mm (5.17 x 5.23 x 4.15 in.)	
Module location	DIN rail or panel mount	
Mounting screw torque	1.16 N•m (10 lb•in) - use M4 or #8 screws	
Wire category	1 - on power ports[2]	
Wire size, input power terminal	14 AWG (2.5 mm^2) solid or stranded copper wire rated at 75 °C (167 °F) or greater, 1.2 mm (3/64 in.) insulation maximum	
Wire size, output power terminal	14 AWG (2.5 mm^2)…22 AWG (0.25 mm^2) solid or stranded copper wire rated at 75 °C (167 °C) or greater, 1.2 mm (3/64 in.) insulation max	
Conductor screw torque	0.6 N•m (5 lb•in)	
North American temperature code	T4	
Output #1: 24V DC to backplane		
Ride-through interval time, min	25 ms @ 90 W	5 ms @ 90 W
Full power hold-up interval	5 ms @ 90 W	
Extended hold-up interval	8...12 s @ 1.25 W	
Output #2: 24V DC to front panel terminal block		
Voltage	18...27.60V @ front panel	
Output disable	Disable output during hold-up periods	
Enclosure type rating	None (open-style)	

(1) Does not include X-capacitor charging current.

(2) Use this conductor category information for planning conductor routing as described in the system level installation manual. See the Industrial Automation Wiring and Grounding Guidelines, publication 1770-4.1.

Certifications - 1768 CompactLogix Power Supplies

Certification[1]	1768-PA3, 1768-PB3
c-UL-us	UL Listed Industrial Control Equipment, certified for US and Canada. See UL File E65584. UL Listed for Class I, Division 2 Group A,B,C,D Hazardous Locations, certified for U.S. and Canada. See UL File E194810.
CE	European Union 89/336 EEC EMC Directive, compliant with: • EN 50082-2; Industrial Immunity • EN 61326-1; Meas./Control/Lab., Industrial Requirements • EN 61000-6-2; Industrial Immunity • EN 61000-6-4; Industrial Emissions • EN 61131-2; Programmable Controllers (Clause 8, Zone A & B) European Union 73/23/EEC LVD Directive, compliant with: • EN 1010-1; Meas./Control/Lab
C-Tick	Australian Radiocommunications Act, compliant with: AS/NZS CISPR 11; Industrial Emissions

(1) When marked. See the Product Certification link at http://www.ab.com for Declarations of Conformity, Certificates, and other certification details.

Power Requirements and Transformer Sizing - 1768 CompactLogix Power Supplies

1768-PA3 Power Dissipation

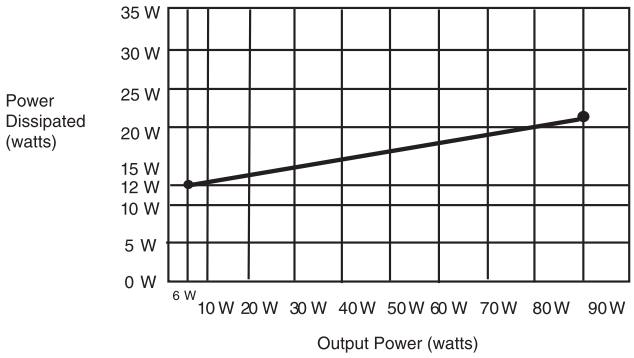

1768-PA3 Input Power Requirements

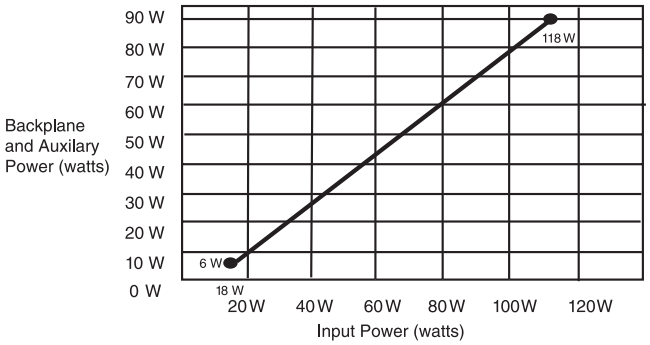

1768-PB3 Power Dissipation

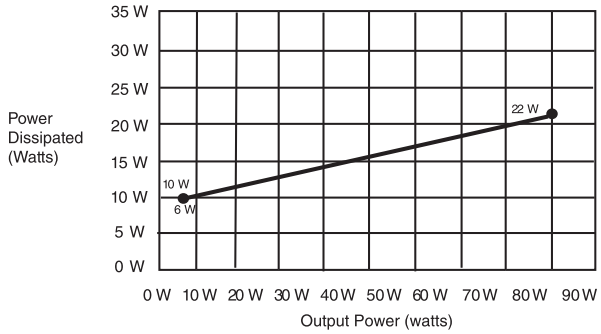

1768-PB3 Input Power Requirements

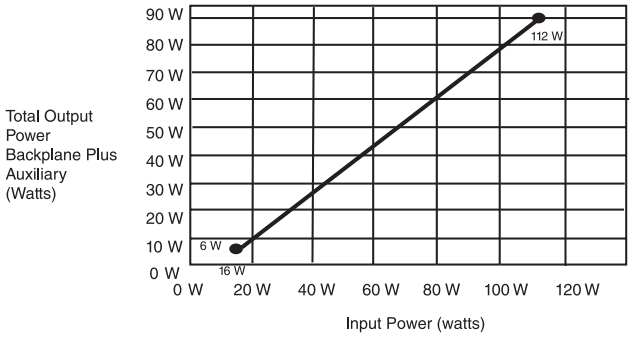

Mounting Dimensions - 1768 CompactLogix Power Supplies

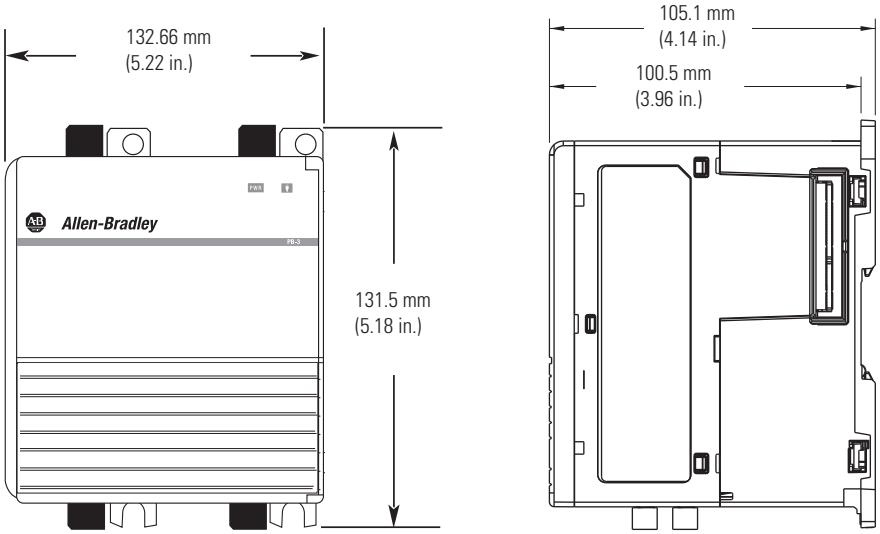

1769 Compact I/O Power Supplies

Each 1769-L3*x* controller and additional bank of I/O modules requires a 1769 power supply. Place 1769 I/O modules to the left or right of the 1769 power supply. As many as eight I/O modules can be placed on each side of the power supply.

Each 1769 module also has a power supply distance rating (the number of modules from the power supply). Each module must be located within its distance rating. See the specifications for the module to determine its distance rating.

Technical Specifications - 1769 Compact I/O Power Supplies

Attribute	1769-PA2	1769-PB2	1769-PA4	1769-PB4
Input voltage range	85…265V AC	19.2...31.2V DC	85…265V AC or 170...265V AC, switch selectable	19.2...31.2V DC
Input voltage, nom	120V/220V AC	24V DC	120V/220V AC	24V DC
Power consumption	100 VA @ 120V AC 130 VA @ 240V AC	50 VA @ 24V DC	200 VA @ 120V AC 240 VA @ 240V AC	100 VA @ 24V DC
Power dissipation	8 W @ 60° C (140° F)	7.5 W @ 60° C (140° F)	18 W @ 60° C (140° F)	14.5 W @ 60° C (140° F)
Current capacity @ 5V	2.0 A	2.0 A	4.0 A	4.0 A
Current capacity @ 24V	0.8 A	0.8 A	2.0 A	2.0 A
Inrush current, max	25 A @ 132V AC	30 A @ 31.2V DC	25 A @ 132V AC	30 A @ 31.2V DC
Isolation voltage	265V (continuous), reinforced insulation type (IEC Class 1 grounding required) Routine tested @ 2596V DC for 1 s, AC power input to system and AC power input to 24V DC user power	75V (continuous), reinforced insulation type (IEC Class 1 grounding required) Routine tested at 1697V DC for 1 s, DC power input to system	265V (continuous), reinforced insulation type (IEC Class 1 grounding required) Routine tested at 2596V DC for 1 s, AC power input to system	75V (continuous), reinforced insulation type (IEC Class 1 grounding required) Routine tested at 1697V DC for 1 s, DC power input to system
Fuse type	Wickmann 19195-3.15A Littelfuse 02183.15MXP	Wickmann 19193-6.3A Littelfuse 021706.3MXP	Wickmann 19195-3.15A Littelfuse 02183.15MXP	Wickmann 19193-6.3A Littelfuse 021706.3MXP
Weight, approx.	525 g (1.16 lb)		630 g (1.39 lb)	
Dimensions (HxWxD), approx.	118 x 70 x 87 mm (4.65 x 2.76 x 3.43 in.)			
Module location	DIN rail or panel mount			
Mounting screw torque	1.16 N•m (10 lb•in) - use M4 or #8 screws			
Power supply distance rating	8 8 I/O modules can be connected on either side of the power supply for a maximum of 16 modules			
Wire category[1]	1 - on power ports	2 - on power ports	1 - on power ports	2 - on power ports
Wire size	14 AWG (2.5 mm^2) solid copper wire rated at 90 °C (194 °F) or greater, 1.2 mm (3/64 in.) insulation max			
North American temperature code	T3C			
IEC temperature code	—	T4	—	T4
Enclosure type rating	None (open-style)			

[1] Use this conductor category information for planning conductor routing as described in the system level installation manual. See the Industrial Automation Wiring and Grounding Guidelines, publication 1770-4.1.

Certifications - 1769 Compact Power Supplies

Certification[1]	1769-PA2, 1769-PA4	1769-PB2, 1769-PB4
c-UL-us	UL Listed for Class 1, Division 2 Group A,B,C,D Hazardous Locations, certified for U.S. and Canada. See UL File E10314	
CE	European Union 2004/108/EC EMC Directive, compliant with: • EN 61000-6-2; Industrial Immunity • EN 61000-6-4; Industrial Emissions	
C-Tick	Australian Radiocommunications Act, compliant with: AS/NZS CISPR 11; Industrial Emissions	
	—	European Union 94/9/EC ATEX Directive, compliant with: • EN 60079-15; Potentially Explosive Atmospheres, Protection “n” (Zone 2) • EN 60079-0; General Requirements (Zone 2)

(1) When marked. See the Product Certification link at http://www.ab.com for Declarations of Conformity, Certificates, and other certification details.

Power Requirements and Transformer Sizing - 1769 CompactLogix Power Supplies

1769-PA2 Output Derating

User +24V Current Draw at 0 A

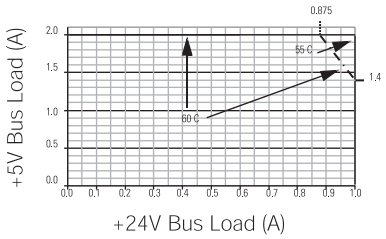

User +24V Current Draw at 0.2 A

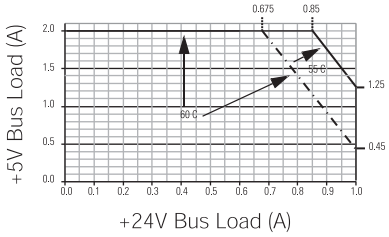

User +24V Current Draw at 0.25 A

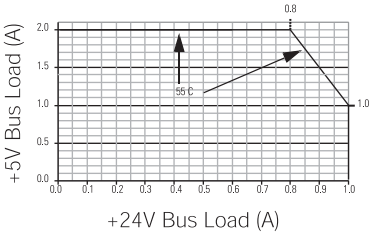

1769-PA2 Power Disspation

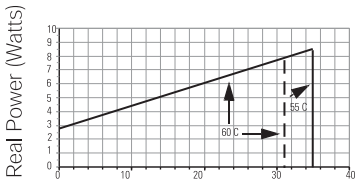

Bus +5V, +24V, and User Load (Watts)

1769-PB2 Output Derating

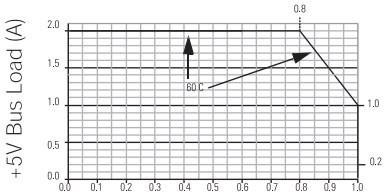

+24V Bus Load (A)

1769-PB2 Power Dissipation

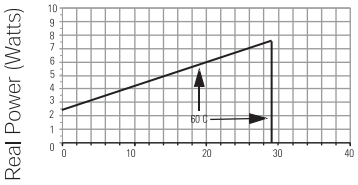

Bus +5V, +24V, and User Load (Watts)

1769-PA4 Output Derating

Total Output: 68 W @ 55 °C (131 °F) or below
61 W @ 60 °C (140 °F) or below

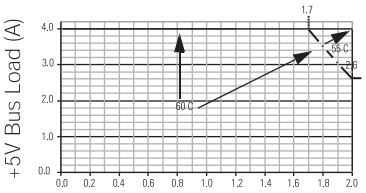

+24V Bus Load (A)

1769-PB4 Output Derating

Total Output: 68 W @ 55 °C (131 °F) or below
61 W @ 60 °C (140 °F) or below

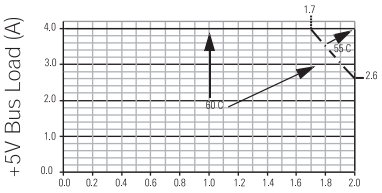

+24V Bus Load (A)

1769-PA4 Power Disspation

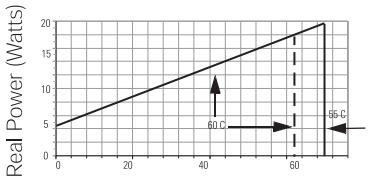

Bus +5V, +24V, and User Load (Watts)

1769-PB4 Power Disspation

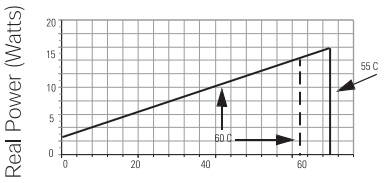

Bus +5V, +24V, and User Load (Watts)

Mounting Dimensions - 1769 CompactLogix Power Supplies

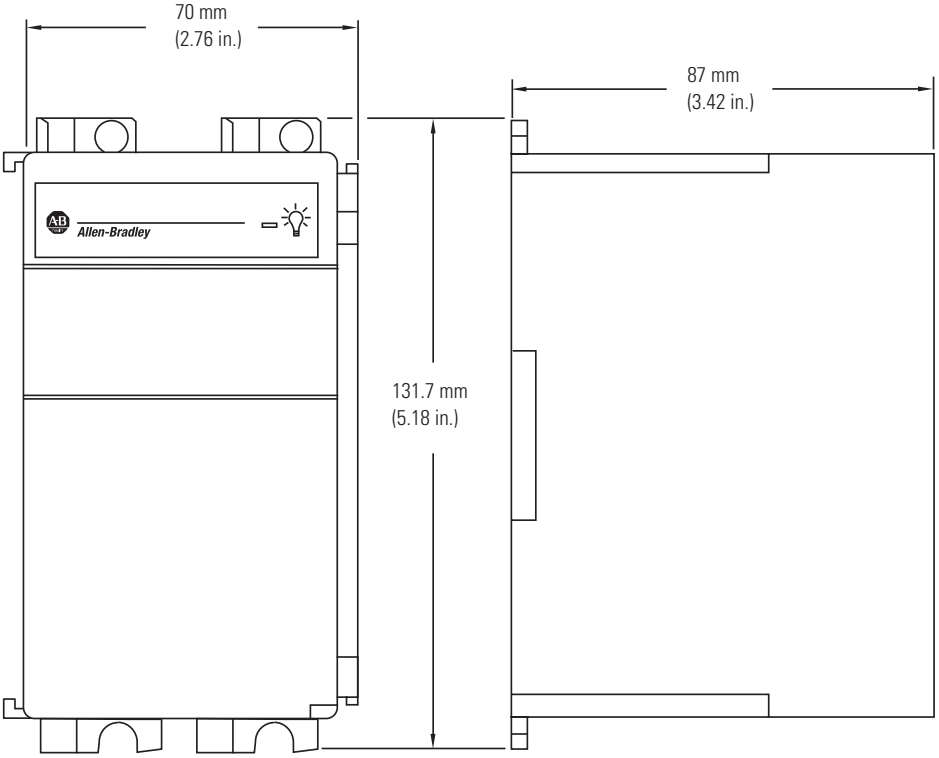

Notes:

Rockwell Automation Support

Rockwell Automation provides technical information on the Web to assist you in using its products. At http://www.rockwellautomation.com/support/, you can find technical manuals, a knowledge base of FAQs, technical and application notes, sample code and links to software service packs, and a MySupport feature that you can customize to make the best use of these tools.

For an additional level of technical phone support for installation, configuration, and troubleshooting, we offer TechConnect support programs. For more information, contact your local distributor or Rockwell Automation representative, or visit http://www.rockwellautomation.com/support/.

Installation Assistance

If you experience an anomoly within the first 24 hours of installation, review the information that is contained in this manual. You can contact Customer Support for initial help in getting your product up and running.

United States or Canada	1.440.646.3434
Outside United States or Canada	Use the Worldwide Locator at http://www.rockwellautomation.com/support/americas/phone_en.html, or contact your local Rockwell Automation representative.

New Product Satisfaction Return

Rockwell Automation tests all of its products to ensure that they are fully operational when shipped from the manufacturing facility. However, if your product is not functioning and needs to be returned, follow these procedures.

United States	Contact your distributor. You must provide a Customer Support case number (call the phone number above to obtain one) to your distributor to complete the return process.
Outside United States	Please contact your local Rockwell Automation representative for the return procedure.

Documentation Feedback

Your comments will help us serve your documentation needs better. If you have any suggestions on how to improve this document, complete this form, publication RA-DU002, available at http://www.rockwellautomation.com/literature/.

www.rockwellautomation.com

Power, Control and Information Solutions Headquarters

Americas: Rockwell Automation, 1201 South Second Street, Milwaukee, WI 53204 USA, Tel: (1) 414.382.2000, Fax: (1) 414.382.4444
Europe/Middle East/Africa: Rockwell Automation, Vorstlaan/Boulevard du Souverain 36, 1170 Brussels, Belgium, Tel: (32) 2 663 0600, Fax: (32) 2 663 0640
Asia Pacific: Rockwell Automation, Level 14, Core F, Cyberport 3, 100 Cyberport Road, Hong Kong, Tel: (852) 2887 4788, Fax: (852) 2508 1846

Publication 1769-TD008A-EN-P - January 2010

Copyright © 2010 Rockwell Automation, Inc. All rights reserved. Printed in the U.S.A.

BOM #12

Product: 1492-GS1G200

Description: 1492-GS High Density Mini Circuit Breakers (Toggle Style)

Representative Photo Only (actual product may vary based on configuration selections)

MINIATURE CIRCUIT BREAKER DATA	
Electrical Standards	UL
Number of Poles	1 pole
Magnetic Trip Range	G-Trip Characteristics - Inductive Loads (AC)
Amp Rating	20.0 A
Optional Auxiliary Contact	No Contact

CERTIFICATIONS AND APPROVALS	
UL	1077, Guide No. QVNU2, File No. E65138
CSA	22.2 NO. 235
EN	60934
CE	Marked
For UL Certifications Directory:	http://database.ul.com/cgi-bin/XYV/template/LISEXT/1FRAME/index.htm

Specifications ❶

Cat. No.	1492-GS
Description	High-density circuit breaker (supplementary protector) with universal mounting foot for Allen-Bradley and DIN rail mounting
Maximum Voltage Ratings	277/480V AC 50/60 Hz 65V DC
Standard Current Ratings Internal Resistance per Pole	A 0.2 0.5 0.8 1.0 1.5 2.0 2.5 3.0 4.0 5.0 6.0 8.0 10.0 12.0 15.0 16.0 20.0 25.0 Ω 26 4.2 1.6 1.1 0.47 0.25 0.20 0.13 0.08 0.06 0.05 0.01 0.01 0.01 0.01 0.01 0.005 0.004
Dielectric Strength	1960V AC
Shock and Vibration Specifications	Shock: 25 G, 11 ms duration Vibration: 5 G (10…500 Hz)
Insulation Resistance	Greater than 100 MΩ @ 500V DC
Current Capacity of Auxiliary Contacts (N.O., N.C.)	1.0 A AC or DC (resistive load)
Voltage Rating of Auxiliary Contacts	277V AC 65V DC
Operating Life	6000 cycles @ rated current (UL 1077)
Temperature Range	–40…+149°F (–40…+65°C)
Wire Size	#22…#10 AWG (0.5…6 mm^2)
Recommended Wire Strip Length	0.51" (13.0 mm) for Mail Terminals 0.41" (10.4 mm) for Auxiliary Terminals
Recommended Tightening Torque	5 lb-in. (0.565 Nm)

❶ Performance Data — See page Important-2.

Approvals

- UL 1077
- CSA 22.2 NO. 235
- VDE 0631 (IEC 60934)

In North America, the Cat. No. 1492-GS circuit breaker is rated as a Supplementary Protector with a short-circuit current rating. Internationally, it is rated by IEC as a Circuit Breaker for Equipment with an interrupt rating

Electrical Characteristics

Poles	Rated Current (A)	Voltage Rating		Short-Circuit Current Rating ❶ Interrupt Rating *I*cn (IEC only)
		AC	DC	
UL 1077 Supplementary Protector Rating				
1	0.2…5	277	—	0.4 kA, U2
1	6…25	277	—	0.7 kA, U2
2, 3	0.2…5	277/480	—	0.4 kA, U2
2, 3	6…25	277/480	—	0.5 kA, U2
1, 2, 3	0.2…5	—	65	0.4 kA, U2
1, 2, 3	6…25	—	65	0.8 kA, U2
1	0.2…16	277	—	5 kA, C1
1	18…25	277	—	2 kA, C1
2, 3	0.2…16	277/480	—	5 kA, C1
2, 3	18…25	277/480	—	2 kA, C1
1	0.2…25	—	65	2 kA, C1
CSA 22.2 #235 Supplementary Protector Ratings				
1	0.2…16	277	—	5 kA, C1
1	18…25	277	—	2 kA, C1
2, 3	0.2…16	277/480	—	5 kA, C1
2, 3	18…25	277/480	—	2 kA, C1
1	0.2…25	—	65	2 kA, C1
IEC 60934 Circuit Breaker for Equipment Ratings				
1	0.2…5	250	—	0.4 kA
1	6…25	250	—	0.8 kA
2, 3	0.2…5	240/415	—	0.4 kA
2, 3	6…25	240/415	—	0.8 kA
1	0.2…5	—	65	0.4 kA
1	6…25	—	65	0.8 kA

❶ The short-circuit current rating is followed by a letter and number designating the test conditions and any calibrations and dielectric tests following the short-circuit test. These designations are defined as follows (see ❷ also):
C — Indicates that the short-circuit test was conducted with series overcurrent protection
U — Indicates that the short-circuit test was conducted without series overcurrent protection
1 — Indicates that a recalibration and dielectric test was not conducted as part of the short-circuit test
2 — Indicates that a recalibration and dielectric test was conducted as part of the short-circuit test

❷ These alphanumeric designations were established by UL. CSA has not yet adopted them; however, the test conditions are equivalent to UL and the coding is appropriate.

BOM #13

COOPER Bussmann

Compact Modular Fuse Holders

COOPER Bussmann

DIN-Rail Mount Fuse Holders Protect Your Electrical System and Simplify Installation

- Colour coded for simple visual identification: yellow for **PV (1000Vdc)**, red for **IEC (690Vac)** and **black** for **UL (600Vac/dc)** applications.
- CHPV Models, with 1000Vdc rating for use with solar gPV fuse links, are suitable for photovoltaic applications of any size.
- Tested to a wide range of standards: IEC, cULus, CCC, CSA and UR, allowing for use across global applications.
- World class space-saving footprint - smaller than any other Modular Fuse Holder, reducing required installation space.
- Toolless DIN-Rail mounting improves ease of use and reduces installation time and costs.
- Rated for use with 75ºC or 90ºC wire, fine stranded wire, spade terminals and with comb-bus bars. Use any higher temperature rated wire with appropriate derating.

For more information visit www.cooperbussmann.com/ModularFuseHolders

Modular Fuse Holder Selection Table (10 x 38, Photovoltaic and Class CC)

Series & Size	Catalogue Number		Rated Voltage & Rated Current	Agency Markings	Number of Poles	Terminal Rating	Rated Breaking Capactiy	Cooper Bussmann Fuse Links
	With Indicator	Without Indicator						
CHM 10x38 and Midget	CHM1DIU	CHM1DU	IEC 690Vac/32A UL 600Vac/30A;	IEC 60269-2 UR; CSA; CCC	1	IEC: 1 to 25mm² 70°C PVC/Copper Cable Solid, Stranded, Fine Stranded, Spade Lug, Comb Bus Bar; Single and Dual	IEC 120kA rms sym UL 200kA rms sym CCC 100kA rms sym	IEC: C10 Series UL: FNQ, KLM, FNM, KTK, BAF, FWA, PVM, AGU, BAN, FWC.
	CHM2DIU	CHM2DU			2			
	CHM3DIU	CHM3DU			3			
	CHM4DIU	CHM4DU			4			
	CHM1DNIU	CHM1DNU		IEC 60269-2	1-pole + 1 neutral			
	CHM3DNIU	CHM3DNU			3-pole + 1 neutral			
	CHM1DI-48U	N/A	IEC 48Vdc/32A UL 48Vdc/30A;	IEC 60269-2; UR; CSA; CCC	1			
	N/A	CHM1DNXU	IEC 690Vac/32A	IEC 60269-2	1 neutral		N/A	N/A
CHPV Photovoltaic	CHPV1IU	CHPV1U	IEC 1000Vdc/32A UL 1000Vdc/30A;	IEC 60269-1 UR; CSA; CCC UL4248-18	1		33kA	Solar PV series, PVM, PV-xxA10F
	CHPV2IU	CHPV2U			2			
CHCC Class CC	CHCC1DIU	CHCC1DU	UL 600Vac/dc 30A	UL; CSA; CCC	1	Cable 75°C and 90°C Cu cable	200kA rms sym	LP-CC, FNQ-R, KTK-R
	CHCC2DIU	CHCC2DU			2			
	CHCC3DIU	CHCC3DU			3			
	N/A	CHCC1DI-48U	UL 48Vdc/30A		1			

Features

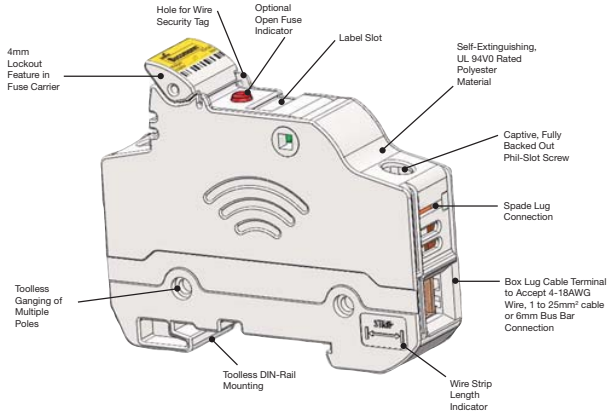

Specifications

Temperature Operating Range:
- -20°C to +120°C (non-indicating)
- -20°C to +90°C (indicating)

Flammability: Self-extinguishable UL 94V0 rated

Comb Bus Bar & Power Feed Accessories Make Installation Easier

- Distributes power in single- or three-phase configurations
- Cut-to-length solution does not compromise finger-safe protection
- Single-phase bus bars rated to 1000Vdc and 100A in end-fed configuration (200A for center-fed configuration)
- Three-phase bus bars rated to 600Vac/dc and 100A in end-fed configuration (200A for center-fed configuration)
- Power feed terminals for single-phase and three-phase service

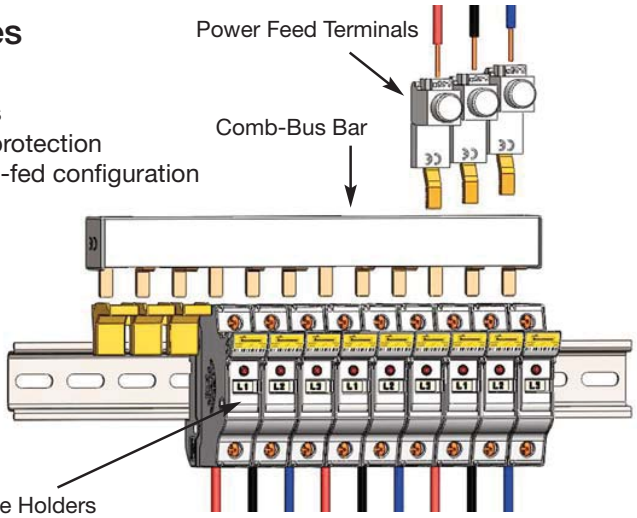

© 2012 Cooper Bussmann
www.cooperbussmann.com

COOPER Bussmann

Transient Voltage Surge Suppression Limiters TVSS

Time-Current Characteristic Curves–Average Melt

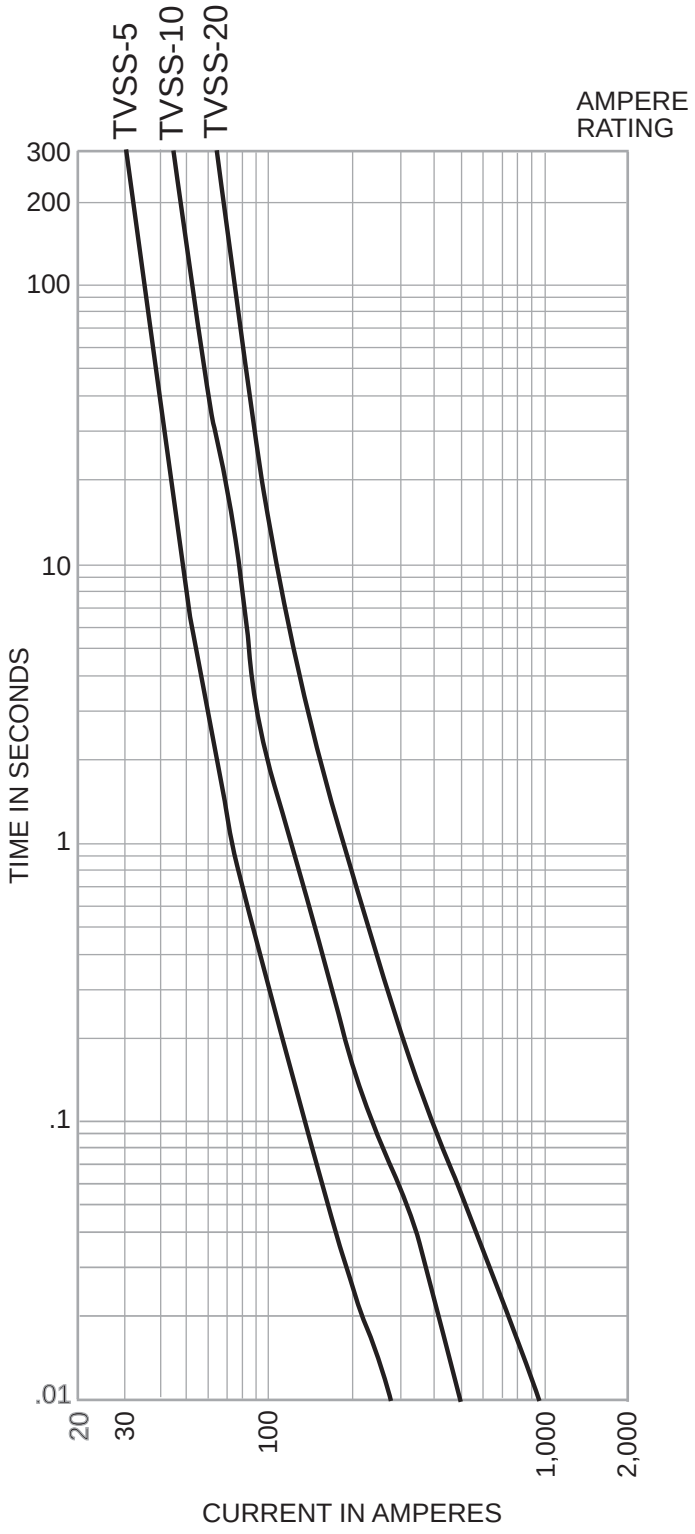

Time-Current Characteristic Curves–Peak Let-Through

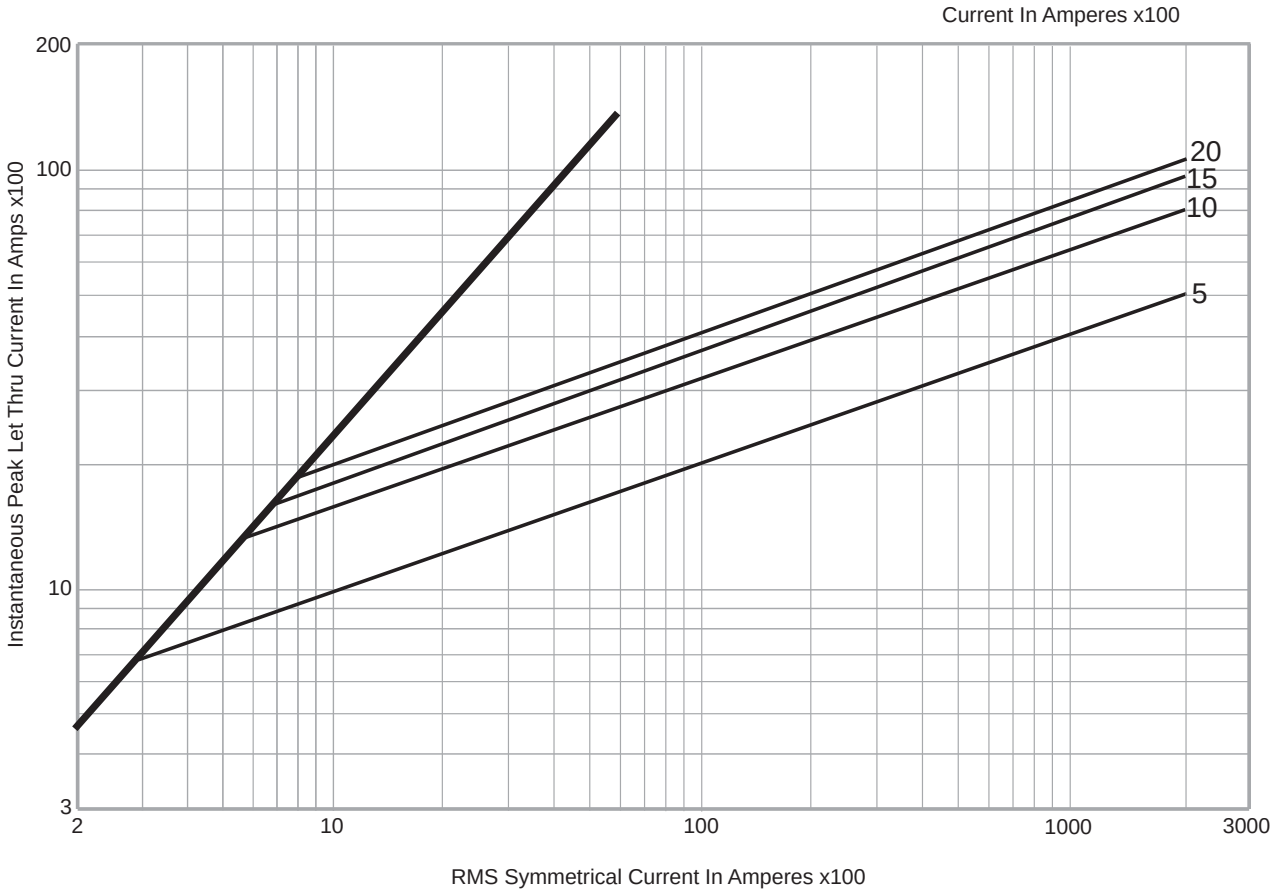

The only controlled copy of this Data Sheet is the electronic read-only version located on the Bussmann Network Drive. All other copies of this document are by definition uncontrolled. This bulletin is intended to clearly present comprehensive product data and provide technical information that will help the end user with design applications. Bussmann reserves the right, without notice, to change design or construction of any products and to discontinue or limit distribution of any products. Bussmann also reserves the right to change or update, without notice, any technical information contained in this bulletin. Once a product has been selected, it should be tested by the user in all possible applications.

DIN-Rail TVS Series

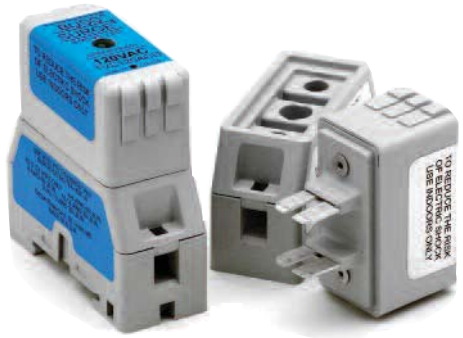

Status LED

OFF - Suppressor Non-Operational (power may be on)
GREEN - Suppressor Operational (power on)

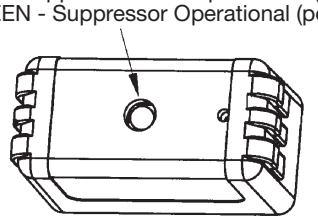

Specifications

Description: DIN-Rail mount voltage surge protection system for AC or DC voltage using diode or MOV technology.

Construction:

Suppressor: Case: 20% glass filled PES (Polyethersulfone)
Terminals: 110 Copper
Terminal Plating: Electroless tin

Holder: Case: 15% glass filled PBT (Polybutylene Terephthalate)
Interface Clips: CDA 7025
Interface Clip Plating: Electroless tin
Contact Lubricant: Fluoroether grease
Box Lug: Copper
DIN-Rail Springs: Stainless steel

Ratings*:

Volts: — 12Vdc (2kA surge current)
— 24Vdc (2kA surge current)
— 48Vdc (2kA surge current)
— 120Vac (7kA-18kA surge current)
— 240Vac (7kA-18kA surge current)

* See Catalog Numbers table for all specifications pertaining to specific voltage ratings.

Agency Information: UL Recognized (UL 1449) for AC products, (UL 497B) for DC products, CSA Approved.

Dimensions -in

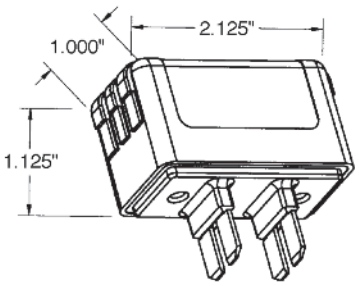

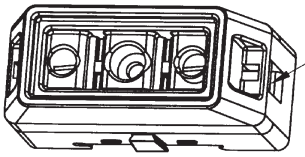

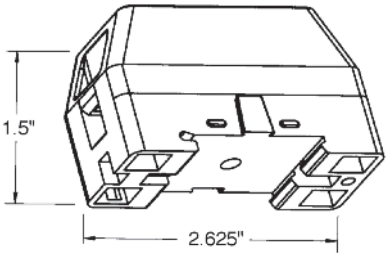

Product Specifications:

1. All TVS devices have non-polarized electrical connections as shown.
2. Suppressor voltage characteristics per chart.
3. Suppressor to provide non-interrupted service.
4. Enclosure material is 94V0 flame and explosion resistant.
5. Product markings show manufacturer, part number and safety warnings as required.
6. Mechanical dimensions as noted.
7. Suppressor Status LED as shown.
8. AC units operate on either 50 or 60Hz.

Catalog Numbers

Catalog Numbers	Voltage Application	MCOV	Technology	SVR 500A, 8x20µs	Surge Current Rating	Agency Information	Label Color
TVS12DCD	12Vdc	14Vdc	SASD	36Vdc	2kA	UL 497B	Red
TVS24DCD	24Vdc	28Vdc	SASD	58Vdc	2kA	UL 497B	White
TVS48DCD	48Vdc	57Vdc	SASD	90Vdc	2kA	UL 497B	Black
TVS120ACD	120Vac	140Vac	SASD	330Vac	7kA	UL 1449	Blue
TVS120ACM	120Vac	140Vac	MOV	500Vac	18kA	UL 1449	Grey
TVS240ACD	240Vac	280Vac	SASD	600Vac	7kA	UL 1449	Blue
TVS240ACM	240Vac	280Vac	MOV	800Vac	18kA	UL 1449	Grey

Data Sheet: 9006

BOM #15

Product: 1492-GH100

Description: 1492-GH High Density Mini Circuit Breakers (Push to Set)

Representative Photo Only (actual product may vary based on configuration selections)

MINIATURE CIRCUIT BREAKER DATA	
Electrical Standards	UL
Amp Rating	10.0 A

CERTIFICATIONS AND APPROVALS	
UL	1077, Guide No. QVNU2, File No. E65138
CSA	22.2 NO. 235
VDE	0631 (EN 60934)
CE	Marked
For UL Certifications Directory:	http://database.ul.com/cgi-bin/XYV/template/LISEXT/1FRAME/index.htm

BOM #16

SOLAHD

Dry Contact Relay Kit

RELAYCARD-SDU

Instruction Manual

While every precaution has been taken to ensure accuracy and completeness in this manual, SolaHD assumes no responsibility, and disclaims all liability for damages resulting from use of this information or for any errors or omissions.

©2009 SolaHD. All rights reserved throughout the world. Specifications are subject to change without notice.

®SolaHD name and logo are registered trademarks of EGS Electrical Group, LLC. All names referred to are trademarks or registered trademarks of their respective owners.

Table of Contents

What's Included 4

Installation 4

Product Description 5–6

Notes 7

What's Included

- One dry contact relay box
- One interface cable (DB-9 connector)
- One 12 V dc power interconnection cable
- Four M3 mounting screws

Installation

⚠ DANGER **Only qualified personnel should install or service this system. Electrical safety precautions must be followed when installing or servicing this equipment. To prevent risk of electrical shock, turn off and lock out all power sources to the unit before making electrical connections.**

1. Using the four M3 screws provided, mount the dry relay box on the right side of the SDU UPS. If mounting on a separate chassis, the hole diameter for the relay box is 0.378 in. (3.5 mm).

2. Plug the 12 V dc power interconnection cable into the 12 V dc input of the relay box. Plug the other end of the power interconnection cable into the aux dc output (or Vout) of the SDU UPS.

3. Plug the DB-9 connector cable into the RS232 communication port of the SDU UPS. Plug the other end of the connector into the remote port of the dry contact relay.

Product Description

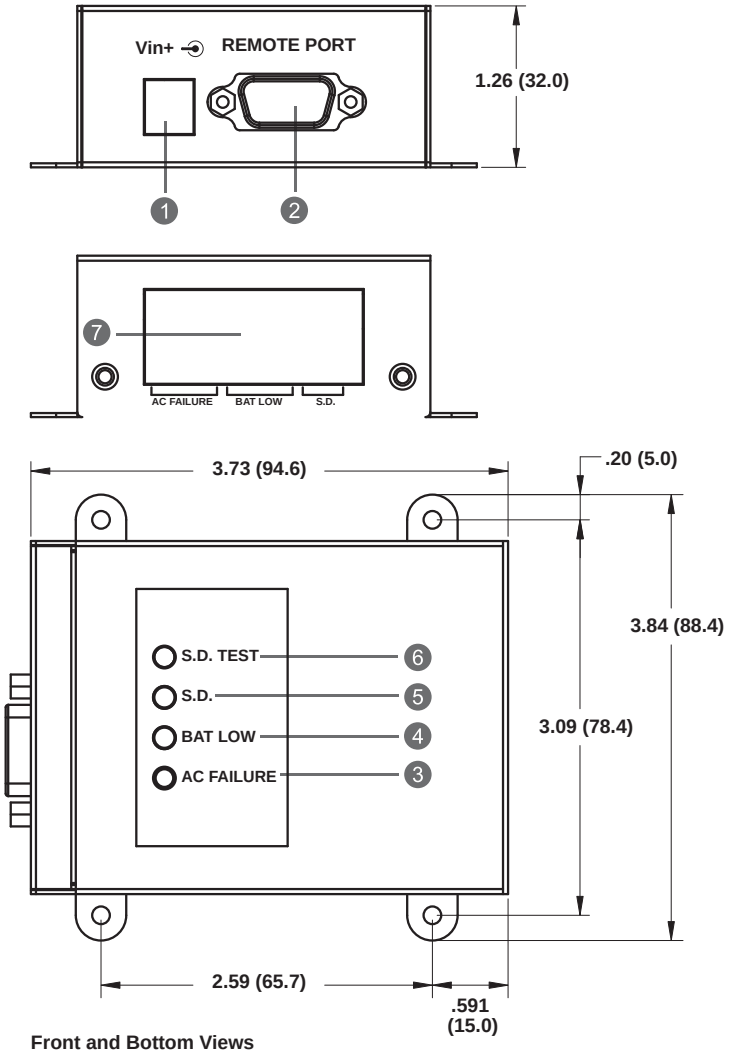

Front and Bottom Views
All dimensions are in inches (mm)

1. **Vin:** Input connector used to provide the dry contact relay with 12 V dc input power.
2. **Remote Port:** This communication port is used for linking to the SDU UPS.

   NOTE: The provided connection cable is used only for this dry contact relay.
3. **Ac Failure Indicator:** This yellow LED is illuminated when ac voltage is abnormal.
4. **Battery Low Indicator:** This green LED is illuminated when battery capacity is low.
5. **Shut Down Indicator (S.D.):** When the dry contact relay receives the shut down signal for 1 second, the red LED is illuminated and the SDU UPS goes into shut down mode.

Product Description continued from page 5

6. Shut Down Test Button (S.D. Test): Provides the dry contact relay a shut down signal to test the shut down function when the UPS is operating in the battery mode. Push this button for 1 second and the red LED is illuminated. The SDU UPS goes into shut down mode after 3 minutes.

7. 8 Pole Terminal Blocks

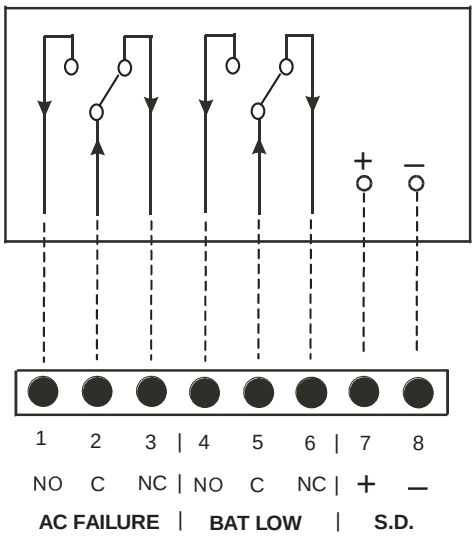

Table 1: Terminal Blocks—Layout and Operation

+UPS State		External Input	DCB LED Display			Terminal Blocks			
O = Occur X = Does not occur		O = Enable X = Disable	O = LED On X = LED Off			O = Close X = Open			
Ac Failure	BAT Low	S.D.	Yellow	Green	Red	Pin 1–2	Pin 2–3	Pin 4–5	Pin 5–6
X	X	X	X	X	X	X	O	X	O
O	X	X	O	X	X	O	X	X	O
O	O	X	X	O	X	O	X	O	X
O	X	O	X	X	O	X	O	X	O

Notes

1. Suitable electric wire = AWG 22–12 (IEC 2.5 mm).

2. Contact maximum current = 1.0 A @ 250 V ac.

3. Shut down input signal (range = +5 V to +12 V) can be provided by enabling terminals 7 and 8 for remote shut down control, assured by an external remote device.

Technical Support
U.S.: (800) 377-4384
International: (847) 268-6000
E-mail: www.tech@solahd.com
Web site: www.solahd.com

Part Number: A272-081 Rev 7
May 20, 2009

BOM #17

SOLAHD

SDU Series, DIN Rail AC UPS

The SDU DIN Rail UPS combines an industry leading compact design with a wide operation temperature range and unique installation options. The SDU series provides economical protection from damaging impulses and power interruptions. These units include easy to wire screw terminations for critical devices needing battery back up such as computer based control systems.

E179213

Applications

- Programmable Logic Controllers
- Factory Automation
- Robotics
- Conveying Equipment
- Computer-based Control Systems

Features

- Lightweight, compact industrial design
- Wide operation temperature range (0ºC to 50ºC)
- Cold start capability
- Phone/dataline surge protection
- Software and cable included for easy installation
- Simulated sinewave output
- RS232 communication port
- USB communication port (optional)
- Form C dry contact relay (optional)
- Panel/wall mounting brackets (optional)
- Remote turn-on and shut-off capabilities
- Two year limited warranty

Certifications and Compliances

120V Models

- c UL us UL Recognized Component, UPS Equipment
  - UL 60950-1/CSA C22.2 No. 60950-1
  - Suitable for UL 508, CSA C22.2 No. 107.1 Ind. Control Equipment Applications with no derating
    - Overvoltage Cat III, Pollution Degree III

230V Models

- CE
  - EN62040-1-1

Related Products

- Portable MCR Power Conditioners
- STV Surge Protective Devices
- SDN DIN Rail Power Supplies
- STFV Plus Active Tracking® Filters

Selection Table

Capacity (VA/W)	Catalog Number	Volts, Frequency In/Out	Typical Back–up Time (minutes) *	Input/Output Connections	Approx. Ship Weight – lbs (kg)
500/300	**SDU 500**	120 Vac, 50/60 Hz	4	IP20 touch proof, screw terminals. Wire range: 10 ~ 24 AWG.	10.7 (4.70)
850/510	**SDU 850**		2		11.4 (5.00)
500/300	**SDU 500–5**	230 Vac, 50/60 Hz	4		11.5 (5.20)
850/510	**SDU 850–5**		2		11.9 (5.40)

* At full load.

SDU Accessories

Catalog Number	Description	Approx. Ship Weight – lbs (kg)
RELAYCARD–SDU	Dry contact I/O relay box, IP20 touch proof screw terminals, wire size range 12~22 AWG (IEC 2.5mm); N.O./N.C. form "C" contact. Relay contact signal for "On Battery", "Low Battery" and "UPS Shutdown".	1.0 (0.45)
UPSMON–USB	RS232 to USB adapter cable	1.0 (0.45)
SDU–PMBRK	Mounting brackets to secure UPS to wall, back of panel or enclosure.	1.0 (0.45)

Specifications

Catalog Number	SDU 500	SDU 850	SDU 500–5	SDU 850–5
Capacity (VA/Watts)	500/300	850/510	500/300	850/510
Load Power Factor	0.6			
Dimensions – inches (mm)				
Unit (H x W x D) – in. (mm)	4.88 x 11.1 x 4.55 (124.0 x 281.0 x 116.0)			
Weight – lbs (kg)	10.7 (4.70)	11.4 (5.00)	11.5 (5.20)	11.9 (5.40)
Input Parameters				
Voltage	120 V (+10%, -20%)		230 V (+/- 20%)	
Frequency	50 +/- 5 Hz or 60 Hz +/- 6 Hz (auto sensing)			
Output AC Parameters				
Voltage (Battery Mode)	Step sinewave			
	+/- 5%			
Frequency (On Battery)	50 or 60 Hz			
	+/- 0.3 Hz			
Overload Protection	UPS automatic shutdown if overload exceeds 105% of nominal at 20 seconds, 120% at 10 seconds, 130% at 3 seconds			
Short Circuit	UPS output cut off immediately			
Battery Parameters				
Battery Type	Sealed, non-spillable, maintenance-free lead acid batteries			
Transfer Time	4 - 6 ms typical			
Back–up Time * (minutes)	4.5/18	2.5/10	4.5/18	2.5/10
Recharge Time	8 hours to 90% capacity after full discharge			
Environmental				
Operating Temperature	0°C to 50°C			
Storage Temperature	-15°C to 60°C			
Relative Humidity	1% to 95%, non-condensing			
Ambient Operation	1-95% humidity non-condensing, 0-50°C up to 5,000 ft. (1500m)			
Audible Noise	< 40dBA (1 meter from surface)			
Standards				
EMC	FCC Part 15, Subpart B, Class A; EMC: EN50091-2, EN61000-3-2, EN61000-3-3, IEC60801-2, IEC60801-3, IEC60801-4, IEC61000-2-2			
Elevation	5000 ft. without derating			
Shock & Vibration	According to the International Safe Transit Association standard ISTA 2A.			
Mounting	To be mounted on DIN TS35/7.5 or TS35/15 rail system. Chassis mounting permissible via optional brackets. Unit handles normal shock and vibration of industrial use and transportation without coming off rail.			

* At full load/half load.

BOM #19
TAGS: LSHY-4001
LSHY-4002
LSHY-5001
LSHY-5002
LSHY-6001
LSHY-7001
LSHY-7002

Warrick

Series 16DM

Series 16DM DPDT Load Contact, Solid State Plug-In Module

Part No. 16DMB1B0
Unit Price $267
Lead Time (Days) 5

Image is of actual product

Model	16DM
Mode of Operation	Direct
Sensitivity	10 K
Control Style	Plug-In Module
Socket Style	DIN Mount
Standoff Style	N/A
Enclosure	None
Contact Design	2 Normally Open & 2 Normally Closed (non-powered)
Contact Rating	5 Amp Resistive 1/10 horse power
Secondary Voltage	12 VAC
Terminal Style	Screw Connector
Number of Channels	1
Minimum Temperature (°F)	-40
Maximum Temperature (°F)	150
Protection	Non-Intrinsically Safe
Approvals	UL 508 General Purpose
Minimum Qty (per Release)	1
Weight (Lbs)	1.1

Options

Warrick® Series 16DM Controls

Installation and Operation Bulletin

This bulletin should be used by experienced personnel as a guide to the installation of series 16DM controls. Selection or installation of equipment should always be accompanied by competent technical assistance. We encourage you to contact Gems Sensors Inc. or its representative if further information is required.

	Specifications
Control Design:	Solid-State components enclosed in clear Lexan plug-in style housing. Housing carries no NEMA rating
Contact Design:	2 SPDT (2 form C): Two Normally Open (N.O.) and two Normally Closed (N.C.), non-powered contacts
Contact Ratings:	5 A @ 120, 240 VAC resistive, 1/8 H.P. @ 120 or 240 VAC
Contact Life:	Mechanical: 5 million operations - Electrical: 100,000 operations minimum at rated load
Supply Voltage	24, 120, or 240 VAC Models - Factory Set. Plus 10%, minus 15%, 50/60 Hz
Supply Current:	120, 240, 24 VAC, Relay energized 4.4 VA
Secondary	12 VAC RMS Voltage on probes. 1.5 milli-amp Current
Circuit:	Models operate from 0 to 1,000,000 OHM maximum
Sensitivity:	specific resistance - Factory set
	-40° To 150°F Ambient
Temperature:	All connections #6-32 screw type with pressure clamps
Terminals:	Standard, 0.5 seconds on rising level.
Time Delays:	Additional time delays on rising and/or falling level available as option.
Listings:	U.L. Listing, Industrial Motor Control (508). 240 and 208 volt units are not U.L. limit control recognized.

Installation

1. Install octal socket in appropriate enclosure using two #6 or #8 metal screws.
   a) Install rail mount socket on appropriate rail (DIN mount) in appropriate enclosure, if applicable.
2. Wire control per wiring diagram, following N.E.C. and local codes.
3. Install control module in socket.

Sensitivities vs Maximum Probe Wire Distance*

Sensitivity Character	Sensitivity (K Ohms)	Distance (Ft.)
A or K	4.7	10,000
B or L	10	5,700
C or M	26	2,200
D or N	50	1,075
E or P	100	570
F or R	470	270
G or S	1,000	38

* Based on type MTW or THHN wire, #14 or #16 Awg

Dimensions

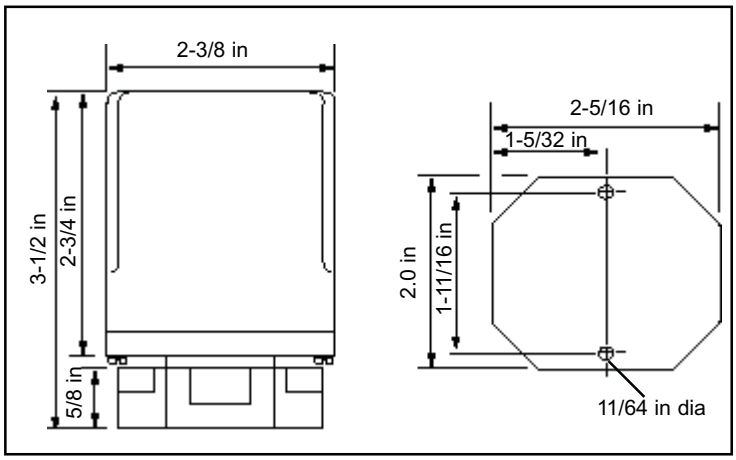

Use copper (60/70° C) wire only. Torque to 20 inch pounds.

Wiring Diagram

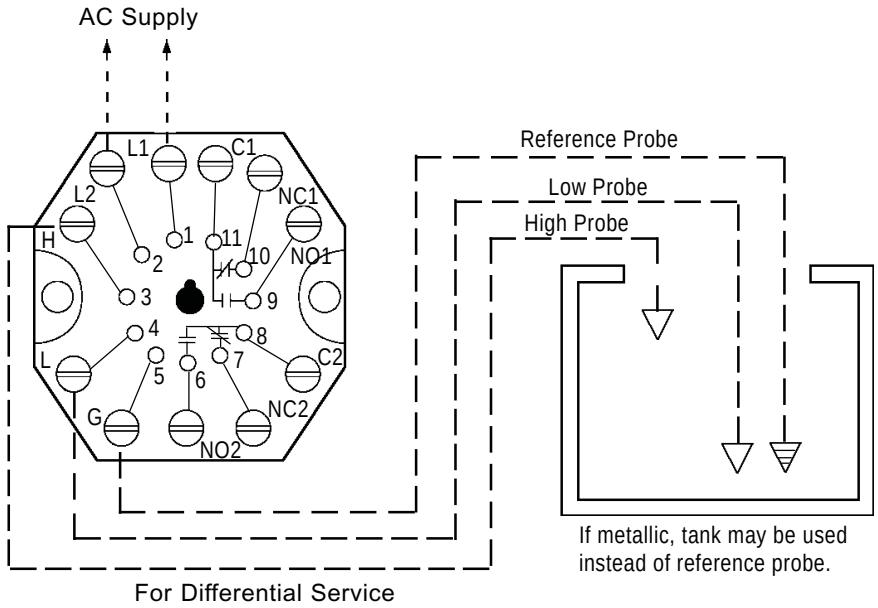

Note: For Single Level Service, use "H" and "G" Connections

Operation

Direct Mode - Single Level Service:
When the liquid rises to the electrode on terminal 3, the control energizes, changing state of the load contacts. **(LED will be lit)** The control remains energized until the liquid level recedes below electrode on terminal 3. The control then de-energizes, **(LED will not be lit)** returning load to original state.

Inverse Mode - Single Level Service:
Control energizes with power, changing state of the load contacts. **(LED will be lit)** When the liquid rises to the electrode on terminal 3, the control de-energizes, returning the load contacts to shelf state. **(LED will not be lit)** The control remains de-energized until liquid level recedes below the electrode connected to terminal 3. The control then energizes.

Direct Mode - Differential Service:
When the liquid rises to the electrode on terminal 3, the control energizes, changing state of the load contacts. **(LED will be lit)** The control remains energized until the liquid level recedes below electrode on terminal 4. The control then de-energizes, **(LED will not be lit)** returning the load contacts to original state.

Inverse Mode - Differential Service:
Control energizes with power, **(LED will be lit)** changing state of the load contacts. When the liquid rises to the electrode on terminal 3, the control de-energizes, returning load contacts to shelf state. **(LED will not be lit)** The control remains de-energized until the liquid level recedes below the electrode on terminal 4. The control then energizes.

Optional

Time Delays: With time delay on increasing level, the liquid must be in contact with the short electrode for the full duration of the time delay before control will operate. With delay on decreasing level, the liquid must be below long electrode for the full duration of the time delay before control will operate. In single level service, terminals 3 and 4 must be jumpered together to achieve time delays on both increasing and decreasing levels or just decreasing level.

16DM B 1 B **-XX-XX**

- ~~**Time Delay:** (decreasing level) 1-20 sec.~~
- ~~**Time Delay:** (increasing level) 1-20 sec.~~
- ~~**Enclosure:** 0-none, 1-NEMA 1, 4-NEMA 4, 7-NEMA 7, 12-NEMA 12~~
- **Socket Style:** A - 11 Pin Octal, B - 11 Pin DIN Mount, M - None, Module Only
- **Supply Voltage:** 1- 120 VAC, 2- 240 VAC, 3- 24 VAC, 8- 208/240 VAC*
- **Mode/Sensitivity:**
  - **Direct** A- 4.7K, B- 10K, C- 26K, D- 50K, E- 100K, F- 470K, G- 1M
  - **Inverse** K- 4.7K, L- 10K, M- 26K, N- 50K, P- 100K, R- 470K, S- 1M

*187 Vmin to 255 Vmax VAC

Gems Sensors Inc.
One Cowles Road
Plainville, CT 06062-1198
Tel: 860-793-4579
Fax: 860-793-4580

BOM #21

Product: 700-HK32A1

Description: 700-HK General Purpose Slim Line Relay

Representative Photo Only
(actual product may vary based on configuration selections)

CONTROL RELAY DATA

Contact Rating	8 Amp Contact (Slim Line Relay)
Contact Configuration	DPDT Contact Arrangement
Coil Voltage	120V 50/60Hz
Relay Option	No Additional Options

CERTIFICATIONS AND APPROVALS

CE	Marked
UL	Listed with socket, Guide No. NLDX, File No. E3125
UR	Recognized, Guide No. NLDX2, File No. E3125
CSA	
For UL Certifications Directory:	http://database.ul.com/cgi-bin/XYV/template/LISEXT/1FRAME/index.htm

		Cat. No. 700-HK...			
Electrical Ratings					
Rated Thermal Current (I^{th})		1-Pole, 1 CO, SPDT — 16 A		2-Pole, 2 CO, DPDT — 8 A	
Rated Insulation Voltage (U_i)		250V IEC, 300V UL/CSA			
Contacts	Inductive V AC	120V AC	AC-15, 6.2 A B300 Pilot Duty, 3 A A300 (700-HKM_) 1/3 Hp (0.24 kW) 1-phase	120V AC	AC-15, 2.9 A B300 Pilot Duty, 3.0 A 1/4 Hp (0.18 kW), 1-phase
		240V AC	AC-15, 3.1 A B300 Pilot Duty, 1.5 A A300 (700-HKM_) 3/4 Hp (0.55 kW), 1-phase	240V AC	AC-15, 1.4 A B300 Pilot Duty, 1.5 A 1/2 Hp (0.37 kW), 1-phase
		230V AC	0.55 kW, 1-phase	230V AC	0.37 kW, 1-phase
	Inductive V DC	24V DC	DC-13, 5.0 A	24V DC	DC-13, 3.0 A
		125V DC	DC-13, 0.2 A R300 Pilot Duty, 0.22 A	125V DC	DC-13, 0.2 A R300 Pilot Duty, 0.22 A
		250V DC	DC-13, 0.1 A R300 Pilot Duty, 0.11 A	5 A, 250V AC	DC-13, 0.1 A R300 Pilot Duty, 0.11 A
	Resisitive	230V AC	AC-1, 16 A	230V AC	AC-1, 8 A
		277V AC	16 A, General Use	277V AC	8 A, General Use
	Make, Break & Continuous	30V DC	DC-1, 12 A 10 A, Resistive	30V DC	DC-1, 6 A 6 A, Resistive
Min. Permissible Contact Ratings		300 mW (5V/60 mA or 60V/5 mA) for AgNi Contacts (700-HK3_) 50 mW (5V/10 mA or 25V/2 mA) for AgNi + Gold Contacts (700-HKX_) 500 mW (100V/5 mA or 5V/100 mA) for $AgSnO_2$ Contacts (700-HKM_)			
Permissible Coil Voltage Variation	Pickup: holding Voltage: Must Dropout Voltage:	80...110% of Nominal Voltage at 50/60 Hz, 73...110% of Nominal Voltage at DC 80% of Nominal V AC at 50/60 Hz, 40% of Nominal V DC 20% of Nominal V AC at 50/60 Hz, 10% Nominal V DC			
Power Consumption		1.2V A (V AC Coils), 0.5 W (V DC Coils)			
Coil Voltages		See Overview/Product Selection			
Design Specification/Test Requirements					
Dielectric Withstand Voltage	Between Open Contacts (VRMS)	1000V AC			
	Contact to Coil (VRMS)	1600V AC			
Mechanical					
Degree of Protection		IP 20 (guarded terminal sockets), RT II — Flux-proof (Relay)			
Mechanical Life Operations		10 x 10^6			
Electrical Life Cycles		230V AC, 16 A Resistive: 100 000 min. 277V AC, 16 A Resistive: 30 000 min. 30V DC, 10 A Resisitive: 30 000 min. B300, R300, Hp (kW): 6000 min. A300 (700-HKM_): 100,000 min.		230V AC, 8 A Resistive: 100 000 min. 277V AC, 8 A Resistive: 30 000 min. 30V DC, 6 A Resistive: 30 000 min. B300, R300, Hp (kW): 6000 min.	
Switching Frequency		Mechanical: 18,000 cycles/hr. Electrical: 900 cycles/hr.			
Operating Time at Nominal Voltage at 20 °C (ms)	Pickup	15 ms max.			
	Dropout	5 ms max.			
Vibration	Operational	10...2000 Hz, 0.76 mm (0.03 in.) 2.5 G			
	Non-Operational	10...2000 Hz, 0.76 mm (0.03 in.) 5.0 G			
Shock	Operational	15 G			
	Non-Operational	50 G			
Environmental					
Temperature	Operating	–40...+70 °C (–40...+158 °F)			
	Storage	–40...+85 °C (–40...+185 °F)			
Altitude		2000 m (6560 ft)			
Construction					
Insulating Material		Molded High Dielectric Material			
Enclosure		Transparent Dust Cover			
Contact Material		700-HK3_: Silver nickel (AgNi); 700-HKX_: Silver Nickel + Gold Plating (AgNi + Au); 700-HKM_: Silver Tin Oxide ($AgSnO_2$)			
Terminal Markings on Socket		In accordance with EN 50005			
Sockets		**1-Pole**		**2-Pole**	
	Screw Terminal	700-HN121 (10 A @ 70 °C) 700-HN221 (16 A @ 50 °C, 12 A @ 70 °C)		700-HN122 (2 x 5 A @ 70 °C) 700-HN222 (2 x 8 A @ 70 °C)	
	Spring Clamp (Available September 2006)	700-HN223 (15 A @ 40 °C with 2 conductors per terminal) (10 A @ 70 °C with 1 conductor per terminal)		700-HN224 (2 x 8 A@ 70 °C)	
Approvals					
Certifications		CSA Certified, File 75088, UL Recognized, File E3125 Guide NLDX2/NLCX8, cULus Listed with Allen-Bradley sockets (File No. 3125 Guide NLDX/NLDX7), CE Marked			
Standards		EN61810-1, CSA 22.2 No. 14, UL 508			

http://raise.rockwellautomation.com/raconfig/rtcache/jpg/700-hk%20specs.jpg[10/7/2015 4:14:36 PM]

BOM #22 and 23

Spring-Clamp Connection Terminal Blocks

Plug-in Style Blocks (Cat. Nos. 1492-L3P, -LDG3P) and Analog Loop Control Block (Cat. No. 1492-LDAG3)

	1492-L3P			1492-LDG3P			1492-LDAG3		
Dimensions are not intended to be used for manufacturing purposes. **Note:** Height dimension is measured from top of rail to top of terminal block.	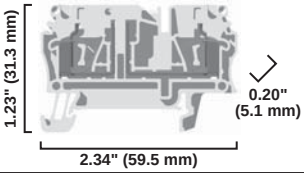			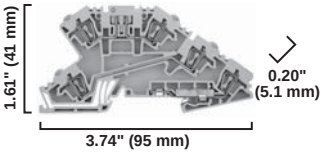			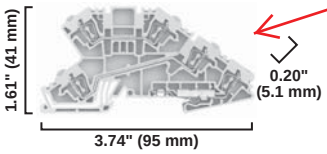		
Specifications	*Single Circuit Plug-In Component Block for a Variety of Components*			*Terminal Block with slot for Plug-In Component, Feed-Through Circuit and 1 Ground Connection*			*Analog Loop Control Terminal Block with 2 Feed-Through Circuits and 1 Ground Connection*		
Certifications	UL	CSA	IEC	UL	CSA	IEC	UL	CSA	IEC
Voltage Rating	600V AC/DC		500V AC/DC	300V AC/DC		250V AC/DC	300V AC/DC		250V AC/DC
Maximum Current	20 A		24 A	10 A		20 A	10 A		24 A
Wire Range (Rated Cross Section)	#30…12 AWG		4 mm²	#26…12 AWG		2.5 mm²	#26…12 AWG		2.5 mm²
Wire Strip Length	0.39 in. (10 mm)			0.31 in. (8 mm)			0.31 in. (8 mm)		
Density	59 pcs/f (/196 pcs/m)			59 pcs/ft (196 pcs/m)			59 pcs/ft (196 pcs/m)		
Housing Temperature Range	–58…+248 °F (–50…+120 °C)			–58…+248 °F (–50…+120 °C)			–58…+248 °F (–50…+120 °C)		
Terminal Blocks	**Cat. No.**		**Pkg Qty.**	**Cat. No.**		**Pkg Qty.**	**Cat. No.**		**Pkg Qty.**
Color Grey	**1492-L3P**		25	**1492-LDG3P**		25	**1492-LDAG3**		25
Accessories	**Cat. No.**		**Pkg Qty.**	**Cat. No.**		**Pkg Qty.**	**Cat. No.**		**Pkg Qty.**
Mounting Rails 1 m Symmetrical DIN (Steel)	**199-DR1**		10	**199-DR1**		10	**199-DR1**		10
1 m Symmetrical DIN (Aluminum)	**1492-DR5**		10	**1492-DR5**		10	**1492-DR5**		10
1 m Hi-Rise Symmetrical DIN (Aluminum)	**1492-DR6**		2	**1492-DR6**		2	**1492-DR6**		2
1 m Angled Hi-Rise Sym. DIN (Steel)	**1492-DR7**		2	**1492-DR7**		2	**1492-DR7**		2
End Barrier	**1492-EBL3**		50	**1492-EBLDAG3**		20	**1492-EBLDAG3**		20
End Anchors and Retainers Screwless End Retainer	**1492-ERL35**		20	**1492-ERL35**		20	**1492-ERL35**		20
DIN Rail — Normal Duty	**1492-EAJ35**		100	**1492-EAJ35**		100	**1492-EAJ35**		100
DIN Rail — Heavy Duty	**1492-EAHJ35**		50	**1492-EAHJ35**		50	**1492-EAHJ35**		50
Jumpers Plug-In Center Jumper — 50-pole	**1492-CJK5-50**		10	**1492-CJLJ5-50**		10	**1492-CJLJ5-50**		10
Plug-In Center Jumper — 10-pole	**1492-CJK5-10**		20	**1492-CJLJ5-10**		20	**1492-CJLJ5-10**		20
Plug-In Center Jumper — 9-pole	**1492-CJK5-9**		20	**1492-CJLJ5-9**		20	**1492-CJLJ5-9**		20
Plug-In Center Jumper — 8-pole	**1492-CJK5-8**		20	**1492-CJLJ5-8**		20	**1492-CJLJ5-8**		20
Plug-In Center Jumper — 7-pole	**1492-CJK5-7**		20	**1492-CJLJ5-7**		20	**1492-CJLJ5-7**		20
Plug-In Center Jumper — 6-pole	**1492-CJK5-6**		20	**1492-CJLJ5-6**		20	**1492-CJLJ5-6**		20
Plug-In Center Jumper — 5-pole	**1492-CJK5-5**		20	**1492-CJLJ5-5**		20	**1492-CJLJ5-5**		20
Plug-In Center Jumper — 4-pole	**1492-CJK5-4**		60	**1492-CJLJ5-4**		60	**1492-CJLJ5-4**		60
Plug-In Center Jumper — 3-pole	**1492-CJK5-3**		60	**1492-CJLJ5-3**		60	**1492-CJLJ5-3**		60
Plug-In Center Jumper — 2-pole	**1492-CJK5-2**		60	**1492-CJLJ5-2**		60	**1492-CJLJ5-2**		60
Other Accessories Disconnect Plug	**1492-DPL**		50	**1492-DPL**		50	—		—
Component Plug	**1492-CPL**		50	**1492-CPL**		50	—		—
Fuse Plug Without Blown Fuse Indicator	**1492-FPK2**		20	**1492-FPK2**		20	—		—
10…36V Blown Fuse Indicator	**1492-FPK224**		20	**1492-FPK224**		20	—		—
35…70V Blown Fuse Indicator	**1492-FPK248**		20	**1492-FPK248**		20	—		—
60…150V Blown Fuse Indicator	**1492-FPK2120**		20	**1492-FPK2120**		20	—		—
140…250V Blown Fuse Indicator	**1492-FPK2250**		20	**1492-FPK2250**		20	—		—
Reducing Sleeves 28…24 AWG (0.13…0.2 mm²) White	1492-PSL3-2		100	—		—	—		—
Reducing Sleeves 22…20 AWG (0.25…0.5 mm²) Grey	**1492-PSL3-5**		100	—		—	—		—
Reducing Sleeves 18 AWG (0.75…1.0 mm²) Dark Grey	**1492-PSL3-10**		100	—		—	—		—
Test Plug	**1492-TPL5**		25	**1492-TP23**		20	—		—
Electrical Warning Plate	**1492-EWPL5**		20	—		—	—		—
Group Marking Carrier	**1492-GM35**		25	**1492-GM35**		25	**1492-GM35**		25
Marking Systems Snap-In Marker Cards	**1492-M5X10** (144/card)		5	**1492-M5X10** (144/card)		5	**1492-M5X10** (144/card)		5
Snap-In Marker Cards	**1492-M5X5** (200/card)		5	**1492-M5X5** (200/card)		5	**1492-M5X5** (200/card)		5

BOM #24

Panduct® Type F Narrow Slot Wiring Duct

- Narrow slot/finger design provides more slots to fit the spacing of high-density terminal blocks and other hardware
- Material: Lead-free PVC
- UL recognized continuous use temperature: 122°F (50°C)
- UL 94 flammability rating of V-0
- Conforms with NFPA 79-2007 section 13.3.1 requirement for flame retardant material
- Provided with mounting holes
- Base and cover length is 6 feet

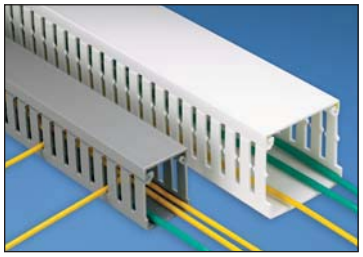

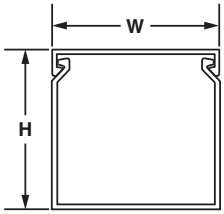

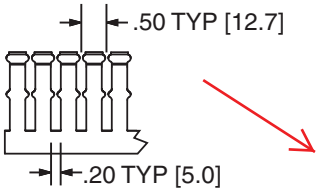

Multiple slot restrictors present with 2" and greater duct wall height.

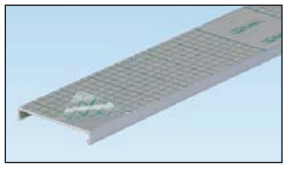

To order cover with protective film add "-F" to part number. 6" cover not available with film.

NEW!

Base Part Number	Duct Size (W x H)* In.	Duct Size (W x H)* mm	Slot Width In.	Slot Width mm	Cover Part Number	Std. Pkg. Qty.	Base Ctn. Qty.	Cover Ctn. Qty.
F.5X.5LG6	0.69 x 0.60	17.5 x 15.2	0.20	5.0	C.5LG6	6	120	120
F.5X1LG6	0.69 x 1.06	17.5 x 26.9	0.20	5.0	C.5LG6	6	120	120
F.75X.75LG6	0.93 x 0.82	23.6 x 20.9	0.20	5.0	C.75LG6	6	120	120
F.75X1.5LG6	0.93 x 1.57	23.6 x 39.9	0.20	5.0	C.75LG6	6	120	120
F1X1LG6	1.26 x 1.13	32.0 x 28.7	0.20	5.0	C1LG6	6	120	120
F1X1.5LG6	1.26 x 1.62	32.0 x 41.1	0.20	5.0	C1LG6	6	120	120
F1X2LG6	1.26 x 2.12	32.0 x 53.8	0.20	5.0	C1LG6	6	120	120
F1X3LG6	1.26 x 3.12	32.0 x 79.2	0.20	5.0	C1LG6	6	120	120
F1X4LG6	1.26 x 4.10	32.0 x 104.1	0.20	5.0	C1LG6	6	60	120
F1.5X1LG6	1.75 x 1.12	44.5 x 28.4	0.20	5.0	C1.5LG6	6	120	120
F1.5X1.5LG6	1.75 x 1.62	44.5 x 41.1	0.20	5.0	C1.5LG6	6	120	120
F1.5X2LG6	1.75 x 2.12	44.5 x 53.8	0.20	5.0	C1.5LG6	6	120	120
F1.5X3LG6	1.75 x 3.12	44.5 x 79.2	0.20	5.0	C1.5LG6	6	120	120
F1.5X4LG6	1.75 x 4.10	44.5 x 104.1	0.20	5.0	C1.5LG6	6	60	120
F2X1LG6	2.25 x 1.12	57.2 x 28.4	0.20	5.0	C2LG6	6	120	120
F2X1.5LG6	2.25 x 1.62	57.2 x 41.1	0.20	5.0	C2LG6	6	120	120
F2X2LG6	2.25 x 2.12	57.2 x 53.8	0.20	5.0	C2LG6	6	120	120
F2X3LG6	2.25 x 3.12	57.2 x 79.2	0.20	5.0	C2LG6	6	60	120
F2X4LG6	2.25 x 4.10	57.2 x 104.1	0.20	5.0	C2LG6	6	60	120
F2X5LG6	2.25 x 5.10	57.2 x 129.5	0.20	5.0	C2LG6	6	60	120
F2.5X3LG6	2.75 x 3.12	69.9 x 79.2	0.20	5.0	C2.5LG6	6	120	120
F3X1LG6	3.25 x 1.12	82.6 x 28.4	0.20	5.0	C3LG6	6	120	120
F3X2LG6	3.25 x 2.12	82.6 x 53.8	0.20	5.0	C3LG6	6	120	120
F3X3LG6	3.25 x 3.12	82.6 x 79.2	0.20	5.0	C3LG6	6	60	120
F3X4LG6	3.25 x 4.10	82.6 x 104.1	0.20	5.0	C3LG6	6	60	120
F3X5LG6	3.25 x 5.10	82.6 x 129.5	0.20	5.0	C3LG6	6	60	120
F4X2LG6	4.25 x 2.12	108.0 x 53.8	0.20	5.0	C4LG6	6	60	120
F4X3LG6	4.25 x 3.12	108.0 x 79.2	0.20	5.0	C4LG6	6	60	120
F4X4LG6	4.25 x 4.10	108.0 x 104.1	0.20	5.0	C4LG6	6	60	120
F4X5LG6	4.25 x 5.10	108.0 x 129.5	0.20	5.0	C4LG6	6	60	120
F6X4LG6	6.25 x 4.15	158.8 x 105.4	0.20	5.0	C6LG6	6	60	120

Part number shown for LG (Light Gray). For other color availability see color selection guide, page C1.48.
Base and cover sold separately.
*"H" dimension includes duct and cover.

A. System Overview
B1. Cable Ties
B2. Cable Accessories
B3. Stainless Steel Ties
C1. Wiring Duct
C2. Surface Raceway
C3. Abrasion Protection
C4. Cable Management
D1. Terminals
D2. Power Connectors
D3. Grounding Connectors
E1. Labeling Systems
E2. Labels
E3. Pre-Printed & Write-On Markers
E4. Permanent Identification
E5. Lockout/ Tagout & Safety Solutions
F. Index

THIS COPY IS PROVIDED ON A RESTRICTED BASIS AND IS NOT TO BE USED IN ANY WAY DETRIMENTAL TO THE INTERESTS OF PANDUIT CORP.

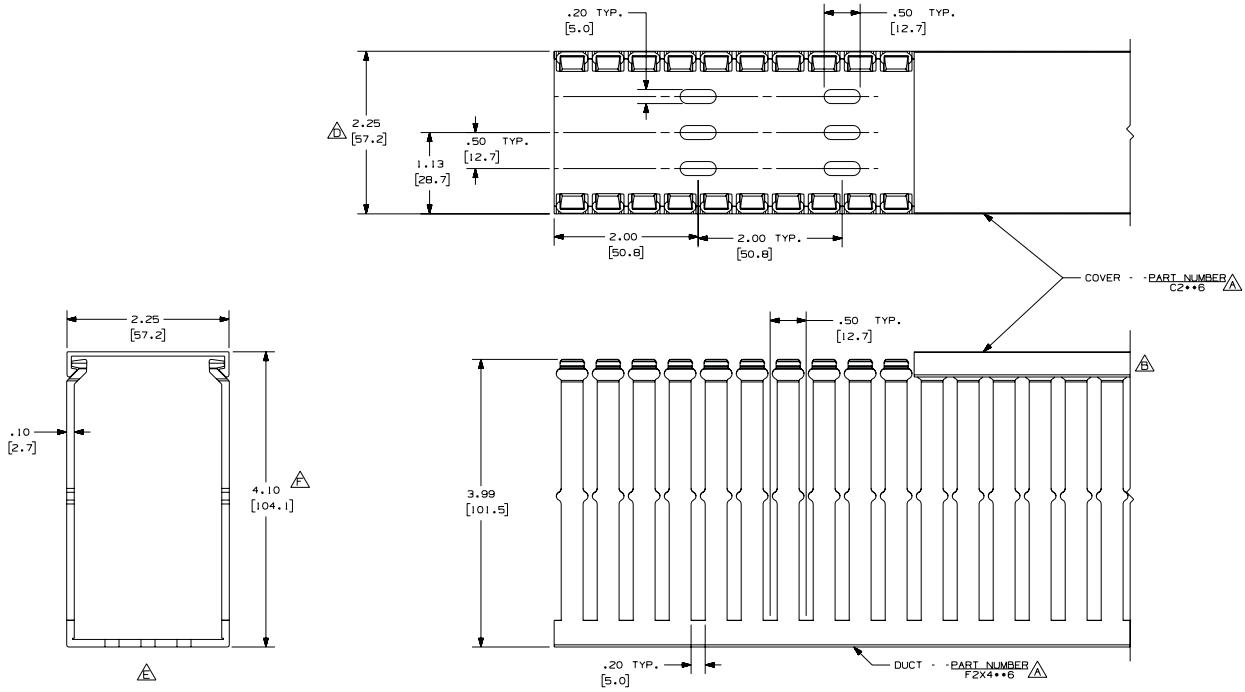

NOTES:

1. ALL DIMENSIONS ARE REFERENCE ONLY.
2. DIMENSIONS IN PARENTHESIS ARE METRIC.
3. THE ** DENOTE COLOR.
4. DUCT AND COVER AREA AVAILABLE IN 6 FT [1828.8] LENGTHS

REV	DATE	BY	CHK	DESCRIPTION
--	--------	---	---	G. ADDED LENGTH NOTE F. CORRECTED DIMENSION
2	7-23-07	JCST	MKBE	E. DELETED DIMENSION D. ADDED DIMENSION
--	--------	---	---	C. CHANGED DRAWING SIZE
1	9-24-04	JCST	MKBE	B. CHANGED VIEW A. ADDED TOP VIEW, NOTES, AND LABELS
R	3-20-03	JCST	JGG	DRAWING RELEASED

CAD FILENAME/LAYERS: D11000CL_DC/00C

PANDUIT CORP. TINLEY PARK, ILLINOIS

WIRING DUCT - TYPE F DUCT WITH COVER
2 X 4
MARKETING DRAWING

DRAWN BY: JCST
DATE: 3-20-03
CHECKED BY: JGG
MAT'L: PVC
SCALE: FULL
DRAWING NO. 36897-774
DWG SIZE: C

BOM #25

Mounting rails allow many blocks to be fastened in a panel with only a few screws to anchor the rail to the panel. Mounting rails allow easy installation and removal of a block in a row.

Cat. No.	Description	Pkg Qty.	Dimensions∗
199-DR1	Symmetrical Rail 35 mm x 7.5 mm 3.28 ft (1 m) long Zinc-Plated Clear Chromated Steel EN60715 **DIN #3**	10	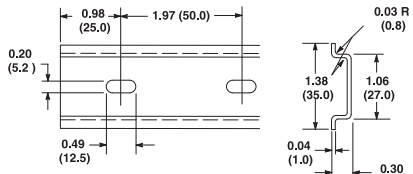 #10–32 or M5 Recommended Maximum Mounting Screw Size
199-DR2	Same as Cat. No. 199-DR1, but length = 2 m	20	
199-DR4	Heavy Duty Symmetrical Rail 35 mm x 15 mm 3.28 ft (1 m) long Zinc-Plated Clear Chromated Steel EN60715 **DIN #3**	5	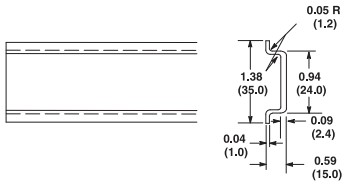
1492-DR3	Mini 15 mm x 5.5 mm Rail 3.28 ft (1 m) long Zinc-Plated Clear Chromated Steel EN60715 **DIN #2**	5	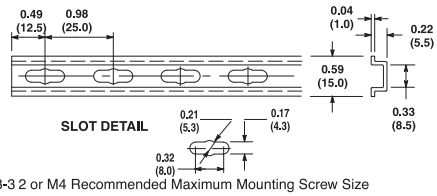 #8-3 2 or M4 Recommended Maximum Mounting Screw Size
1492-DR5	Symmetrical Rail 35 mm x 7.5 mm 3.28 ft (1 m) long Copper-Free Aluminum EN60715 For Bul. 1492 Terminal Blocks Only **DIN #3**	10	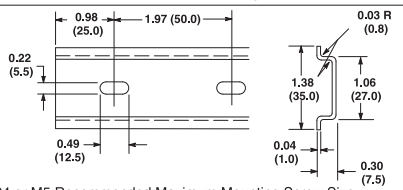 #12–24 or M5 Recommended Maximum Mounting Screw Size
❄ **1492-DR6**	Symmetrical Rail 35 mm x 7.5 mm 2.26 in. (57.4 mm) high 3.28 ft (1 m) long Copper-Free Aluminum For Bul. 1492 Terminal Blocks Only **DIN #3**	2	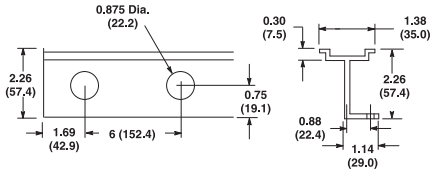 Wire insulator plug for wire access through rail — use Heyco UB875
❄ **1492-DR7**	Symmetrical Rail 35 mm x 7.5 mm 2.80 in. (71.0 mm) high 3.28 ft (1 m) long Angled 30° Zinc-Plated, Chromated Steel **DIN #3**	2	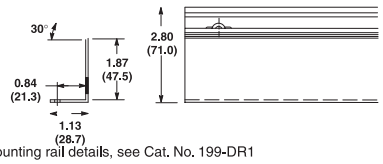 For mounting rail details, see Cat. No. 199-DR1
1492-DR8	Symmetrical Rail 35 mm x 15 mm 3.28 ft (1 m) long Copper EN60715 **DIN #3**	5	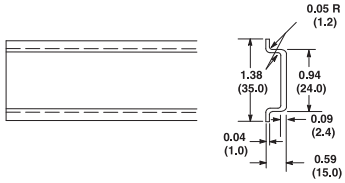
‡ **1492-DR9**	Symmetrical Rail 35 mm x 15 mm 3.28 ft (1 m) long Zinc-Plated Clear Chromated Steel EN60715 **DIN #3**	5	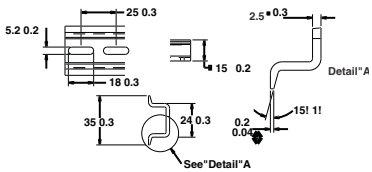

∗ Dimensions shown in inches (millimeters). Dimensions are not intended to be used for manufacturing purposes.
❄ 0.218 x 0.50 in. (5.5 x 12.7 mm) slotted mounting holes every 3 in. (76.2 mm) starting 1.69 in. (42.9 mm) from end.
‡ Dimensions in millimeters.

BOM #26

Hoffman

ELECTRIC HEATERS

115/230 Volt
100/200 Watt

115/230 Volt
400/800 Watt

115/230 Volt
1300 Watt

INDUSTRY STANDARDS

UL 508A Component Recognized; File No. E61997

CSA Certified, CSA File No. LR42186
CE

APPLICATION

Protect mechanical, electrical and electronic equipment from low temperatures, condensation and corrosion with this thermostatically controlled, fan-driven heater that maintains a stable enclosure temperature.
Fan draws cool air from the bottom of the enclosure and passes this air across the thermostat and heating element before being released into enclosure cavity. Heated air is discharged through the top of the heater unit.

SPECIFICATIONS

- Aluminum housing
- Thermostat range adjustable from 0 F to 100 F (-18 C to 38 C)
- Four 10-32 x self-tapping screws are included with each heater
- Ball bearing fan
- Terminal strip with clamp connector that accepts both solid and stranded wire

FINISH

- Brushed aluminum

⚠ CAUTION

These electric heaters are not designed for use in dusty, dirty, corrosive, or hazardous locations. Portions of the heater can get hot. Adequate protection must be taken to protect people from potential burns, and to protect other components from this heat. Pentair Technical Products recommends this heater only be installed in a totally-enclosed metal enclosure.

DO NOT INSTALL HEATERS ON WOOD PANELS.
Heat sensitive components should not be placed near the heater discharge area since this air can be quite warm. The clearance range defines the space that must be kept free of these components for proper and safe operation of the heater.

Performance Data **100 and 200 Watt Heaters**

CATALOG NUMBERS	DAH1001A	DAH1002A	DAH2001A	DAH2002A
ELECTRICAL DATA				
Rated Voltage	**115**	**230**	**115**	**230**
Frequency (Hz)	50/60	50/60	50/60	50/60
Power Consumption (Watts)	100	100	200	200
Nominal Current (Amps)	0.98	0.49	1.89	0.95
HEATING PERFORMANCE				
Watts	**100**	**100**	**200**	**200**
UNIT CONSTRUCTION				
Weight (lb./kg)	1.6/0.73	1.6/0.73	1.6/0.73	1.6/0.73
X (in./mm)	4.00/102	4.00/102	6.00/152	6.00/152

Performance Data **400 and 800 Watt Heaters**

CATALOG NUMBERS	DAH4001B	DAH4002B	DAH8001B	DAH8002B
ELECTRICAL DATA				
Rated Voltage	**115**	**230**	**115**	**230**
Frequency (Hz)	50/60	50/60	50/60	50/60
Power Consumption (Watts)	400	400	800	800
Nominal Current (Amps)	3.72	1.86	7.37	3.69
HEATING PERFORMANCE				
Watts	**400**	**400**	**800**	**800**
UNIT CONSTRUCTION				
Weight (lb./kg)	2.2/1.00	2.2/1.00	2.2/1.00	2.2/1.00
X (in./mm)	6.00/152	6.00/152	8.00/203	8.00/203

Performance Data **1300 Watt Heaters**

CATALOG NUMBERS	DAH13001C	DAH13002C
ELECTRICAL DATA		
Rated Voltage	**115**	**230**
Frequency (Hz)	50/60	50/60
Power Consumption (Watts)	1300	1300
Nominal Current (Amps)	11.5	5.7
HEATING PERFORMANCE		
Watts	**1300**	**1300**
UNIT CONSTRUCTION		
Weight (lb./kg)	3.4/1.54	3.4/1.54
X (in./mm)	8.00/203	8.00/203

Dimensions and Clearance Range Drawing for DAH1001A, -2A and DAH2001A, -2A

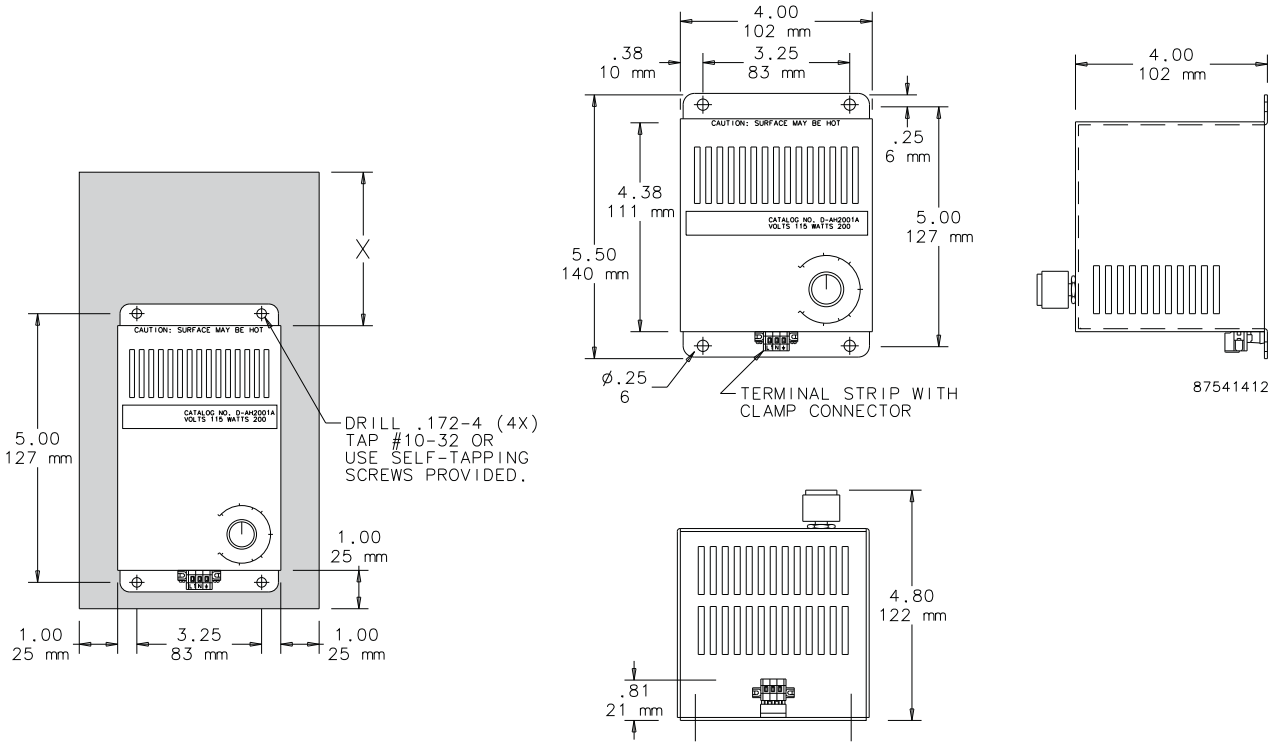

Dimensions and Clearance Range Drawing for DAH4001B, -2B and DAH8001B, -2B

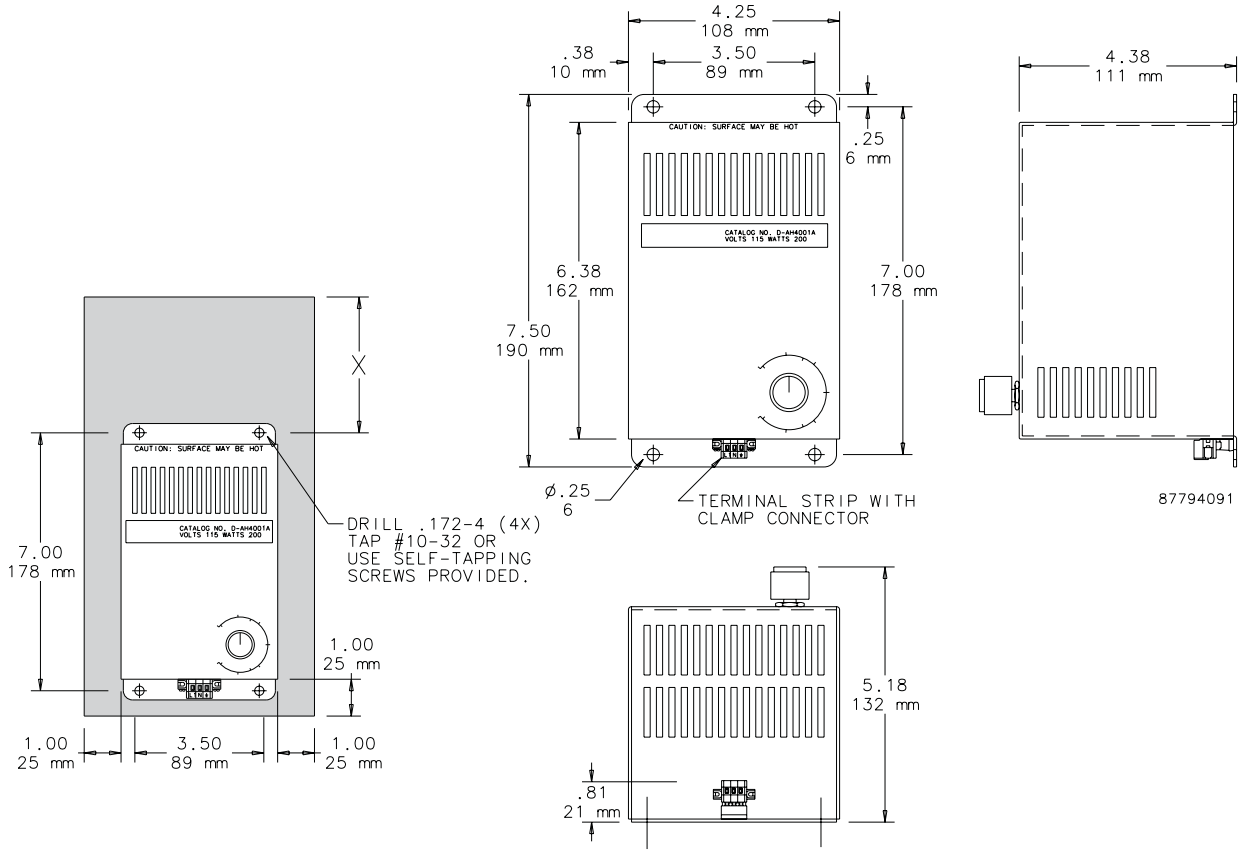

Dimensions and Clearance Range Drawing for DAH13001C and DAH13002C

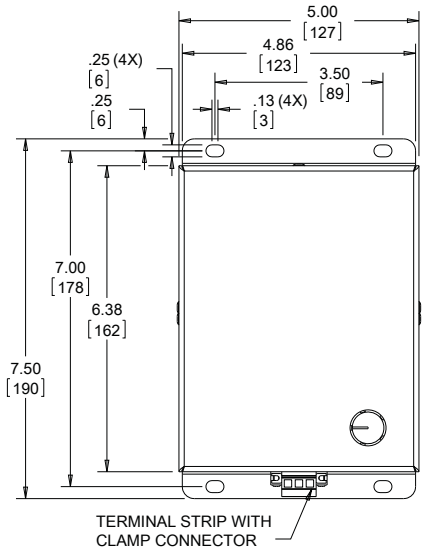

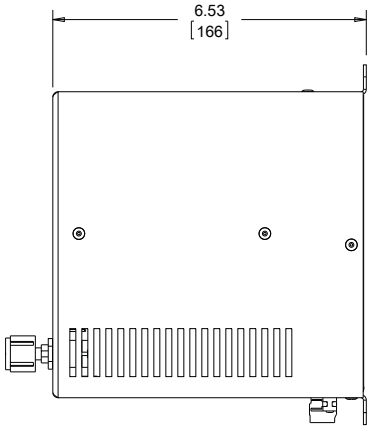

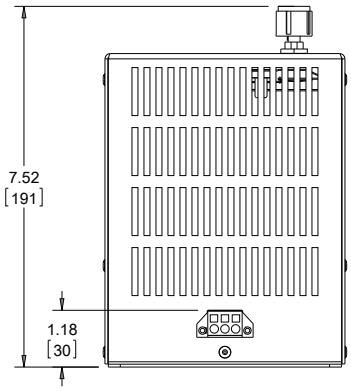

89091692

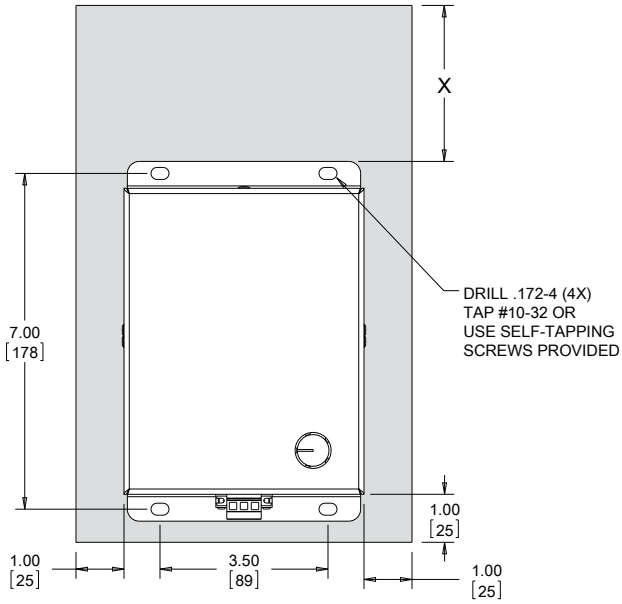

Fliteway Technologies, Inc.

Operations and Maintenance Manual

Q14508 Rev 6

CB & I Federal Services
Pump and Treat Groundwater System
Bulk Fuels Facility
Kirtland AFB

2129 East Birchwood Ave. Cudahy, WI 53110

(414) 483-5600 1-800-236-3580 FAX (414) 483-1957

Fliteway Technologies, Inc.
2129 East Birchwood Ave.• Cudahy, WI 53110
(414) 483-5600 • 1-800-236-3580 • FAX (414) 483-1957

Q14508 Rev 6

CB&I Federal Services

Pump and Treat Groundwater Treatment System, Kirtland Air Force Base, Bulk Fuels Facility

- **One (1) Groundwater Treatment Feed Tank**
  - 6150 gallon steel tank, 122" Outer Diameter x 125" High
  - Interior Epoxy Coating for Potable Water
  - Exterior Polyurethane
  - Openings per drawing Tank Data Sheet supplied by customer
  - Conic roof
  - ¼" plate wall thickness
  - 24" man way
  - One (1) Rosemount Liquid Level Transmitter [3051L-2-A-G0-M-D-21-A-J] (LIT-3101)
  - Two (2) Flotech L-6EPS-S-S-S-3A Liquid level switches [L6EPS-S-S-3-A] (LSH-3100 LSL-3100)
  - Seismic calculations for anchoring the Tank

- **One (1) Feed Pump Skid**

  - Steel Base Skid (approximately 6' by 10') with Forklift pockets and Bolt down Tabs

  - Two (2) Gould ANSI Centrifugal Pumps (P-112A P-112B)
    - Gould ANSI Model 3196 MTI 2x3-6 with 15 HP TEFC Motors (Inverter Rated) each rated for 200 GPM at 100 TDH
    - Pumps plumbed in Parallel with 4" Steel piping with Valves, Flex connectors,
    - Ashcroft Pressure Gauges [P/N 45-1259-S-SL-04-60-#] (PI-3102) and Sample ports

  - Two (2) VFD's installed in NEMA4 (High Voltage) Enclosure mounted and wired on Feed Pump Skid
    - One (1) 36" by 36" NEMA 4 Weigmann Enclosure and vent fan
    - Two (2) 20HP Allen-Bradley VFD's [20BD027A0AYNAND0] (SIC-3102A SIC-3102B)
      - Each with HIM Module [20-HIM-A3] and Ether/IP COMM card [20-COMM-ER]
    - Two (2) 5% Line Reactors [1321-3R35-C]
    - Two (2) each ISC Model LR6304FAC15 Multi-Round Liquid Bag Filter Housings each with:
    - Carbon Steel housing (holds six (6) #2 size 7" by 32" Filter Bags
    - Each Rated for 1,200 GPM with 26.4 sq. ft. filtering area
    - 4" Flanged Inlet / Discharge Ports
    - 1" NPT drain
    - Buna N Seals on lid and baskets, differential, drain, and vent ports
    - Two part epoxy finish

- Davit cover lift
- Heavy Duty Legs
- HH Pressure Switch [Dwyer A1F-O-SS-1-2 with weather cover A-447] (PSH-3102)
- Two (2) Differential Pressure Indicators [45-1130SL-25-30#] across the bag filters (PDI-3102A/B)
- Bag Filters plumbed in Parallel with 4" Steel piping with Valves, Flex connectors, Ashcroft Pressure Gauges [P/N 45-1259-S-SL-04-60-#] (PI-3103) and Sample ports
- One (1) McCrometer 4" Flow Meter [P/N VM04QE03F-E1HS-V3] (40 to 900 GPM) with Local Display Transmitter and 4-20mA Output (FIT-3102)

- One (1) NEMA 4 Junction Box (Low Voltage) prewired with terminal strips to facilitate wiring to System Control Panels

- **One (1) Treated Water Storage Tank**
  - 6150 gallon steel tank, 122" Outer Diameter x 125" High
  - Interior Epoxy Coating for Potable Water
  - Exterior Polyurethane
  - Openings per drawing Tank Data Sheet supplied by customer
  - Conic roof
  - ¼" plate wall thickness
  - 24" man way
  - One (1) Rosemount Liquid Level Transmitter [P/N 3051L-2-A-G0-M-D-21-A-J] (LIT-3107)
  - Two (2) Flotech 6EPS-S-S-S-3A Liquid level switches [P/N L6EPS-S-S-3-A] (LSH-3106 LSL-3106)
  - Seismic calculations for anchoring the Tank

- **One (1) Treated Water Pump Skid**

  - Steel Base Skid (approximately 6' by 10') with Forklift pockets and Bolt down Tabs

  - One (1) Gould ANSI Centrifugal Pump (P-118)
    - Gould ANSI Model 3196 MTI 3x4-8G with 40 HP TEFC Motor (Inverter Rated) rated for 400 GPM at 180 TDH
    - Pump plumbed with 4" Steel piping with Valves, Flex connectors, Ashcroft [P/N 45-1259-S-SL-04-100-#] (PI-3108) Pressure Gauges and Sample ports

  - One (1) VFD Installed in NEMA4 (High Voltage) Enclosure mounted and wired on Treated Water Pump Skid
    - One (1) 36" by 36" NEMA 4 Weigmann Enclosure and vent fan
    - One (1) 50HP Allen-Bradley VFD [20BD065A0AYNAND0] (SIC-3108)
      - With HIM Module [20-HIM-A3] and Ether/IP COMM card [20-COMM-ER]
    - One (1) 5% Line Reactor [1321-3R80-C]

  - Two (2) each ISC Model LR6304FAC15 Multi-Round Liquid Bag Filter Housings each with:
    - Carbon Steel housing (holds six (6) #2 size 7" by 32" Filter Bags
    - Each Rated for 1,200 GPM with 26.4 sq. ft. filtering area
    - 4" Flanged Inlet / Discharge Ports
    - 1" NPT drain
    - Buna N Seals on lid and baskets, differential, drain, and vent ports
    - Two part epoxy finish

- Davit cover lift
- Heavy Duty Legs
- HH Pressure Switch [Dwyer A1F-O-SS-1-2 with weather cover A-447] (PSH-3108)
- Two (2) Differential Pressure indicators [45-1130SL-25-30#] across the bag filters (PDI-3108A/B)
- Bag Filters plumbed in Parallel with 4" Steel piping with Valves, Flex connectors, Ashcroft Pressure Gauges [P/N 45-1259-S-SL-04-100-#] (PI-3102) and Sample ports
- One (1) McCrometer 4" Flow Meter [VM04QE03F-E1HS-V3] (40 to 900 GPM) with Local Display Transmitter and 4-20mA Output (FIT-3108)

- One (1) NEMA 4 Junction Box (Low Voltage) prewired with terminal strips to facilitate wiring to System Control Panel.

One (1) Air Compressor System
One (1) **Mattei Model AC-15 LX Air Compressor rated for 106 CFM at 115 PSIG**
- **20 HP 460 VAC Three Phase TEFC Motor**
- After Cooler
- Standard AC-15 Control Panel
- One (1) 1" Pressure Regulator [Norgen R17-801-RGLA]
- One (1) 1" Particulate Filter [Norgen F17-800-M3DA]
- One (1) 1" Coalescing Filter [Norgen F46-801-M0DA]
- One (1) Electronic Auto Drain
- Plumbed and tested.

- **Two (2) Day Factory functional and wet testing of System including temporary electrical connections from skid junction boxes to shop power**

- **Four (4) Day On-Site Installation Assistance**

- **Four (4) Day On-Site Startup Assistance**

Q14508R5 -CB&I

ITEM	MANUFACTURER	MODEL	FLITEWAY ASSIGNED SERIAL NUMBER	MANUFACTURER ASSIGNED SERIAL NUMBER
GROUNDWATER TREATMENT FEED TANK				
ROSEMOUNT TRANSMITTER	ROSEMOUNT	3051L2AG0MD21AJ	N/A	2493096
FEED PUMP SKID				
GOULDS CENTRIFUGAL PUMPS #1	GOULDS	3196 MTI 2X3-6	N/A	N723H146-1
PUMP MOTOR #1 -	BALDOR	09P011Z602	N/A	Z1407180103
GOULDS CENTRIFUGAL PUMPS #2	GOULDS	3196 MTI 2X3-6	N/A	N723H146-2
PUMP MOTOR #2 -	BALDOR	09P011Z602	N/A	Z1407180148
McCROMETER FLOW METER	McCROMETER	VM04QE03F-E1HS-V3	N/A	15-1023
TREATED WATER STORAGE TANK				
ROSEMOUNT TRANSMITTER	ROSEMOUNT	3051L2AG0MD21AJ	N/A	2493097
TREATMENT WATER PUMP SKID				
GOULDS CENTRIFUGAL PUMPS	GOULDS	3196 MTI 3X4-8G	N/A	N723H145
PUMP MOTOR	BALDOR	12H0114292G1	N/A	C1501290072
McCROMETER FLOW METER	McCROMETER	VM04QE03F-E1HS-V3	N/A	15-1022
MATTEI AIR COMPRESSOR	MATTEI	AC-15 LX	N/A	EZVPGF-2014

Fliteway Technologies, Inc.
2129 East Birchwood Ave., Cudahy, WI 53110
(414) 483-5600 • 1-800-236-3580 • FAX (414) 483-1957

WARRANTY

ONE YEAR LIMITED WARRANTY- Fliteway Technologies, Inc. remediation equipment is warranted by Fiteway to the original user against defects in workmanship or materials under normal use for one year after date of shipment. Exceptions to this are positive displacement vacuum pumps and blowers which have 18 Month warranties direct from the original manufacturer (Roots and Sutorbilt only). Any part determined by Fliteway Technologies, Inc. to be defective in material or workmanship and returned to Fliteway Technologies, Inc., shipping costs prepaid, will be repaired or replaced at Fliteway's option, as the exclusive remedy. See PROMPT DISPOSITION below for limited warranty claim procedures. This limited warranty gives the purchaser specific legal rights which may vary from state to state.

LIMITATIONS OF LIABILITY- To the extent allowable under applicable law, Fliteway's liability (or incidental and consequential damages is expressly disclaimed. Fliteway's liability in all events is limited to, and shall not exceed, the purchase price.

PRODUCT SUITABILITY - Many states and localities have regulations and codes governing sales, construction, installation, and/or use of products for certain purposes, which may vary from those in neighboring areas. While Fliteway Technologies, Inc. attempts to assure that its products comply with such codes, it cannot guarantee compliance, and cannot be responsible for how the product is installed or used. Before purchase and use of a product, please determine local and national codes and regulations, review the product application, and verify that the product, installation and use comply with those regulations and codes.

PROMPT DISPOSITION - Fliteway Technologies, Inc. will make every effort for a prompt correction or other adjustment with respect to any product which proves to be defective within the limited warranty. For any product believed to be defective within limited warranty, first write or call Fliteway Technologies, Inc. giving the model and serial number of tile unit and describing the nature of the defect. Title and risk of loss pass to the buyer on delivery to common carrier. If product was damaged in transit to you, file a claim with carrier. Freight of postage charges on returns to the factory are at the customer's expense. If returned product is returned under warranty, the manufacturer will cover return freight.

Fliteway Technologies, Inc.

Bill of Materials

2129 East Birchwood Ave. Cudahy, WI 53110

(414) 483-5600 1-800-236-3580 FAX (414) 483-1957

Warehouse 18 *** INDENTED B.O.M. REPORT *** Batch Qty. 1

From WTQ14508 GRD TK to WTQ14508 GRD Scrap/Yield OFF

Level	Seq	Stock Code	Description	Category Code/Description	Scrap/ Yield %	Inst.	Lead Time	U/M	Usage Qty.
**Top Assembly*		18-WTQ14508 GRD TK	GRNDWTR TRMT FEED TANK CB&I KI	04 Distributed Goods	100.00	N			
1	001	00-TK-6150	TANK, 6150 GAL. SW 122"DIA X 1	01 Soil Remediation		N		EA	1.000
1	002	00-EC-3051L2AG0MD2	ROSEMOUNT TRANSMITTER -250 TO	01 Soil Remediation		N		EA	1.000
1	003	00-FS-L6EPS-S-S-3A	FLOAT SWITCH 304SS 1" FLOTECT	01 Soil Remediation		N		EA	2.000

** END OF REPORT **

Warehouse 18 *** INDENTED B.O.M. REPORT *** Batch Qty. 1

From WTQ14508 FD SKD to WTQ14508 FD Scrap/Yield OFF

Level	Seq	Stock Code	Description	Category Code/Description	Scrap/ Yield %	Inst.	Lead Time	U/M	Usage Qty.
**Top Assembly*		18-WTQ14508 FD SKD	FEED PUMP SKID CB&I KIRTLAND A	04 Distributed Goods	100.00	N			
1	001	00-ST-C7X12.25	CHANNEL, 7" X 12.25	01 Soil Remediation		N		FT	40.000
1	002	00-ST-72X120X3/16	DIAMOND PLATE 72 X 120 X 3/16"	01 Soil Remediation		N		IN	120.000
1	003	00-ST-RT4X2X.25	STEEL,RECT TUBING, 4X2X1/4	01 Soil Remediation		N		FT	20.000
1	004	00-ST-SQT1.5X1/4	SQUARE TUBE 1-1/2 X 1-1/2 X 1/	01 Soil Remediation		N		FT	15.000
1	005	00-ST-SQT2X2X1/4	SQUARE TUBE 2 X 2 X 1/4"	01 Soil Remediation		N		FT	12.000
1	006	00-IF-LR6304FAC15	BAG FILTER 4" CARBON STEEL (6)	01 Soil Remediation		N		EA	2.000
1	007	00-IF-PO10P2SH	FILTER BAGS, 10 MICRON #2 7X32	01 Soil Remediation		N		EA	25.000
1	008	04-WP-3196 MTI 2X3	PUMP GOULDS 3196 MTi2X3-6 200G	04 Distributed Goods		N		EA	2.000
1	009	00-FM-VM04QE03F-E1	FLOW METER 4" 40-400GPM 4-20mA	01 Soil Remediation		N		EA	1.000
1	010	00-GU-451130SL-30#	DIFF PRESS 0-30 45-1130SL-25-S	01 Soil Remediation		N		EA	2.000
1	011	00-GU-45-1259-60#	PRESS GAUGE 0-60 ASCRFT 45-125	01 Soil Remediation		N		EA	2.000
1	012	00-VA-4" BUTTERFLY	BUTTERFLY VALVE 4" GEAR LUG EP	01 Soil Remediation		N		EA	6.000
1	013	00-PF-4 F	FLANGE, 4" WELD-ON (SLIP) 150#	01 Soil Remediation		N		EA	27.000
1	014	00-PF-4X6 EXP JNTS	EXPANSION JOINTS 4"X6" EPDM RB	01 Soil Remediation		N		EA	2.000
1	015	00-ST-PIPEB4SCHD40	STEEL PIPE,BLACK,4 in,SCHED 40	01 Soil Remediation		N		FT	15.000
1	016	00-PF-4 90	ELBOW 4" 90 CS STD LR WELD	01 Soil Remediation		N		EA	7.000
1	017	00-PF-4 T	TEE,4" CS STD WELD	01 Soil Remediation		N		EA	3.000
1	018	00-EX-IMC3/4	CONDUIT IMC 3/4"	03 Electrical		N		FT	5.000
1	019	00-EF-3/4-UA	CONDUIT FLEX 3/4"	03 Electrical		N		EA	4.000
1	020	00-EF-1/2-UA	CONDUIT, FLEX 1/2"	03 Electrical		N		FT	12.000
1	021	00-EF-K05091	FITTING, 1/2 90 LIQUIDTITE	03 Electrical		N		EA	2.000
1	022	00-EF-K07591	FITTING, 3/4 90 LIQUIDTITE	03 Electrical		N		EA	2.000
1	023	00-EF-K0751	FITTING, 3/4" STRAIGHT LIQUIDT	03 Electrical		N		EA	2.000
1	024	00-PF-3 FLNG SLIP	FLANGE 3 150# CS RF SLIP ON	01 Soil Remediation		N		EA	2.000
1	025	00-PF-4X2 RB WELD	REDUCER BUSHING 4X2" CS STD CO	01 Soil Remediation		N		EA	2.000
1	026	00-PF-4X3 RB WELD	REDUCER BUSHING 4X3" CS STD CO	01 Soil Remediation		N		EA	2.000
1	027	00-PF-2 FLNG WELD	FLANGE 2 WELD NECK 150# CS STD	01 Soil Remediation		N		EA	2.000

** END OF REPORT **

Warehouse 15 *** INDENTED B.O.M. REPORT *** Batch Qty. 1

From CQ14508R5 FEED to CQ14508R5 FEE Scrap/Yield OFF

Level	Seq	Stock Code	Description	Category Code/Description	Scrap/ Yield %	Inst.	Lead Time	U/M	Usage Qty.
**Top Assembly*		15-CQ14508R5 FEED	CONTROL PANEL FEED PUMP CB&I K	03 Electrical	100.00	N			
1	001	00-EB-N412363612C	ENCLOSURE SUBPANEL,SWNG DR,PAD	03 Electrical		N		EA	1.000
1	002	00-EB-NP3636C	SUB PANEL WIEGMANN	03 Electrical		N		EA	1.000
1	003	00-EB-N412MFK	FOOT KIT	03 Electrical		N		EA	1.000
1	004	00-EB-N41214TWPL	HANDLE, WING PDLK	03 Electrical		N		EA	2.000
1	005	00-EB-N412121206C	ENCLOSURE 12X12X6	03 Electrical		N		EA	1.000
1	006	00-EB-NP1212C	SUB-PANEL 12X12	03 Electrical		N		EA	1.000
1	007	00-VFD-20BD027A0AY	VAR FRQ PWRFLX 27A 20HP 20BD02	03 Electrical		N		EA	2.000
1	008	00-VFD-1321-3R35-C	LINE REACTOR 35A ALLEN BRADLEY	03 Electrical		N		EA	2.000
1	009	00-VFD-20HIMA3	HIM MODULE LCD DISPLAY NUMERIC	03 Electrical		N		EA	2.000
1	010	00-VFD-20COMM-ER	COMMUNICATIONS CARD A-B DUAL-P	03 Electrical		N		EA	2.000
1	011	00-EC-G3P-040	CIRCUIT BREAKER 40A 3P 480VAC	03 Electrical		N		EA	2.000
1	012	00-EH-4WT46	FAN FOR PANELS 115 CFM 115V	03 Electrical		N		EA	1.000
1	013	00-EH-4YD78	FILTER GUARD ASSY, ALUM 4-45/6	03 Electrical		N		EA	2.000
1	014	00-EH-3RP12	CORDSET, AXIAL FAN, 36"	03 Electrical		N		EA	1.000
1	015	00-EC-GDL 1	FUSE,1AMP, FERRAZ SHAWMUT	03 Electrical		N		EA	1.000
1	016	00-EC-57.904.6355	FUSEHOLDER 1P GLASS ABB	03 Electrical		N		ea	1.000
1	017	00-EC-011419-00	THERMOSTAT, 32-140F N.O. DIN M	03 Electrical		N		EA	1.000
1	018	00-EC-1D374	GROUND BAR KIT PK7GTA	03 Electrical		N		EA	1.000
1	019	00-PS-A1F-O-SS-1-2	PRESSURE SWITCH 4-75 PSIG	03 Electrical		N		EA	1.000
1	020	00-PS-A-447	WEATHERPROOF HOUSING A1F PRESS	03 Electrical		N		EA	1.000

** END OF REPORT **

Warehouse 18 *** INDENTED B.O.M. REPORT *** Batch Qty. 1

From WTQ14508 TRT TK to WTQ14508 TRT Scrap/Yield OFF

Level	Seq	Stock Code	Description	Category Code/Description	Scrap/ Yield %	Inst.	Lead Time	U/M	Usage Qty.
**Top Assembly*		18-WTQ14508 TRT TK	TREATED WATER STRG TANK CB&I K	04 Distributed Goods	100.00	N			
1	001	00-TK-6150	TANK, 6150 GAL. SW 122"DIA X 1	01 Soil Remediation		N		EA	1.000
1	002	00-EC-3051L2AG0MD2	ROSEMOUNT TRANSMITTER -250 TO	01 Soil Remediation		N		EA	1.000
1	003	00-FS-L6EPS-S-S-3A	FLOAT SWITCH 304SS 1" FLOTECT	01 Soil Remediation		N		EA	2.000

** END OF REPORT **

Warehouse 18 *** INDENTED B.O.M. REPORT *** Batch Qty. 1

From WTQ14508 TRT SK to WTQ14508 TRT Scrap/Yield OFF

Level	Seq	Stock Code	Description	Category Code/Description	Scrap/ Yield %	Inst.	Lead Time	U/M	Usage Qty.
**Top Assembly*		18-WTQ14508 TRT SK	TREATED WATER PUMP SKID CB&I K	04 Distributed Goods	100.00	N			
1	001	00-ST-C7X12.25	CHANNEL, 7" X 12.25	01 Soil Remediation		N		FT	40.000
1	002	00-ST-72X120X3/16	DIAMOND PLATE 72 X 120 X 3/16"	01 Soil Remediation		N		IN	120.000
1	003	00-ST-RT4X2X.25	STEEL,RECT TUBING, 4X2X1/4	01 Soil Remediation		N		FT	20.000
1	004	00-ST-SQT1.5X1/4	SQUARE TUBE 1-1/2 X 1-1/2 X 1/	01 Soil Remediation		N		FT	15.000
1	005	00-ST-SQT2X2X1/4	SQUARE TUBE 2 X 2 X 1/4"	01 Soil Remediation		N		FT	12.000
1	006	00-IF-LR6304FAC15	BAG FILTER 4" CARBON STEEL (6)	01 Soil Remediation		N		EA	2.000
1	007	00-IF-PO10P2SH	FILTER BAGS, 10 MICRON #2 7X32	01 Soil Remediation		N		EA	25.000
1	008	04-WP-3196 MTI 3X4	PUMP GOULDS 3196 MTi 3X4-8G 40	01 Soil Remediation		N		EA	1.000
1	009	00-FM-VM04QE03F-E1	FLOW METER 4" 40-400GPM 4-20mA	01 Soil Remediation		N		EA	1.000
1	010	00-GU-451130SL-30#	DIFF PRESS 0-30 45-1130SL-25-S	01 Soil Remediation		N		EA	2.000
1	011	00-GU-45-1259-100#	PRESS GAGE 0-100 ASCRFT 45-125	01 Soil Remediation		N		EA	2.000
1	012	00-VA-4" BUTTERFLY	BUTTERFLY VALVE 4" GEAR LUG EP	01 Soil Remediation		N		EA	5.000
1	013	00-PF-4 F	FLANGE, 4" WELD-ON (SLIP) 150#	01 Soil Remediation		N		EA	21.000
1	014	00-PF-4X6 EXP JNTS	EXPANSION JOINTS 4"X6" EPDM RB	01 Soil Remediation		N		EA	1.000
1	015	00-PF-3 FLNG SLIP	FLANGE 3 150# CS RF SLIP ON	01 Soil Remediation		N		EA	1.000
1	016	00-PF-4X3 RB WELD	REDUCER BUSHING 4X3" CS STD CO	01 Soil Remediation		N		EA	1.000
1	017	00-ST-PIPEB4SCHD40	STEEL PIPE,BLACK,4 in,SCHED 40	01 Soil Remediation		N		FT	15.000
1	018	00-PF-4 90	ELBOW 4" 90 CS STD LR WELD	01 Soil Remediation		N		EA	7.000
1	019	00-PF-4 T	TEE,4" CS STD WELD	01 Soil Remediation		N		EA	2.000
1	020	00-EX-IMC-1/2	CONDUIT IMC 1/2"	03 Electrical		N		FT	10.000
1	021	00-EX-IMC1	CONDUIT IMC 1"	03 Electrical		N		FT	4.000
1	022	00-EF-1/2-UA	CONDUIT, FLEX 1/2"	03 Electrical		N		FT	10.000
1	023	00-EF-1-UA	CONDUIT, FLEX 1"	03 Electrical		N		FT	3.000
1	024	00-EF-K05091	FITTING, 1/2 90 LIQUIDTITE	03 Electrical		N		EA	6.000
1	025	00-EF-K0501	FITTING, 1/2" STRAIGHT LIQUIDT	03 Electrical		N		EA	2.000
1	026	00-EF-K10041	FITTING, 1" 45 LIQUIDTITE	03 Electrical		N		EA	2.000
1	027	00-EF-K10091	FITTING, 1" 90 LIQUID-TIGHT	03 Electrical		N		EA	1.000
1	028	00-EF-K1001	FITTING, 1" STRAIGHT LIQUIDITE	03 Electrical		N		EA	1.000

** END OF REPORT **

Warehouse 15 *** INDENTED B.O.M. REPORT *** Batch Qty. 1

From CQ14508R5 WATER to CQ14508R5 WA Scrap/Yield OFF

Level	Seq	Stock Code	Description	Category Code/Description	Scrap/ Yield %	Inst.	Lead Time	U/M	Usage Qty.
**Top Assembly*		15-CQ14508R5 WATER	CONTROL PANEL TRT WATER CB&I K	03 Electrical	100.00	N			
1	001	00-EB-N412363612C	ENCLOSURE SUBPANEL,SWNG DR,PAD	03 Electrical		N		EA	1.000
1	002	00-EB-NP3636C	SUB PANEL WIEGMANN	03 Electrical		N		EA	1.000
1	003	00-EB-N412MFK	FOOT KIT	03 Electrical		N		EA	1.000
1	004	00-EB-N41214TWPL	HANDLE, WING PDLK	03 Electrical		N		EA	2.000
1	005	00-EB-N412121206C	ENCLOSURE 12X12X6	03 Electrical		N		EA	1.000
1	006	00-EB-NP1212C	SUB-PANEL 12X12	03 Electrical		N		EA	1.000
1	007	00-VFD-20BD065A0AY	VAR FRQ PWRFLX 65A 50HP 20BD06	03 Electrical		N		EA	1.000
1	008	00-VFD-1321-3R80-C	LINE REACTOR 80A ALLEN BRADLEY	03 Electrical		N		EA	1.000
1	009	00-VFD-20HIMA3	HIM MODULE LCD DISPLAY NUMERIC	03 Electrical		N		EA	1.000
1	010	00-VFD-20COMM-ER	COMMUNICATIONS CARD A-B DUAL-P	03 Electrical		N		EA	1.000
1	011	00-EC-G3P-080	CIRCUIT BREAKER MCCB 80A 3P 48	03 Electrical		N		EA	1.000
1	012	00-EH-4WT46	FAN FOR PANELS 115 CFM 115V	03 Electrical		N		EA	1.000
1	013	00-EH-4YD78	FILTER GUARD ASSY, ALUM 4-45/6	03 Electrical		N		EA	2.000
1	014	00-EH-3RP12	CORDSET, AXIAL FAN, 36"	03 Electrical		N		EA	1.000
1	015	00-EC-GDL 1	FUSE,1AMP, FERRAZ SHAWMUT	03 Electrical		N		EA	1.000
1	016	00-EC-57.904.6355	FUSEHOLDER 1P GLASS ABB	03 Electrical		N		ea	1.000
1	017	00-EC-011419-00	THERMOSTAT, 32-140F N.O. DIN M	03 Electrical		N		EA	1.000
1	018	00-EC-1D374	GROUND BAR KIT PK7GTA	03 Electrical		N		EA	1.000
1	019	00-PS-A1F-O-SS-1-2	PRESSURE SWITCH 4-75 PSIG	03 Electrical		N		EA	1.000
1	020	00-PS-A-447	WEATHERPROOF HOUSING A1F PRESS	03 Electrical		N		EA	1.000

** END OF REPORT **

Warehouse 14 *** INDENTED B.O.M. REPORT *** Batch Qty. 1

From AQ14508R5 to AQ14508R5 Scrap/Yield OFF

Level	Seq	Stock Code	Description	Category Code/Description	Scrap/ Yield %	Inst.	Lead Time	U/M	Usage Qty.
**Top Assembly*		14-AQ14508R5	AC-15LX CB&I KIRTLAND AFB, NM	04 Distributed Goods	100.00	N			
1	001	04-MA-AC-15 LX	MATTEI COMPRESSOR 20HP 460/3/6	04 Distributed Goods		N		EA	1.000
1	002	04-FR-4959K5	REGULATOR, AIR 1" W/PRESS GAUG	01 Soil Remediation		N		EA	1.000
1	003	04-FR-4959K999A	PARTICULATE FILTER F17-800-M3D	01 Soil Remediation		N		EA	1.000
1	004	04-FR-4959K999B	COALESCING FILTER F46-801-M0DA	01 Soil Remediation		N		EA	1.000
1	005	00-PF-G-1 CN	NIPPLE, 1" GALV CLOSE	01 Soil Remediation		N		ea	3.000
1	006	00-PF-G-1 90	ELBOW, 1" GALV	01 Soil Remediation		N		ea	1.000
1	007	00-PF-G-1 U	UNION, 1" GALV	01 Soil Remediation		N		ea	1.000
1	008	00-PF-G-1X3 N	NIPPLE, 1X3 GALV	01 Soil Remediation		N		ea	3.000

** END OF REPORT **

Fliteway Technologies, Inc.

Submittal Drawings

2129 East Birchwood Ave. Cudahy, WI 53110

(414) 483-5600 1-800-236-3580 FAX (414) 483-1957

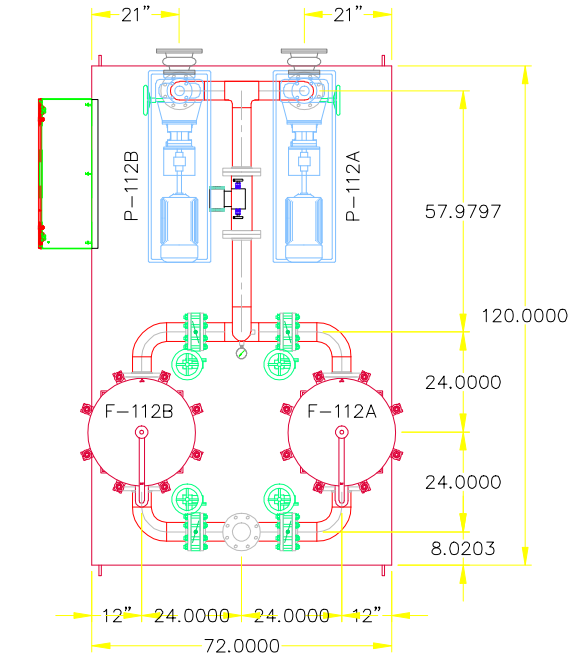

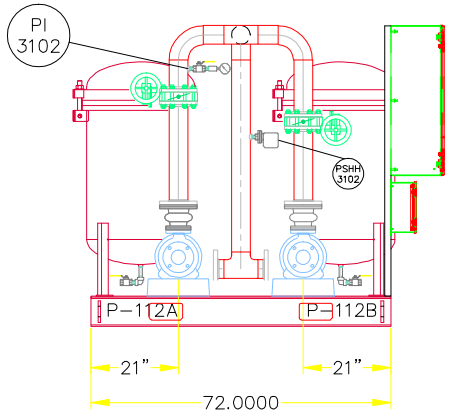

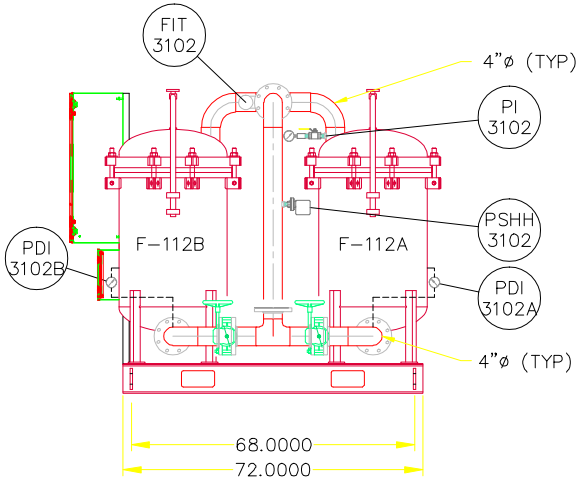

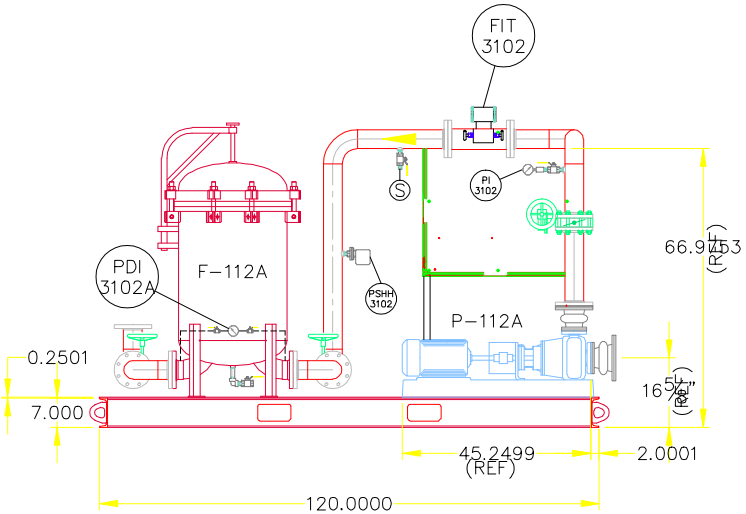

THIS DRAWING IS THE PROPERTY OF
Fliteway Technologies, Inc
2129 EAST BIRCHWOOD AVE
CUDAHY WI, 53110
414.483.5600 414.483.1957

AND IS NOT TO BE REPRODUCED WITHOUT WRITTEN PERMISSION

3/19/15

6'X10' FEED PUMP SKID

CB&I WATER TREATMENT

SIZE	FSCM NO.	DWG NO. Q14508
SCALE NONE		SHEET 1 OF 1

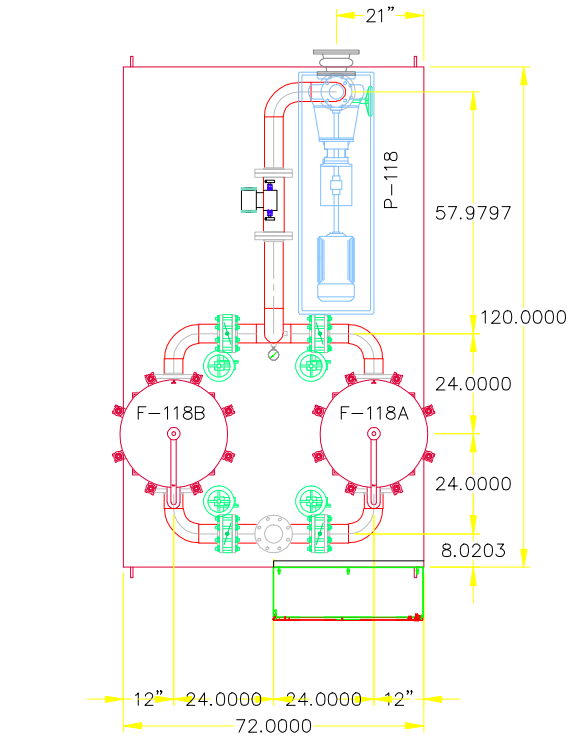

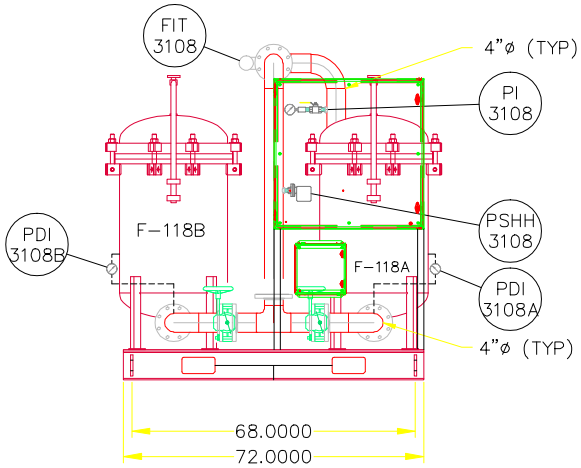

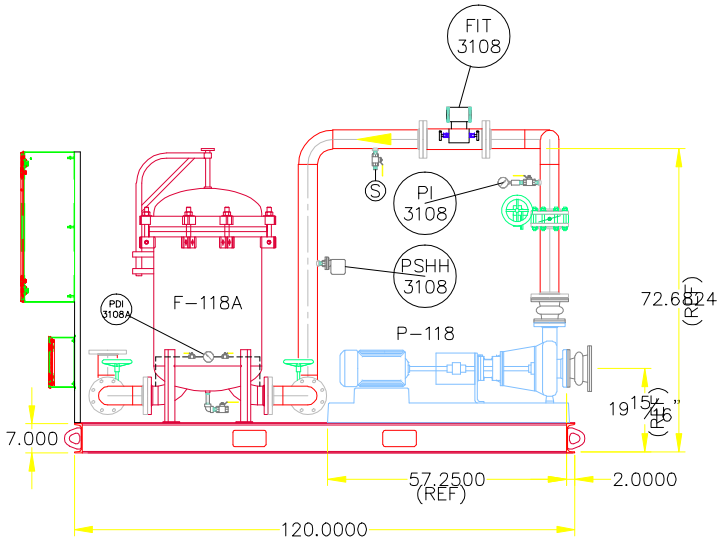

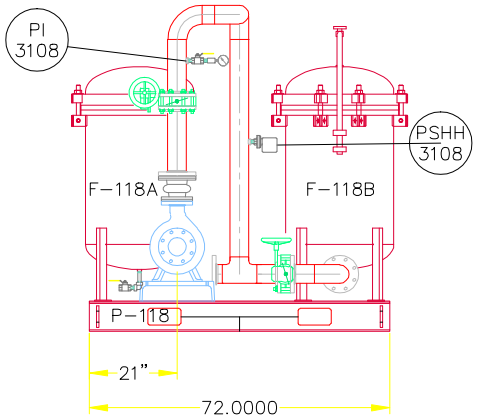

THIS DRAWING IS THE PROPERTY OF
Fliteway Technologies, Inc
2129 EAST BIRCHWOOD AVE
CUDAHY WI, 53110
414.483.5600 414.483.1957

AND IS NOT TO BE REPRODUCED WITHOUT WRITTEN PERMISSION

6'X10' TREATED WATER PUMP SKID

CB&I WATER TREATMENT

3/19/15	SIZE	FSCM NO.	DWG NO. Q14508
	SCALE NONE		SHEET 1 OF 1

FEED PUMP SKID

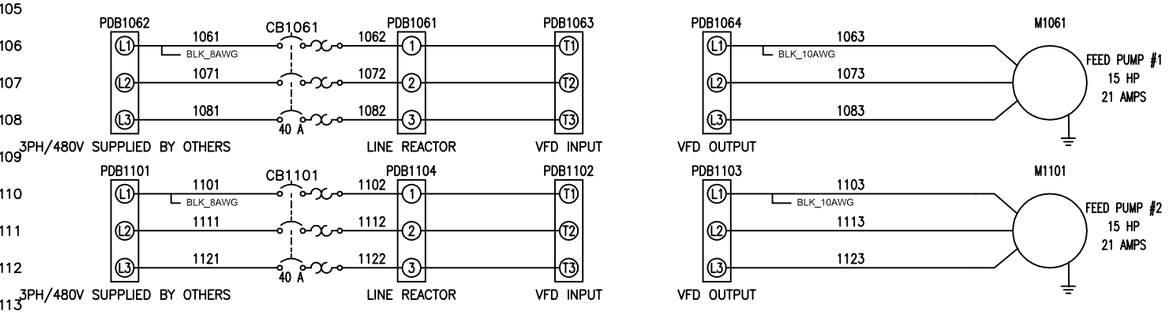

HIGH VOLTAGE PANEL

VFD FEED PUMP #1 WIRING

VFD TB 12	
VFD TB 13	VFD FAULT - PROVIDED OVER ETHERNET
VFD TB 15	
VFD TB 16	VFD RUNNING - PROVIDED OVER ETHERNET
VFD TB 25	N
VFD TB 28	120VAC VFD RUN SIGNAL (FROM MCP)

VFD FEED PUMP #2 WIRING

VFD TB 12	
VFD TB 13	VFD FAULT - PROVIDED OVER ETHERNET
VFD TB 15	
VFD TB 16	VFD RUNNING - PROVIDED OVER ETHERNET
VFD TB 25	N
VFD TB 28	120VAC VFD RUN SIGNAL (FROM MCP)

LOW VOLTAGE JUNCTION BOX

LOW VOLTAGE JBOX

HHL F/S	120VAC OR 24VDC CONTROL POWER
HHL F/S	TANK HHL ALARM (DRY CONTACT)
LL F/S	
LL F/S	TANK LLL (DRY CONTACT)
PRS. SW	
PRS. SW	HIGH PRESSURE SWITCH ALARM (N.O. DRY CONTACT)
FLOW METER	24VDC CONTROL POWER
FLOW METER	FLOW METER 4-20mA SIGNAL
FLOW METER	FLOW METER SHIELD WIRE
P1 THRM OL	120VAC CONTROL POWER
P1 THRM OL	FEED PUMP #1 MOTOR THERMAL OVERLOAD WIRED TO VFD, VIEWED OVER ETHERNET
P2 THRM OL	
P2 THRM OL	FEED PUMP #2 MOTOR THERMAL OVERLOAD WIRED TO VFD, VIEWED OVER ETHERNET
LVL TRANS	24VDC CONTROL POWER
LVL TRANS	LEVEL TRANSMITTER 4-20mA SIGNAL
LVL TRANS	LEVEL TRANSMITTER SHIELD WIRE

TREAT WATER PUMP SKID

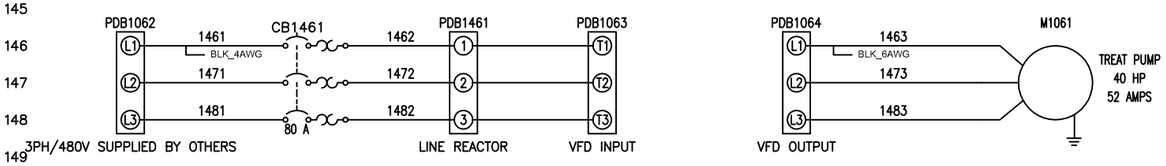

HIGH VOLTAGE PANEL

VFD TREAT PUMP WIRING

VFD TB 12	
VFD TB 13	VFD FAULT - PROVIDED OVER ETHERNET
VFD TB 15	
VFD TB 16	VFD RUNNING - PROVIDED OVER ETHERNET
VFD TB 25	N
VFD TB 28	120VAC VFD RUN SIGNAL (FROM MCP)

LOW VOLTAGE JUNCTION BOX

LOW VOLTAGE JBOX

HHL F/S	120VAC OR 24VDC CONTROL POWER
HHL F/S	TANK HHL ALARM (DRY CONTACT)
LL F/S	
LL F/S	TANK LLL (DRY CONTACT)
PRS. SW	
PRS. SW	HIGH PRESSURE SWITCH ALARM (N.O. DRY CONTACT)
FM 24V	24VDC CONTROL POWER
FM TR	FLOW METER 4-20mA SIGNAL
FM S	FLOW METER SHIELD WIRE
TP THRM OL	120VAC CONTROL POWER
TP THRM OL	TREATMENT PUMP MOTOR THERMAL OVERLOAD WIRED TO VFD, VIEWED OVER ETHERNET
LVL TRANS	24VDC CONTROL POWER
LVL TRANS	LEVEL TRANSMITTER 4-20mA SIGNAL
LVL TRANS	LEVEL TRANSMITTER SHIELD WIRE

THIS PRINT AND ITS CONTENTS ARE THE PROPERTY OF FLITEWAY AND MUST NOT BE USED FOR ANY PURPOSE NOT AUTHORIZED BY FLITEWAY. DO NOT DISCLOSE, REPRODUCE OR OTHERWISE USE THIS PRINT OR ITS CONTENTS IN ANY MANNER DETRIMENTAL TO THE INTEREST OF FLITEWAY WITHOUT FLITEWAY'S PRIOR WRITTEN CONSENT. FLITEWAY RESERVES ALL RIGHTS OF DESIGN AND INVENTION TO THE EXTENT PERMITTED BY LAW.

CAD SYSTEM ACADE	UNITS IN	Fliteway Technologies, Inc. 2129 East Birchwood Ave. Cudahy, WI 53110	DRAWN BY Josh	Q # Q14508	DESCRIPTION AS BUILT
SCALE 1:1	FORMAT D		DESIGNED FOR CB&I Federal Services		Drawing Number PAGE 1 OF 1

PLOTTED: 09-16-2015

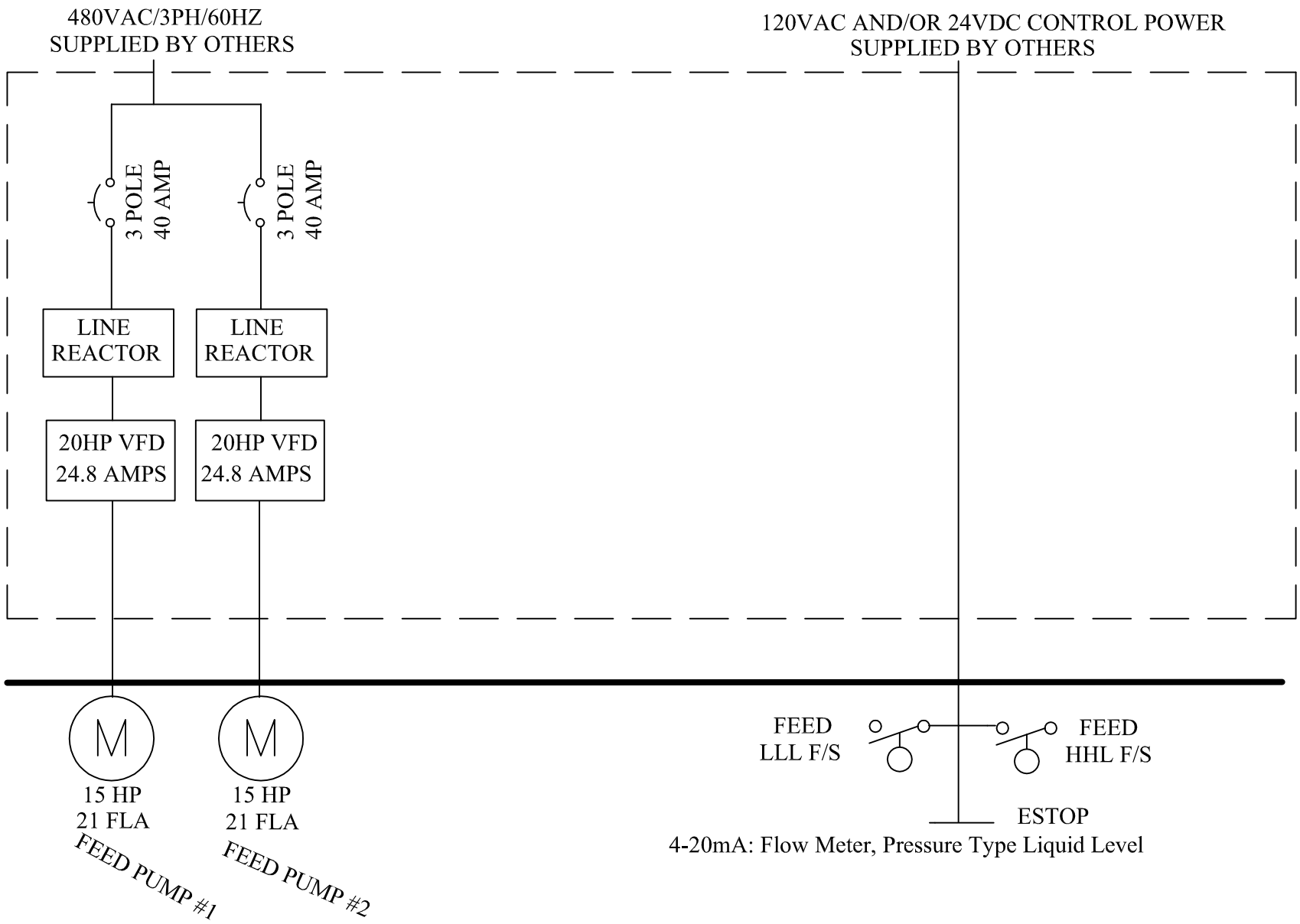

THIS DRAWING IS THE PROPERTY OF
Fliteway Technologies, Inc
2129 East Birchwood Avenue
Cudahy, WI 53110
414.483.5600 414.483.1957
AND IS NOT BE REPRODUCTED
WITH OUT WRITTEN PREMISSION

ONE LINE ELECTRICAL DIAGRAM

FEED PUMP SKID

03/23/15

CB&I Federal Services

SIZE	FSCM NO.	DWG NO.	REV
		Q14508	5
SCALE NONE			SHEET

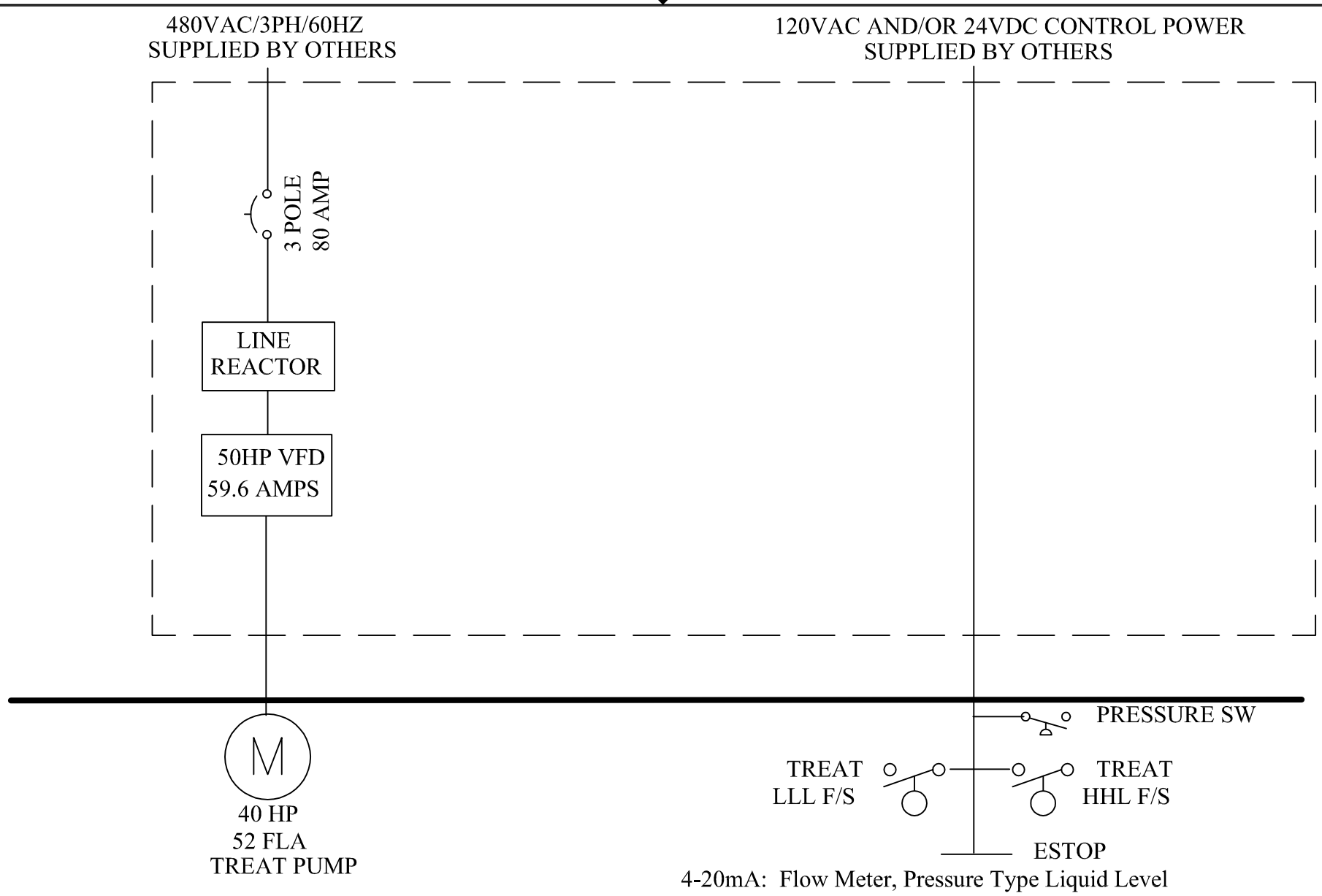

THIS DRAWING IS THE PROPERTY OF
Fliteway Technologies, Inc
2129 East Birchwood Avenue
Cudahy, WI 53110
414.483.5600 414.483.1957
AND IS NOT BE REPRODUCTED
WITH OUT WRITTEN PREMISSION

ONE LINE ELECTRICAL DIAGRAM

TREAT PUMP SKID

03/23/15

CB&I Federal Services

SIZE	FSCM NO.	DWG NO.	REV
		Q14508	5
SCALE NONE			SHEET

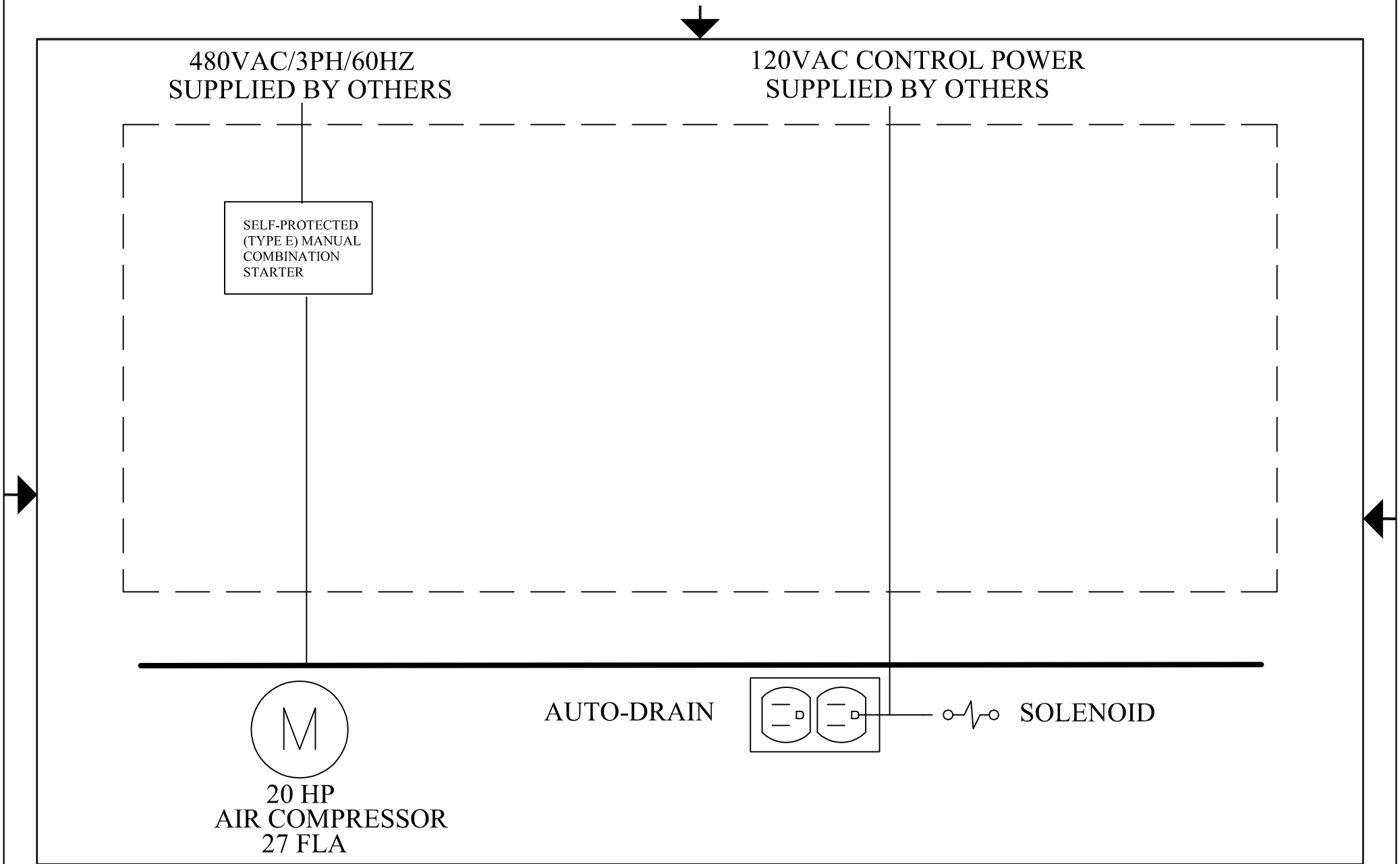

THIS DRAWING IS THE PROPERTY OF
Fliteway Technologies, Inc
2129 East Birchwood Avenue
Cudahy, WI 53110
414.483.5600 414.483.1957
AND IS NOT BE REPRODUCTED
WITH OUT WRITTEN PREMISSION

ONE LINE ELECTRICAL DIAGRAM

COMPRESSORSKID

03/23/15

CB&I Federal Services

SIZE	FSCM NO.	DWG NO.	REV
		Q14508	5
SCALE NONE			SHEET

Fliteway Technologies, Inc.

Test Data

2129 East Birchwood Ave. Cudahy, WI 53110

(414) 483-5600 1-800-236-3580 FAX (414) 483-1957

VFd tested OK

Pressure tested @ 15 psi no Leaks SJH

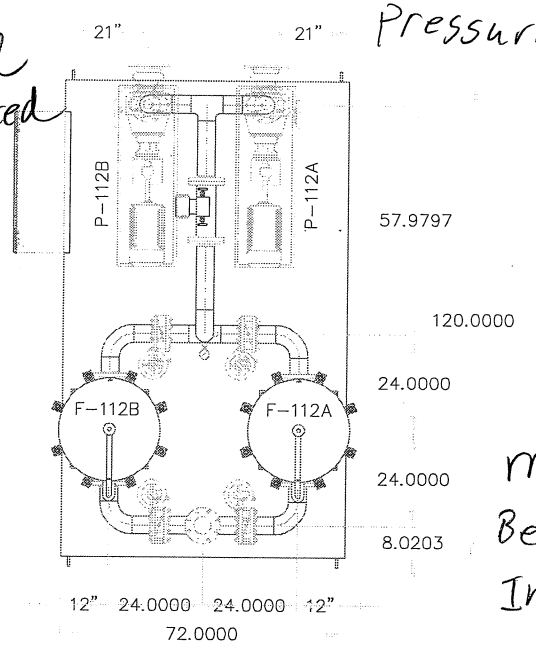

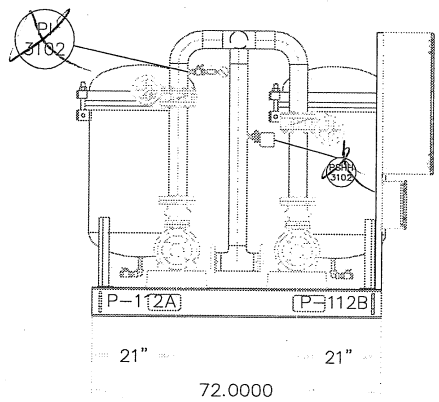

motor Rotation needs to Be checked Before couplers are Installed.

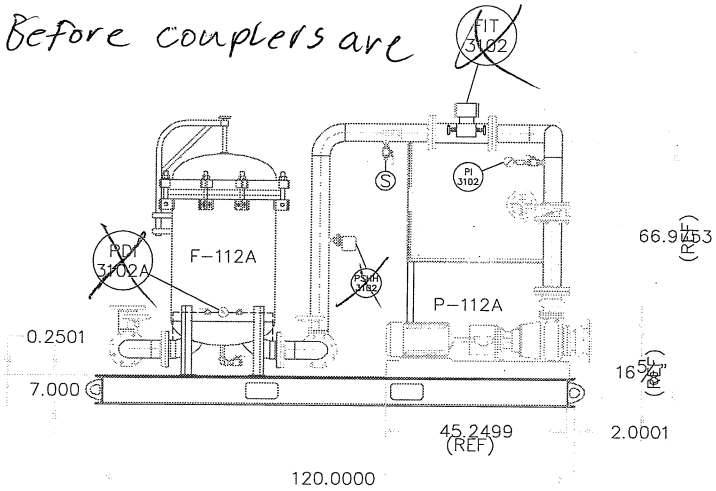

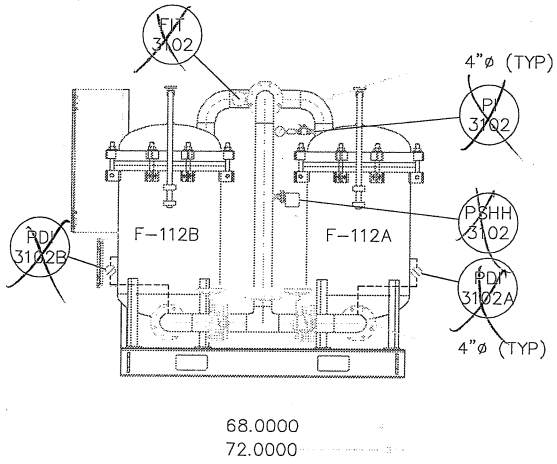

tested By: Sean Higgins 01 July 15

THIS DRAWING IS THE PROPERTY OF Fliteway Technologies, Inc 2129 EAST BIRCHWOOD AVE CUDAHY WI, 53110 414.483.5600 414.483.1957 AND IS NOT TO BE REPRODUCED WITHOUT WRITTEN PERMISSION	6'X10' FEED PUMP SKID		
	CB&I WATER TREATMENT		
3/19/15	SIZE	FSCM NO.	DWG NO. Q14508
	SCALE NONE		SHEET 1 OF 1

Pressure tested @ 15PSI no leaks SJH

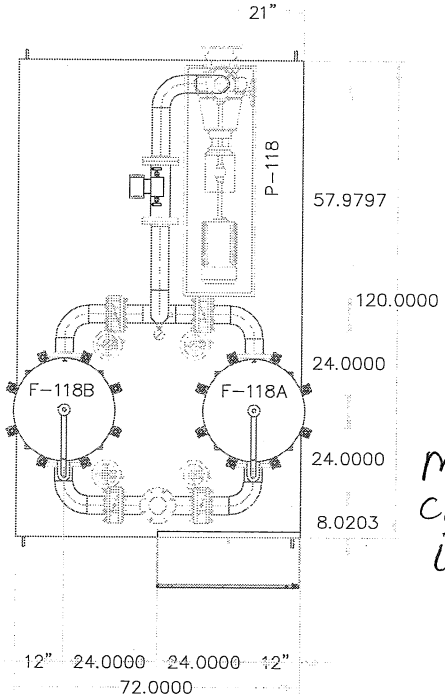

VFD tested OK

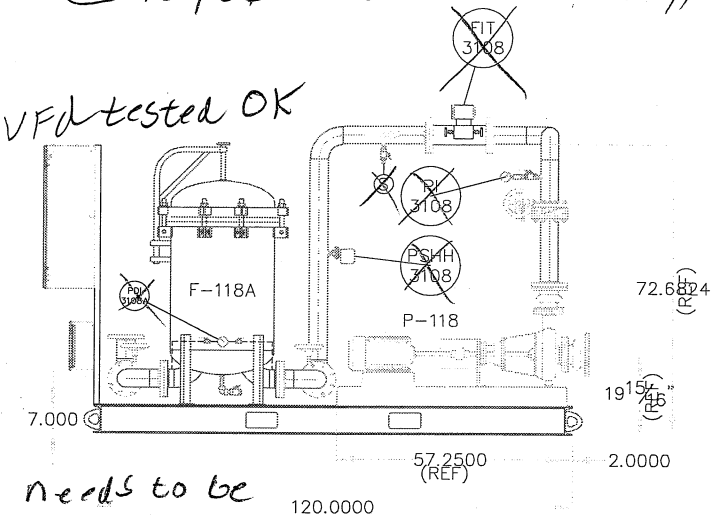

Motor rotation needs to be checked before couplers are installed

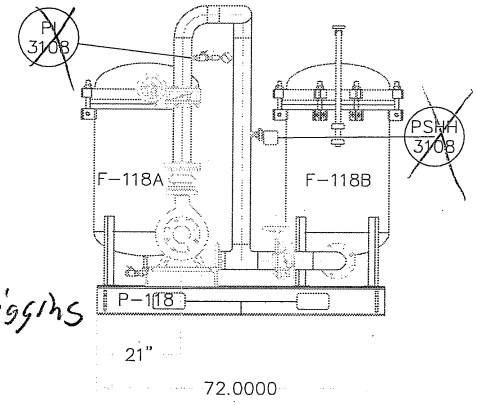

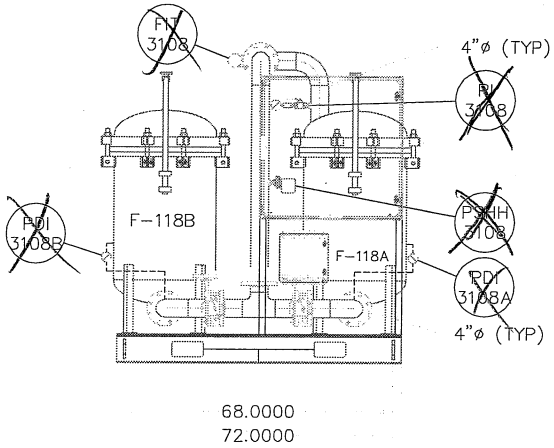

tested By: Sean Higgins
01 July 15

THIS DRAWING IS THE PROPERTY OF Fliteway Technologies, Inc 2129 EAST BIRCHWOOD AVE CUDAHY WI, 53110 414.483.5600 414.483.1957 AND IS NOT TO BE REPRODUCED WITHOUT WRITTEN PERMISSION	6'X10' TREATED WATER PUMP SKID
	CB&I WATER TREATMENT
3/19/15	SIZE / FSCM NO. / DWG NO. Q14508
	SCALE NONE / SHEET 1 OF 1

Fliteway Technologies, Inc.

Groundwater Treatment Feed Tank

2129 East Birchwood Ave. Cudahy, WI 53110

(414) 483-5600 1-800-236-3580 FAX (414) 483-1957

6000 GAL. WATER STORAGE TANKS (T-110 & T-116)
(10.17'DIA. x 11'HGT.) AWWA-D100-11
FOR
EDB INTERIM MEASURE
KIRTLAND, AFB

TANK – DRAWING LOG

INDEX	DWG #	CUST DWG #	DESCRIPTION	REVISION #	STATUS	DATE
1	CS01		COVER SHEET	2	P	04/14/2015
2	E01		GENERAL ARRANGEMENT	1	P	03/23/2015
3	E02		TANK ORIENTATION	2	P	04/14/2015
4	E03		SHELL LAYOUT	2	P	04/14/2015
5	E04		X-RAY MAP	1	P	03/23/2015
6	E05		SHELL WELD MAP	1	P	03/23/2015
7	E06		BOTTM WELD MAP	1	P	03/23/2015
8	E07		ROOF WELD MAP	1	P	03/23/2015
9	E08		DIESEL TEST VACUUM	1	P	03/23/2015
10	E09		WELD MAP	2	P	04/14/2015
11	BL01		BOTTOM LAYOUT	1	P	03/23/2015
12	BL02		BOTTOM PLATE	1	P	03/23/2015
13	RL01		ROOF LAYOUT	1	P	03/23/2015
14	RL02		ROOF PLATE DETAILS	1	P	03/23/2015
15	TM01		TOP MEMBER	1	P	03/23/2015
16	PL01		SHELL COURSE PLATES	1	P	03/23/2015
17	SM01	I	24" SHELL MANWAY	1	P	03/23/2015
18	SN01	E	6" DISCHARGE NOZZLE	2	P	04/14/2015
19	SN02	G	4" LEVEL NOZZLE	2	P	04/14/2015
20	SN03	F	2" DRAIN NOZZLE	2	P	04/14/2015
21	SN04	H	4" LEVEL NOZZLE	2	P	04/14/2015
22	SN05	J	2" LEVEL NOZZLE	2	P	04/14/2015
23	SN06	K	4" SPARE NOZZLE	2	P	04/14/2015
24	SN07	L	4" SPARE NOZZLE	2	P	04/14/2015
25	SN08	M	6" SPARE NOZZLE	2	P	04/14/2015
26	RN01	A	6" FILL NOZZLE	2	P	04/14/2015
27	RN02	B	6" FILL NOZZLE	2	P	04/14/2015
28	RN03	C	6" VENT NOZZLE	2	P	04/14/2015
29	RN04	D	6" SPARE NOZZLE	2	P	04/14/2015
30	LL01		LIFTING LUGS	1	P	03/23/2015
31	NP01		NAMEPLATE & G. LUGS	1	P	03/23/2015

STATUS CODE

STATUS	DESCRIPTION
P	PRELIMINARY
A	APPROVED
REF	REFERENCE ONLY
R	RESENT TO CUSTOMER
D	DONE

REV.	BY	DATE	DESCRIPTION
2	MEM	04/14/2015	REVISE FLANGE FACE
1	EJ	03/23/2015	UPDATED TANK -- DRAWING LOG REVISED TITLE BLOCK
0	EJ	02/16/2015	INITIAL ISSUE

BMT ACQUISITION, LLC
ENGINEERS – FABRICATORS – CONSTRUCTORS
8301 BROADWAY BLVD SE
ALBUQUERQUE, NM 87105-7453
PHONE: 505-563-4800
FAX: 505-563-4799
http://www.bmt-tank.com

T-110
&
T-116

COVER SHEET
6,000 GAL. WATER STORAGE TANKS
(10.17'DIA. X 11'HGT.) AWWA-D100-11

CUSTOMER:
FLITEWAY TECH., INC

PROJECT:
EDB INTERIM MEASURE

DRAWN: EJ
CHECKED: GAV
DATE: 02/16/2015
REVISION: 2
JOB No.: 30883
SHEET No.: CS01

DESIGN PARAMETERS

GOVERNING STANDARD:	AWWA-D-100	INTERNAL PRESSURE:	0 PSI	MIN. DESIGN METAL TEMP.:	25 °F	C.A. SHELL:	0 IN	RADIOGRAPH:	SPOT PER CODE
EDITION:	11TH EDITION	EXTERNAL PRESSURE:	0 PSI	JOINT EFFICIENCY:	0.85	C.A. BOTTOM:	0 IN	ANCHORAGE:	NONE
APPENDIX(ICS):		SPECIFIC GRAVITY:	1.0	BOTTOM SEAMS:	LWTSO	C.A. ROOF:	0 IN	WINDGIRDER:	NONE
CAPACITY TO TOP OF SHELL:	6679 GALLONS	WIND:	E= C I= 1.15 V= 100 MPH	FIXED ROOF SEAMS:	LWTSO	C.A. STRUCTURE:	0 IN	WORKING CAPACITY:	6123 GALLONS
DESIGN LIQUID LEVEL:	10.08 FT	SEISMIC:	SUG= 3 SC= D TL= 6.0 Ss= 0.47 S1= 0.14	FLOATING ROOF SEAMS:	--			DESIGN BY: GAV	DATE 02/16/2015
MAX OPERATING TEMPERATURE:	100 °F	ALLOWABLE STRESS:	15,000 PSI	SHELL SEAMS	DBW			CHECK BY: GAV	DATE

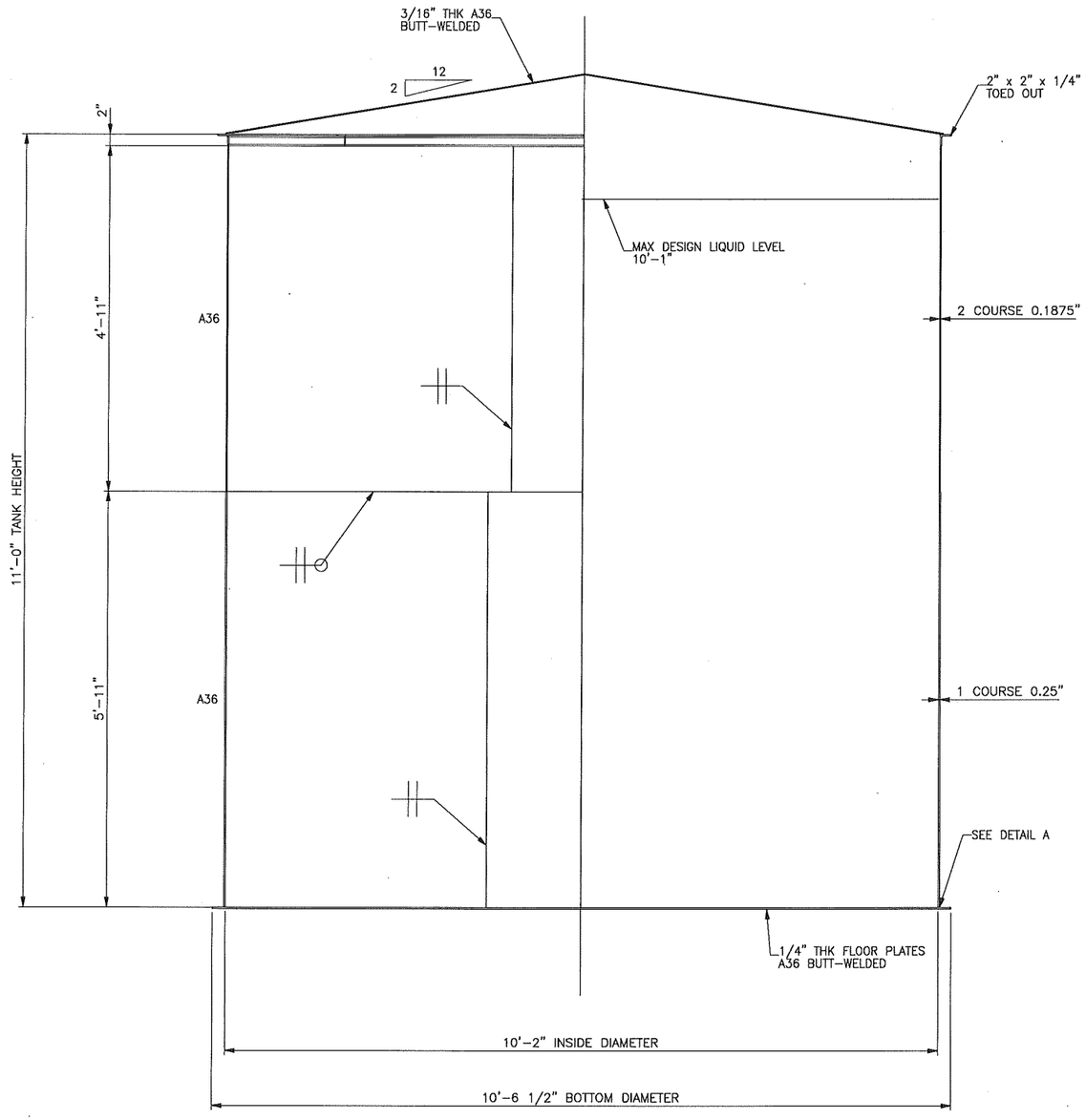

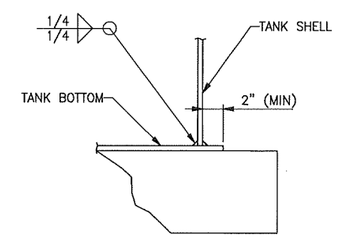

DETAIL A

REV.	BY	DATE	DESCRIPTION
1	EJ	03/23/2015	REVISED TITLE BLOCK
0	EJ	02/16/2015	INITIAL ISSUE

BMT ACQUISITION, LLC
ENGINEERS – FABRICATORS – CONSTRUCTORS

8301 BROADWAY BLVD SE
ALBUQUERQUE, NM 87105-7453
PHONE: 505-563-4800
FAX: 505-563-4799
http://www.bmt-tank.com

T-110 & T-116

GENERAL ARRANGEMENT
6,000 GAL. WATER STORAGE TANKS
(10.17'DIA. X 11'HGT.) AWWA-D100-11

CUSTOMER: FLITEWAY TECH., INC

PROJECT: EDB INTERIM MEASURE

DRAWN: EJ
CHECKED: GAV
DATE: 02/16/2015
REVISION: 1

JOB No.: 30883

SHEET No.: E01

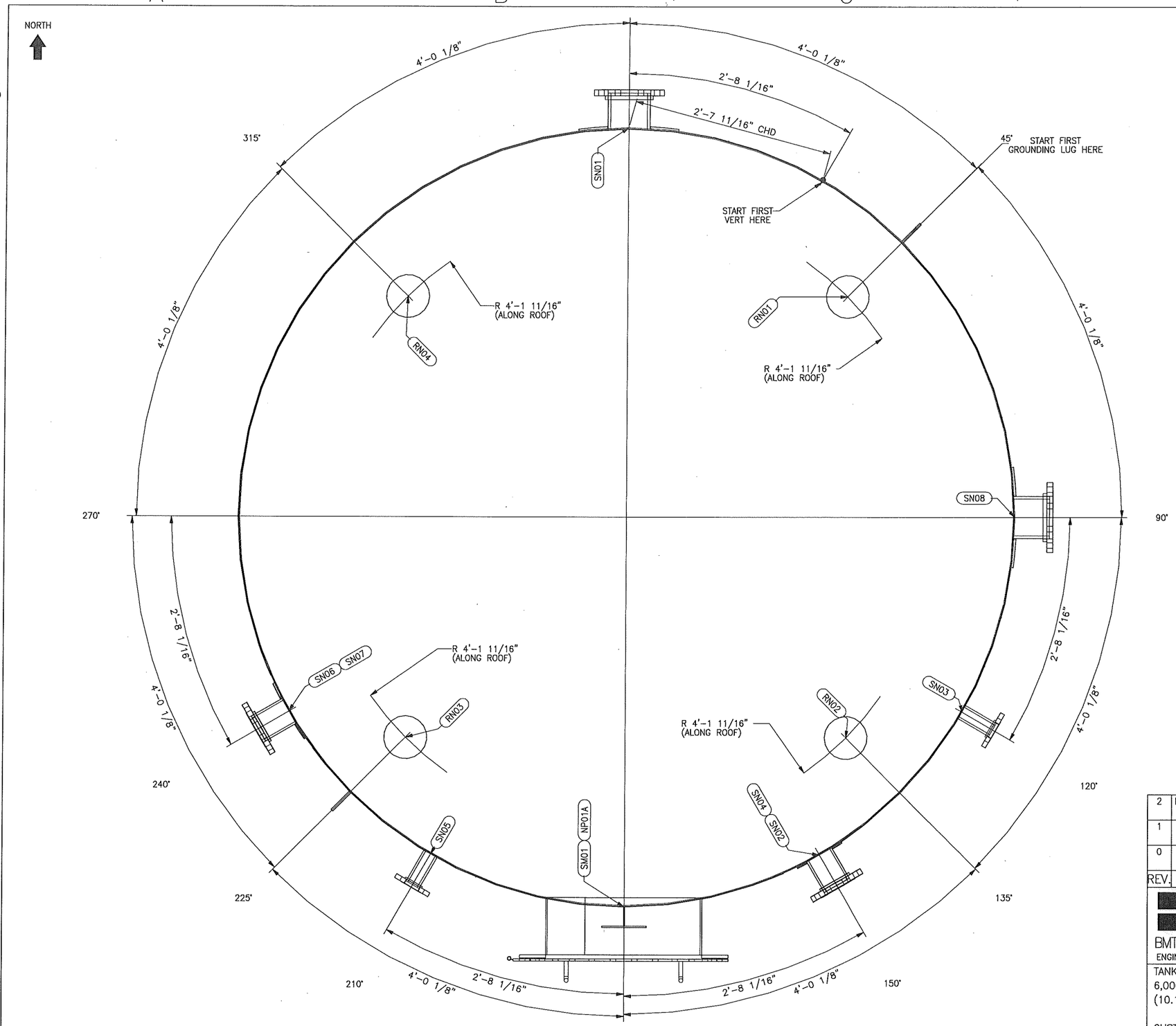

PLAN VIEW APPURTENANCE								
MARK	CUST. MARK	DESCRIPTION	OUTSIDE PROJ	INSIDE PROJ	ORIENT	RADIUS	REMARKS	REF DWG
RN01	A	6" FILL NOZZLE	6"	0"	45°	4'-1"		RN01
RN02	B	6" FILL NOZZLE	6"	0"	135°	4'-1"		RN02
RN03	C	6" VENT NOZZLE	6"	0"	225°	4'-1"		RN03
RN04	D	6" SPARE NOZZLE	6"	0"	315°	4'-1"		RN04

NOTE 1: RADIUS SHOWN IS HORIZONTAL

ELEVATION VIEW APPURTENANCE								
MARK	CUST. MARK	DESCRIPTION	OUTSIDE PROJ	INSIDE PROJ	ORIENT	ELEVATION	REMARKS	REF DWG
NP01A		NAME PLATE	--	--	180°	4'-0"		NP01
NP01B		GROUNDING LUGS	4"	0"	SEE TABLE	1'-0"		NP01
PS01		LIFTING LUG	--	--	120°	10'-6 3/4"		ERROR
PS02		LIFTING LUG	--	--	300°	10'-6 3/4"		ERROR
SM01	I	24" SHELL MANWAY	8"	0"	180°	1'-6"	W/ HINGE	SM01
SN01	E	6" DISCHARGE NOZZLE	6"	0"	0°	1'-0"		SN01
SN02	G	4" LEVEL NOZZLE	6"	0"	150°	8'-4"		SN02
SN03	F	2" DRAIN NOZZLE	6"	0"	120°	6"		SN03
SN04	H	4" LEVEL NOZZLE	6"	0"	150°	2'-1"		SN04
SN05	J	2" LEVEL NOZZLE	6"	0"	210°	2'-1"		SN05
SN06	K	4" SPARE NOZZLE	6"	0"	240°	8'-4"		SN06
SN07	L	4" SPARE NOZZLE	6"	0"	240°	2'-1"		SN07
SN08	M	6" SPARE NOZZLE	6"	0"	90°	1'-0"		SN08

NOTE 2: ELEVATIONS SHOWN FROM TOP OF TANK BOTTOM AT THE LOCATION OF THE APPURTENANCE.

NOTE 3: ARC DIMENSIONS CALCULATED ON THE OUTSIDE OF THE FIRST SHELL COURSE.

NOTE 4: CHORD DIMENSIONS CALCULATED ON OUTSIDE OF THE FIRST SHELL COURSE.

FIRST RING VERTICAL SEAMS		
ANGLE	ARC	CHORD FROM 0 DEG.
30°	2'-8 1/16"	2'-7 3/4"

GROUNDING LUGS		
ANGLE	ARC	ELEV
45°	4'-0 1/8"	1'-0"
225°	20'-0 1/2"	1'-0"

REV.	BY	DATE	DESCRIPTION
2	MEM	04/14/2015	REVISE NOZZLE ORIENTATION
1	EJ	02/16/2015	
0	EJ	02/16/2015	INITIAL ISSUE

BMT ACQUISITION, LLC
ENGINEERS – FABRICATORS – CONSTRUCTORS
8301 BROADWAY BLVD SE
ALBUQUERQUE, NM 87105-7453
PHONE: 505-563-4800
FAX: 505-563-4799
http://www.bmt-tank.com

T-110 & T-116

TANK ORIENTATION
6,000 GAL. WATER STORAGE TANKS
(10.17'DIA. X 11'HGT.) AWWA-D100-11

CUSTOMER: FLITEWAY TECH., INC

PROJECT: EDB INTERIM MEASURE

DRAWN: EJ
CHECKED: GAV
DATE: 02/16/2015
REVISION: 2

JOB No.: 30883

SHEET No.: E02

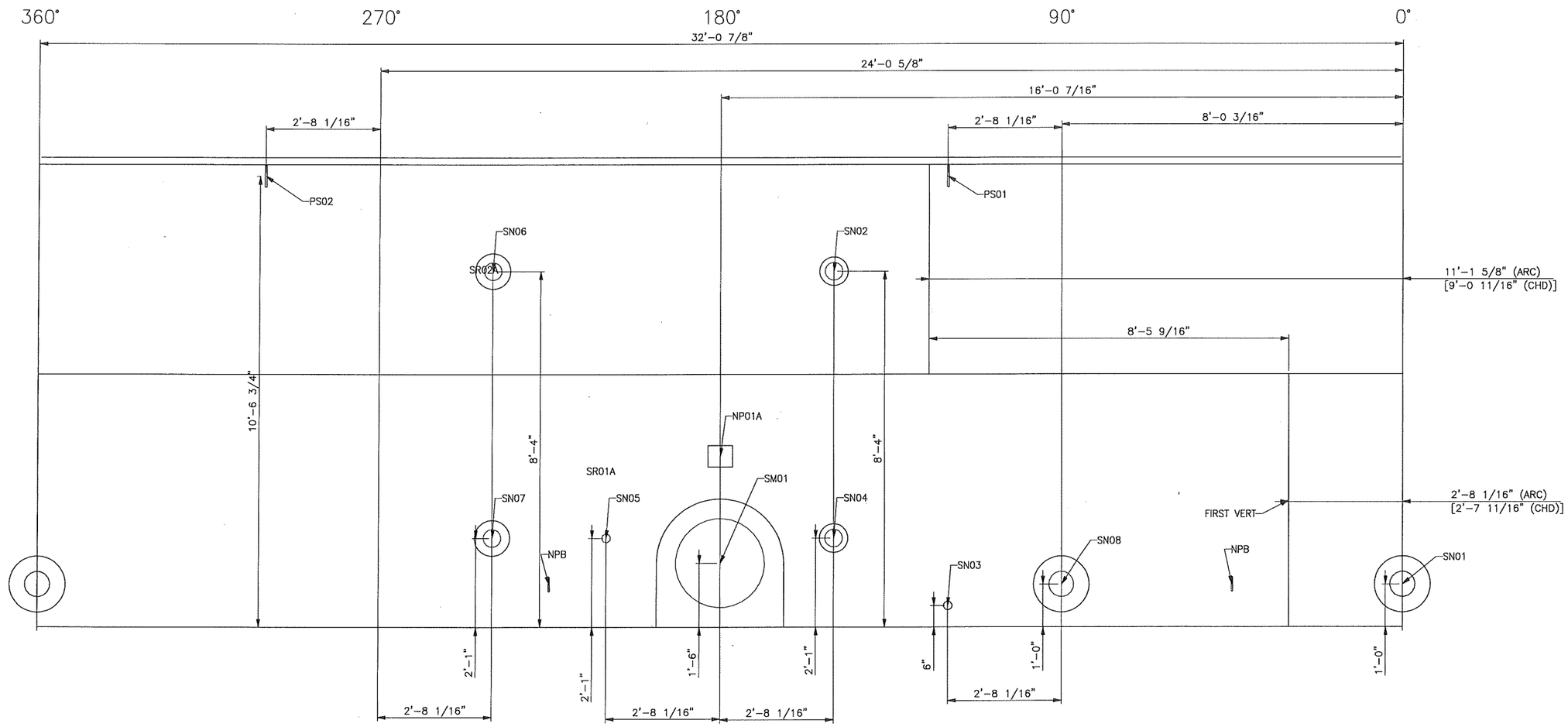

GROUNDING LUGS		
ANGLE	ARC	ELEV
45°	4'-0 1/8"	1'-0"
225°	20'-0 1/2"	1'-0"

ELEVATION VIEW APPURTENANCE

MARK	CUST. MARK	DESCRIPTION	OUTSIDE PROJ	INSIDE PROJ	ORIENT	ELEVATION	REMARKS	REF DWG
NP01A		NAME PLATE	--	--	180°	4'-0"		NP01
NP01B		GROUNDING LUGS	4"	0"	SEE TABLE	1'-0"		NP01
PS01		LIFTING LUG	--	--	120°	10'-6 3/4"		ERROR
PS02		LIFTING LUG	--	--	300°	10'-6 3/4"		ERROR
SM01	I	24" SHELL MANWAY	8"	0"	180°	1'-6"	W/ HINGE	SM01
SN01	E	6" DISCHARGE NOZZLE	6"	0"	0°	1'-0"		SN01
SN02	G	4" LEVEL NOZZLE	6"	0"	150°	8'-4"		SN02
SN03	F	2" DRAIN NOZZLE	6"	0"	120°	6"		SN03
SN04	H	4" LEVEL NOZZLE	6"	0"	150°	2'-1"		SN04
SN05	J	2" LEVEL NOZZLE	6"	0"	210°	2'-1"		SN05
SN06	K	4" SPARE NOZZLE	6"	0"	240°	8'-4"		SN06
SN07	L	4" SPARE NOZZLE	6"	0"	240°	2'-1"		SN07
SN08	M	6" SPARE NOZZLE	6"	0"	90°	1'-0"		SN08

NOTE 1: SHELL PLATE IS TO BE STACKED FLUSH INSIDE.
NOTE 2: ELEVATIONS SHOWN FROM TOP OF TANK BOTTOM AT THE LOCATION OF THE APPURTENANCE.
NOTE 3: ARC DIMENSIONS CALCULATED ON THE OUTSIDE OF THE FIRST SHELL RING.

REV.	BY	DATE	DESCRIPTION
2	MEM	04/14/2015	REVISED NOZZLE ORIENTATINO AND SHELL VERT
1	EJ	03/23/2015	RELOCATED ALL NOZZLES REVISED B.O.M. & TITLE BLOCK
0	EJ	02/16/2015	INITIAL ISSUE

BMT ACQUISITION, LLC
ENGINEERS – FABRICATORS – CONSTRUCTORS
8301 BROADWAY BLVD SE
ALBUQUERQUE, NM 87105-7453
PHONE: 505-563-4800
FAX: 505-563-4799
http://www.bmt-tank.com

T-110 & T-116

SHELL LAYOUT
VIEWED FROM OUTSIDE
6,000 GAL. WATER STORAGE TANKS
(10.17'DIA. X 11'HGT.) AWWA-D100-11
CUSTOMER: FLITEWAY TECH., INC
PROJECT: EDB INTERIM MEASURE

DRAWN: EJ
CHECKED: GAV
DATE: 02/16/2015
REVISION: 2
JOB No.: 30883
SHEET No.: E03

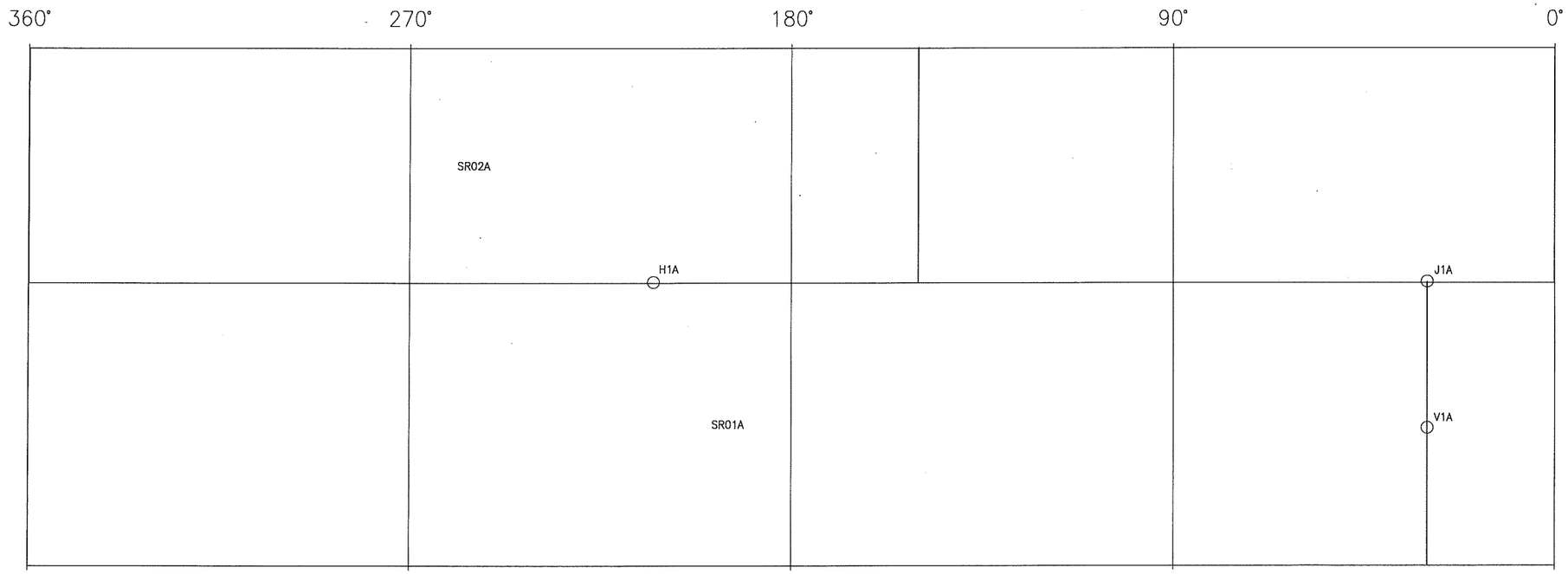

PLATE DIMENSIONS		
PLATE MARK	ARC LENGTH	CHORD LENGTH
SR01A	384 3/4"	1/8"
SR02A	384 1/2"	1/8"

NOTE 1: ARC LENGTHS ARE VERT TO VERT AT OUTSIDE OF SHELL.
NOTE 2: CHORD LENGTHS ARE VERT TO VERT AT OUTSIDE OF SHELL.

X-RAY LIST

WELDER'S NUMBER/NAME	WELDER'S NUMBER/NAME	WELDER'S NUMBER/NAME	WELDER'S NUMBER/NAME

NOTE 1: MANDATORY X-RAYS PER API 650 ARE SHOWN.
NOTE 2: VERTICAL JOINTS REQUIRE AN X-RAY IN THE FIRST 10'-0" FOR EACH WELDER FOR EACH THICKNESS AND, WITHOUT REGARD TO THE NUMBER OF WELDERS, EACH ADDITIONAL 100'-0" OR MAJOR FRACTION OF 100'-0" OF THE SAME THICKNESS.
NOTE 3: HORIZONTAL JOINTS REQUIRE AN X-RAY IN THE FIRST 10'-0" AND ONE X-RAY FOR EACH 200'-0" OR MAJOR FRACTION OF 200'-0" FOR EACH THICKNESS WITHOUT REGARD TO THE NUMBER OF WELDERS.

WELD MARK LEGEND	
MARK	DESCRIPTION
○	X-RAY LOCATION
⊠	X-RAY ACCEPTABLE
●	X-RAY UNACCEPTABLE
● ○	X-RAY REPAIR
● ⊠	REPAIR ACCEPTABLE
+	TRACER LOCATION
✳	TRACER ACCEPTABLE

REV.	BY	DATE	DESCRIPTION
1	EJ	03/23/2015	REVISED TITLE BLOCK
0	EJ	02/16/2015	INITIAL ISSUE

BMT ACQUISITION, LLC
ENGINEERS – FABRICATORS – CONSTRUCTORS
8301 BROADWAY BLVD SE
ALBUQUERQUE, NM 87105-7453
PHONE: 505-563-4800
FAX: 505-563-4799
http://www.bmt-tank.com

T-110 & T-116

X-RAY MAP
VIEWED FROM OUTSIDE
6,000 GAL. WATER STORAGE TANKS
(10.17'DIA. X 11'HGT.) AWWA-D100-11
CUSTOMER: FLITEWAY TECH., INC
PROJECT: EDB INTERIM MEASURE

DRAWN: EJ
CHECKED: GAV
DATE: 02/16/2015
REVISION: 1
JOB No.: 30883
SHEET No.: E04

SEAM	WELDER		REMARKS	SEAM	WELDER		REMARKS
	INSIDE	OUTSIDE			INSIDE	OUTSIDE	
1H1				1V1			
2H1				2V1			

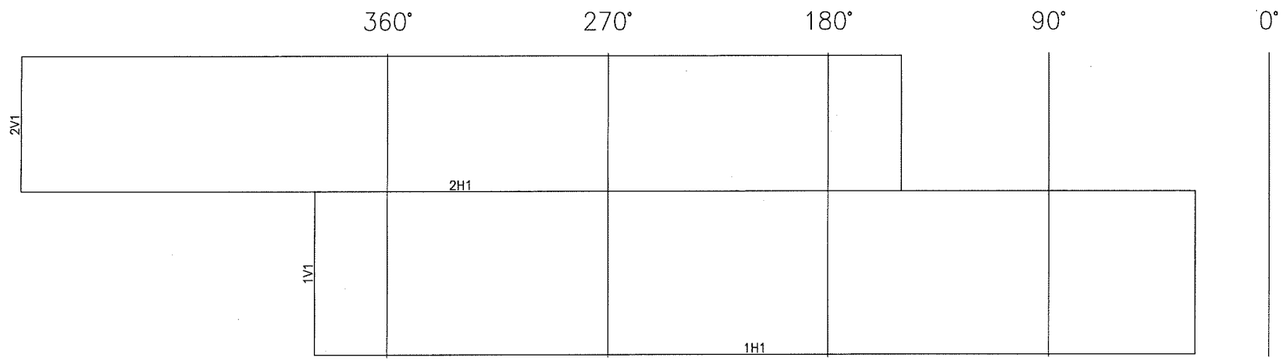

LOOKING FROM OUTSIDE TO INSIDE

POSITION OF WELD
(H– HORIZONTAL)
(V– VERTICAL)

SHELL RING NUMBER → 3 V 12 ← CONSECUTIVE NUMBER TO REPRESENT WELD SEAM FOR THAT SPECIFIC RING AND POSITION.

SEAM IDENTIFICATION KEY

CODE:_____ NOMINAL DIAMETER: 10'–2"

NOMINAL HEIGHT: 11'–0"

FIELD FOREMAN:_____

WELDER:_____ WELDER:_____

WELDER:_____ WELDER:_____

WELDER:_____ WELDER:_____

DATE:_____

REV.	BY	DATE	DESCRIPTION
1	EJ	03/23/2015	REVISED TITLE BLOCK
0	EJ	02/16/2015	INITIAL ISSUE

BMT ACQUISITION, LLC
ENGINEERS – FABRICATORS – CONSTRUCTORS

8301 BROADWAY BLVD SE
ALBUQUERQUE, NM 87105–7453
PHONE: 505–563–4800
FAX: 505–563–4799
http://www.bmt–tank.com

T–110 & T–116

SHELL WELD MAP
ROLL–OUT
6,000 GAL. WATER STORAGE TANKS
(10.17'DIA. X 11'HGT.) AWWA–D100–11
CUSTOMER: FLITEWAY TECH., INC
PROJECT: EDB INTERIM MEASURE

DRAWN: EJ
CHECKED: GAV
DATE: 02/16/2015
REVISION: 1
JOB No.: 30883
SHEET No.: E05

SEAM	WELDER	REMARKS
HS1		

WELDER INFORMATION	
FULL NAME	INITIALS

MARK LOCATIONS	
LEAK	○
REPAIRED	⊠
RETESTED	⊠

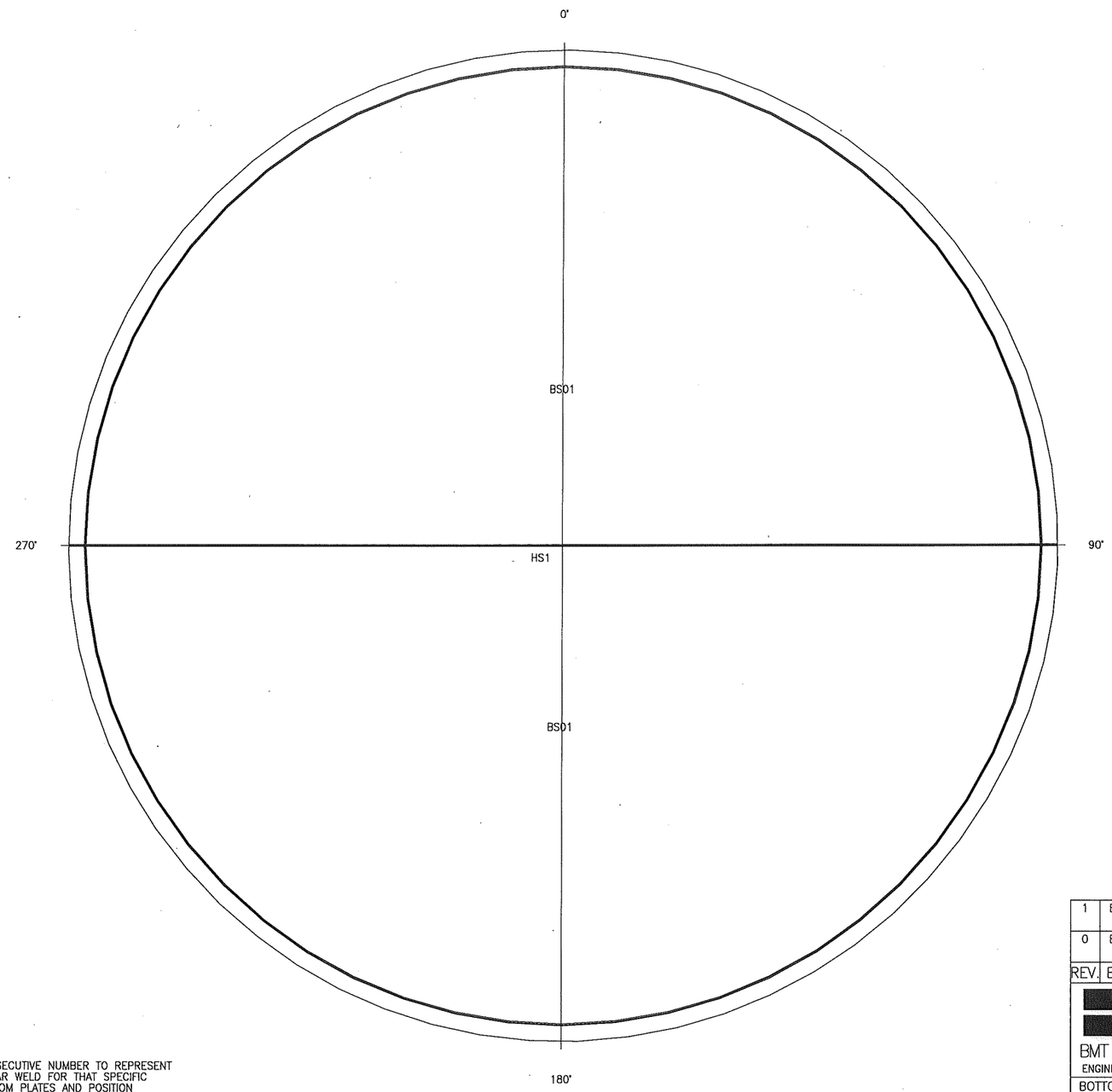

PLAN VIEW

POSITION OF WELD
(H– HORIZONTAL)
(V– VERTICAL)

H 12

CONSECUTIVE NUMBER TO REPRESENT LINEAR WELD FOR THAT SPECIFIC BOTTOM PLATES AND POSITION

SEAM IDENTIFICATION KEY

REV.	BY	DATE	DESCRIPTION
1	EJ	03/23/2015	CHANGED BOTTOM PLATE ORIENTATION REVISED TITLE BLOCK
0	EJ	02/16/2015	INITIAL ISSUE

BMT ACQUISITION, LLC
ENGINEERS – FABRICATORS – CONSTRUCTORS

8301 BROADWAY BLVD SE
ALBUQUERQUE, NM 87105–7453
PHONE: 505–563–4800
FAX: 505–563–4799
http://www.bmt-tank.com

T–110
&
T–116

BOTTOM WELD MAP
6,000 GAL. WATER STORAGE TANKS
(10.17'DIA. X 11'HGT.) AWWA–D100–11

CUSTOMER:
FLITEWAY TECH., INC

PROJECT:
EDB INTERIM MEASURE

DRAWN:	JOB No.:
EJ	30883
CHECKED: GAV	
DATE: 02/16/2015	SHEET No.:
REVISION: 1	E06

SEAM	WELDER	REMARKS
VS1		

WELDER INFORMATION	
FULL NAME	INITIALS

MARK LOCATIONS	
LEAK	○
REPAIRED	⊠
RETESTED	⊠

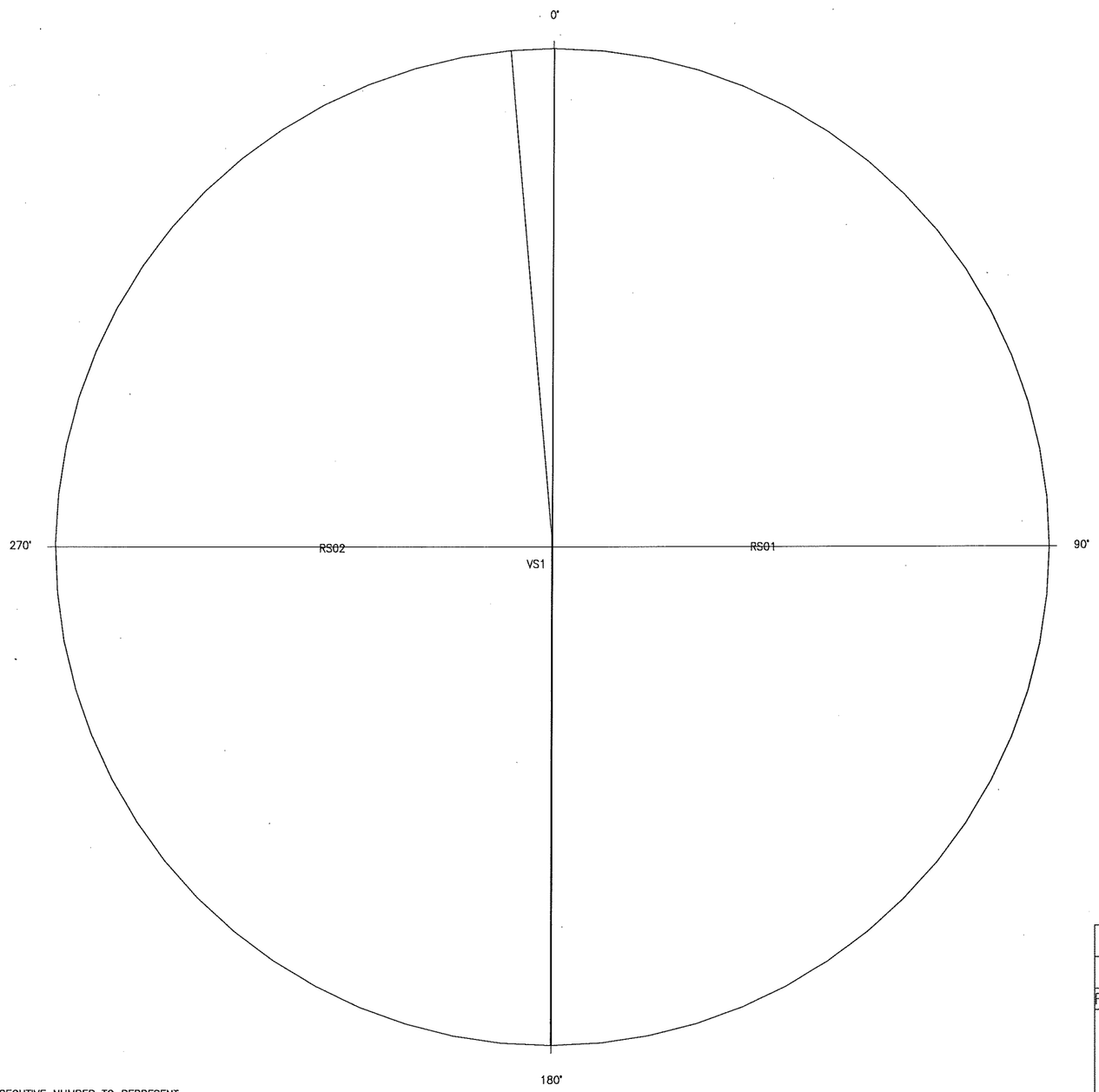

NORTH

PLAN VIEW

POSITION OF WELD
(H– HORIZONTAL)
(V– VERTICAL)

V 12

CONSECUTIVE NUMBER TO REPRESENT LINEAR WELD FOR THAT SPECIFIC BOTTOM PLATES AND POSITION

SEAM IDENTIFICATION KEY

REV.	BY	DATE	DESCRIPTION
1	EJ	03/23/2015	REVISED TITLE BLOCK
0	EJ	02/16/2015	INITIAL ISSUE

BMT ACQUISITION, LLC
ENGINEERS – FABRICATORS – CONSTRUCTORS

8301 BROADWAY BLVD SE
ALBUQUERQUE, NM 87105–7453
PHONE: 505–563–4800
FAX: 505–563–4799
http://www.bmt-tank.com

T–110
&
T–116

ROOF WELD MAP
6,000 GAL. WATER STORAGE TANKS
(10.17'DIA. X 11'HGT.) AWWA–D100–11

CUSTOMER:
FLITEWAY TECH., INC

PROJECT:
EDB INTERIM MEASURE

DRAWN:	JOB No.:
EJ	30883
CHECKED: GAV	
DATE: 02/16/2015	SHEET No.:
REVISION: 1	E07

NORTH

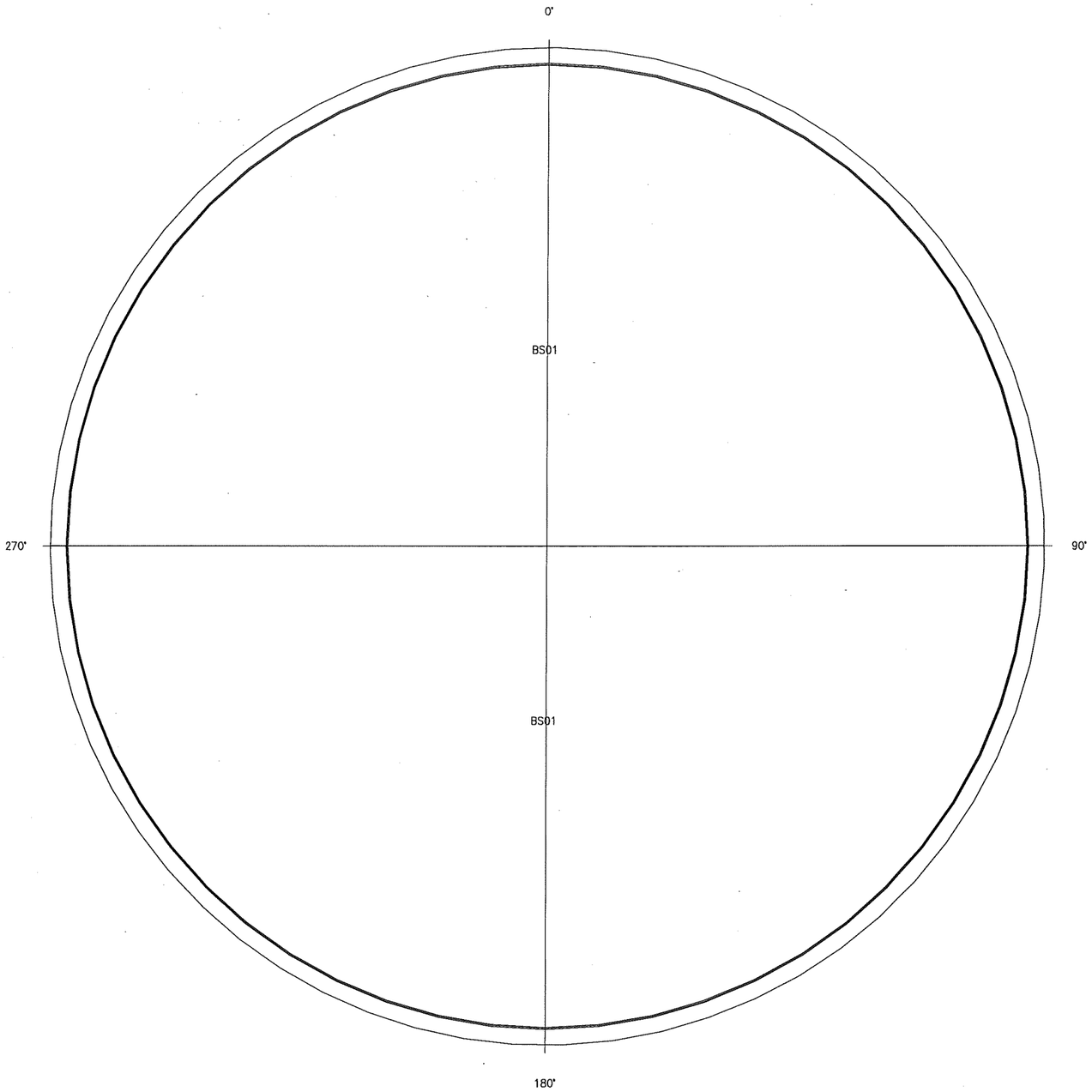

PLAN VIEW

WELDER INFORMATION	
FULL NAME	INITIALS

MARK LOCATIONS	
LEAK	○
REPAIRED	⊠
RETESTED	⊠

DATE:_____

NOTES:_____

CUSTOMER (WITNESS):_____
SIGNATURE

FIELD FOREMAN:_____
SIGNATURE

REV.	BY	DATE	DESCRIPTION
1	EJ	03/23/2015	CHANGED BOTTOM PLATE ORIENTATION REVISED TITLE BLOCK
0	EJ	02/16/2015	INITIAL ISSUE

BMT ACQUISITION, LLC
ENGINEERS – FABRICATORS – CONSTRUCTORS

8301 BROADWAY BLVD SE
ALBUQUERQUE, NM 87105–7453
PHONE: 505–563–4800
FAX: 505–563–4799
http://www.bmt–tank.com

T–110
&
T–116

DIESEL TEST VACUUM
6,000 GAL. WATER STORAGE TANKS
(10.17'DIA. X 11'HGT.) AWWA–D100–11

CUSTOMER:
FLITEWAY TECH., INC

PROJECT:
EDB INTERIM MEASURE

DRAWN: EJ	JOB No.: 30883
CHECKED: GAV	
DATE: 02/16/2015	SHEET No.: E08
REVISION: 1	

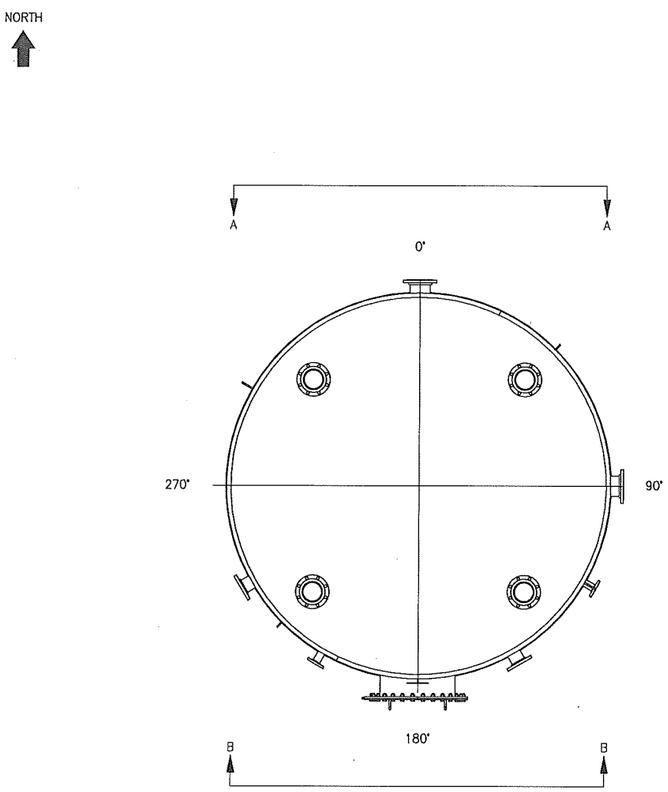

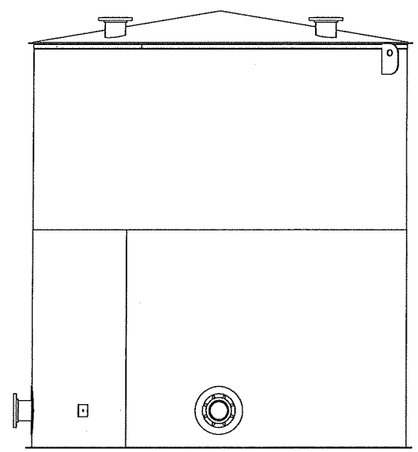

VIEW A–A

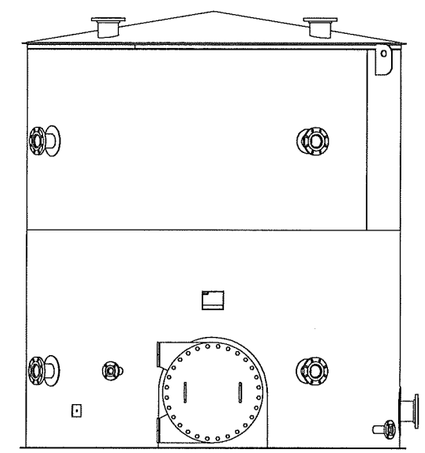

VIEW B–B

REV.	BY	DATE	DESCRIPTION
2	MEM	04/14/2015	REVISE NOZZLE ORIENTATION
1	EJ	03/23/2015	RELOCATED ALL NOZZLES REVISED TITLE BLOCK
0	EJ	02/16/2015	INITIAL ISSUE

BMT ACQUISITION, LLC
ENGINEERS – FABRICATORS – CONSTRUCTORS

8301 BROADWAY BLVD SE
ALBUQUERQUE, NM 87105–7453
PHONE: 505–563–4800
FAX: 505–563–4799
http://www.bmt-tank.com

T–110
&
T–116

WELD MAP
6,000 GAL. WATER STORAGE TANKS
(10.17'DIA. X 11'HGT.) AWWA–D100–11

CUSTOMER:
FLITEWAY TECH., INC

PROJECT:
EDB INTERIM MEASURE

DRAWN: EJ	JOB No.: 30883
CHECKED: GAV	
DATE: 02/16/2015	SHEET No.: E09
REVISION: 2	

NOTE 1: LINEAR FEET OF WELD IS 10'-6 1/2"

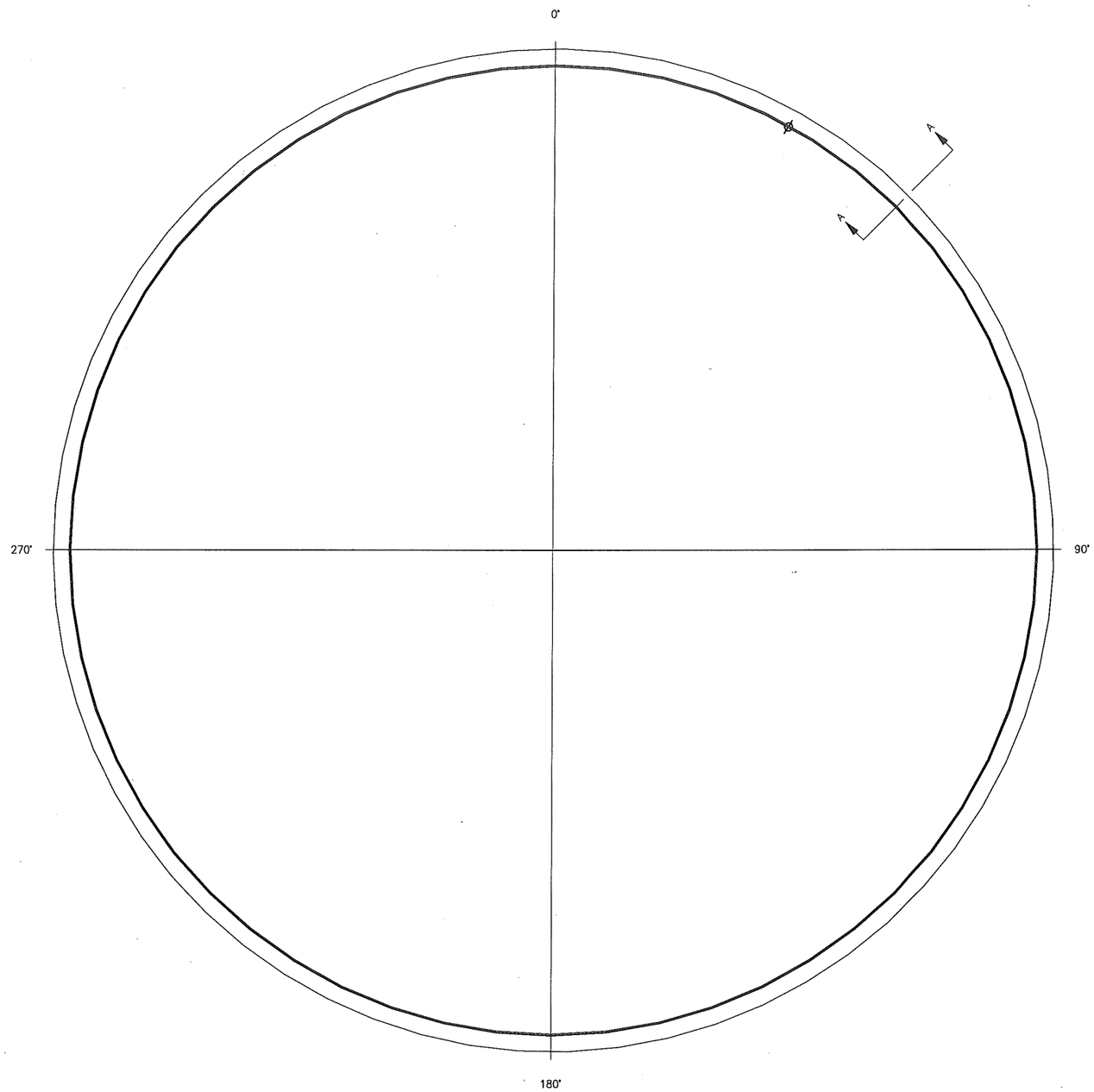

10'-6 1/2" BUTT-WELDED BOTTOM

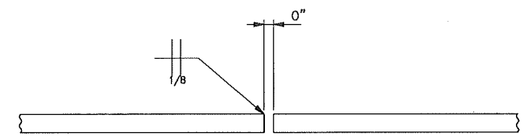

TYPICAL BUTT JOINT

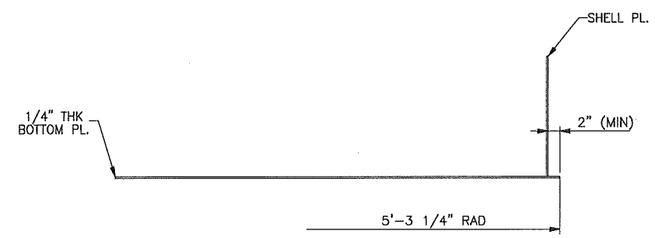

SECTION A-A

REV.	BY	DATE	DESCRIPTION
1	EJ	03/23/2015	CHANGED BOTTOM PLATE ORIENTATION REVISED TITLE BLOCK
0	EJ	02/16/2015	INITIAL ISSUE

BMT ACQUISITION, LLC
ENGINEERS – FABRICATORS – CONSTRUCTORS

8301 BROADWAY BLVD SE
ALBUQUERQUE, NM 87105-7453
PHONE: 505-563-4800
FAX: 505-563-4799
http://www.bmt-tank.com

T-110
&
T-116

BOTTOM LAYOUT
AND DETAILS
6,000 GAL. WATER STORAGE TANKS
(10.17'DIA. X 11'HGT.) AWWA-D100-11

CUSTOMER:
FLITEWAY TECH., INC

PROJECT:
EDB INTERIM MEASURE

DRAWN: EJ	JOB No.: 30883
CHECKED: GAV	
DATE: 02/16/2015	SHEET No.: BL01
REVISION: 1	

WORK INSTRUCTIONS								
RECV	CUT ROLL	FIT	WELDED	READY TO COAT	SENT TO VENDOR	COATING COMPLETE	READY TO SHIP	SHIPPED

BILL OF MATERIALS								
QTY	SHPG MARK	ASSY QTY	ASSY MARK	DESCRIPTION	LENGTH	SPEC MATL	REMARKS	LBS WEIGHT
2	BS01			BOTTOM PL. 1/4" x 63 3/16" x	10'-6 1/2"	A36		[889]

BILL OF MATERIALS LISTED FOR (1) TANK - (2) TANKS REQUIRED.
NOTE 1.- CUTTING RADIUS IS 5'-3 1/4"
NOTE 2.- TOTAL WEIGHT PLATES SHOWN = 889 LBS

RAW MATERIAL					
QTY	MK	PLATES	DESCRIPTION	CUT LENGTH	WEIGHT
1	BRAW-01	BS01, NIL	PL. 1/4" x 96" x 17'-5 7/8"	611 13/16"	[1427]

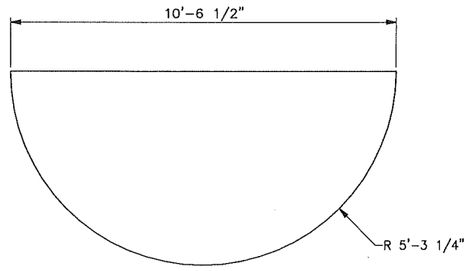

BS01 (2 REQD)

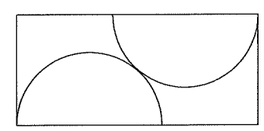

SEE RAW MATERIAL TABLE

REV.	BY	DATE	DESCRIPTION
1	EJ	03/23/2015	REVISED TITLE BLOCK
0	EJ	02/16/2015	INITIAL ISSUE

BMT ACQUISITION, LLC
ENGINEERS - FABRICATORS - CONSTRUCTORS

8301 BROADWAY BLVD SE
ALBUQUERQUE, NM 87105-7453
PHONE: 505-563-4800
FAX: 505-563-4799
http://www.bmt-tank.com

T-110
&
T-116

BOTTOM PLATE
DETAILS
6,000 GAL. WATER STORAGE TANKS
(10.17'DIA. X 11'HGT.) AWWA-D100-11

CUSTOMER: FLITEWAY TECH., INC
PROJECT: EDB INTERIM MEASURE

DRAWN: EJ
CHECKED: GAV
DATE: 02/16/2015
REVISION: 1

JOB No.: 30883
SHEET No.: BL02

NORTH

NOTE 1: LINEAR FEET OF WELD IS 10'-4 13/16"

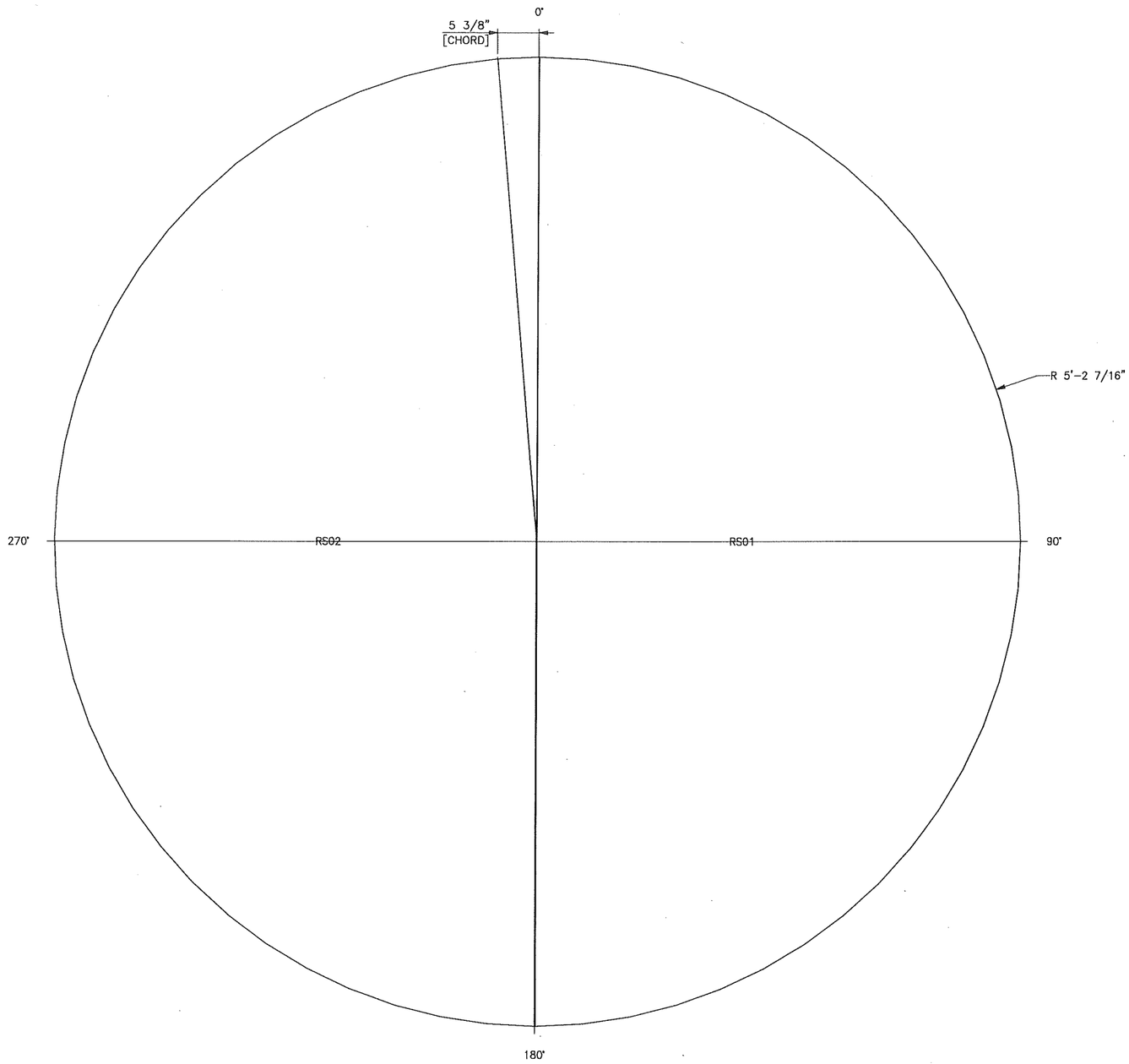

BUTT-WELDED ROOF FOR 10'-2" DIA TANK

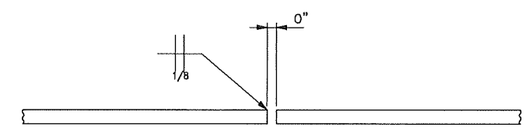

TYPICAL BUTT JOINT

REV.	BY	DATE	DESCRIPTION
1	EJ	03/23/2015	REVISED TITLE BLOCK
0	EJ	02/16/2015	INITIAL ISSUE

BMT ACQUISITION, LLC
ENGINEERS – FABRICATORS – CONSTRUCTORS

8301 BROADWAY BLVD SE
ALBUQUERQUE, NM 87105-7453
PHONE: 505-563-4800
FAX: 505-563-4799
http://www.bmt-tank.com

T-110
&
T-116

ROOF LAYOUT
AND DETAILS
6,000 GAL. WATER STORAGE TANKS
(10.17'DIA. X 11'HGT.) AWWA-D100-11

CUSTOMER: FLITEWAY TECH., INC

PROJECT: EDB INTERIM MEASURE

DRAWN: EJ	JOB No.: 30883
CHECKED: GAV	
DATE: 02/16/2015	SHEET No.: RL01
REVISION: 1	

WORK INSTRUCTIONS								
RECV	CUT ROLL	FIT	WELDED	READY TO COAT	SENT TO VENDOR	COATING COMPLETE	READY TO SHIP	SHIPPED

BILL OF MATERIALS								
QTY	SHPG MARK	ASSY QTY	ASSY MARK	DESCRIPTION	LENGTH	SPEC MATL	REMARKS	LBS WEIGHT
1	RS01			ROOF PL. 3/16" x 62 7/16" x	10'-4 13/16"	A36		[325]
1	RS02			ROOF PL. 3/16" x 62 7/16" x	10'-4 9/16"	A36		[316]

BILL OF MATERIALS LISTED FOR (1) TANK - (2) TANKS REQUIRED.
NOTE 1.- CUTTING RADIUS IS 5'-2 7/16"
NOTE 2.- TOTAL WEIGHT PLATES SHOWN = 641 LBS

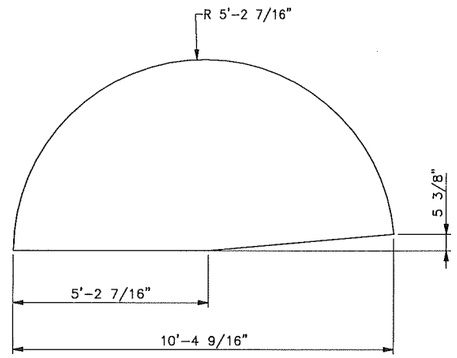

RS02 (1 REQD)

RAW MATERIAL					
QTY	MK	PLATES	DESCRIPTION	CUT LENGTH	WEIGHT
1	RRAW-01	rs01	PL. 3/16" x 96" x 17'-1 5/8"	603 3/16"	[1049]

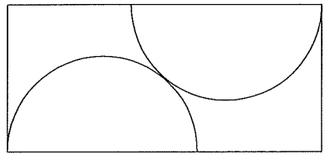

SEE RAW MATERIAL TABLE

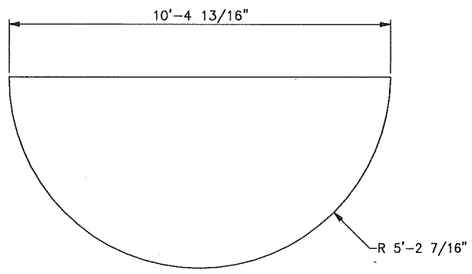

RS01 (1 REQD)

REV.	BY	DATE	DESCRIPTION
1	EJ	03/23/2015	REVISED TITLE BLOCK
0	EJ	02/16/2015	INITIAL ISSUE

BMT ACQUISITION, LLC
ENGINEERS - FABRICATORS - CONSTRUCTORS

8301 BROADWAY BLVD SE
ALBUQUERQUE, NM 87105-7453
PHONE: 505-563-4800
FAX: 505-563-4799
http://www.bmt-tank.com

T-110 & T-116

ROOF PLATE DETAILS
6,000 GAL. WATER STORAGE TANKS
(10.17'DIA. X 11'HGT.) AWWA-D100-11

CUSTOMER: FLITEWAY TECH., INC

PROJECT: EDB INTERIM MEASURE

DRAWN: EJ
CHECKED: GAV
DATE: 02/16/2015
REVISION: 1

JOB No.: 30883

SHEET No.: RL02

WORK INSTRUCTIONS								
RECV	CUT ROLL	FIT	WELDED	READY TO COAT	SENT TO VENDOR	COATING COMPLETE	READY TO SHIP	SHIPPED

BILL OF MATERIALS								
QTY	SHPG MARK	ASSY QTY	ASSY MARK	DESCRIPTION	LENGTH	SPEC MATL	REMARKS	LBS WEIGHT
2	TM01			ANGLE 2" x 2" x 1/4" x	18'-0"	A36	ROLL	[101]

BILL OF MATERIALS LISTED FOR (1) TANK – (2) TANKS REQUIRED.
NOTE 1: ALL ROLLED MEMBERS ARE CUT FROM 20'-0" STOCK LENGTHS.

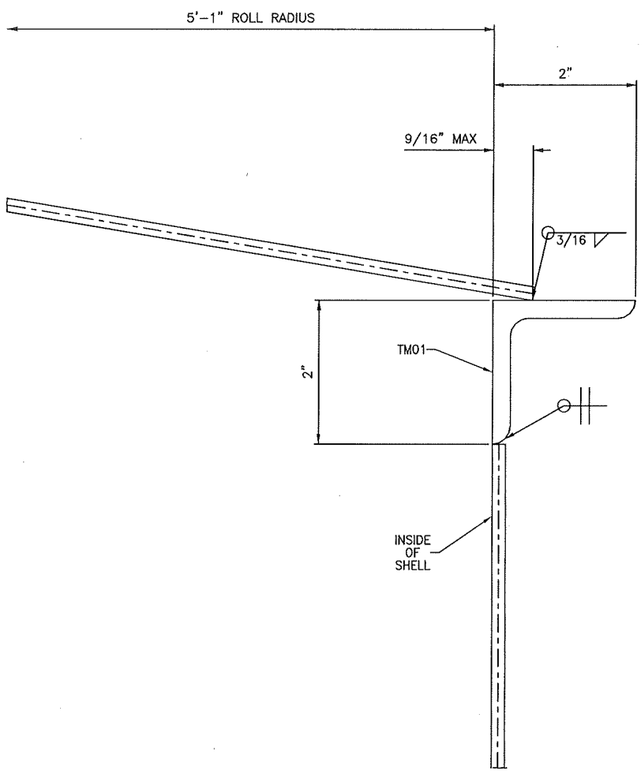

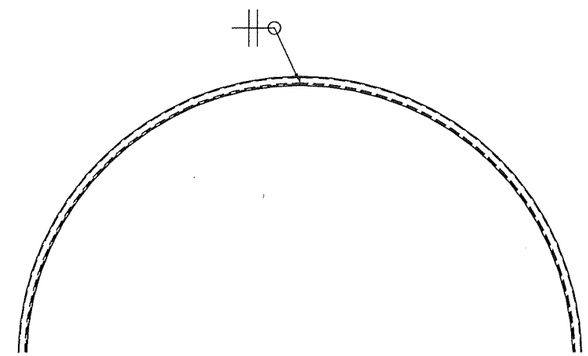

SEGMENT TO SEGMENT WELDING DETAIL

REV.	BY	DATE	DESCRIPTION
1	EJ	03/23/2015	REVISED TITLE BLOCK
0	EJ	02/16/2015	INITIAL ISSUE

BMT ACQUISITION, LLC
ENGINEERS – FABRICATORS – CONSTRUCTORS

8301 BROADWAY BLVD SE
ALBUQUERQUE, NM 87105-7453
PHONE: 505-563-4800
FAX: 505-563-4799
http://www.bmt-tank.com

T-110 & T-116

TOP MEMBER
DETAIL
6,000 GAL. WATER STORAGE TANKS
(10.17'DIA. X 11'HGT.) AWWA-D100-11

CUSTOMER: FLITEWAY TECH., INC
PROJECT: EDB INTERIM MEASURE

DRAWN: EJ
CHECKED: GAV
DATE: 02/16/2015
REVISION: 1

JOB No.: 30883
SHEET No.: TM01

WORK INSTRUCTIONS								
RECV	CUT ROLL	FIT	WELDED	READY TO COAT	SENT TO VENDOR	COATING COMPLETE	READY TO SHIP	SHIPPED

BILL OF MATERIALS								
QTY	SHPG MARK	ASSY QTY	ASSY MARK	DESCRIPTION	LENGTH	SPEC MATL	REMARKS	LBS WEIGHT
1	SR01A			SHELL PL. 0.2500" x 71" x	31'-11 15/16"	A36	ROLL	[1933]
1	SR02A			SHELL PL. 0.1875" x 59" x	31'-11 3/4"	A36	ROLL	[1204]

BILL OF MATERIALS LISTED FOR (1) TANK – (2) TANKS REQUIRED.
NOTE 1: DIMENSIONS SHOWN ARE BEFORE ROLLING.
NOTE 2: ALL DETAIL DIMENSIONS ARE ROUNDED TO THE NEAREST 1/16".
NOTE 3: ROLL ALL SHELL PLATES TO 5'-1" INSIDE RADIUS.
NOTE 4: FABRICATION TOLERANCE FOR BEVEL ANGLE AT PLATE EDGE IS -5°, +5°.
NOTE 5: 1/8" DEDUCTED FROM LENGTH FOR WELD GAP.
NOTE 6: TOTAL WEIGHT PLATES SHOWN = 3137 LBS
NOTE 7: THE LENGTH OF THE PLATES IS CALCULATED USING THE CENTER OF DIAMETER OF THE TANK (ALIGN CENTERS).

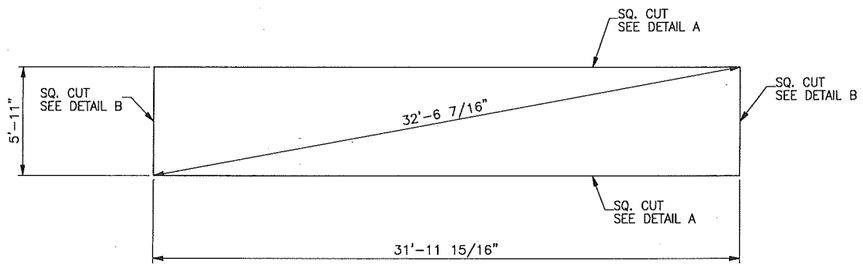

MK. SR01A (1 REQ'D)

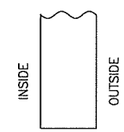

DETAIL A

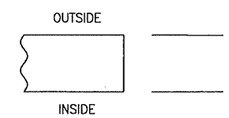

DETAIL B

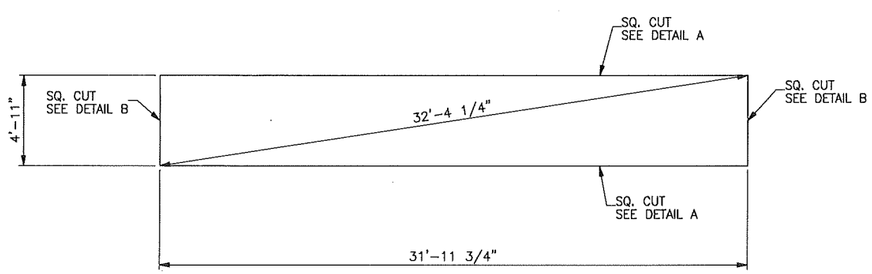

MK. SR02A (1 REQ'D)

REV.	BY	DATE	DESCRIPTION
1	EJ	03/23/2015	REVISED TITLE BLOCK
0	EJ	02/16/2015	INITIAL ISSUE

BMT ACQUISITION, LLC
ENGINEERS – FABRICATORS – CONSTRUCTORS

8301 BROADWAY BLVD SE
ALBUQUERQUE, NM 87105-7453
PHONE: 505-563-4800
FAX: 505-563-4799
http://www.bmt-tank.com

T-110 & T-116

SHELL COURSE PLATES
6,000 GAL. WATER STORAGE TANKS
(10.17'DIA. X 11'HGT.) AWWA-D100-11

CUSTOMER: FLITEWAY TECH., INC

PROJECT: EDB INTERIM MEASURE

DRAWN: EJ
CHECKED: GAV
DATE: 02/16/2015
REVISION: 1

JOB No.: 30883

SHEET No.: PL01

NOTES

1.– AFTER INSTALLATION, AIR TEST REPAD WELDS TO 15 PSI PER API–650–5.3.4.
2.– AFTER THE REINFORCING PAD(S) HAVE BEEN TESTED, THE 1/4" DRILLED AND TAPED HOLE(S) MUST REMAIN OPEN (NO PLUGS, GREASE, PAINT OR ANY OTHER FOREIGN MATERIAL PLUGGING THE 1/4" TEST HOLE).
3.– GASKETED FACES SHALL BE MACHINE FINISHED TO PROVIDE A MINIMUM GASKET BEARING WIDTH OF 3/4".
4.– BOLT HOLES TO STRADDLE TANKS VERTICAL CENTERLINE.

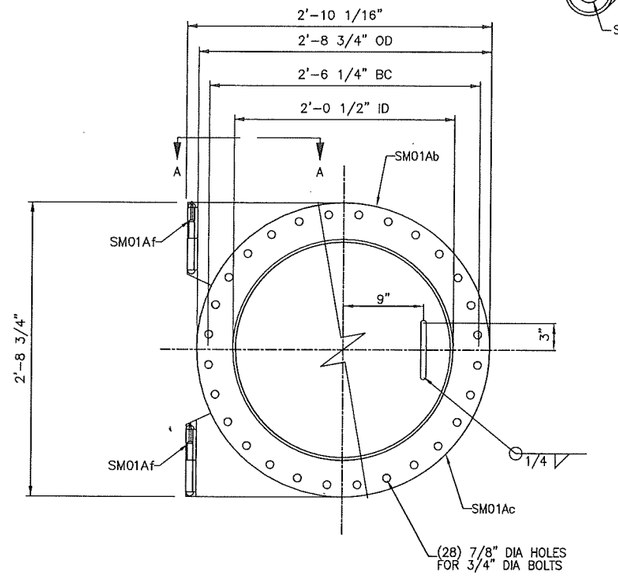

FLANGE/COVER ASSY

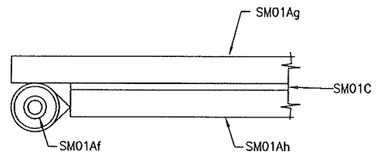

SECTION A–A

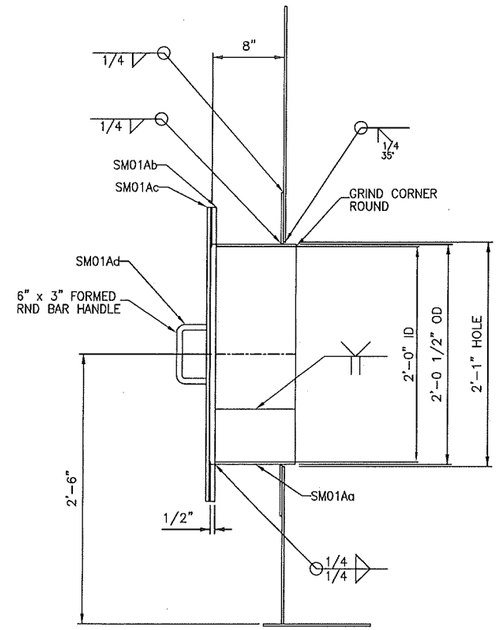

24" SHELL MANWAY, MK. SM01A

DETAIL FOR MANWAY

K

WORK INSTRUCTIONS

RECV	CUT ROLL	FIT	WELDED	READY TO COAT	SENT TO VENDOR	COATING COMPLETE	READY TO SHIP	SHIPPED

BILL OF MATERIALS

QTY	SHPG MARK	ASSY QTY	ASSY MARK	DESCRIPTION	LENGTH	SPEC MATL	REMARKS	LBS WEIGHT
1	SM01A			24" SHELL MANWAY				[224]
		1	SM01Aa	PL. 1/4" x 9" x	6'–4 3/8"	A36	ROLL	46
		1	SM01Ab	FLANGE PL 1/2" x 24 1/2" ID x 32 3/4" OD		A36		52
		1	SM01Ac	COVER PL 3/8" x 32 3/4" OD		A36		90
		2	SM01Ad	RND BAR 5/8" DIA x	1'–0"	A36	BEND	2
		4	SM01Ae	MACHINE BOLT 3/4" DIA W/HN (SHIPPING) x	2"	A325	W/ H. NUTS	2
		2	SM01Af	NARROW–PROFILE WELD–ON LIFT–OFF HINGE		A36	MC#3636A6	4
		2	SM01Ag	PL 1/2" x 9 1/4" x	1'–5 1/2"	A36		16
		2	SM01Ah	PL 3/8" x 9 1/4" x	1'–4 3/8"	A36		12
28	SM01B			MACHINE BOLT 3/4" DIA W/HN (SERVICE) x	2"	A325	W/ H. NUTS	[16]
1	SM01C			GASKET 1/8" THK x 24" ID x 32 3/4" OD		NEOPRENE		[1]
1	SM01D			REPAD PL. 0.2500" x 24 13/16" ID x 36" OD		A36	ROLL	[36]

BILL OF MATERIALS LISTED FOR (1) TANK – (2) TANK REQUIRED.

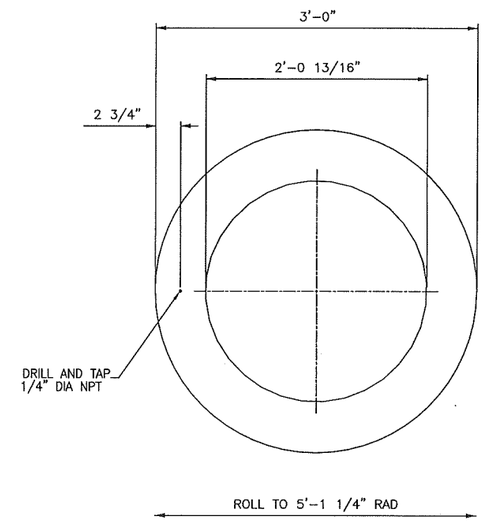

MK. SM01B

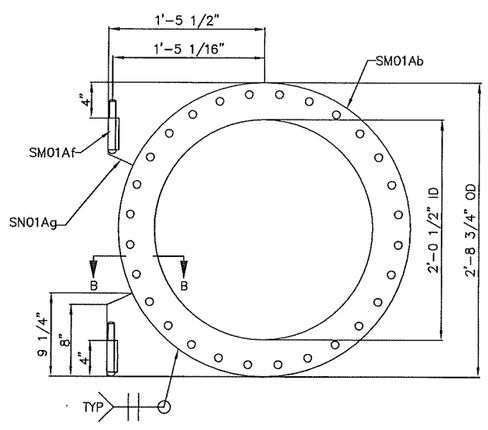

MK. SM01Ab & SM01Ag

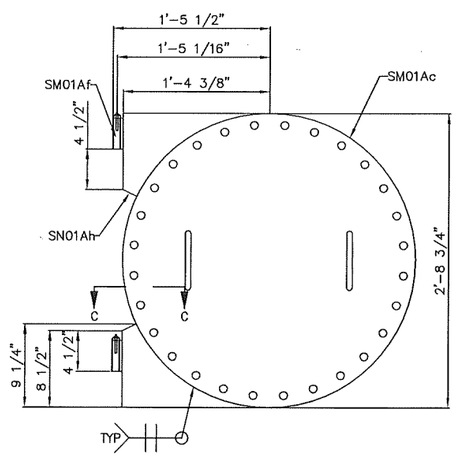

MK. SM01Ac & SM01Ah

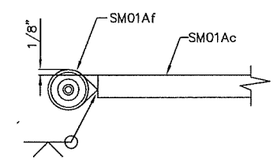

SECTION C–C

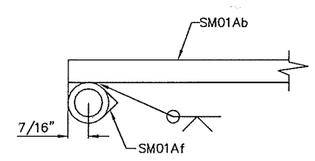

SECTION B–B

REV.	BY	DATE	DESCRIPTION
1	EJ	03/23/2015	REVISED TITLE BLOCK
0	EJ	02/16/2015	INITIAL ISSUE

BMT ACQUISITION, LLC
ENGINEERS – FABRICATORS – CONSTRUCTORS

8301 BROADWAY BLVD SE
ALBUQUERQUE, NM 87105–7453
PHONE: 505–563–4800
FAX: 505–563–4799
http://www.bmt-tank.com

T–110 & T–116

24" SHELL MANWAY W/HINGE
6,000 GAL. WATER STORAGE TANKS
(10.17'DIA. X 11'HGT.) AWWA–D100–11

CUSTOMER: FLITEWAY TECH., INC

PROJECT: EDB INTERIM MEASURE

DRAWN: EJ	JOB No.: 30883
CHECKED: GAV	
DATE: 02/16/2015	SHEET No.: SM01
REVISION: 1	

WORK INSTRUCTIONS								
RECV	CUT ROLL	FIT	WELDED	READY TO COAT	SENT TO VENDOR	COATING COMPLETE	READY TO SHIP	SHIPPED

BILL OF MATERIALS								
QTY	SHPG MARK	ASSY QTY	ASSY MARK	DESCRIPTION	LENGTH	SPEC MATL	REMARKS	LBS WEIGHT
1	SN01A			6" SHELL NOZZLE				[31]
		1	SN01Aa	6" SCH 80 PIPE x	5 3/4"	A53-B		14
		1	SN01Ab	6" - 150# R.F. S.O. FLANGE		A105		17
1	SN01B			REPAD PL. 0.2500" x 6 3/4" ID x 15 3/4" OD		A36	ROLL	[12]

BILL OF MATERIALS LISTED FOR (1) TANK - (2) TANKS REQUIRED.

NOTES:
1.- AFTER INSTALLATION, AIR TEST REPAD WELDS TO 15 PSI PER API-650 PARA 7.3.4.
2.- AFTER THE REINFORCING PAD(S) HAVE BEEN TESTED, THE 0" DRILLED AND TAPPED HOLE(S) MUST REMAIN OPEN (NO PLUGS, GREASE, PAINT OR ANY OTHER FOREIGN MATERIAL PLUGGING THE 0" TEST HOLE).

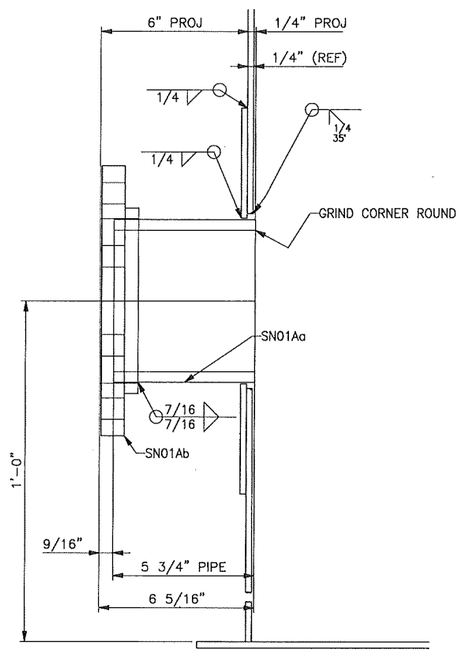

6" NOZZLE, MK. SN01A

6 5/8" NOZZLE OD
7 1/8" HOLE OPENING

DETAIL FOR NOZZLE E

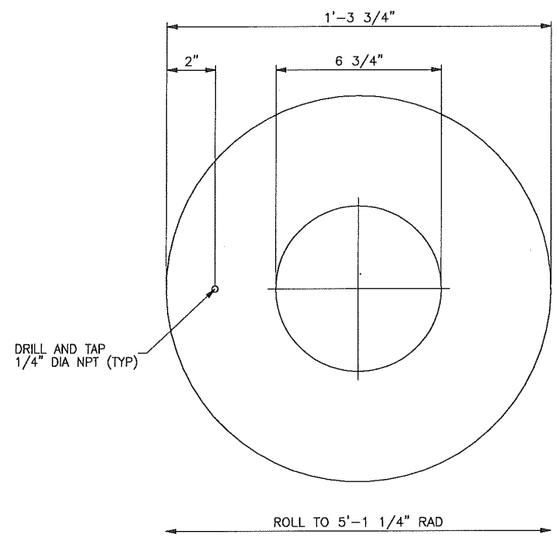

MK. SN01AB

REV.	BY	DATE	DESCRIPTION
2	MEM	04/14/2015	REVISED FLANGE FACE
1	EJ	03/23/2015	REVISED DWG REVISED BOM & TITLE BLOCK
0	EJ	02/16/2015	INITIAL ISSUE

BMT ACQUISITION, LLC
ENGINEERS - FABRICATORS - CONSTRUCTORS

8301 BROADWAY BLVD SE
ALBUQUERQUE, NM 87105-7453
PHONE: 505-563-4800
FAX: 505-563-4799
http://www.bmt-tank.com

T-110
&
T-116

6" DISCHARGE NOZZLE
6,000 GAL. WATER STORAGE TANKS
(10.17'DIA. X 11'HGT.) AWWA-D100-11

CUSTOMER:
FLITEWAY TECH., INC

PROJECT:
EDB INTERIM MEASURE

DRAWN: EJ	JOB No.: 30883
CHECKED: GAV	
DATE: 02/16/2015	SHEET No.: SN01
REVISION: 2	

WORK INSTRUCTIONS								
RECV	CUT ROLL	FIT	WELDED	READY TO COAT	SENT TO VENDOR	COATING COMPLETE	READY TO SHIP	SHIPPED

BILL OF MATERIALS								
QTY	SHPG MARK	ASSY QTY	ASSY MARK	DESCRIPTION	LENGTH	SPEC MATL	REMARKS	LBS WEIGHT
1	SN02A			4" SHELL NOZZLE				[20]
		1	SN02Aa	4" SCH 80 PIPE x	5 3/4"	A53-B		8
		1	SN02Ab	4" - 150# R.F. S.O. FLANGE		A105		12
1	SN02B			REPAD PL. 0.1875" x 4 5/8" ID x 8" OD		A36	ROLL	[2]

BILL OF MATERIALS LISTED FOR (1) TANK - (2) TANKS REQUIRED.

NOTES:

1.- AFTER INSTALLATION, AIR TEST REPAD WELDS TO 15 PSI PER API-650 PARA 7.3.4.

2.- AFTER THE REINFORCING PAD(S) HAVE BEEN TESTED, THE 0" DRILLED AND TAPPED HOLE(S) MUST REMAIN OPEN (NO PLUGS, GREASE, PAINT OR ANY OTHER FOREIGN MATERIAL PLUGGING THE 0" TEST HOLE).

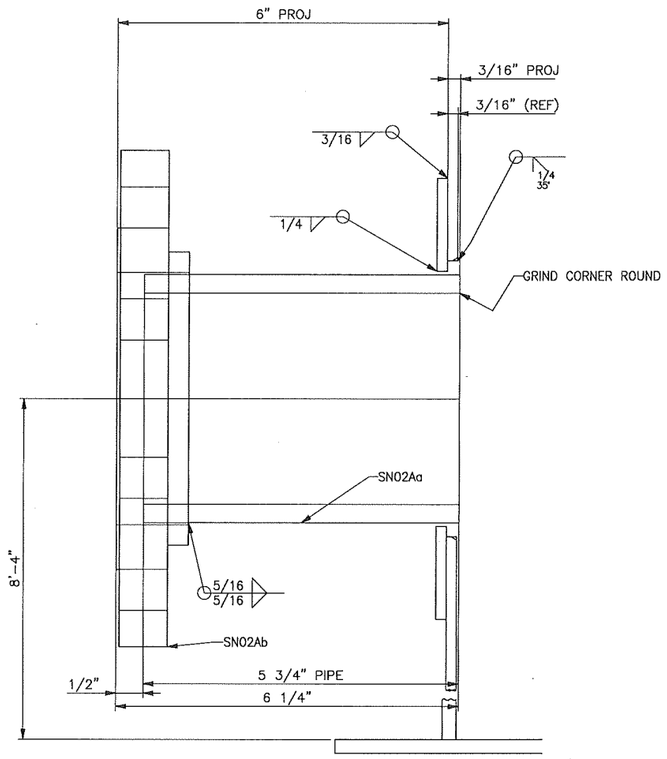

4" NOZZLE, MK. SN02A

4 1/2" NOZZLE OD
5" HOLE OPENING

DETAIL FOR NOZZLE G

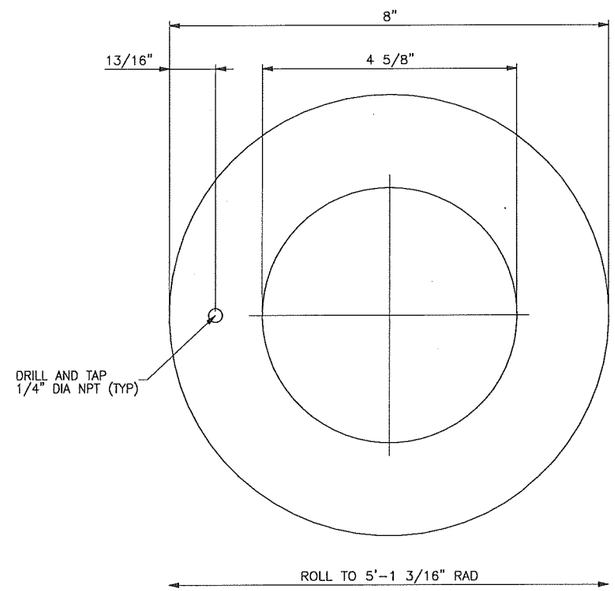

MK. SN02AB

REV.	BY	DATE	DESCRIPTION
2	MEM	04/14/2015	REVISE FLANGE FACE
1	EJ	03/23/2015	REVISE DWG REVISED BOM & TITLE BLOCK
0	EJ	02/16/2015	INITIAL ISSUE

BMT ACQUISITION, LLC
ENGINEERS - FABRICATORS - CONSTRUCTORS

8301 BROADWAY BLVD SE
ALBUQUERQUE, NM 87105-7453
PHONE: 505-563-4800
FAX: 505-563-4799
http://www.bmt-tank.com

T-110
&
T-116

4" LEVEL NOZZLE
6,000 GAL. WATER STORAGE TANKS
(10.17'DIA. X 11'HGT.) AWWA-D100-11

CUSTOMER:
FLITEWAY TECH., INC

PROJECT:
EDB INTERIM MEASURE

DRAWN: EJ	JOB No.: 30883
CHECKED: GAV	
DATE: 02/16/2015	SHEET No.: SN02
REVISION: 2	

WORK INSTRUCTIONS								
RECV	CUT ROLL	FIT	WELDED	READY TO COAT	SENT TO VENDOR	COATING COMPLETE	READY TO SHIP	SHIPPED

BILL OF MATERIALS								
QTY	SHPG MARK	ASSY QTY	ASSY MARK	DESCRIPTION	LENGTH	SPEC MATL	REMARKS	LBS WEIGHT
1	SN03A			2" SHELL NOZZLE				[9]
		1	SN03Aa	2" SCH 160 PIPE x	5 3/4"	A53-B		4
		1	SN03Ab	2" - 150# R.F. S.O. FLANGE		A105		5

BILL OF MATERIALS LISTED FOR (1) TANK - (2) TANKS REQUIRED.

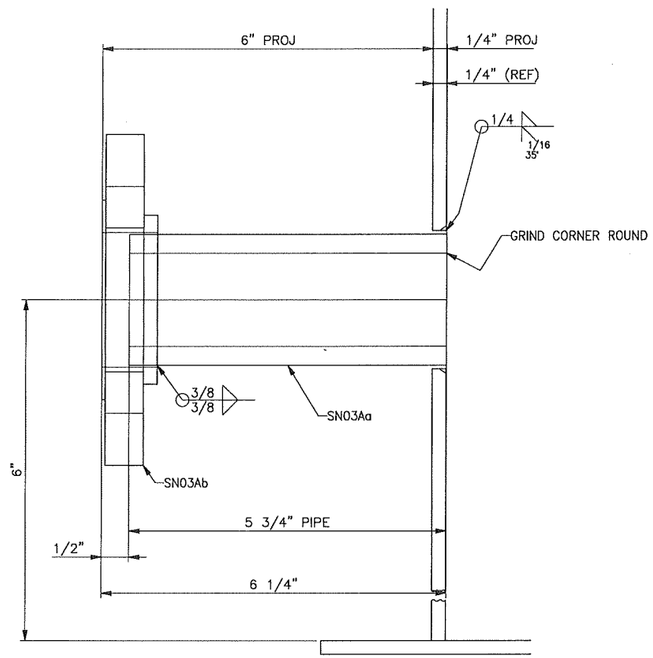

2" NOZZLE, MK. SN03A

2 3/8" NOZZLE OD
2 1/2" HOLE OPENING

DETAIL FOR NOZZLE F

REV.	BY	DATE	DESCRIPTION
2	MEM	04/14/2015	REVISE FLANGE FACE
1	EJ	03/23/2015	REVISE TITLE BLOCK
0	EJ	02/16/2015	INITIAL ISSUE

BMT ACQUISITION, LLC
ENGINEERS - FABRICATORS - CONSTRUCTORS

8301 BROADWAY BLVD SE
ALBUQUERQUE, NM 87105-7453
PHONE: 505-563-4800
FAX: 505-563-4799
http://www.bmt-tank.com

T-110
&
T-116

2" DRAIN NOZZLE
6,000 GAL. WATER STORAGE TANKS
(10.17'DIA. X 11'HGT.) AWWA-D100-11

CUSTOMER:
FLITEWAY TECH., INC

PROJECT:
EDB INTERIM MEASURE

DRAWN: EJ
CHECKED: GAV
DATE: 02/16/2015
REVISION: 2

JOB No.: 30883

SHEET No.: SN03

WORK INSTRUCTIONS								
RECV	CUT ROLL	FIT	WELDED	READY TO COAT	SENT TO VENDOR	COATING COMPLETE	READY TO SHIP	SHIPPED

BILL OF MATERIALS								
QTY	SHPG MARK	ASSY QTY	ASSY MARK	DESCRIPTION	LENGTH	SPEC MATL	REMARKS	LBS WEIGHT
1	SN04A			4" SHELL NOZZLE				[20]
		1	SN04Aa	4" SCH 80 PIPE x	5 13/16"	A53-B		8
		1	SN04Ab	4" – 150# R.F. S.O. FLANGE		A105		12
1	SN04B			REPAD PL. 0.2500" x 4 5/8" ID x 8" OD		A36	ROLL	[3]

BILL OF MATERIALS LISTED FOR (1) TANK – (2) TANKS REQUIRED.

NOTES:
1.– AFTER INSTALLATION, AIR TEST REPAD WELDS TO 15 PSI PER API–650 PARA 7.3.4.
2.– AFTER THE REINFORCING PAD(S) HAVE BEEN TESTED, THE 0" DRILLED AND TAPPED HOLE(S) MUST REMAIN OPEN (NO PLUGS, GREASE, PAINT OR ANY OTHER FOREIGN MATERIAL PLUGGING THE 0" TEST HOLE).

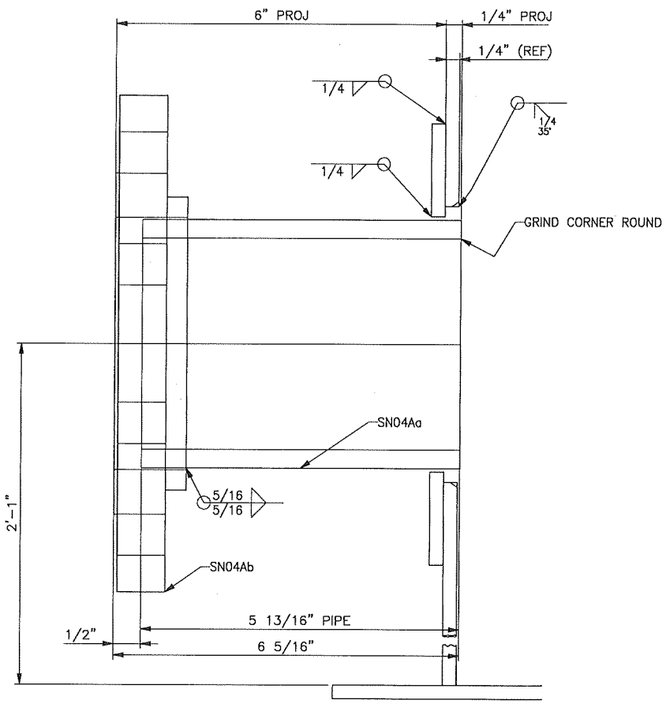

4" NOZZLE, MK. SN04A

4 1/2" NOZZLE OD
5" HOLE OPENING

DETAIL FOR NOZZLE H

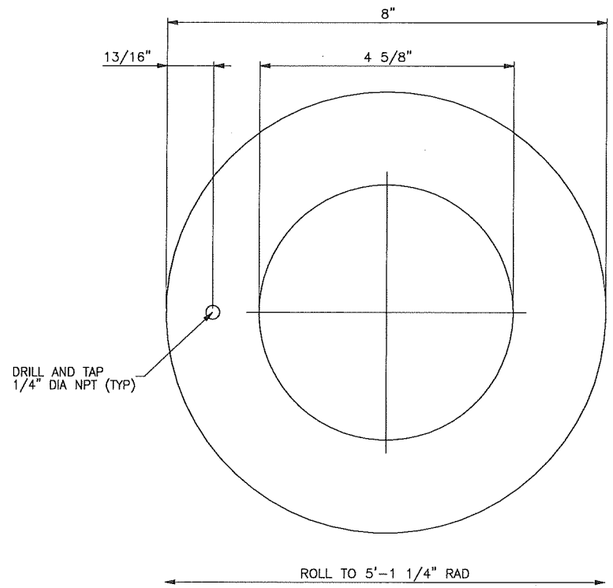

MK. SN04AB

REV.	BY	DATE	DESCRIPTION
2	MEM	04/14/2015	REVISE FLANGE FACE
1	EJ	03/23/2015	REVISE DWG REVISED BOM & TITLE BLOCK
0	EJ	02/16/2015	INITIAL ISSUE

BMT ACQUISITION, LLC
ENGINEERS – FABRICATORS – CONSTRUCTORS

8301 BROADWAY BLVD SE
ALBUQUERQUE, NM 87105–7453
PHONE: 505–563–4800
FAX: 505–563–4799
http://www.bmt-tank.com

T–110
&
T–116

4" LEVEL NOZZLE
6,000 GAL. WATER STORAGE TANKS
(10.17'DIA. X 11'HGT.) AWWA–D100–11

CUSTOMER: FLITEWAY TECH., INC

PROJECT: EDB INTERIM MEASURE

DRAWN: EJ	JOB No.: 30883
CHECKED: GAV	
DATE: 02/16/2015	SHEET No.: SN04
REVISION: 2	

WORK INSTRUCTIONS								
RECV	CUT ROLL	FIT	WELDED	READY TO COAT	SENT TO VENDOR	COATING COMPLETE	READY TO SHIP	SHIPPED

BILL OF MATERIALS								
QTY	SHPG MARK	ASSY QTY	ASSY MARK	DESCRIPTION	LENGTH	SPEC MATL	REMARKS	LBS WEIGHT
1	SN05A			2" SHELL NOZZLE				[9]
		1	SN05Aa	2" SCH 160 PIPE x	5 3/4"	A53-B		4
		1	SN05Ab	2" - 150# R.F. S.O. FLANGE		A105		5

BILL OF MATERIALS LISTED FOR (1) TANK - (2) TANKS REQUIRED.

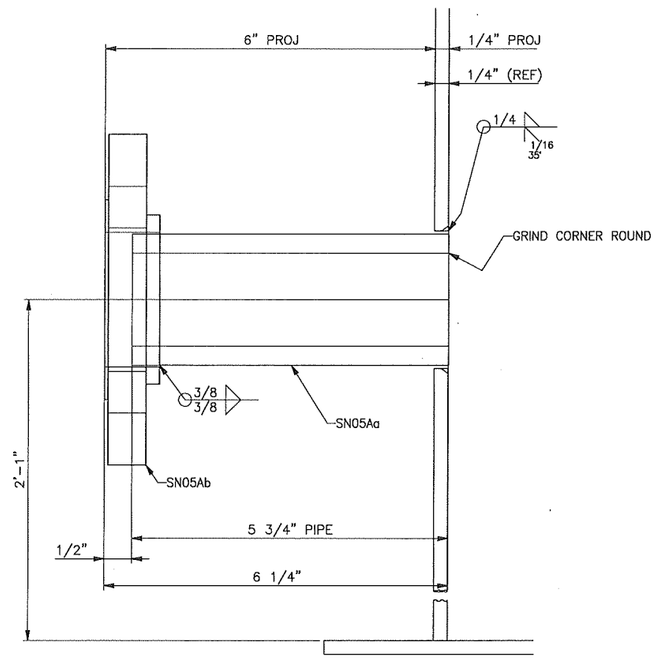

2" NOZZLE, MK. SN05A

2 3/8" NOZZLE OD
2 1/2" HOLE OPENING

DETAIL FOR NOZZLE
J

REV.	BY	DATE	DESCRIPTION
2	MEM	04/14/2015	REVISE FLANGE FACE
1	EJ	03/23/2015	REVISE DWG REVISED BOM & TITLE BLOCK
0	EJ	02/16/2015	INITIAL ISSUE

BMT ACQUISITION, LLC
ENGINEERS - FABRICATORS - CONSTRUCTORS

8301 BROADWAY BLVD SE
ALBUQUERQUE, NM 87105-7453
PHONE: 505-563-4800
FAX: 505-563-4799
http://www.bmt-tank.com

T-110
&
T-116

2" LEVEL NOZZLE
6,000 GAL. WATER STORAGE TANKS
(10.17'DIA. X 11'HGT.) AWWA-D100-11

CUSTOMER:
FLITEWAY TECH., INC

PROJECT:
EDB INTERIM MEASURE

DRAWN: EJ	JOB No.: 30883
CHECKED: GAV	
DATE: 02/16/2015	SHEET No.: SN05
REVISION: 2	

WORK INSTRUCTIONS								
RECV	CUT ROLL	FIT	WELDED	READY TO COAT	SENT TO VENDOR	COATING COMPLETE	READY TO SHIP	SHIPPED

BILL OF MATERIALS								
QTY	SHPG MARK	ASSY QTY	ASSY MARK	DESCRIPTION	LENGTH	SPEC MATL	REMARKS	LBS WEIGHT
1	SN06A			4" SHELL NOZZLE				[20]
		1	SN06Aa	4" SCH 80 PIPE x	5 3/4"	A53-B		8
		1	SN06Ab	4" – 150# R.F. S.O. FLANGE		A105		12
1	SN06B			REPAD PL. 0.1875" x 4 5/8" ID x 10" OD		A36	ROLL	[4]

BILL OF MATERIALS LISTED FOR (1) TANK – (2) TANKS REQUIRED.

NOTES:
1.– AFTER INSTALLATION, AIR TEST REPAD WELDS TO 15 PSI PER API–650 PARA 7.3.4.
2.– AFTER THE REINFORCING PAD(S) HAVE BEEN TESTED, THE 0" DRILLED AND TAPPED HOLE(S) MUST REMAIN OPEN (NO PLUGS, GREASE, PAINT OR ANY OTHER FOREIGN MATERIAL PLUGGING THE 0" TEST HOLE).

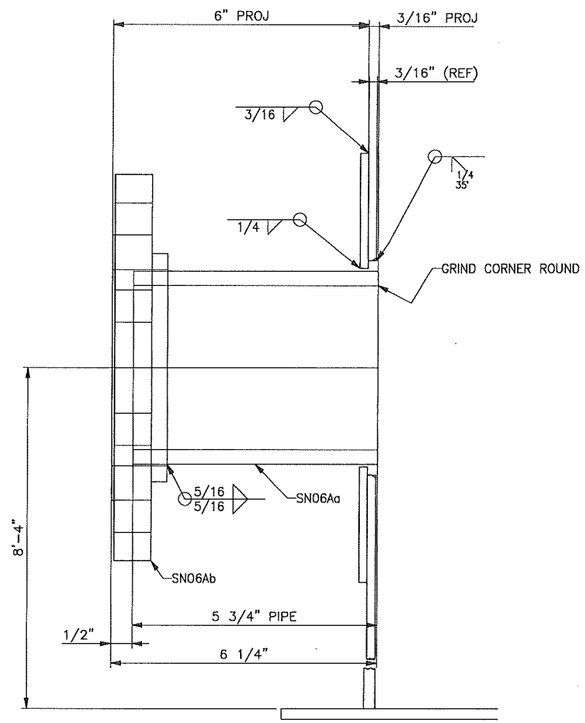

4" NOZZLE, MK. SN06A

4 1/2" NOZZLE OD
5" HOLE OPENING

DETAIL FOR NOZZLE K

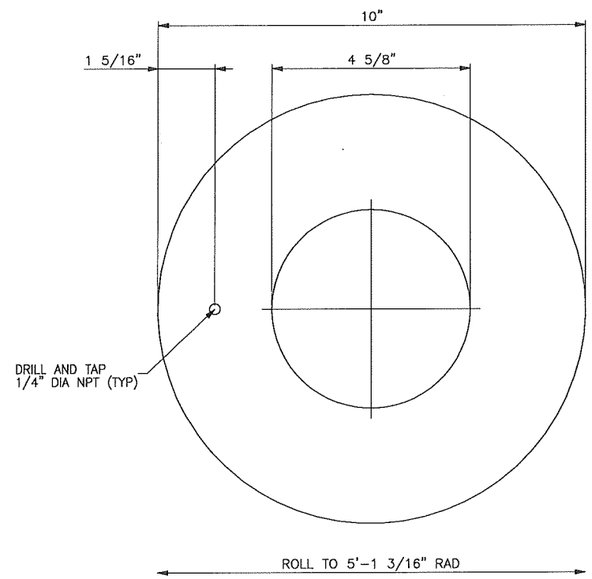

MK. SN06AB

REV.	BY	DATE	DESCRIPTION
2	MEM	04/14/2015	REVISE FLANGE FACE
1	EJ	03/23/2015	REVISE DWG REVISED BOM & TITLE BLOCK
0	EJ	02/16/2015	INITIAL ISSUE

BMT ACQUISITION, LLC
ENGINEERS – FABRICATORS – CONSTRUCTORS

8301 BROADWAY BLVD SE
ALBUQUERQUE, NM 87105–7453
PHONE: 505–563–4800
FAX: 505–563–4799
http://www.bmt-tank.com

T–110 & T–116

4" SPARE NOZZLE
6,000 GAL. WATER STORAGE TANKS
(10.17'DIA. X 11'HGT.) AWWA–D100–11

CUSTOMER: FLITEWAY TECH., INC

PROJECT: EDB INTERIM MEASURE

DRAWN: EJ
CHECKED: GAV
DATE: 02/16/2015
REVISION: 2

JOB No.: 30883

SHEET No.: SN06

WORK INSTRUCTIONS								
RECV	CUT ROLL	FIT	WELDED	READY TO COAT	SENT TO VENDOR	COATING COMPLETE	READY TO SHIP	SHIPPED

BILL OF MATERIALS								
QTY	SHPG MARK	ASSY QTY	ASSY MARK	DESCRIPTION	LENGTH	SPEC MATL	REMARKS	LBS WEIGHT
1	SN07A			4" SHELL NOZZLE				[20]
		1	SN07Aa	4" SCH 80 PIPE x	5 13/16"	A53-B		8
		1	SN07Ab	4" – 150# R.F. S.O. FLANGE		A105		12
1	SN07B			REPAD PL. 0.2500" x 4 5/8" ID x 10" OD		A36	ROLL	[5]

BILL OF MATERIALS LISTED FOR (1) TANK – (2) TANKS REQUIRED.

NOTES:
1.– AFTER INSTALLATION, AIR TEST REPAD WELDS TO 15 PSI PER API–650 PARA 7.3.4.
2.– AFTER THE REINFORCING PAD(S) HAVE BEEN TESTED; THE 0" DRILLED AND TAPPED HOLE(S) MUST REMAIN OPEN (NO PLUGS, GREASE, PAINT OR ANY OTHER FOREIGN MATERIAL PLUGGING THE 0" TEST HOLE).

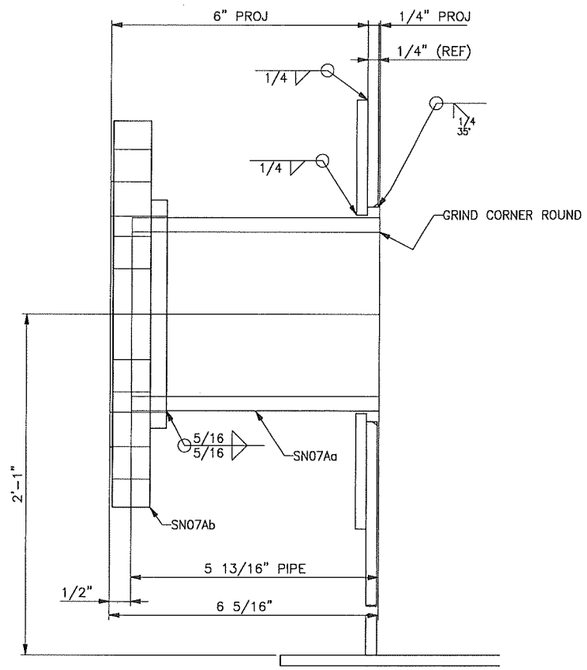

4" NOZZLE, MK. SN07A

4 1/2" NOZZLE OD
5" HOLE OPENING

DETAIL FOR NOZZLE L

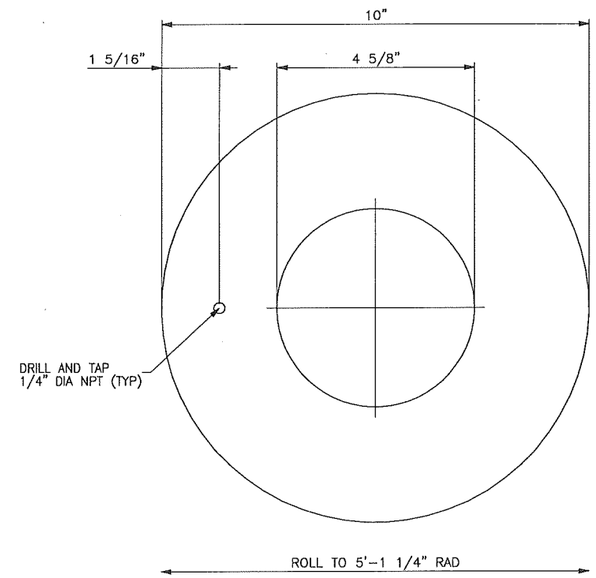

MK. SN07AB

REV.	BY	DATE	DESCRIPTION
2	MEM	04/14/2015	REVISE FLANGE FACE
1	EJ	03/23/2015	RESISE DWG REVISED BOM & TITLE BLOCK
0	EJ	02/16/2015	INITIAL ISSUE

BMT ACQUISITION, LLC
ENGINEERS – FABRICATORS – CONSTRUCTORS

8301 BROADWAY BLVD SE
ALBUQUERQUE, NM 87105–7453
PHONE: 505–563–4800
FAX: 505–563–4799
http://www.bmt-tank.com

T–110 & T–116

4" SPARE NOZZLE
6,000 GAL. WATER STORAGE TANKS
(10.17'DIA. X 11'HGT.) AWWA–D100–11

CUSTOMER: FLITEWAY TECH., INC

PROJECT: EDB INTERIM MEASURE

DRAWN: EJ
CHECKED: GAV
DATE: 02/16/2015
REVISION: 2

JOB No.: 30883

SHEET No.: SN07

WORK INSTRUCTIONS								
RECV	CUT ROLL	FIT	WELDED	READY TO COAT	SENT TO VENDOR	COATING COMPLETE	READY TO SHIP	SHIPPED

BILL OF MATERIALS								
QTY	SHPG MARK	ASSY QTY	ASSY MARK	DESCRIPTION	LENGTH	SPEC MATL	REMARKS	LBS WEIGHT
1	SN08A			6" SHELL NOZZLE				[31]
		1	SN08Aa	6" SCH 80 PIPE x	5 3/4"	A53-B		14
		1	SN08Ab	6" – 150# R.F. S.O. FLANGE		A105		17
1	SN08B			REPAD PL. 0.2500" x 6 3/4" ID x 15 3/4" OD		A36	ROLL	[12]

BILL OF MATERIALS LISTED FOR (1) TANK – (2) TANKS REQUIRED.

NOTES:
1.– AFTER INSTALLATION, AIR TEST REPAD WELDS TO 15 PSI PER API-650 PARA 7.3.4.
2.– AFTER THE REINFORCING PAD(S) HAVE BEEN TESTED, THE 0" DRILLED AND TAPPED HOLE(S) MUST REMAIN OPEN (NO PLUGS, GREASE, PAINT OR ANY OTHER FOREIGN MATERIAL PLUGGING THE 0" TEST HOLE).

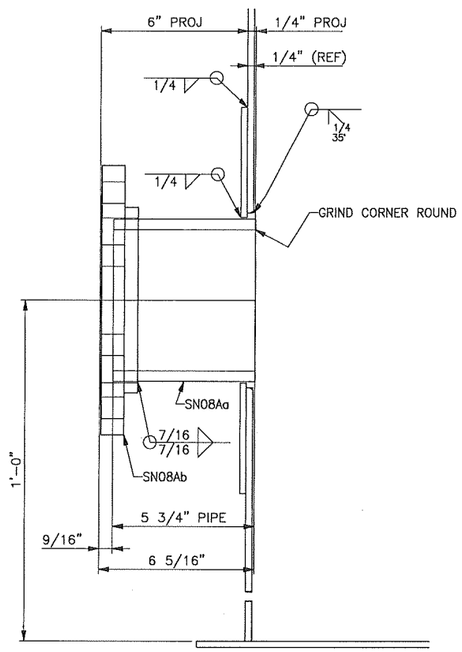

6" NOZZLE, MK. SN08A

6 5/8" NOZZLE OD
7 1/8" HOLE OPENING

DETAIL FOR NOZZLE M

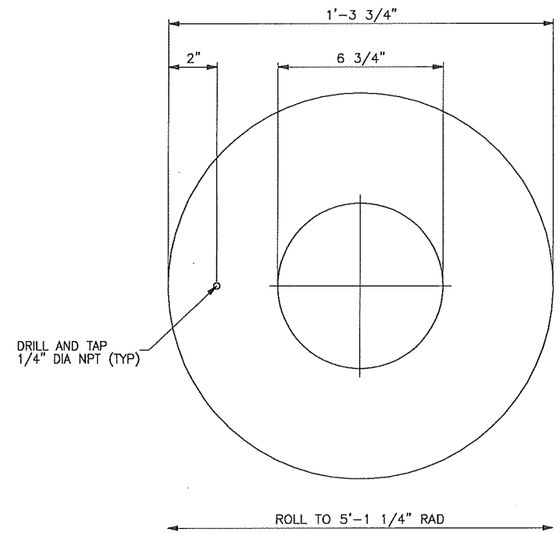

MK. SN08AB

REV.	BY	DATE	DESCRIPTION
2	MEM	04/14/2015	REVISE FLANGE FACE
1	EJ	03/23/2015	REVISE DWG REVISED BOM & TITLE BLOCK
0	EJ	02/16/2015	INITIAL ISSUE

BMT ACQUISITION, LLC
ENGINEERS – FABRICATORS – CONSTRUCTORS

8301 BROADWAY BLVD SE
ALBUQUERQUE, NM 87105-7453
PHONE: 505-563-4800
FAX: 505-563-4799
http://www.bmt-tank.com

T-110
&
T-116

6" SPARE NOZZLE
6,000 GAL. WATER STORAGE TANKS
(10.17'DIA. X 11'HGT.) AWWA-D100-11

CUSTOMER:
FLITEWAY TECH., INC

PROJECT:
EDB INTERIM MEASURE

DRAWN:	JOB No.:
EJ	30883
CHECKED: GAV	
DATE: 02/16/2015	SHEET No.: SN08
REVISION: 2	

WORK INSTRUCTIONS								
RECV	CUT ROLL	FIT	WELDED	READY TO COAT	SENT TO VENDOR	COATING COMPLETE	READY TO SHIP	SHIPPED

BILL OF MATERIALS								
QTY	SHPG MARK	ASSY QTY	ASSY MARK	DESCRIPTION	LENGTH	SPEC MATL	REMARKS	LBS WEIGHT
1	RN01A			6" ROOF NOZZLE				[27]
		1	RN01Aa	6" SCH 40 PIPE x	6 5/16"	A53-B		10
		1	RN01Ab	6" - 150# R.F. S.O. FLANGE		A105		17

BILL OF MATERIALS LISTED FOR (1) TANK - (2) TANKS REQUIRED.

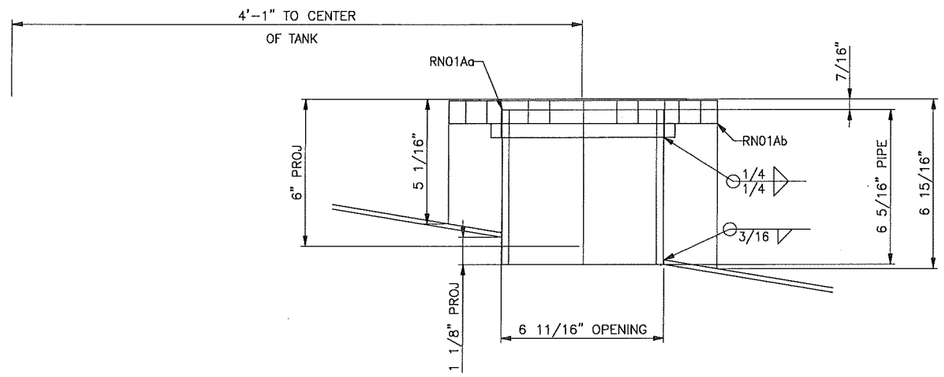

6" NOZZLE, MK. RN01A
DETAIL FOR NOZZLE
A

REV.	BY	DATE	DESCRIPTION
2	MEM	04/14/2015	REVISE FLANGE FACE
1	EJ	03/23/2015	REVISED DWG. REVISED B.O.M. & TITLE BLOCK
0	EJ	02/16/2015	INITIAL ISSUE

BMT ACQUISITION, LLC
ENGINEERS - FABRICATORS - CONSTRUCTORS

8301 BROADWAY BLVD SE
ALBUQUERQUE, NM 87105-7453
PHONE: 505-563-4800
FAX: 505-563-4799
http://www.bmt-tank.com

T-110
&
T-116

6" FILL NOZZLE
6,000 GAL. WATER STORAGE TANKS
(10.17'DIA. X 11'HGT.) AWWA-D100-11

CUSTOMER:
FLITEWAY TECH., INC

PROJECT:
EDB INTERIM MEASURE

DRAWN: EJ	JOB No.: 30883
CHECKED: GAV	
DATE: 02/16/2015	SHEET No.: RN01
REVISION: 2	

WORK INSTRUCTIONS								
RECV	CUT ROLL	FIT	WELDED	READY TO COAT	SENT TO VENDOR	COATING COMPLETE	READY TO SHIP	SHIPPED

BILL OF MATERIALS								
QTY	SHPG MARK	ASSY QTY	ASSY MARK	DESCRIPTION	LENGTH	SPEC MATL	REMARKS	LBS WEIGHT
1	RN02A			6" ROOF NOZZLE				[27]
		1	RN02Aa	6" SCH 40 PIPE x	6 5/16"	A53-B		10
		1	RN02Ab	6" - 150# R.F. S.O. FLANGE		A105		17

BILL OF MATERIALS LISTED FOR (1) TANK - (2) TANKS REQUIRED.

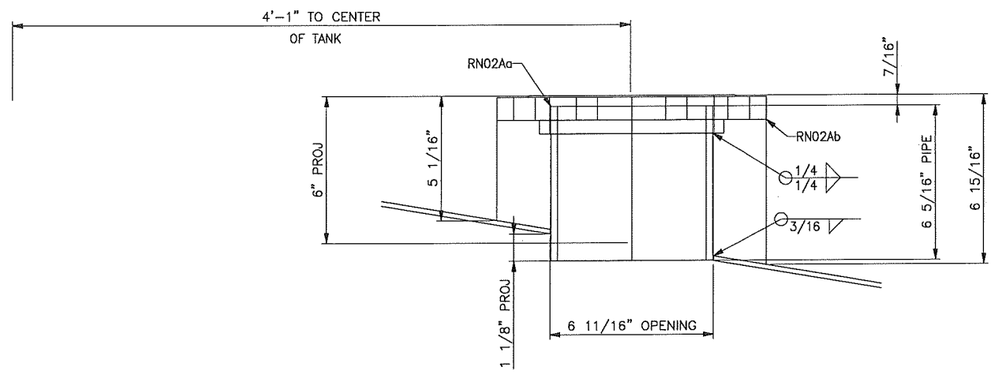

6" NOZZLE, MK. RN02A
DETAIL FOR NOZZLE
B

REV.	BY	DATE	DESCRIPTION
2	MEM	04/14/2015	REVISE FLANGE FACE
1	EJ	03/23/2015	REVISED DWG. REVISED B.O.M. & TITLE BLOCK
0	EJ	02/16/2015	INITIAL ISSUE

BMT ACQUISITION, LLC
ENGINEERS - FABRICATORS - CONSTRUCTORS

8301 BROADWAY BLVD SE
ALBUQUERQUE, NM 87105-7453
PHONE: 505-563-4800
FAX: 505-563-4799
http://www.bmt-tank.com

T-110
&
T-116

6" FILL NOZZLE
6,000 GAL. WATER STORAGE TANKS
(10.17'DIA. X 11'HGT.) AWWA-D100-11

CUSTOMER:
FLITEWAY TECH., INC

PROJECT:
EDB INTERIM MEASURE

DRAWN: EJ	JOB No.: 30883
CHECKED: GAV	
DATE: 02/16/2015	SHEET No.: RN02
REVISION: 2	

WORK INSTRUCTIONS								
RECV	CUT ROLL	FIT	WELDED	READY TO COAT	SENT TO VENDOR	COATING COMPLETE	READY TO SHIP	SHIPPED

BILL OF MATERIALS								
QTY	SHPG MARK	ASSY QTY	ASSY MARK	DESCRIPTION	LENGTH	SPEC MATL	REMARKS	LBS WEIGHT
1	RN03A			6" ROOF NOZZLE				[27]
		1	RN03Aa	6" SCH 40 PIPE x	6 5/16"	A53-B		10
		1	RN03Ab	6" - 150# R.F. S.O. FLANGE		A105		17

BILL OF MATERIALS LISTED FOR (1) TANK - (2) TANKS REQUIRED.

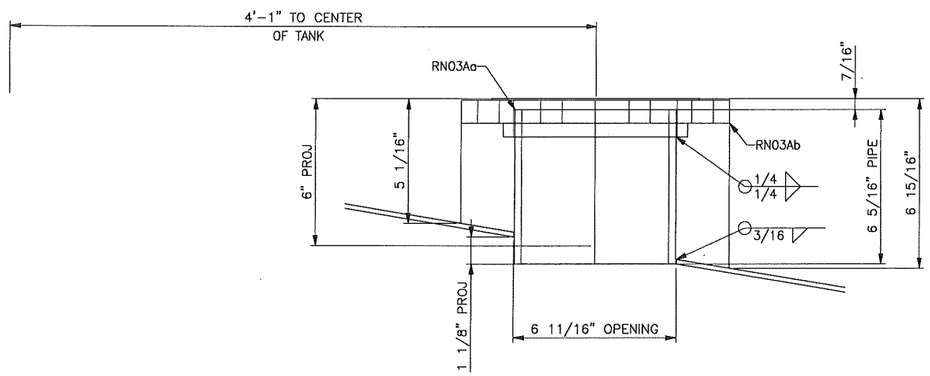

6" NOZZLE, MK. RN03A
DETAIL FOR NOZZLE C

REV.	BY	DATE	DESCRIPTION
2	MEM	04/14/2015	REVISE FLANGE FACE
1	EJ	03/23/2015	REVISED DWG. REVISED B.O.M. & TITLE BLOCK
0	EJ	02/16/2015	INITIAL ISSUE

BMT ACQUISITION, LLC
ENGINEERS - FABRICATORS - CONSTRUCTORS

8301 BROADWAY BLVD SE
ALBUQUERQUE, NM 87105-7453
PHONE: 505-563-4800
FAX: 505-563-4799
http://www.bmt-tank.com

T-110 & T-116

6" VENT NOZZLE
6,000 GAL. WATER STORAGE TANKS
(10.17'DIA. X 11'HGT.) AWWA-D100-11

CUSTOMER: FLITEWAY TECH., INC

PROJECT: EDB INTERIM MEASURE

DRAWN: EJ
CHECKED: GAV
DATE: 02/16/2015
REVISION: 2

JOB No.: 30883

SHEET No.: RN03

WORK INSTRUCTIONS								
RECV	CUT ROLL	FIT	WELDED	READY TO COAT	SENT TO VENDOR	COATING COMPLETE	READY TO SHIP	SHIPPED

BILL OF MATERIALS								
QTY	SHPG MARK	ASSY QTY	ASSY MARK	DESCRIPTION	LENGTH	SPEC MATL	REMARKS	LBS WEIGHT
1	RN04A			6" ROOF NOZZLE				[27]
		1	RN04Aa	6" SCH 40 PIPE x	6 5/16"	A53-B		10
		1	RN04Ab	6" ~ 150# R.F. S.O. FLANGE		A105		17

BILL OF MATERIALS LISTED FOR (1) TANK – (2) TANKS REQUIRED.

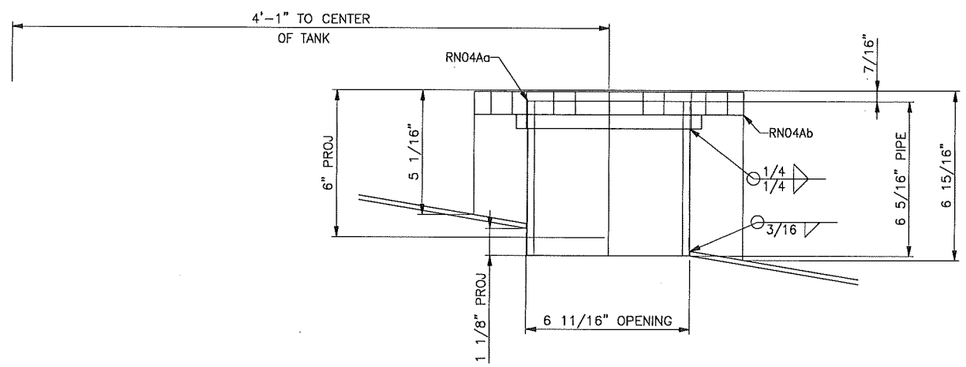

6" NOZZLE, MK. RN04A
DETAIL FOR NOZZLE
D

REV.	BY	DATE	DESCRIPTION
2	MEM	04/14/2015	REVISE FLANGE FACE
1	EJ	03/23/2015	REVISED DWG. REVISED B.O.M. & TITLE BLOCK
0	EJ	02/16/2015	INITIAL ISSUE

BMT ACQUISITION, LLC
ENGINEERS – FABRICATORS – CONSTRUCTORS

8301 BROADWAY BLVD SE
ALBUQUERQUE, NM 87105-7453
PHONE: 505-563-4800
FAX: 505-563-4799
http://www.bmt-tank.com

T-110
&
T-116

6" SPARE NOZZLE
6,000 GAL. WATER STORAGE TANKS
(10.17'DIA. X 11'HGT.) AWWA-D100-11

CUSTOMER:
FLITEWAY TECH., INC

PROJECT:
EDB INTERIM MEASURE

DRAWN: EJ	JOB No.: 30883
CHECKED: GAV	
DATE: 02/16/2015	SHEET No.: RN04
REVISION: 2	

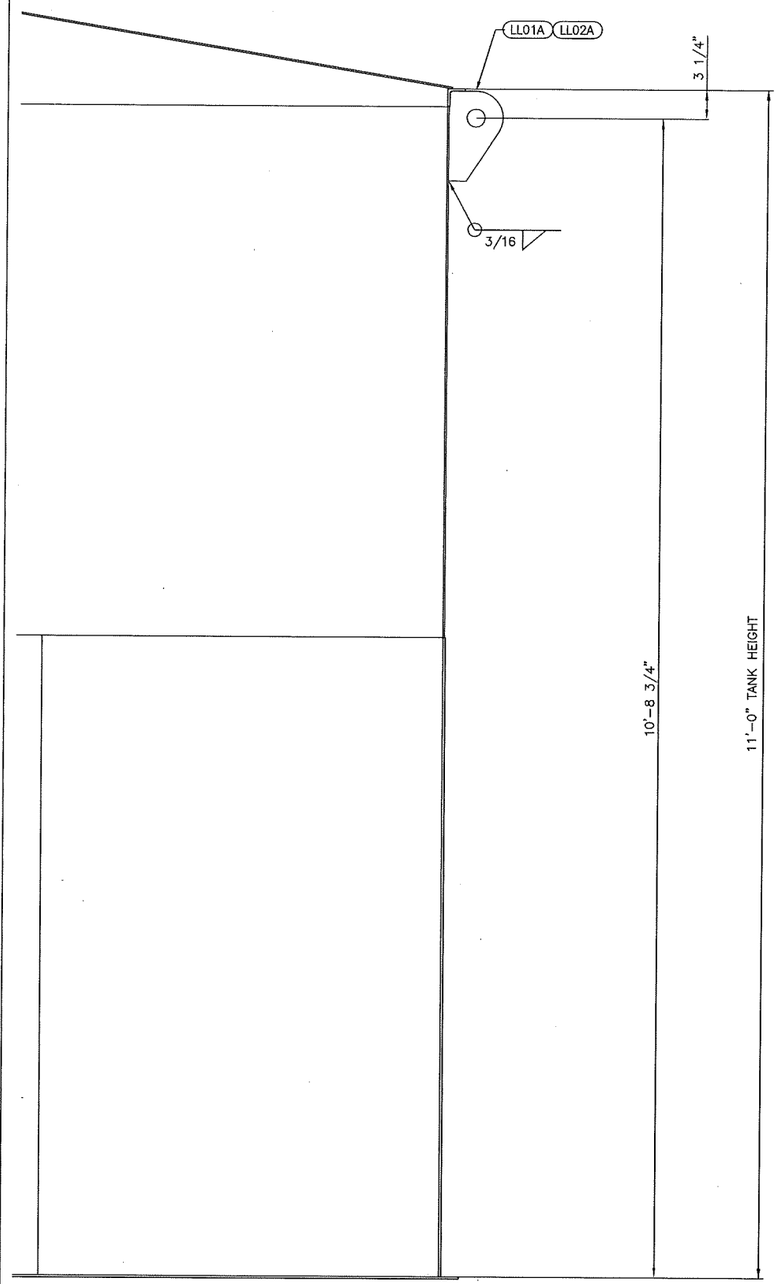

ELEVATION
TYP ELEV FOR ALL LIFTING LUGS

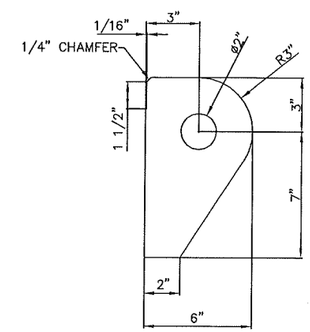

LL01A & LL02A

WORK INSTRUCTIONS								
RECV	CUT ROLL	FIT	WELDED	READY TO COAT	SENT TO VENDOR	COATING COMPLETE	READY TO SHIP	SHIPPED

BILL OF MATERIALS

QTY	SHPG MARK	ASSY QTY	ASSY MARK	DESCRIPTION	LENGTH	SPEC MATL	REMARKS	LBS WEIGHT
1	LL01A			LIFTING LUG				[6]
		1	LL01Aa	FB 1/2" x 6" x	10"	A36		6
1	LL02A			LIFTING LUG				[6]
		1	LL02Aa	FB 1/2" x 6" x	10"	A36		6

BILL OF MATERIALS LISTED FOR (1) TANK – (2) TANK REQUIRED.

NOTE:

1.– LIFTING LUG CAPACITY = 17,000 LBS/EACH

REV.	BY	DATE	DESCRIPTION
1	EJ	03/23/2015	REVISED TITLE BLOCK
0	EJ	02/16/2015	INITIAL ISSUE

BMT ACQUISITION, LLC
ENGINEERS – FABRICATORS – CONSTRUCTORS

8301 BROADWAY BLVD SE
ALBUQUERQUE, NM 87105–7453
PHONE: 505–563–4800
FAX: 505–563–4799
http://www.bmt-tank.com

T–110
&
T–116

LIFTING LUGS
6,000 GAL. WATER STORAGE TANK
(10.17'DIA. X 11'HGT.) AWWA–D100–11

CUSTOMER:
FLITEWAY TECH., INC

PROJECT:
EDB INTERIM MEASURE

DRAWN: EJ	JOB No.: 30883
CHECKED: GAV	
DATE: 02/16/2015	SHEET No.: LL01
REVISION: 1	

AWWA-D-100
BMT ACQUISITION, LLC
ALBUQUERQUE, NM

APPENDIX	AWWA D-100	YEAR COMPLETED	2015
EDITION	11TH EDITION	NOMINAL HEIGHT	11FT
NOMINAL DIAMETER	10.17FT	DESIGN LIQUID LEVEL	10.08FT
MAXIMUM CAPACITY	6123.0 GALS	DESIGN METAL TEMP.	25°F
DES. SPEC. GRAVITY	1.0	MAX. OPERATING TEMP.	100°F
MANUFACTURER'S #	30883	PURCHASERS TANK #	T-110

FABRICATED BY BMT ACQUISITION, LLC

COURSES	THK.	MATERIAL
SHELL RING 1	1/4"	A36
SHELL RING 2	3/16"	A36
ROOF	3/16"	A36
BOTTOM	1/4"	A36

T-110 TANK ONLY

AWWA-D-100
BMT ACQUISITION, LLC
ALBUQUERQUE, NM

APPENDIX	AWWA D-100	YEAR COMPLETED	2015
EDITION	11TH EDITION	NOMINAL HEIGHT	11FT
NOMINAL DIAMETER	10.17FT	DESIGN LIQUID LEVEL	10.08FT
MAXIMUM CAPACITY	6123.0 GALS	DESIGN METAL TEMP.	25°F
DES. SPEC. GRAVITY	1.0	MAX. OPERATING TEMP.	100°F
MANUFACTURER'S #	30883	PURCHASERS TANK #	T-116

FABRICATED BY BMT ACQUISITION, LLC

COURSES	THK.	MATERIAL
SHELL RING 1	1/4"	A36
SHELL RING 2	3/16"	A36
ROOF	3/16"	A36
BOTTOM	1/4"	A36

T-116 TANK ONLY

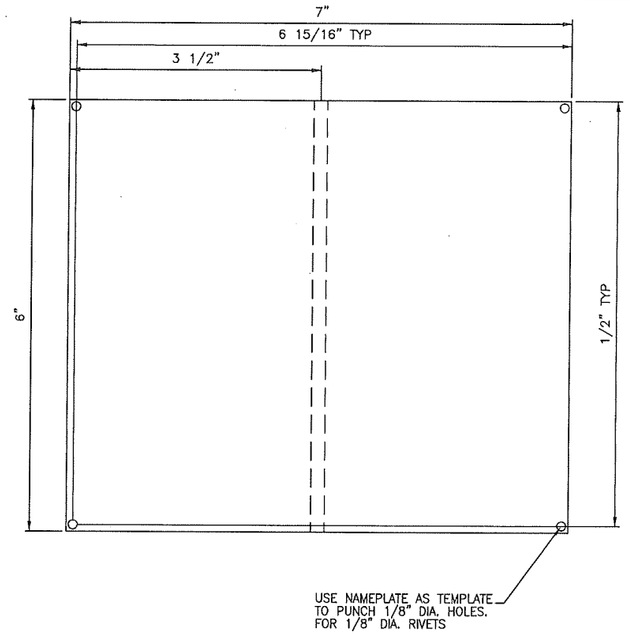

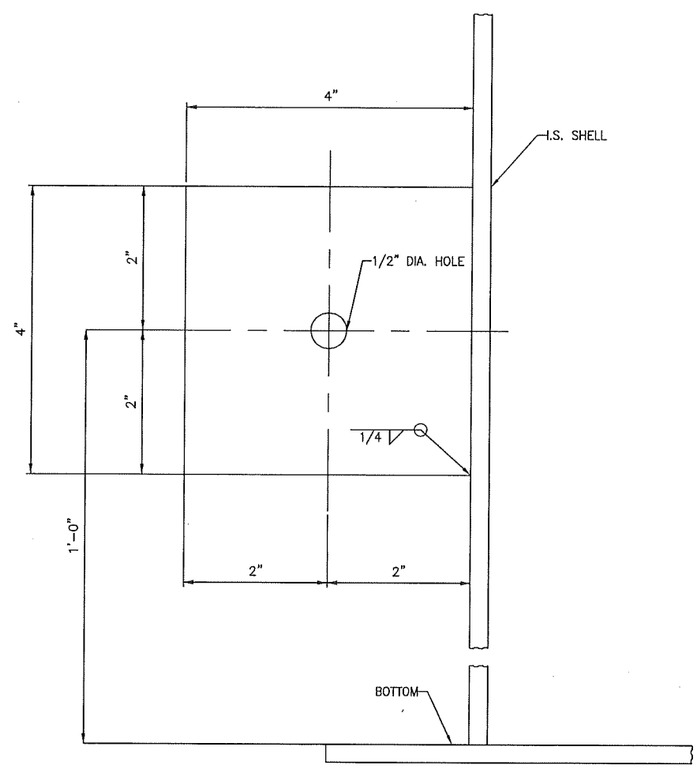

GROUNDING LUG
(2) REQ'D

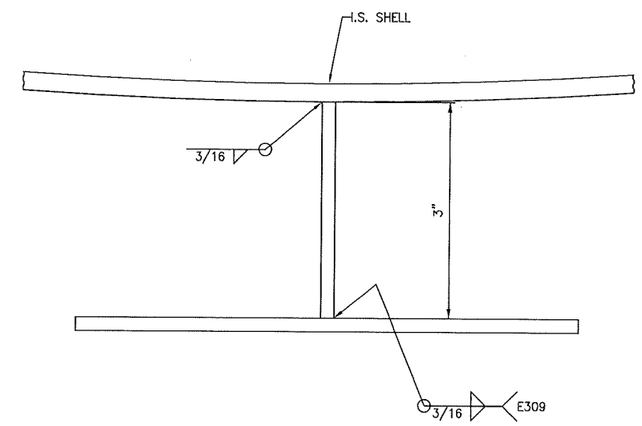

NAMEPLATE BRACKET

WORK INSTRUCTIONS

RECV	CUT ROLL	FIT	WELDED	READY TO COAT	SENT TO VENDOR	COATING COMPLETE	READY TO SHIP	SHIPPED

BILL OF MATERIALS

QTY	SHPG MARK	ASSY QTY	ASSY MARK	DESCRIPTION	LENGTH	SPEC MATL	REMARKS	LBS WEIGHT
1	NP01A			NAMEPLATE ASSEMBLY				[6]
		1	NP01Aa	PL. 3/16" x 6" x	7"	A36		3
		1	NP01Ab	PL. 3/16" x 3" x	6"	A36		2
		4	NP01Ac	1/8" DIA. RIVETS				0
		1	NP01Ad	NAME PLATE NAMEPLATE		SS		1
2	NP01B			GROUNDING LUG				[4]
		1	NP01Ba	PL. 3/8" x 4" x	4"	A36		2

BILL OF MATERIALS LISTED FOR (1) TANK – (2) TANKS REQUIRED.

REV.	BY	DATE	DESCRIPTION
1	EJ	03/23/2015	REVISED TITLE BLOCK
0	EJ	02/16/2015	INITIAL ISSUE

BMT ACQUISITION, LLC
ENGINEERS – FABRICATORS – CONSTRUCTORS
8301 BROADWAY BLVD SE
ALBUQUERQUE, NM 87105-7453
PHONE: 505-563-4800
FAX: 505-563-4799
http://www.bmt-tank.com

T-110 & T-116

NAMEPLATE & G. LUGS
6,000 GAL. WATER STORAGE TANKS
(10.17'DIA. X 11'HGT.) AWWA-D100-11

CUSTOMER: FLITEWAY TECH., INC
PROJECT: EDB INTERIM MEASURE

DRAWN: EJ	JOB No.: 30883
CHECKED: GAV	
DATE: 02/16/2015	SHEET No.: NP01
REVISION: 1	

BMT 30883

TANK CALCULATIONS

6,000 Gal. Water Storage Tanks
T-102 & T-108
(10.17´Dia. x 11´Hgt.) AWWA-D100
For
EDB Interim Measure
Kirtland, AFB

PROJECT ENGINEER

CB&I

☑ FOR APPROVAL ONLY
BROWN-MINNEAPOLIS TANK
ENGINEERING DIVISION

DESIGN ENGINEER

BMT Acquisition, LLC

BROWN-MINNEAPOLIS TANK
ENGINEERS - FABRICATORS - CONSTRUCTORS

10.17´Dia. x 11´ Hgt - FBSSCRT
6000 Gal. Water Tanks

Customer:
Fliteway Technologies, Inc.
Job Number:
30883
Date: 02-18-2015 Rev.: 0

Standard Compliant Errors

Standard Compliant Errors

BROWN-MINNEAPOLIS TANK
ENGINEERS - FABRICATORS - CONSTRUCTORS

10.17´Dia. x 11´ Hgt - FBSSCRT
6000 Gal. Water Tanks

Customer:
Fliteway Technologies, Inc.
Job Number:
30883
Date: 02-18-2015 Rev.: 0

Comments

Comments

Shell

Joint efficiency for all shell courses = 85%. X-rays are required. Quantity of x-rays shall be per Sec. 11.5.

Roof

Roof is butt welded

Wind

Anchorage of the tank for wind is not required

Seismic

Tank is self-anchored
Available freeboard is adequate.
Tank is stable against sliding.

Anchor Bolt and Anchor Chair

Tank is not anchored

BROWN-MINNEAPOLIS TANK
ENGINEERS - FABRICATORS - CONSTRUCTORS

10.17´Dia. x 11´ Hgt - FBSSCRT
6000 Gal. Water Tanks

Customer:
Fliteway Technologies, Inc.
Job Number:
30883
Date: 02-18-2015 Rev.: 0

Design Data

Tank Diameter	10'- 2.0000" (Inside)
Tank Height	11'- 0.0000"
High Liquid Level	10'- 1.0000"
Normal Liquid Level	10'- 1.0000"
Low Liquid Level	0'- 0.0000"
Total Capacity	6,123 gallons
	146 barrels
Working Capacity	6,123 gallons
	146 barrels
Design Standard	AWWA D-100-11
Design Metal Temperature	25 °F
Operating Temperature	100 °F
Design Temperature	100 °F
Roof Live Load	20.00 psf
Roof Design Snow Load	25.00 psf
Additional Roof Loads	0.00 psf
Wind:	
Velocity	100 mph
Importance Factor	1.15
Exposure	C
Seismic:	
Site Class	D
Importance Factor	1.50
Use Group	III
Ss Value	47.00 %
S_1 Value	14.00 %
Vertical Acceleration	0.00 g
Transitional Period (T_L)	6
Specific Gravity	1.000

BROWN-MINNEAPOLIS TANK
ENGINEERS - FABRICATORS - CONSTRUCTORS

Internal Pressure (Design)	Atmospheric
(Operating)	Atmospheric
External Pressure (Design)	Atmospheric
(Operating)	Atmospheric

Corrosion Allowance:

Bottom	0.0000 in
Shell Courses 1 - 1	0.0000 in
Courses 2 - 2	0.0000 in
Roof	0.0000 in
Compression Ring	0.0000 in

All Calculations are to be in the Corroded Condition

Summary

Total Weight of Tank: 4,748 lbs
Total Operating Weight: 55,826 lbs
Total Testing Weight: 55,826 lbs

Bottom

Flat Bottom:
0.2500 in (A36) PL (weight: 884 lbs)

Outside projection = 2.0000 in

Tank bottom is butt welded.

Shell

Shell Course 01: 0.2500 in (A36) PL x 71.0000 in wide (weight: 1,929 lbs)

Shell Course 02: 0.1875 in (A36) PL x 59.0000 in wide (weight: 1,203 lbs)

Self-Supporting Cone Roof

0.1875 in (A36) PL (weight: 630 lbs)

Roof Slope: 2.0000 in 12 ø: 9.4623° Roof Rise: 0.8472 ft

Roof is butt welded

Compression Ring

L2 x2 x1/4 per Detail d (A36)
Weight: 102 lbs

2 inches Vertical leg of rim angle is butt welded to the top of the shell with the horizontal leg turned out

Shell Nozzles

24"Dia. Shell Manway - K

24" API-650 Shell Manhole w/Blind Flange
Elevation: 30.0000 in
Orientation: 0.0000°

Nozzle Neck: Plate
Material Grade: A36
Wall Thickness: 0.2500 in

Flange Material:
A36

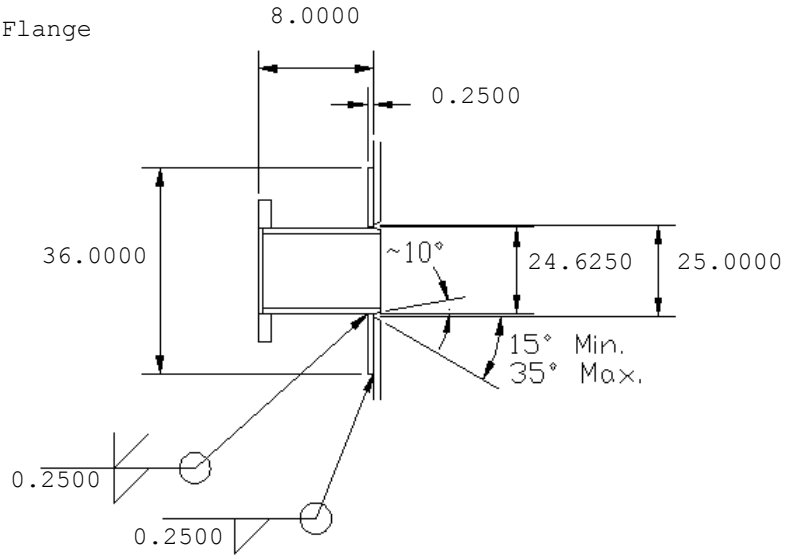

Reinforcing Pad Material:
A36

Flange Thickness: 0.5000 in
Machining Allowance: 0.1875 in

Blind Flange Material Grade: A36

Thickness: 0.3750 in

4"Discharge Nozzle - F

4" 150# SO Flanged Nozzle
Elevation: 6.0000 in
Orientation: 135.0000°

Nozzle Neck: SCH80 Pipe
Material Grade: A53-B
Wall Thickness: 0.3370 in

Flange Material:
A105

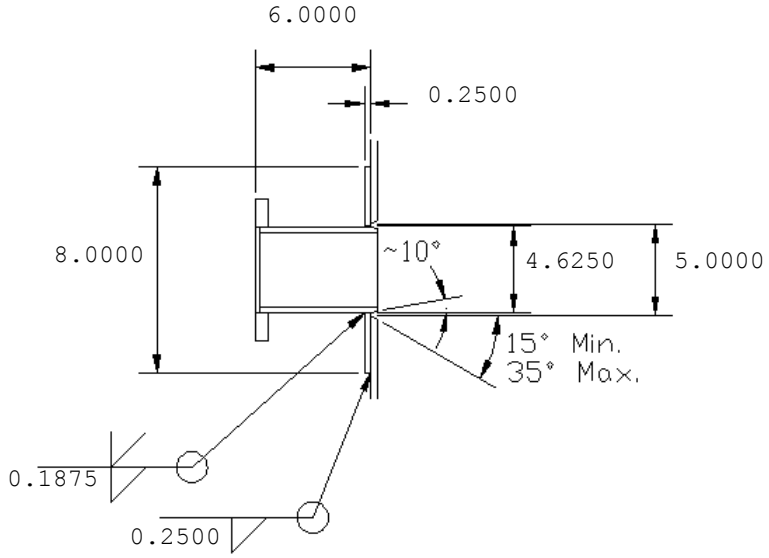

Reinforcing Pad Material:
A36

10.17´Dia. x 11´ Hgt - FBSSCRT
6000 Gal. Water Tanks

Customer:
Fliteway Technologies, Inc.
Job Number:
30883
Date: 02-18-2015 Rev.: 0

4" Discharge Nozzle - G

4" 150# SO Flanged Nozzle
Elevation: 6.0000 in
Orientation: 180.0000°

Nozzle Neck: SCH80 Pipe
Material Grade: A53-B
Wall Thickness: 0.3370 in

Flange Material:
A105

Reinforcing Pad Material:
A36

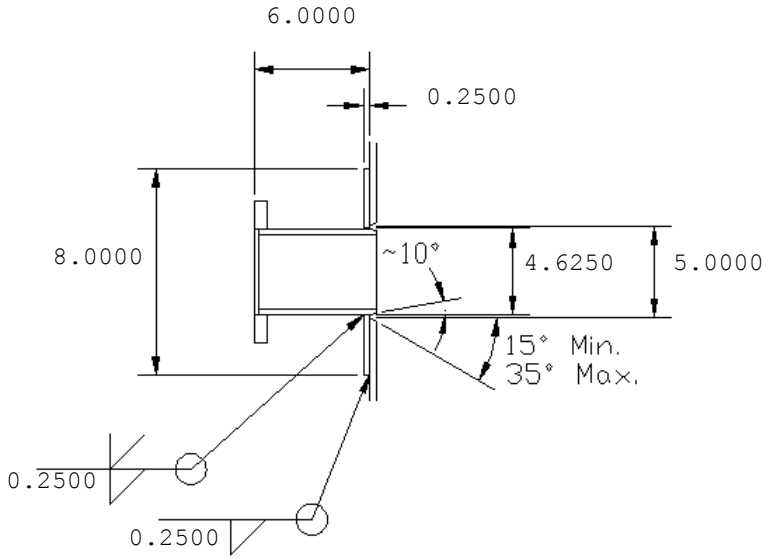

2" Drain Nozzle - H

2" 150# SO Flanged Nozzle
Elevation: 6.0000 in
Orientation: 90.0000°

Nozzle Neck: 160 Pipe
Material Grade: A53-B
Wall Thickness: 0.3430 in

Flange Material:
A105

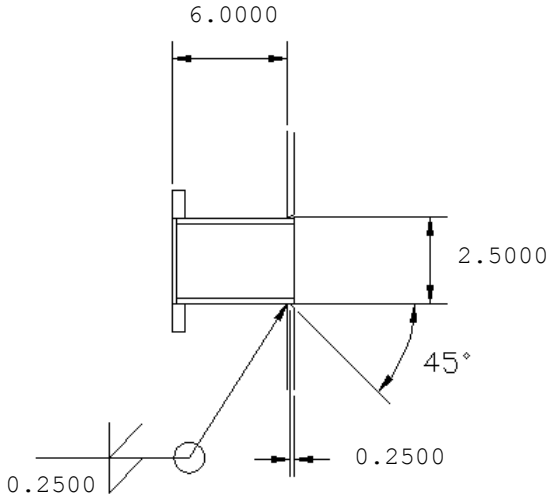

BROWN-MINNEAPOLIS TANK
ENGINEERS - FABRICATORS - CONSTRUCTORS

2" Level Nozzle - I

2" 150# SO Flanged Nozzle
Elevation: 6.0000 in
Orientation: 315.0000°

Nozzle Neck: 160 Pipe
Material Grade: A53-B
Wall Thickness: 0.3430 in

Flange Material:
A105

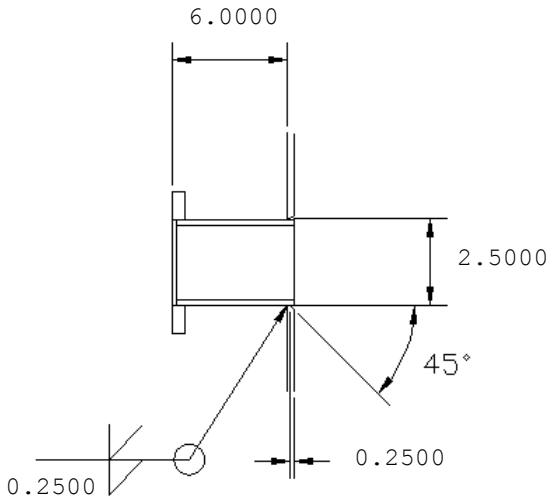

2" Level Nozzle - J

2" 150# SO Flanged Nozzle
Elevation: 10.0000 in
Orientation: 330.0000°

Nozzle Neck: 160 Pipe
Material Grade: A53-B
Wall Thickness: 0.3430 in

Flange Material:
A105

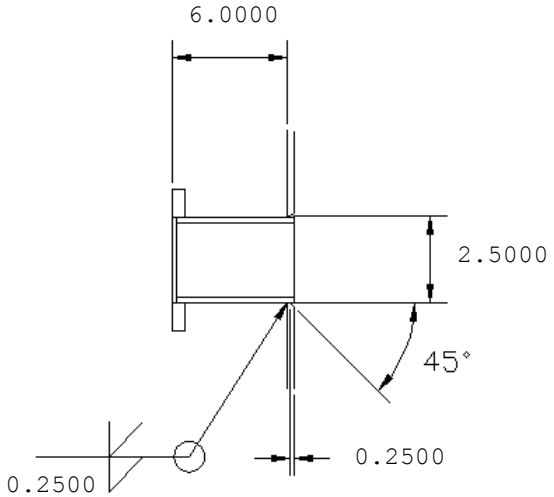

10.17´Dia. x 11´ Hgt - FBSSCRT
6000 Gal. Water Tanks

Customer:
Fliteway Technologies, Inc.
Job Number:
30883
Date: 02-18-2015 Rev.: 0

4" Spare Nozzle - L

4" 150# SO Flanged Nozzle
Elevation: 10.0000 in
Orientation: 45.0000°

Nozzle Neck: SCH80 Pipe
Material Grade: A53-B
Wall Thickness: 0.3370 in

Flange Material:
A105

Reinforcing Pad Material:
A36

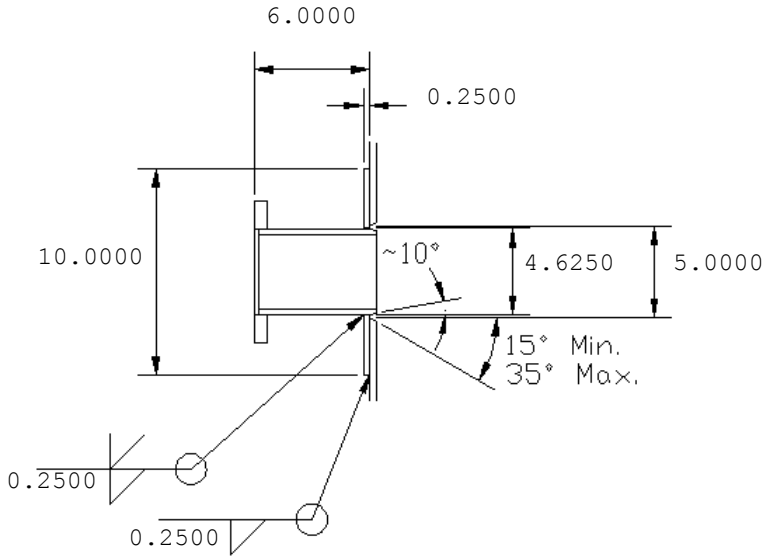

BROWN-MINNEAPOLIS TANK
ENGINEERS - FABRICATORS - CONSTRUCTORS

Bottom Design

Flat Bottom

Material Grade: A36

Thickness (t_b): 0.2500 in

Corrosion Allowance (CA): 0.0000 in

Minimum required outside projection = 1.0000 in

Actual outside projection (p) = 2.0000 in

Minimum thickness per Section 3.10 = 0.2500 in

Tank bottom is butt welded.

Shell Design

Per Eq. 3-40

$$t = \frac{2.6\ hp\ D\ G}{sE} + CA$$

where
Diameter (D) = 10.1667 ft
Specific Gravity (G) = 1.000
Joint Efficiency (E) = 0.85

Shell Course 01

Material Grade:	A36	
Allowable Stress (s):		psi
Shell Height:	5.9167	ft
Corrosion Allowance (CA):	0.0000	in
Liquid Height (hp):	10.0833	ft

$$t = \frac{(2.6)(10.0833)(10.1667)(1.0000)}{(15000.0000)(0.8500)} + 0.0000 = 0.0209 \text{ in}$$

(Per Table 16 - min. t = 0.1875 in)
Actual t = 0.2500 in

Shell Course 02

Material Grade:	A36	
Allowable Stress (s):		psi
Shell Height:	4.9167	ft
Corrosion Allowance (CA):	0.0000	in
Liquid Height (hp):	4.1667	ft

$$t = \frac{(2.6)(4.1667)(10.1667)(1.0000)}{(15000.0000)(0.8500)} + 0.0000 = 0.0086 \text{ in}$$

(Per Table 16 - min. t = 0.1875 in)
Actual t = 0.1875 in

Self-Supporting Cone Roof (Sec. 3.6.2)(per API-650)

Material Grade: A36
Roof Thickness (t_r): 0.1875 in
Corrosion Allowance (CA): 0.0000 in
Tank Diameter (D): 10.1667 ft

Roof is butt welded

Roof Slope: 2.0000 in 12
ø: 9.4623°
Roof Rise: 0.8472 ft

Live Load (L_v): 20.0000 lbf/ft²
Snow Load (S): 25.0000 lbf/ft²
Dead Load (D_L): 7.6575 lbf/ft²
Ext. Pressure (P_e): 0.0000 lbf/ft²

Per R.1(e)(1), $T = D_L + (L_v \text{ or } S) + 0.4P_e =$
$7.6575 + 25.0000 + (0.4)(0.0000) = 32.6575$ lbf/ft²

Per R.1(e)(2), $T = D_L + 0.4(L_v \text{ or } S) + P_e =$
$7.6575 + (0.4)(25.0000) + 0.0000 = 17.6575$ lbf/ft²

Use greater of (1) or (2), T = 32.6575 lbf/ft²

Minimum thickness per AWWA D-100 Section 3.10 =0.1792 in

Per 5.10.5.1:

$$t_r = \frac{D}{400.0000 \sin ø} \sqrt{\left\{ \frac{T}{45.0000} \right\}} + CA =$$

$$\frac{10.1667}{400.0000 \sin(9.4623)} \sqrt{\left\{ \frac{32.6575}{45.0000} \right\}} + 0.0000 = 0.1317 \text{ in}$$

Per 5.10.5.2:

$$A_r = \frac{D^2}{3000.0000 \sin ø} \left\{ \frac{T}{45.0000} \right\} =$$

$$\frac{(10.1667)^2}{3000.0000 \sin(9.4623)} \left\{ \frac{32.6575}{45.0000} \right\} = 0.1521 \text{ in}^2$$

Compression Ring

L2 x2 x1/4 per Detail d

2 inches Vertical leg of rim angle is butt welded to the top of the shell with the horizontal leg turned out

Material: A36

API-650 Figure F-2

R_c = 61.0000 in

Roof Angle (ø) = 9.4623°

$R_2 = R_c/(\sin ø) = 61.0000/(\sin 9.4623) = 371.0485$ in

t_h = 0.1875 in

$w_h = 0.3 \sqrt{(R_2 t_h)} = 0.3 \sqrt{(371.0485 * 0.1875)} = 2.5023$ in
not to exceed 12.0000 in
therefore w_h = 2.5023 in

Available area from roof (A_r) = $t_h w_h$ = 0.1875 * 2.5023 = 0.4692 in²

t_c = 0.1875 in

$w_c = 0.6 \sqrt{(R_c t_c)} = 0.6 \sqrt{(61.0000 * 0.1875)} = 2.0292$ in

Distance from top of angle to top of shell (b) = 2.0000 in
Available area from shell (A_s) = $(w_c - b)t_c$ = (2.0292 - 2.0000) * 0.1875 = 0.0055 in²

t_a = 0.2500 in
Horizontal projection of angle (a_1) = 1.7500 in
Maximum horizontal projection = $16t_a$ = 16 * 0.2500 = 4.0000 in
therefore a_1 = 1.7500 in
Vertical projection of angle (a_2) = 2.0000 in
Maximum vertical projection = w_c = 2.0292 in
therefore a_2 = 2.0000 in
Available area from compression ring (A_c) = $(a_1 + a_2)t_a$ =
(1.7500 + 2.0000)0.2500 = 0.9375 in²

Total available area (A_t) = $A_r + A_s + A_c$ = 0.4692 + 0.0055 + 0.9375 = 1.4121 in²

Wind Calculations

Wind velocity (V) = 100 mph
Tank diameter (D) = 10.1667 ft
Tank height (H) = 11.0000 ft
Importance factor (I) = 1.15
Exposure C

Calculation are in the corroded condition

Calculate average shell thickness:

For each shell course, WT = W x T

(Shell courses are numbered from bottom to top)

Shell Course	W (ft)	Tactual (in)	WT
Angle	0.1667	0.2500	0.0417
2	4.9167	0.1875	0.9219
1	5.9167	0.2500	1.4792
Total:	11.0000		2.4427

Average thickness (t) = WT/W = 2.4427/11.0000 = 0.2221 in

Determine Pw per 3.1.4

For Shell:
Centroid of shell C_s = 5.5000 ft
z = C_s but not less than 15.0000 ft
z = 15.00 ft from bottom of tank
Per ASCE7, zg = 900.0000 ft
α = 9.50
K_z = 2.01 (15.00/900.0000)^(2/9.50) = 0.8489
Per Eq. 3-2, $q_z = 0.00256K_zIV^2$ = (0.00256)(0.8489)(1.1500)(100.0000)² = 24.9911 lbf/ft²
Per Table 2, C_f = 0.60
G = 1.00
Per Eq. 3-1, $P_w = q_zGC_f$ = (24.9911)(1.00)(0.6000) = 14.9947 lbf/ft²
but not less than $30.0000C_f$ = (30.00)(0.6000) = 18.0000 lbf/ft²
Therefore, P_{ws} = 18.0000 lbf/ft²

For roof:

Roof height H_r = 0.8472 ft

Centroid of roof $C_r = H + H_r/3 = 11.0000 + 0.8472/3 = 11.2824$ ft

$z = C_r$ but not less than 15.0000 ft

z = 15.00 ft from bottom of tank

Per ASCE7, zg = 900.0000 ft

$\alpha = 9.50$

$K_z = 2.01\ (15.00/900.0000)^{(2/9.50)} = 0.8489$

Per Eq. 3-2, $q_z = 0.00256 K_z I V^2 = (0.00256)(0.8489)(1.1500)(100.0000)^2 = 24.9911$ lbf/ft²

Per Table 2, $C_f = 0.60$

G = 1.00

Per Eq. 3-1, $P_w = q_z G C_f = (24.9911)(1.00)(0.60) = 14.9947$ lbf/ft²

but not less than $30.0000 C_f = (30.00)(0.60) = 18.0000$ lbf/ft²

Therefore, $P_{wr} = 18.0000$ lbf/ft²

Overturning moment:

Roof exposed area, $A_r = 4.3067$ ft²

Overturning Moment $(M_w) = P_{ws} D H_{Cs} + P_{wr} A_r C_r =$

$= (18.0000)(10.1667)(11.0000)(5.5000) +$

$(18.0000)(4.3067)(11.2824) = 11946.1216$ ft-lbs

Check for tank stability without anchors:

Weight of shell and roof supported by shell (DL) = 3864.0380 lbs

MDL = DL * D/3 = 3864.0380 * 10.1667 / 3 = 13094.7955 ft-lbs

Anchorage of the tank for wind is not required

Determine if intermediate wind girder is required:

For distance 11.0000 ft from top of tank, average thickness (t) = 0.2221 in

Per Eq. 3-36: $h = \dfrac{10625000t}{P_{aw}(D/t)^{1.5}} =$

$$\frac{(10625000)(0.2221)}{(18.0000)(10.1667/0.2221)^{1.5}} = 423.1418 \text{ ft}$$

h > H

Wind girder is not required. Iteration requirements of 3.5.2.1 have been met.

Customer:
Fliteway Technologies, Inc.
Job Number:
30883
Date: 02-18-2015 Rev.: 0

Weights

	New (lbf)	Corroded (lbf)
Product:	51078.2212	51078.2212
Total Shell Plates:	3131.9433	3131.9433
Total Bottom Plates:	884.0854	884.0854
Total Roof Plates:	630.2076	630.2076
Total Live Load:	1623.5925	1623.5925
Total Snow Load:	2029.4907	2029.4907
Total Additional Dead Load:	0.0000	0.0000
Shell Insulation:	0.0000	0.0000
Roof Insulation:	0.0000	0.0000
Total Rafters:	0.0000	0.0000
Total Roof and Framing:	630.2076	630.2076
Total Shell Appurtenances:	0.0000	0.0000
Total Roof Appurtenances:	0.0000	0.0000
Total Roof Appurtenances acting on Shell	0.0000	0.0000
Live Load acting on Shell:	1623.5925	1623.5925
Snow Load acting on Shell:	2029.4907	2029.4907
Total of Roof acting on Shell:	630.2076	630.2076
Total of Roof Structural acting on Shell:	0.0000	0.0000
Total Compression Ring and Shell Stiffener	101.8871	101.8871

Seismic Calculations

Tank diameter (D): 10.1667 ft
Product Height (H): 10.0833 ft
Specific Gravity (G): 1.0000

Tank is self-anchored

Mapped spectral response acceleration (S_s): 0.4700 g
Mapped spectral response acceleration (S_1): 0.1400 g

Vertical earthquake acceleration coefficient (A_v): 0.0625 g

Site Class per Table 25 : D
Seismic Use Group per 13.2.1 : III

From Table 26, F_a = 1.4240
From Table 27, F_v = 2.2400
From Table 24, I_E = 1.5000
From Table 28, R_i = 2.5000
From Table 28, R_c = 1.5000

Scaling factor per 13.2.7.3, U = 2/3

Per Eq. 13-7, $S_{DS} = UF_aS_s = (2/3)(1.4240)(0.4700) = 0.4462$
Per Eq. 13-8, $S_{D1} = UF_vS_1 = (2/3)(2.2400)(0.1400) = 0.2091$

q = 32.2000 ft/s²

13.5.1 First Mode Sloshing Wave Period

Per Eq. 13-22: $T_c = 2\pi \sqrt{\dfrac{D}{\left\{3.68g \tanh\left(\dfrac{3.68H}{D}\right)\right\}}} =$

$$2\pi \sqrt{\frac{10.1667}{\left\{(3.68)(32.2000)\tanh\left(\dfrac{(3.68)(10.0833)}{10.1667}\right)\right\}}} = 1.8417$$

Per Eq. 13-9, $S_{ai} = S_{DS} = 0.4462$

Impulsive spectral acceleration parameter:

Per Eq. 13-17: $A_i = \frac{S_{ai} I_E}{1.4 R_i} = \frac{(0.4462)(1.50)}{1.4(2.5000)} = 0.1912$

and $A_i \geq \frac{0.36 S_1 I_E}{R_i} = \frac{0.36(0.1400)(1.50)}{2.5000} = 0.0302$

Therefore, $A_i = 0.1912$

Convective spectral acceleration parameter:

From Figure 19, $T_L = 6.0000$
Per 13.2.7.3.2, K = 1.5

$T_c \leq T_L$, Per Eq. 13-12

$S_{ac} = \frac{K S_{D1}}{T_c} = \frac{(1.5)(0.2091)}{1.8417} = 0.1703$

However, $S_{ac} \leq S_{DS}$
Therefore, $S_{ac} = 0.1703$

Per Eq. 13-18, $A_c = \frac{S_{ac} I_E}{1.4 R_c} = \frac{(0.1703)(1.5000)}{(1.4)(1.5000)} = 0.1216$

Per 13.5.2.2.1

D/H = 10.1667/10.0833 = 1.0083

Weights:
W_s = 3234 lbs
W_f = 884 lbs
W_r = Roof weight = 630 lbs
W_T = 51078 lbs

D/H < 1.333

Per Eq. 13-25, $W_i = (1.0 - 0.218 D/H) W_T = (1.0 - 0.218 * 1.0083)(51078) = 39851$ lbs

Per Eq. 13-26, $W_c = 0.230 D/H \tanh(3.67 H/D) W_T =$
$(0.230)(1.0083)[\tanh(3.67/1.0083)](51078) = 11829$ lbs

Per 13.5.3.1, Eq. 13-31

$$V_f = \sqrt{\{[A_i(W_s + W_r + W_f + W_i)]^2 + [A_cW_c]^2\}} = \sqrt{\{[(0.1912)(3234 + 630 + 884 + 39851)]^2 + [(0.1216)(11829)]^2\}} = 8649 \text{ lbs}$$

Per 13.5.2.2.2

$D/H < 1.333$

Per Eq. 13-29, $X_i = [0.5 - 0.094D/H]H = [0.5 - (0.094)(1.0083)](10.0833) = 4.0860$ ft

Per Eq. 13-30, $$X_c = \left[1.0 - \frac{\cosh(3.67H/D) - 1}{3.67H/D \sinh(3.67H/D)}\right] H = \left[1.0 - \frac{\cosh(3.67/1.0083) - 1}{(3.67/1.0083)\sinh(3.67/1.0083)}\right](10.0833) = 7.4549 \text{ ft}$$

Per 13.5.3.2.2

$D/H < 1.333$

Per Eq. 13-34, $X_{imf} = [0.500 + 0.600D/H]H = [0.500 + (0.060)(1.0083)](10.0833) = 5.6517$ ft

Per Eq. 13-35, $$X_{cmf} = \left[1.0 - \frac{\cosh(3.67H/D) - 1.937}{3.67H/D \sinh(3.67H/D)}\right] H = \left[1.0 - \frac{\cosh(3.67/1.0083) - 1.937}{(3.67/1.0083)\sinh(3.67/1.0083)}\right](10.0833) = 7.5913 \text{ ft}$$

Per 13.5.2.1, Eq. 13-23

$$M_s = \sqrt{\{[A_i(W_iX_i + W_sX_s + W_rH_t)]^2 + [A_c(W_cX_c)]^2\}} = \sqrt{\{[0.1912(39851*4.0860 + 3234*4.8461 + 630*11.0000)]^2 + [0.1216(11829*7.4549)]^2\}} = 37046 \text{ ft-lbs}$$

Per 13.5.2.2, Eq. 13-32

$$M_{mf} = \sqrt{\{[A_i(W_iX_{imf} + W_sX_s + W_rH_t)]^2 + [A_c(W_cX_{cmf})]^2\}} = \sqrt{\{[0.1912(39851*5.6517 + 3234*4.8461 + 630*11.0000)]^2 + [0.1216(11829*7.5913)]^2\}} = 48633 \text{ ft-lbs}$$

Self-anchored tank (new condition)

Per 13.5.4.2.1

W_s = 3234 lbs
w_{rs} = 19.7313 lbf/ft
t_b = 0.2500 in
t_s = 0.2500 in
$w_t = W_s/(\pi D) + w_{rs} = 3234/(\pi * 10.1667) + 19.7313 = 120.9798$ lbf/ft

Per Eq. 13-37,
$w_L = 7.9 t_b \sqrt{(F_y HG)} =$
$(7.9)(0.2500)\sqrt{[(36000.0000)(10.0833)(1.0000)]} = 1189.9273$ lbf/ft
$\leq 1.28HDG = (1.28)(10.0833)(10.1667)(1.0000) = 131.2178$ lbf/ft
therefore, w_L = 131.2178 lbf/ft

$$J \text{ per Eq. 13-36} = \frac{M_s}{D^2[w_t(1.0 - 0.4A_v) + w_L]} =$$

$$\frac{37046}{(10.1667)^2[120.9798(1.0 - (0.4)(0.0625)) + 131.2178]} = 1.438$$

Shell compression per Eq. 13-40 where J > 0.785

$$\sigma_c = \left[\frac{w_t(1 + 0.4A_v) + w_L}{0.607 - 0.18667(J)^{2.3}} - w_L\right]\frac{1}{12t_s} =$$

$$\left[\frac{120.9798(1 + (0.4)(0.0625)) + 131.2178}{0.607 - 0.18667(1.44)^{2.3}} - 131.2178\right]\frac{1}{(12)(0.2500)}$$

$$= 438.8808 \text{ psi}$$

Allowable Compression Stresses in Shell per 13.5.4.2.4

$R = 12D/2 = 12 * 10.1667/2 = 61.0000$ in
$(t/R)_c$ for Material Class 2 = 0.0035372 (per 3.4.3.1)

For new condition:
$t/R = 0.2500/61.0000 = 0.0041$

$(t/R)_c < t/R \leq 0.125$
Per Eq. 3-13, $F_L = 6925.00 + 886000(t/R)^2 =$
$6925.00 + 886000(0.0041)^2 = 10556.1475$ psi

$P = 0.4330HG = (0.4330)(10.0833)(1.0000) = 4.3661$ psi
$E = 29000000$ psi

$(P/E)(R/t)^2 = (4.3661/29000000)(61.0000/0.2500)^2 = 0.0090$

For $(P/E)(R/t)^2 \leq 0.064$ per Eq. 13-50
$\Delta C_c = 0.72[(P/E)(R/t)^2]^{0.84}$
$= 0.72[(0.0090)^2]^{0.84} = 0.0137$

Per Eq. 13-49
$\Delta\sigma_{cr} = \Delta C_c Et/R = (0.0137)(29000000)(0.2500)/61.0000 = 1630.8670$

Per Eq. 13-47
$\sigma_e = 1.333(\sigma_a + \Delta\sigma_{cr}/2) =$
$1.333(10556.1475 + 1630.8670/2) = 15158.3176$ psi

Freeboard requirements per 13.5.4.4

For $T_c \leq T_L$ per Eq. 13-55
$A_f = KS_{D1}/T_c = (1.5)(0.2091)/1.8417 = 0.1703$

Per Eq. 13-52, Wave Height : $\delta_s = 0.5DA_f = (0.5)(10.1667)(0.1703) = 0.8656$ ft

Available freeboard is adequate.

Per Table 29, minimum freeboard $= 1.0\delta_s = (1.0)(0.8656) = 0.8656$ ft

Tank resistance to sliding per Eq. 13-57
$V_s = \tan 30(W_s + W_r + W_f + W_p)(1.0 - 0.4A_v) =$
$\tan 30(3234 + 630 + 884 + 51078)(1.0 - 0.4 * 0.0625) = 31426$ lbs
$V_f = 8649$ lbs

Tank is stable against sliding.

Hoop Stress per 13.5.4.2.3

G = 1.00
D = 10.1667 ft
H = 10.0833 ft
A_i = 0.1912
A_c = 0.1216
A_v = 0.0625
D/H = 1.0083

Shell Course 01

Y = 10.0833 ft

For D/H < 1.333 and Y ≥ 0.75D, Eq. 13-45

$N_i = 1.39A_iGD^2 = (1.39)(0.1912)(1.00)(10.1667)^2 = 27.4734$ lbf/in

Eq. 13-46

$$N_c = \frac{0.98A_cGD^2\cosh[3.68(H - Y)/D]}{\cosh[3.68H/D]} =$$

$$\frac{(0.98)(0.1216)(1.0000)(10.1667)^2\cosh[3.68(10.0833 - 10.0833)/10.1667]}{\cosh[(3.68)(10.0833/10.1667)]}$$

= 0.6401 lbf/in

$N_h = 2.60DYG = (2.60)(10.1667)(10.0833)(1.00) = 266.5361$ lbf/in

Shell thickness (t) = 0.2500 in

Per Eq. 13-42, $\sigma_s = [\sqrt{\{N_i^2 + N_c^2 + (A_vN_h)^2\}}]/(t) =$
$[\sqrt{\{(27.4734)^2 + (0.6401)^2 + (0.0625 * 266.5361)^2\}}]/(0.2500)$
= 128.5240 psi

$\sigma_T = N_h/t + \sigma_s = 266.5361/(0.2500) + 128.5240 = 1194.6684$ psi

Allowable stress = 1.333SE = (1.333)(15000.0000)(0.8500) = 16995.7500 psi

Minimum required thickness = $(\sigma_T * t)/S_a =$
(1194.6684 * 0.2500)/16995.7500 = 0.0176 in

Shell Course 02

Y = 4.1667 ft

For D/H < 1.333 and Y < 0.75D, Eq. 13-44

$$N_i = 2.77 A_i G D^2 \left[\frac{Y}{0.75D} - 0.5 \left(\frac{Y}{0.75D} \right)^2 \right] =$$

$$(2.77)(0.1912)(1.00)(10.1667)^2 \left[\frac{4.1667}{(0.75)(10.1667)} - 0.5 \left(\frac{4.1667}{(0.75)(10.1667)} \right)^2 \right]$$

= 21.7433 lbf/in

Eq. 13-46

$$N_c = \frac{0.98 A_c G D^2 \cosh[3.68(H - Y)/D]}{\cosh[3.68H/D]} =$$

$$\frac{(0.98)(0.1216)(1.0000)(10.1667)^2 \cosh[3.68(10.0833 - 4.1667)/10.1667]}{\cosh[(3.68)(10.0833/10.1667)]}$$

= 2.7623 lbf/in

$N_h = 2.60DYG = (2.60)(10.1667)(4.1667)(1.00) = 110.1389$ lbf/in

Shell thickness (t) = 0.1875 in

Per Eq. 13-42, $\sigma_s = [\sqrt{\{N_i^2 + N_c^2 + (A_v N_h)^2\}}]/(t) =$
$[\sqrt{\{(21.7433)^2 + (2.7623)^2 + (0.0625 * 110.1389)^2\}}]/(0.1875)$
= 122.5201 psi

$\sigma_T = N_h/t + \sigma_s = 110.1389/(0.1875) + 122.5201 = 709.9275$ psi

Allowable stress = 1.333SE = (1.333)(15000.0000)(0.8500) = 16995.7500 psi

Minimum required thickness = $(\sigma_T * t)/S_a =$
$(709.9275 * 0.1875)/16995.7500 = 0.0078$ in

Shell Nozzles

2" Drain Nozzle - H

Description: 2" 150# SO Flanged Nozzle
Elevation: 6.0000 in
Orientation: 90.0000°
Corrosion Allowance: Cn = 0.0000 in

Nozzle Neck: 160 Pipe
Material Grade: A53-B
Outside Diameter: d = 2.3750 in
Wall Thickness: t_n = 0.3430 in
Outside Projection: Po = 6.0000 in
Inside Projection: Pi = 0.0000 in

Flange Material Grade: A105

Calculate Required Shell Thickness at Nozzle

For Design: tr = 2.6000 * (9.5833 + 0.0000) * 10.1667 * 1.0000/[0.8500 * 15000.0000]
= 0.0199 in

Hoop Stress at Nozzle

Y = 9.5833 ft

D/H < 1.333 and Y ≥ 0.75D

Per Eq. 13-45, $N_i = 1.39A_iGD^2 = (1.39)(0.1912)(1.00)(10.1667)^2 = 27.4734$ lbf/in

Per Eq. 13-46, $N_c = \dfrac{0.98A_cGD^2\cosh[3.68(H - Y)/D]}{\cosh[3.68H/D]} =$

$$\frac{(0.98)(0.1216)(1.0000)(10.1667)^2\cosh[3.68(10.0833 - 9.5833)/10.1667]}{\cosh[(3.68)(10.0833/10.1667)]}$$

= 0.6506 lbf/in

$N_h = 2.60DYG = (2.60)(10.1667)(9.5833)(1.00) = 253.3194$ lbf/in

Shell thickness: t = 0.2500 in

Per Eq. 13-42, $\sigma_T = [N_h + \sqrt{\{N_i^2 + N_c^2 + (A_vN_h)^2\}}]/t =$
$[253.3194 + \sqrt{\{(27.4734)^2 + (0.6506)^2 + (0.0625 * 253.3194)^2\}}]/0.2500$
= 1140.1228 psi

Allowable stress: S_a = 16995.7500 psi

Minimum required thickness = $(\sigma_T * t)/S_a$ =
(1140.1228 * 0.2500)/16995.7500 = 0.0168 in

Required shell thickness for Nozzle Calculations: t_r = 0.0199 in

Reinforcement of Nozzle for Design:
Diameter of Hole in Shell: D_1 = 2.3750 in
Required Area: $A_r = t_r D_s$ = 0.0199 * 2.3750 = 0.0472 in²

Available Reinforcement from shell:
Diameter of Shell available: D_s = 2.3750 in
Shell corrosion allowance: C_s = 0.0000 in
Available Area: $A_{as} = 2(D_s - D_1/2)(t - C_s - t_r)$ =
2 * (2.3750 - 2.3750/2)* (0.2500 - 0.0000 - 0.0199) = 0.5466 in²

Check nozzle attachment strength paths:
Required strength: $W_r = (A_r - A_{as})S_a$ =
(0.0472 - 0.5466) * 15000.0000 = -7490.6413 lbs

Nozzle neck:
Allowable stress: S_n = 15000.0000 psi

Outside fillet weld:
Weld size: W_o = 0.2500 in
Allowable stress: S_o = 15000.0000 psi

Shell Groove weld:
Weld size: W_g = 0.2500 in
Allowable stress: S_g = 15000.0000 psi

Check attachment strength: Outside fillet weld, Groove weld
$W_a = \{0.60 * S_o * \pi * d * 0.707(W_o) + 0.850 * 0.70 * S_g * \pi * d * (W_g - C_s)\}/2 =$
$\{0.60 * 15000.0000 * \pi * 2.3750 * 0.707(0.2500) + 0.850 * 0.70 * 15000.0000 * \pi * 2.3750 * (0.2500 - 0.0000)\}/2 =$
14258.5110 lbs

Check attachment strength: Nozzle neck, Outside fillet weld
$W_a = \{0.80 * 0.875 * S_n * \pi * (t_n - C_n) * (d - t_n - C_n) + 0.60 * S_o * \pi * d * 0.707(W_o)\}/2 =$
$\{0.80 * 0.875 * 15000.0000 * \pi * (0.3430 - 0.0000) * (2.3750 - 0.3430 - 0.0000) + 0.60 * 15000.0000 * \pi * 2.3750 * 0.707(0.2500)\}/2 =$
17429.9947 lbs

Nozzle reinforcement calculations are not required.

2" Level Nozzle - I

Description: 2" 150# SO Flanged Nozzle
Elevation: 6.0000 in
Orientation: 315.0000°
Corrosion Allowance: Cn = 0.0000 in

Nozzle Neck: 160 Pipe
Material Grade: A53-B
Outside Diameter: d = 2.3750 in
Wall Thickness: t_n = 0.3430 in
Outside Projection: Po = 6.0000 in
Inside Projection: Pi = 0.0000 in

Flange Material Grade: A105

Calculate Required Shell Thickness at Nozzle

For Design: tr = 2.6000 * (9.5833 + 0.0000) * 10.1667 * 1.0000/[0.8500 * 15000.0000]
= 0.0199 in

Hoop Stress at Nozzle

Y = 9.5833 ft

D/H < 1.333 and Y ≥ 0.75D

Per Eq. 13-45, $N_i = 1.39A_iGD^2 = (1.39)(0.1912)(1.00)(10.1667)^2 = 27.4734$ lbf/in

Per Eq. 13-46, $N_c = \dfrac{0.98AcGD^2\cosh[3.68(H - Y)/D]}{\cosh[3.68H/D]} =$

$$\frac{(0.98)(0.1216)(1.0000)(10.1667)^2\cosh[3.68(10.0833 - 9.5833)/10.1667]}{\cosh[(3.68)(10.0833/10.1667)]}$$

= 0.6506 lbf/in

$N_h = 2.60DYG = (2.60)(10.1667)(9.5833)(1.00) = 253.3194$ lbf/in

Shell thickness: t = 0.2500 in

Per Eq. 13-42, $\sigma_T = [N_h + \sqrt{\{N_i^2 + N_c^2 + (A_vN_h)^2\}}]/t =$
$[253.3194 + \sqrt{\{(27.4734)^2 + (0.6506)^2 + (0.0625 * 253.3194)^2\}}]/0.2500$
= 1140.1228 psi

Allowable stress: Sa = 16995.7500 psi

Minimum required thickness = $(\sigma_T * t)/Sa =$
(1140.1228 * 0.2500)/16995.7500 = 0.0168 in

Required shell thickness for Nozzle Calculations: t_r = 0.0199 in

Reinforcement of Nozzle for Design:
Diameter of Hole in Shell: D_1 = 2.3750 in
Required Area: $A_r = t_r D_s$ = 0.0199 * 2.3750 = 0.0472 in²

Available Reinforcement from shell:
Diameter of Shell available: D_s = 2.3750 in
Shell corrosion allowance: C_s = 0.0000 in
Available Area: $A_{as} = 2(D_s - D_1/2)(t - C_s - t_r)$ =
2 * (2.3750 - 2.3750/2)* (0.2500 - 0.0000 - 0.0199) = 0.5466 in²

Check nozzle attachment strength paths:
Required strength: $W_r = (A_r - A_{as})S_a$ =
(0.0472 - 0.5466) * 15000.0000 = -7490.6413 lbs

Nozzle neck:
Allowable stress: S_n = 15000.0000 psi

Outside fillet weld:
Weld size: W_o = 0.2500 in
Allowable stress: S_o = 15000.0000 psi

Shell Groove weld:
Weld size: W_g = 0.2500 in
Allowable stress: S_g = 15000.0000 psi

Check attachment strength: Outside fillet weld, Groove weld
$W_a = \{0.60 * S_o * \pi * d * 0.707(W_o) +$
$0.850 * 0.70 * S_g * \pi * d * (W_g - C_s)\}/2 =$
$\{0.60 * 15000.0000 * \pi * 2.3750 * 0.707(0.2500) +$
$0.850 * 0.70 * 15000.0000 * \pi * 2.3750 * (0.2500 - 0.0000)\}/2 =$
14258.5110 lbs

Check attachment strength: Nozzle neck, Outside fillet weld
$W_a = \{0.80 * 0.875 * S_n * \pi * (t_n - C_n) * (d - t_n - C_n) +$
$0.60 * S_o * \pi * d * 0.707(W_o)\}/2 =$
$\{0.80 * 0.875 * 15000.0000 * \pi * (0.3430 - 0.0000) * (2.3750 - 0.3430 - 0.0000) +$
$0.60 * 15000.0000 * \pi * 2.3750 * 0.707(0.2500)\}/2 =$
17429.9947 lbs

Nozzle reinforcement calculations are not required.

2" Level Nozzle - J

Description: 2" 150# SO Flanged Nozzle
Elevation: 10.0000 in
Orientation: 330.0000°
Corrosion Allowance: Cn = 0.0000 in

Nozzle Neck: 160 Pipe
Material Grade: A53-B
Outside Diameter: d = 2.3750 in
Wall Thickness: t_n = 0.3430 in
Outside Projection: Po = 6.0000 in
Inside Projection: Pi = 0.0000 in

Flange Material Grade: A105

Calculate Required Shell Thickness at Nozzle

For Design: tr = 2.6000 * (9.2500 + 0.0000) * 10.1667 * 1.0000/[0.8500 * 15000.0000]
= 0.0192 in

Hoop Stress at Nozzle

Y = 9.2500 ft

D/H < 1.333 and Y ≥ 0.75D

Per Eq. 13-45, $N_i = 1.39A_iGD^2 = (1.39)(0.1912)(1.00)(10.1667)^2 = 27.4734$ lbf/in

Per Eq. 13-46, $N_c = \dfrac{0.98AcGD^2\cosh[3.68(H - Y)/D]}{\cosh[3.68H/D]} =$

$$\frac{(0.98)(0.1216)(1.0000)(10.1667)^2\cosh[3.68(10.0833 - 9.2500)/10.1667]}{\cosh[(3.68)(10.0833/10.1667)]}$$

= 0.6695 lbf/in

$N_h = 2.60DYG = (2.60)(10.1667)(9.2500)(1.00) = 244.5083$ lbf/in

Shell thickness: t = 0.2500 in

Per Eq. 13-42, $\sigma_T = [N_h + \sqrt{\{N_i^2 + N_c^2 + (A_vN_h)^2\}}]/t =$
$[244.5083 + \sqrt{\{(27.4734)^2 + (0.6695)^2 + (0.0625 * 244.5083)^2\}}]/0.2500$
= 1103.7958 psi

Allowable stress: Sa = 16995.7500 psi

Minimum required thickness = $(\sigma_T * t)/Sa =$
(1103.7958 * 0.2500)/16995.7500 = 0.0162 in

Required shell thickness for Nozzle Calculations: t_r = 0.0192 in

Reinforcement of Nozzle for Design:
Diameter of Hole in Shell: D_1 = 2.3750 in
Required Area: $A_r = t_r D_s$ = 0.0192 * 2.3750 = 0.0455 in²

Available Reinforcement from shell:
Diameter of Shell available: D_s = 2.3750 in
Shell corrosion allowance: C_s = 0.0000 in
Available Area: $A_{as} = 2(D_s - D_1/2)(t - C_s - t_r)$ =
2 * (2.3750 - 2.3750/2)* (0.2500 - 0.0000 - 0.0192) = 0.5482 in²

Check nozzle attachment strength paths:
Required strength: $W_r = (A_r - A_{as})S_a$ =
(0.0455 - 0.5482) * 15000.0000 = -7539.8799 lbs

Nozzle neck:
Allowable stress: S_n = 15000.0000 psi

Outside fillet weld:
Weld size: W_o = 0.2500 in
Allowable stress: S_o = 15000.0000 psi

Shell Groove weld:
Weld size: W_g = 0.2500 in
Allowable stress: S_g = 15000.0000 psi

Check attachment strength: Outside fillet weld, Groove weld
$W_a = \{0.60 * S_o * \pi * d * 0.707(W_o) +$
$0.850 * 0.70 * S_g * \pi * d * (W_g - C_s)\}/2 =$
$\{0.60 * 15000.0000 * \pi * 2.3750 * 0.707(0.2500) +$
$0.850 * 0.70 * 15000.0000 * \pi * 2.3750 * (0.2500 - 0.0000)\}/2 =$
14258.5110 lbs

Check attachment strength: Nozzle neck, Outside fillet weld
$W_a = \{0.80 * 0.875 * S_n * \pi * (t_n - C_n) * (d - t_n - C_n) +$
$0.60 * S_o * \pi * d * 0.707(W_o)\}/2 =$
$\{0.80 * 0.875 * 15000.0000 * \pi * (0.3430 - 0.0000) * (2.3750 - 0.3430 - 0.0000) +$
$0.60 * 15000.0000 * \pi * 2.3750 * 0.707(0.2500)\}/2 =$
17429.9947 lbs

Nozzle reinforcement calculations are not required.

24"Dia. Shell Manway - K

Description: 24" API-650 Shell Manhole w/Blind Flange
Elevation: 30.0000 in
Orientation: 0.0000°
Corrosion Allowance: Cn = 0.0000 in

Nozzle Neck: Plate
Material Grade: A36
Outside Diameter: d = 24.5000 in
Wall Thickness: t_n = 0.2500 in
Outside Projection: Po = 8.0000 in
Inside Projection: Pi = 0.0000 in

Reinforcing Pad:
Material Grade: A36
Thickness: tp = 0.2500 in
Outside Diameter: Dp = 36.0000 in

Flange Material Grade: A36

Thickness: 0.5000 in
Machining Allowance: 0.1875 in

Blind Flange Material Grade: A36

Thickness: 0.3750 in

Calculate Required Shell Thickness at Nozzle

For Design: tr = 2.6000 * (7.5833 + 0.0000) * 10.1667 * 1.0000/[0.8500 * 15000.0000]
= 0.0157 in

Hoop Stress at Nozzle

Y = 7.5833 ft

D/H < 1.333 and Y < 0.75D

Per Eq. 13-44, $N_i = 2.77 A_i G D^2 \left[\frac{Y}{0.75D} - 0.5 \left(\frac{Y}{0.75D} \right)^2 \right] =$

$$(2.77)(0.1912)(1.00)(10.1667)^2 \left[\frac{7.5833}{(0.75)(10.1667)} - 0.5 \left(\frac{7.5833}{(0.75)(10.1667)} \right)^2 \right]$$

= 27.3737 lbf/in

Per Eq. 13-46, $N_c = \dfrac{0.98AcGD^2\cosh[3.68(H - Y)/D]}{\cosh[3.68H/D]} =$

$$\frac{(0.98)(0.1216)(1.0000)(10.1667)^2\cosh[3.68(10.0833 - 7.5833)/10.1667]}{\cosh[(3.68)(10.0833/10.1667)]}$$

$= 0.9206$ lbf/in

$N_h = 2.60DYG = (2.60)(10.1667)(7.5833)(1.00) = 200.4528$ lbf/in

Shell thickness: $t = 0.2500$ in

Per Eq. 13-42, $\sigma_T = [N_h + \sqrt{\{N_i^2 + N_c^2 + (A_vN_h)^2\}}]/t =$
$[200.4528 + \sqrt{\{(27.3737)^2 + (0.9206)^2 + (0.0625 * 200.4528)^2\}}]/0.2500$
$= 922.2740$ psi

Allowable stress: $Sa = 16995.7500$ psi

Minimum required thickness = $(\sigma_T * t)/Sa =$
$(922.2740 * 0.2500)/16995.7500 = 0.0136$ in

Required shell thickness for Nozzle Calculations: $t_r = 0.0157$ in

Reinforcement of Nozzle for Design:
Diameter of Hole in Shell: $D_1 = 24.5000$ in
Required Area: $A_r = t_rD_s = 0.0157 * 24.5000 = 0.3852$ in²

Available Reinforcement from shell:
Diameter of Shell available: $D_s = 24.5000$ in
Shell corrosion allowance: $C_s = 0.0000$ in
Available Area: $A_{as} = 2(D_s - D_1/2)(t - C_s - t_r) =$
$2 * (24.5000 - 24.5000/2)* (0.2500 - 0.0000 - 0.0157) = 5.7398$ in²

Available Reinforcement from nozzle neck per Sec. 3.13:
Reduction factor: F_n 1.0000

Available Reinforcement from outside projection:
Projection: L_o = lesser of P_o or $4t_n = 1.0000$ in
Available Area: $A_{ano} = 2F_nL_o(t_n - C_n) =$
$2 * 1.0000 * 1.0000 * (0.2500 - 0.0000) = 0.5000$ in²

Available Reinforcement from portion in shell:
Available Area: $A_{an} = 2F_n(t - C_s)(t_n - C_n) =$
$2 * 1.0000 * (0.2500 - 0.0000) * (0.2500 - 0.0000) = 0.1250$ in²

Available Reinforcement from reinforcing pad:

Reduction factor: $F_p = 1.0000$

Reinforcing pad outside limit: L_{po} = 36.0000 in
Reinforcing pad inside diameter: L_{pi} = 24.6250 in
Available Area: $A_{arp} = F_p(L_{po} - L_{pi})(t_p)$ =
1.0000 * (36.0000 - 24.6250) * 0.2500 = 2.8438 in²

Total available area of reinforcement: A_{at} = 9.2086 in²

Check nozzle attachment strength paths:

Required strength: $W_r = (A_r - A_{as})S_a$ =
(0.3852 - 5.7398) * 15000.0000 = -80319.4869 lbs

Nozzle neck:
Allowable stress: S_n = 15000.0000 psi

Outside fillet weld:
Weld size: W_o = 0.2500 in
Allowable stress: S_o = 15000.0000 psi

Shell Groove weld:
Weld size: W_g = 0.2500 in
Allowable stress: S_g = 15000.0000 psi

Reinforcing pad fillet weld:
Weld size: W_p = 0.2500 in
Allowable stress: S_p = 15000.0000 psi

Check attachment strength: Outside fillet weld, Groove weld

W_a = {0.60 * S_o * π * d * 0.707(W_o) +
0.850 * 0.70 * S_g * π * d * (W_g - C_s)}/2 =
{0.60 * 15000.0000 * π * 24.5000 * 0.707(0.2500) +
0.850 * 0.70 * 15000.0000 * π * 24.5000 * (0.2500 - 0.0000)}/2 =
147087.7972 lbs

Check attachment strength: Repad fillet weld, Groove weld

W_a = {0.60 * S_p * π * D_p * 0.707(W_p) +
0.850 * 0.70 * S_g * π * d * (W_g - C_s)}/2 =
{0.60 * 15000.0000 * π * 36.0000 * 0.707(0.2500) +
0.850 * 0.70 * 15000.0000 * π * 24.5000 * (0.2500 - 0.0000)}/2 =
175823.3562 lbs

Check attachment strength: Nozzle neck, Repad fillet weld

W_a = {0.80 * 0.875 * S_n * π * (t_n - C_n) * (d - t_n - C_n) +
0.60 * S_p * π * D_p * 0.707(W_p)}/2 =
{0.80 * 0.875 * 15000.0000 * π * (0.2500 - 0.0000) * (24.5000 - 0.2500 - 0.0000) +
0.60 * 15000.0000 * π * 36.0000 * 0.707(0.2500)}/2 =
189945.7969 lbs

4" Discharge Nozzle - G

Description: 4" 150# SO Flanged Nozzle
Elevation: 6.0000 in
Orientation: 180.0000°
Corrosion Allowance: Cn = 0.0000 in

Nozzle Neck: SCH80 Pipe
Material Grade: A53-B
Outside Diameter: d = 4.5000 in
Wall Thickness: t_n = 0.3370 in
Outside Projection: Po = 6.0000 in
Inside Projection: Pi = 0.0000 in

Reinforcing Pad:
Material Grade: A36
Thickness: tp = 0.2500 in
Outside Diameter: Dp = 8.0000 in

Flange Material Grade: A105

Calculate Required Shell Thickness at Nozzle

For Design: tr = 2.6000 * (9.5833 + 0.0000) * 10.1667 * 1.0000/[0.8500 * 15000.0000]
= 0.0199 in

Hoop Stress at Nozzle

Y = 9.5833 ft

D/H < 1.333 and Y ≥ 0.75D

Per Eq. 13-45, $N_i = 1.39A_iGD^2 = (1.39)(0.1912)(1.00)(10.1667)^2 = 27.4734$ lbf/in

Per Eq. 13-46, $N_c = \dfrac{0.98A_cGD^2\cosh[3.68(H - Y)/D]}{\cosh[3.68H/D]} =$

$$\frac{(0.98)(0.1216)(1.0000)(10.1667)^2\cosh[3.68(10.0833 - 9.5833)/10.1667]}{\cosh[(3.68)(10.0833/10.1667)]}$$

= 0.6506 lbf/in

$N_h = 2.60DYG = (2.60)(10.1667)(9.5833)(1.00) = 253.3194$ lbf/in

Shell thickness: t = 0.2500 in

Per Eq. 13-42, $\sigma_T = [N_h + \sqrt{\{N_i^2 + N_c^2 + (A_vN_h)^2\}}]/t =$
$[253.3194 + \sqrt{\{(27.4734)^2 + (0.6506)^2 + (0.0625 * 253.3194)^2\}}]/0.2500$
= 1140.1228 psi

Allowable stress: S_a = 16995.7500 psi

Minimum required thickness = (σ_T * t)/Sa =
(1140.1228 * 0.2500)/16995.7500 = 0.0168 in

Required shell thickness for Nozzle Calculations: t_r = 0.0199 in

Reinforcement of Nozzle for Design:
Diameter of Hole in Shell: D_1 = 4.5000 in
Required Area: $A_r = t_r D_s$ = 0.0199 * 4.5000 = 0.0894 in²

Available Reinforcement from shell:
Diameter of Shell available: D_s = 4.5000 in
Shell corrosion allowance: C_s = 0.0000 in
Available Area: $A_{as} = 2(D_s - D_1/2)(t - C_s - t_r)$ =
2 * (4.5000 - 4.5000/2)* (0.2500 - 0.0000 - 0.0199) = 1.0356 in²

Available Reinforcement from nozzle neck per Sec. 3.13:

Reduction factor: F_n 1.0000

Available Reinforcement from outside projection:
Projection: L_o = lesser of P_o or $4t_n$ = 1.3480 in
Available Area: $A_{ano} = 2F_nL_o(t_n - C_n)$ =
2 * 1.0000 * 1.3480 * (0.3370 - 0.0000) = 0.9086 in²

Available Reinforcement from portion in shell:
Available Area: $A_{an} = 2F_n(t - C_s)(t_n - C_n)$ =
2 * 1.0000 * (0.2500 - 0.0000) * (0.3370 - 0.0000) = 0.1685 in²

Available Reinforcement from reinforcing pad:

Reduction factor: F_p = 1.0000

Reinforcing pad outside limit: L_{po} = 8.0000 in
Reinforcing pad inside diameter: L_{pi} = 4.6250 in
Available Area: $A_{arp} = F_p(L_{po} - L_{pi})(t_p)$ =
1.0000 * (8.0000 - 4.6250) * 0.2500 = 0.8438 in²

Total available area of reinforcement: A_{at} = 2.9564 in²

Check nozzle attachment strength paths:
Required strength: $W_r = (A_r - A_{as})S_a$ =
(0.0894 - 1.0356) * 15000.0000 = -14192.7941 lbs

Nozzle neck:
Allowable stress: S_n = 15000.0000 psi

Outside fillet weld:
Weld size: W_o = 0.2500 in
Allowable stress: S_o = 15000.0000 psi

Shell Groove weld:
Weld size: W_g = 0.2500 in
Allowable stress: S_g = 15000.0000 psi

Reinforcing pad fillet weld:
Weld size: W_p = 0.2500 in
Allowable stress: S_p = 15000.0000 psi

Check attachment strength: Outside fillet weld, Groove weld

$$W_a = \{0.60 * S_o * \pi * d * 0.707(W_o) + 0.850 * 0.70 * S_g * \pi * d * (W_g - C_s)\}/2 =$$

$$\{0.60 * 15000.0000 * \pi * 4.5000 * 0.707(0.2500) + 0.850 * 0.70 * 15000.0000 * \pi * 4.5000 * (0.2500 - 0.0000)\}/2 =$$

27016.1260 lbs

Check attachment strength: Repad fillet weld, Groove weld

$$W_a = \{0.60 * S_p * \pi * D_p * 0.707(W_p) + 0.850 * 0.70 * S_g * \pi * d * (W_g - C_s)\}/2 =$$

$$\{0.60 * 15000.0000 * \pi * 8.0000 * 0.707(0.2500) + 0.850 * 0.70 * 15000.0000 * \pi * 4.5000 * (0.2500 - 0.0000)\}/2 =$$

35761.7309 lbs

Check attachment strength: Nozzle neck, Repad fillet weld

$$W_a = \{0.80 * 0.875 * S_n * \pi * (t_n - C_n) * (d - t_n - C_n) + 0.60 * S_p * \pi * D_p * 0.707(W_p)\}/2 =$$

$$\{0.80 * 0.875 * 15000.0000 * \pi * (0.3370 - 0.0000) * (4.5000 - 0.3370 - 0.0000) + 0.60 * 15000.0000 * \pi * 8.0000 * 0.707(0.2500)\}/2 =$$

43129.0021 lbs

4" Spare Nozzle - L

Description: 4" 150# SO Flanged Nozzle
Elevation: 10.0000 in
Orientation: 45.0000°
Corrosion Allowance: Cn = 0.0000 in

Nozzle Neck: SCH80 Pipe
Material Grade: A53-B
Outside Diameter: d = 4.5000 in
Wall Thickness: t_n = 0.3370 in
Outside Projection: Po = 6.0000 in
Inside Projection: Pi = 0.0000 in

Reinforcing Pad:
Material Grade: A36
Thickness: tp = 0.2500 in
Outside Diameter: Dp = 10.0000 in

Flange Material Grade: A105

Calculate Required Shell Thickness at Nozzle

For Design: tr = 2.6000 * (9.2500 + 0.0000) * 10.1667 * 1.0000/[0.8500 * 15000.0000]
= 0.0192 in

Hoop Stress at Nozzle

Y = 9.2500 ft

D/H < 1.333 and Y ≥ 0.75D

Per Eq. 13-45, $N_i = 1.39A_iGD^2 = (1.39)(0.1912)(1.00)(10.1667)^2 = 27.4734$ lbf/in

Per Eq. 13-46, $N_c = \dfrac{0.98A_cGD^2\cosh[3.68(H - Y)/D]}{\cosh[3.68H/D]} =$

$$\frac{(0.98)(0.1216)(1.0000)(10.1667)^2\cosh[3.68(10.0833 - 9.2500)/10.1667]}{\cosh[(3.68)(10.0833/10.1667)]}$$

= 0.6695 lbf/in

$N_h = 2.60DYG = (2.60)(10.1667)(9.2500)(1.00) = 244.5083$ lbf/in

Shell thickness: t = 0.2500 in

Per Eq. 13-42, $\sigma_T = [N_h + \sqrt{\{N_i^2 + N_c^2 + (A_vN_h)^2\}}]/t =$
$[244.5083 + \sqrt{\{(27.4734)^2 + (0.6695)^2 + (0.0625 * 244.5083)^2\}}]/0.2500$
= 1103.7958 psi

Allowable stress: S_a = 16995.7500 psi

Minimum required thickness = (σ_T * t)/Sa =
(1103.7958 * 0.2500)/16995.7500 = 0.0162 in

Required shell thickness for Nozzle Calculations: t_r = 0.0192 in

Reinforcement of Nozzle for Design:
Diameter of Hole in Shell: D_1 = 4.5000 in
Required Area: $A_r = t_r D_s$ = 0.0192 * 4.5000 = 0.0863 in²

Available Reinforcement from shell:
Diameter of Shell available: D_s = 4.5000 in
Shell corrosion allowance: C_s = 0.0000 in
Available Area: $A_{as} = 2(D_s - D_1/2)(t - C_s - t_r)$ =
2 * (4.5000 - 4.5000/2)* (0.2500 - 0.0000 - 0.0192) = 1.0387 in²

Available Reinforcement from nozzle neck per Sec. 3.13:

Reduction factor: F_n 1.0000

Available Reinforcement from outside projection:
Projection: L_o = lesser of P_o or $4t_n$ = 1.3480 in
Available Area: $A_{ano} = 2F_nL_o(t_n - C_n)$ =
2 * 1.0000 * 1.3480 * (0.3370 - 0.0000) = 0.9086 in²

Available Reinforcement from portion in shell:
Available Area: $A_{an} = 2F_n(t - C_s)(t_n - C_n)$ =
2 * 1.0000 * (0.2500 - 0.0000) * (0.3370 - 0.0000) = 0.1685 in²

Available Reinforcement from reinforcing pad:

Reduction factor: F_p = 1.0000

Reinforcing pad outside limit: L_{po} = 9.0000 in
Reinforcing pad inside diameter: L_{pi} = 4.6250 in
Available Area: $A_{arp} = F_p(L_{po} - L_{pi})(t_p)$ =
1.0000 * (9.0000 - 4.6250) * 0.2500 = 1.0938 in²

Total available area of reinforcement: A_{at} = 3.2095 in²

Check nozzle attachment strength paths:
Required strength: $W_r = (A_r - A_{as})S_a$ =
(0.0863 - 1.0387) * 15000.0000 = -14286.0882 lbs

Nozzle neck:
Allowable stress: S_n = 15000.0000 psi

Outside fillet weld:
Weld size: W_o = 0.2500 in
Allowable stress: S_o = 15000.0000 psi

Shell Groove weld:
Weld size: W_g = 0.2500 in
Allowable stress: S_g = 15000.0000 psi

Reinforcing pad fillet weld:
Weld size: W_p = 0.2500 in
Allowable stress: S_p = 15000.0000 psi

Check attachment strength: Outside fillet weld, Groove weld

$$W_a = \{0.60 * S_o * \pi * d * 0.707(W_o) + 0.850 * 0.70 * S_g * \pi * d * (W_g - C_s)\}/2 =$$

$$\{0.60 * 15000.0000 * \pi * 4.5000 * 0.707(0.2500) + 0.850 * 0.70 * 15000.0000 * \pi * 4.5000 * (0.2500 - 0.0000)\}/2 =$$

27016.1260 lbs

Check attachment strength: Repad fillet weld, Groove weld

$$W_a = \{0.60 * S_p * \pi * D_p * 0.707(W_p) + 0.850 * 0.70 * S_g * \pi * d * (W_g - C_s)\}/2 =$$

$$\{0.60 * 15000.0000 * \pi * 10.0000 * 0.707(0.2500) + 0.850 * 0.70 * 15000.0000 * \pi * 4.5000 * (0.2500 - 0.0000)\}/2 =$$

40759.2194 lbs

Check attachment strength: Nozzle neck, Repad fillet weld

$$W_a = \{0.80 * 0.875 * S_n * \pi * (t_n - C_n) * (d - t_n - C_n) + 0.60 * S_p * \pi * D_p * 0.707(W_p)\}/2 =$$

$$\{0.80 * 0.875 * 15000.0000 * \pi * (0.3370 - 0.0000) * (4.5000 - 0.3370 - 0.0000) + 0.60 * 15000.0000 * \pi * 10.0000 * 0.707(0.2500)\}/2 =$$

48126.4906 lbs

4"Discharge Nozzle - F

Description: 4" 150# SO Flanged Nozzle
Elevation: 6.0000 in
Orientation: 135.0000°
Corrosion Allowance: Cn = 0.0000 in

Nozzle Neck: SCH80 Pipe
Material Grade: A53-B
Outside Diameter: d = 4.5000 in
Wall Thickness: t_n = 0.3370 in
Outside Projection: Po = 6.0000 in
Inside Projection: Pi = 0.0000 in

Reinforcing Pad:
Material Grade: A36
Thickness: tp = 0.2500 in
Outside Diameter: Dp = 8.0000 in

Flange Material Grade: A105

Calculate Required Shell Thickness at Nozzle

For Design: tr = 2.6000 * (9.5833 + 0.0000) * 10.1667 * 1.0000/[0.8500 * 15000.0000]
= 0.0199 in

Hoop Stress at Nozzle

Y = 9.5833 ft

D/H < 1.333 and Y ≥ 0.75D

Per Eq. 13-45, $N_i = 1.39A_iGD^2 = (1.39)(0.1912)(1.00)(10.1667)^2 = 27.4734$ lbf/in

Per Eq. 13-46, $N_c = \dfrac{0.98A_cGD^2\cosh[3.68(H - Y)/D]}{\cosh[3.68H/D]} =$

$$\frac{(0.98)(0.1216)(1.0000)(10.1667)^2\cosh[3.68(10.0833 - 9.5833)/10.1667]}{\cosh[(3.68)(10.0833/10.1667)]}$$

= 0.6506 lbf/in

$N_h = 2.60DYG = (2.60)(10.1667)(9.5833)(1.00) = 253.3194$ lbf/in

Shell thickness: t = 0.2500 in

Per Eq. 13-42, $\sigma_T = [N_h + \sqrt{\{N_i^2 + N_c^2 + (A_vN_h)^2\}}]/t =$
$[253.3194 + \sqrt{\{(27.4734)^2 + (0.6506)^2 + (0.0625 * 253.3194)^2\}}]/0.2500$
= 1140.1228 psi

Allowable stress: S_a = 16995.7500 psi

Minimum required thickness = (σ_T * t)/Sa =
(1140.1228 * 0.2500)/16995.7500 = 0.0168 in

Required shell thickness for Nozzle Calculations: t_r = 0.0199 in

Reinforcement of Nozzle for Design:
Diameter of Hole in Shell: D_1 = 4.5000 in
Required Area: $A_r = t_r D_s$ = 0.0199 * 4.5000 = 0.0894 in²

Available Reinforcement from shell:
Diameter of Shell available: D_s = 4.5000 in
Shell corrosion allowance: C_s = 0.0000 in
Available Area: $A_{as} = 2(D_s - D_1/2)(t - C_s - t_r)$ =
2 * (4.5000 - 4.5000/2)* (0.2500 - 0.0000 - 0.0199) = 1.0356 in²

Available Reinforcement from nozzle neck per Sec. 3.13:

Reduction factor: F_n 1.0000

Available Reinforcement from outside projection:
Projection: L_o = lesser of P_o or $4t_n$ = 1.3480 in
Available Area: $A_{ano} = 2F_nL_o(t_n - C_n)$ =
2 * 1.0000 * 1.3480 * (0.3370 - 0.0000) = 0.9086 in²

Available Reinforcement from portion in shell:
Available Area: $A_{an} = 2F_n(t - C_s)(t_n - C_n)$ =
2 * 1.0000 * (0.2500 - 0.0000) * (0.3370 - 0.0000) = 0.1685 in²

Available Reinforcement from reinforcing pad:

Reduction factor: F_p = 1.0000

Reinforcing pad outside limit: L_{po} = 8.0000 in
Reinforcing pad inside diameter: L_{pi} = 4.6250 in
Available Area: $A_{arp} = F_p(L_{po} - L_{pi})(t_p)$ =
1.0000 * (8.0000 - 4.6250) * 0.2500 = 0.8438 in²

Total available area of reinforcement: A_{at} = 2.9564 in²

Check nozzle attachment strength paths:
Required strength: $W_r = (A_r - A_{as})S_a$ =
(0.0894 - 1.0356) * 15000.0000 = -14192.7941 lbs

Nozzle neck:
Allowable stress: S_n = 15000.0000 psi

Outside fillet weld:
Weld size: W_o = 0.1875 in
Allowable stress: S_o = 15000.0000 psi

Shell Groove weld:
Weld size: W_g = 0.2500 in
Allowable stress: S_g = 15000.0000 psi

Reinforcing pad fillet weld:
Weld size: W_p = 0.2500 in
Allowable stress: S_p = 15000.0000 psi

Check attachment strength: Outside fillet weld, Groove weld

$$W_a = \{0.60 * S_o * \pi * d * 0.707(W_o) + 0.850 * 0.70 * S_g * \pi * d * (W_g - C_s)\}/2 =$$

$$\{0.60 * 15000.0000 * \pi * 4.5000 * 0.707(0.1875) + 0.850 * 0.70 * 15000.0000 * \pi * 4.5000 * (0.2500 - 0.0000)\}/2 =$$

24205.0387 lbs

Check attachment strength: Repad fillet weld, Groove weld

$$W_a = \{0.60 * S_p * \pi * D_p * 0.707(W_p) + 0.850 * 0.70 * S_g * \pi * d * (W_g - C_s)\}/2 =$$

$$\{0.60 * 15000.0000 * \pi * 8.0000 * 0.707(0.2500) + 0.850 * 0.70 * 15000.0000 * \pi * 4.5000 * (0.2500 - 0.0000)\}/2 =$$

35761.7309 lbs

Check attachment strength: Nozzle neck, Repad fillet weld

$$W_a = \{0.80 * 0.875 * S_n * \pi * (t_n - C_n) * (d - t_n - C_n) + 0.60 * S_p * \pi * D_p * 0.707(W_p)\}/2 =$$

$$\{0.80 * 0.875 * 15000.0000 * \pi * (0.3370 - 0.0000) * (4.5000 - 0.3370 - 0.0000) + 0.60 * 15000.0000 * \pi * 8.0000 * 0.707(0.2500)\}/2 =$$

43129.0021 lbs

Foundation Loads

Dead Load = 121 lbf/ft
Dead Load + Live Load = 172 lbf/ft
Dead Load + Snow Load = 185 lbf/ft
Wind Load + Dead Load = 268 lbf/ft

(Wind Foundation Moment = 11,946 ft-lbs)
(Wind Horizontal Force = 2,091 lbs)

Seismic Load + Dead Load (ringwall foundation) = 580 lbf/ft
Seismic Load + Dead Load (slab foundation) = 723 lbf/ft

(Note: For Seismic the dead load has a portion of the vertical acceleration added to it and includes a portion of the snow load)
(Seismic Overturning Moment (ringwall) (M_{rw}) = 37,046 ft-lbs)
(Seismic Overturning Moment (slab) (M_s) = 48,633 ft-lbs)

(Seismic Horizontal Force = 8,649 lbs)

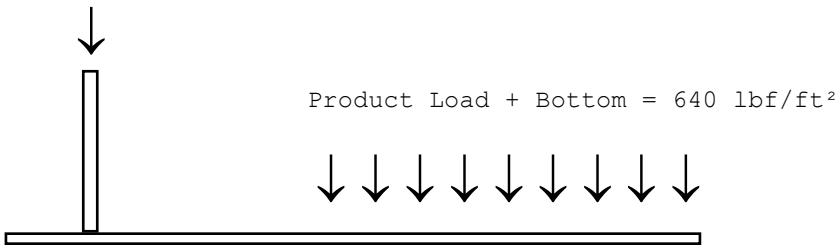

Total Weight of Tank: 4,748 lbs
Total Operating Weight: 55,826 lbs
Total Testing Weight: 55,826 lbs

BROWN-MINNEAPOLIS TANK
ENGINEERS - FABRICATORS - CONSTRUCTORS

BMT 30883

TANK PAINT SCHEDULE

FOR

6,000 Gal. Water Tanks
T-102 & T-108
For
EDB Interim Measure Project
Kirtland AFB
Albuquerque, New Mexico

☑ FOR APPROVAL ONLY
BROWN-MINNEAPOLIS TANK
ENGINEERING DIVISION

8301 Broadway Blvd. SE, Albuquerque, NM 87105 • (505) 563-4800 • Fax (505) 563-4799

BROWN-MINNEAPOLIS TANK
ENGINEERS - FABRICATORS - CONSTRUCTORS

COATING SCHEDULE

EDB Interim Measure Project
6,000 Gal. Water Tanks T-102 and T-108
Kirtland AFB, Albuquerque, NM

INTERIOR TANK PAINT SYSTEM:

TYPE OF PAINT	NO. OF COATS	D.F.T.
1st Coat – Sherwin-Williams MACROPOXY Fast Curing Epoxy (Mill White) (Shop Applied)	One	3 to 5 Mils
2nd Coat – Sherwin-Williams MACROPOXY Fast Curing Epoxy (Light Blue) (Shop Applied)	One	3 to 5 Mils
	TOTAL (Min) . . . . 6 to 10 MILS	

METHOD OF APPLICATION: AIRLESS SPRAY, APPLICATION.
SURFACE PREPARATION: SSPC-SP10, "NEAR WHITE METAL BLAST CLEANING" (SEE DETAILS ON PAGE-2)

---------- * ----------

EXTERIOR TANK PAINT SYSTEM:

TYPE OF PAINT	NO. OF COATS	D.F.T.
1st Coat Sherwin-Williams Recoatable Epoxy Primer (Light Gray) (Shop Applied)	One	4 to 6 Mils
2nd Coat – Sherwin-Williams ACROLON 218 HS Acrylic Polyurethane (Color: TBD) (Shop Applied)	One	3 to 6 Mils
	TOTAL (Min) . . . . .7 to12 MILS	

METHOD OF APPLICATION: AIRLESS SPRAY, APPLICATION.
SURFACE PREPARATION: SSPC-SP6, "COMMERCIAL BLAST CLEANING" (SEE DETAILS ON PAGE-2)

Color Selection: _____ Date of Approval: _____

BROWN-MINNEAPOLIS TANK
ENGINEERS - FABRICATORS - CONSTRUCTORS

SURFACE PREPARATION

INTERIOR:
The interior surfaces of the tank will be cleaned by sandblasting in the shop to remove mil scale in accordance with SSPC-SP10, Near White Blast Cleaning. Prepared surfaces will be coated with 3 to 5 mils of **Sherwin-Williams, MACROPOXY 646 Epoxy** (Mill White), followed by a finish coat of **Sherwin-Williams MACROPOXY 646 Epoxy** (Light Blue) of 3 to 5 mils for a total dry film thickness of 6 to 10 mils (DFT).

EXTERIOR:
The exterior surfaces of the tank will be cleaned by sandblasting to remove mil scale in accordance with SSPC-SP6, Commercial Blast Cleaning. Shop prepared surfaces will be coated with 4 to 6 mils of **Sherwin-Williams, Recoatable Epoxy Primer** (Light Gray), followed by a finish coat of **Sherwin-Williams, ACROLON 218 HS Acrylic Polyurethane** of 3 to 6 mils (color to be selected by the owner per Sherwin-Williams color chart) for a total dry film thickness of 7 to 12 mils (DFT).

NOTES:

- Application of two (2) or three (3) coat build-up system for tank structure surfaces will follow coat manufacturer's recommendation for drying time between coats of paint.

- Measurement of dry film thickness to be in accordance with SSPC-PA_2, excluding Section 5.2.2, Maximum Thickness.

REV-0; 2/18/2015

Protective & Marine Coatings

Classified
Drinking Water System Component ANSI/NSF 61 3JGH
Water Quality

MACROPOXY® 646 PW
POTABLE WATER EPOXY

PART A	B58WX610	MILL WHITE
PART A	B58LX600	LIGHT BLUE
PART B	B58VX600	HARDENER
PART B	B58VX605	OAP HARDENER

Revised 5/11

PRODUCT INFORMATION

4.56

PRODUCT DESCRIPTION

MACROPOXY 646 PW EPOXY is a high solids, high build, fast drying, polyamide epoxy classified by UL to ANSI/NSF 61 as a tank lining for potable water storage tanks. The high solids content ensures adequate protection of sharp edges, corners, and welds. B58VX605 Hardener contains Opti-Check OAP pigment technology for rapid holiday detection with safe blue light inspection lamps.

- Low VOC
- Low odor
- Outstanding application properties

PRODUCT CHARACTERISTICS

Finish:	Semi-Gloss	
Color:	Mill White and Light Blue	
Volume Solids:	72% ± 2%, mixed	
Weight Solids:	85% ± 2%, mixed	
VOC (EPA Method 24): mixed	Unreduced:	<250 g/L; 2.08 lb/gal
	Reduced 10%:	<300 g/L; 2.50 lb/gal
Mix Ratio:	1:1 by volume	

Recommended Spreading Rate per coat:

	Standard Min.	Standard Max.	AWWA Min.	AWWA Max.
Wet mils (microns)	**7.0** 175	**13.5** 340	**4.2** 105	**8.3** 208
Dry mils (microns)	**5.0** 125	**10*** 250*	**3.0** 75	**6.0*** 150*
~Coverage sq ft/gal (m^2/L)	**116** 2.8	**232** 5.6	**192** 4.7	**384** 9.4
Theoretical coverage **sq ft/gal** (m^2/L) @ 1 mil/25 micron dft	**1152** (28.2)			

NOTE: Brush or roll application may require multiple coats to achieve maximum film thickness and uniformity of appearance.

* See Recommended Systems on reverse side

Drying Schedule @ 7.0 mils wet (175 microns):

	@ 40°F/4.5°C	@ 77°F/25°C *50% RH*	@ 100°F/38°C
To touch:	4-5 hours	2 hours	1.5 hours
To handle:	48 hours	8 hours	4.5 hours
To recoat:			
minimum:	48 hours	8 hours	4.5 hours
maximum:	1 year	1 year	1 year
Cure for immersion:	14 days	7 days	4 days

If maximum recoat time is exceeded, abrade surface before recoating.
Drying time is temperature, humidity, and film thickness dependent.

Pot Life:	10 hours	4 hours	2 hours
Sweat-in-Time:	30 minutes	30 minutes	15 minutes

For **Potable Water Service**, allow a minimum cure time of 7 days at 77°F (25°C) prior to placing in service. Sterilize and rinse per AWWA C652.

Shelf Life:	36 months, unopened Store indoors at 40°F (4.5°C) to 100°F (38°C).
Flash Point:	91°F (33°C), TCC, mixed
Reducer/Clean Up:	Reducer R7K15

RECOMMENDED USES

Potable Water Tank Restrictions
Water Contact Temp: 23°C
Standard Cure; Tanks >= 1,500 gal: 2 cts
Standard Cure; Pipe >= 49.2"
Forced Cure; Tanks >= 100 gal: 2 cts
Forced Cure, Pipe >= 15"; 2 cts
Forced Cure; Maximum DFT: 6 mils/ct, 2 cts

- Conforms to AWWA D102 ICS #1, #2, and #5, and OCS #5***
- Meets or exceeds the performance requirements of SSPC Paint Spec 22

***Refer to respective systems

PERFORMANCE CHARACTERISTICS

Substrate*: Steel
Surface Preparation*: SSPC-SP10/NACE 2
System Tested*:
1 ct. Macropoxy 646 PW Fast Cure @ 6.0 mils (150 microns) dft
*unless otherwise noted below

Test Name	Test Method	Results
Abrasion Resistance	ASTM D4060, CS17 wheel, 1000 cycles, 1 kg load	84 mg loss
Adhesion	ASTM D4541	1,037 psi
Corrosion Weathering[1]	ASTM D5894, 36 cycles, 12,000 hours	Rating 10 per ASTM D714 for blistering; Rating 9 per ASTM D610 per rusting
Direct Impact Resistance	ASTM D2794	30 in. lb.
Dry Heat Resistance	ASTM D2485	250°F (121°C)
Flexibility	ASTM D522, 180° bend, 3/4" mandrel	Passes
Humidity Resistance	ASTM D4585, 6000 hours	No blistering, cracking, or rusting
Immersion[2]	5 year potable water	Rating 10 per ASTM D610 for Rusting; Rating 10 per ASTM D714 for Blistering
Immersion	18 months fresh and salt water	Passes, no rusting, blistering, or loss of adhesion
Pencil Hardness	ASTM D3363	3H
Water Vapor Permeance	ASTM D1653, Method B	1.16 grains/day

Epoxy coatings may darken or discolor following application and curing.

Footnotes:
[1] Zinc Clad II Plus Primer
[2] Galvapac/2 cts Macropoxy 646 PW

continued on back

Protective & Marine Coatings

Classified
Drinking Water System Component ANSI/NSF 61 3JGH
Water Quality

MACROPOXY® 646 PW
POTABLE WATER EPOXY

PART A	B58WX610	MILL WHITE
PART A	B58LX600	LIGHT BLUE
PART B	B58VX600	HARDENER
PART B	B58VX605	OAP HARDENER

PRODUCT INFORMATION

4.56

RECOMMENDED SYSTEMS

	Dry Film Thickness / ct. Mils	(Microns)
Immersion, Steel:		
***AWWA D102: Inside Coating System No. 1**		
minimum AWWA	8.0	(200)
1 ct. Macropoxy 646 PW	3.0	(75)
1 ct. Macropoxy 646 PW	5.0	(125)
***AWWA D102: Inside Coating System No. 2**		
minimum AWWA	12.0	(300)
1 ct. Macropoxy 646 PW	3.0	(75)
1 ct. Macropoxy 646 PW	4.0	(100)
1 ct. Macropoxy 646 PW	5.0	(125)
***AWWA D102: Inside Coating System No. 3**		
minimum AWWA	10.0	(250)
1 ct. Zinc Clad II LV or Plus	2.0	(50)
1 ct. Macropoxy 646 PW	3.0	(75)
1 ct. Macropoxy 646 PW	5.0	(125)
***AWWA D102: Inside Coating System No. 5**		
minimum AWWA	10.0	(250)
1 ct. Corothane I Galvapac	2.0	(50)
2 cts. Macropoxy 646 PW	4.0	(100)

Steel, forced cure (100 gallon minimum tank size or 15" or greater pipe diameter):

2 cts. Macropoxy 646 PW	5.0-6.0	(125-150)

•12 mils maximum film thickness •Curing requirements
- •Flash 2 hours @ 75°F (24°C)
- •24 hours @ 150°F (66°C)
- •24 hours @ 75°F (24°C)

Atmospheric, Steel:

***AWWA D102: Outside Coating System No. 5**		
minimum	6.0	(150)
1 ct. Macropoxy 646 PW	2.0	(50)
1 ct. Macropoxy 646 PW	2.0	(50)
1 ct. Acrolon 218HS	2.0	(50)
***AWWA D102: Outside Coating System No. 6**		
minimum	6.0	(150)
1 ct. Corothane I GalvaPac PW	2.0	(50)
1 ct. Macropoxy 646 PW	2.0	(50)
1 ct. Acrolon 218HS	2.0	(50)
Concrete/Masonry, smooth:		
2 cts.Macropoxy 646 PW	3.0-6.0	(75-150)

Refer to UL.com for maximum dft restrictions

The systems listed above are representative of the product's use, other systems may be appropriate.

DISCLAIMER

The information and recommendations set forth in this Product Data Sheet are based upon tests conducted by or on behalf of The Sherwin-Williams Company. Such information and recommendations set forth herein are subject to change and pertain to the product offered at the time of publication. Consult your Sherwin-Williams representative to obtain the most recent Product Data Information and Application Bulletin.

SURFACE PREPARATION

Surface must be clean, dry, and in sound condition. Remove all oil, dust, grease, dirt, loose rust, and other foreign material to ensure adequate adhesion.

Refer to product Application Bulletin for detailed surface preparation information.

Minimum recommended surface preparation:

Iron & Steel
- Atmospheric: SSPC-SP2/3
- Immersion: SSPC-SP10/NACE 2, 2-3 mil (50-75 micron) profile

Concrete & Masonry
- Immersion: SSPC-SP13/NACE 6-4.3.1 or 4.3.2, or ICRI No. 310.2, CSP 1-3

Surface Preparation Standards

	Condition of Surface	ISO 8501-1 BS7079:A1	Swedish Std. SIS055900	SSPC	NACE
White Metal		Sa 3	Sa 3	SP 5	1
Near White Metal		Sa 2.5	Sa 2.5	SP 10	2
Commercial Blast		Sa 2	Sa 2	SP 6	3
Brush-Off Blast		Sa 1	Sa 1	SP 7	4
Hand Tool Cleaning	Rusted	C St 2	C St 2	SP 2	-
	Pitted & Rusted	D St 2	D St 2	SP 2	-
Power Tool Cleaning	Rusted	C St 3	C St 3	SP 3	-
	Pitted & Rusted	D St 3	D St 3	SP 3	-

TINTING

Do not Tint.

APPLICATION CONDITIONS

Temperature: 40°F (4.5°C) minimum, 110°F (43°C) maximum (air, surface, and material) At least 5°F (2.8°C) above dew point

Relative humidity: 85% maximum

Refer to product Application Bulletin for detailed application information.

ORDERING INFORMATION

Packaging:
- Part A: 1 gallon (3.78L) and 5 gallon (18.9L) containers
- Part B: 1 gallon (3.78L) and 5 gallon (18.9L) containers

Weight: 12.7 ± 0.2 lb/gal ; 1.5 Kg/L mixed, may vary by color

SAFETY PRECAUTIONS

Refer to the MSDS sheet before use.

Published technical data and instructions are subject to change without notice. Contact your Sherwin-Williams representative for additional technical data and instructions.

WARRANTY

The Sherwin-Williams Company warrants our products to be free of manufacturing defects in accord with applicable Sherwin-Williams quality control procedures. Liability for products proven defective, if any, is limited to replacement of the defective product or the refund of the purchase price paid for the defective product as determined by Sherwin-Williams. NO OTHER WARRANTY OR GUARANTEE OF ANY KIND IS MADE BY SHERWIN-WILLIAMS, EXPRESSED OR IMPLIED, STATUTORY, BY OPERATION OF LAW OR OTHERWISE, INCLUDING MERCHANTABILITY AND FITNESS FOR A PARTICULAR PURPOSE.

Protective & Marine Coatings

Classified
Drinking Water System Component ANSI/NSF 61 3JGH
Water Quality

MACROPOXY® 646 PW
POTABLE WATER EPOXY

PART A	B58WX610	MILL WHITE
PART A	B58LX600	LIGHT BLUE
PART B	B58VX600	HARDENER
PART B	B58VX605	OAP HARDENER

Revised 5/11 **APPLICATION BULLETIN** 4.56

SURFACE PREPARATIONS

Surface must be clean, dry, and in sound condition. Remove all oil, dust, grease, dirt, loose rust, and other foreign material to ensure adequate adhesion.

Carbon Steel, Immersion Service:
Clean and degrease the surface prior to abrasive blasting per SSPC-SP 1 Solvent Cleaning. Methods described in SSPC-SP 1 include solvents, alkali, detergent/water, emulsions, and steam. The surface shall be abrasive blasted to SSPC-SP10/NACE No. 2 Near-White Blast Cleaning with a 2-3 mil (50-75 micron) profile. The anchor pattern shall be sharp with no evidence of a polished surface. The finished surface shall be free of all visible oil, grease, dust, dirt, mill scale, rust, coating, oxides, corrosion products, and other foreign matter with no more than 5% staining. After blasting, all dust and loose residue should be removed from the surface by acceptable means. Coat steel the same day as it is prepared and prior to the formation of rust.

Iron & Steel, Atmospheric Service:
Minimum surface preparation is Hand Tool Clean per SSPC-SP2. Remove all oil and grease from surface by Solvent Cleaning per SSPC-SP1. For better performance, use Commercial Blast Cleaning per SSPC-SP6/NACE 3, blast clean all surfaces using a sharp, angular abrasive for optimum surface profile (2 mils / 50 microns). Prime any bare steel within 8 hours or before flash rusting occurs.

Ductile Iron, Immersion Service:
Refer to National Association of Pipe Fabricators Surface Preparations Standard NAPF 500-03 as follows:

a. NAPF 500-03-01 "Solvent Cleaning"
b. NAPF 500-03-02 "Hand Tool Cleaning"
c. NAPF 500-03-03 "Power Tool Cleaning"
d. NAPF 500-03-04 "Abrasive Blast Cleaning of Ductile Iron Pipe".

Concrete and Masonry
For surface preparation, refer to SSPC-SP13/NACE 6, or ICRI No. 310.2, CSP 1-3. Surfaces should be thoroughly clean and dry. Concrete and mortar must be cured at least 28 days @ 75°F (24°C). Remove all loose mortar and foreign material. Surface must be free of laitance, concrete dust, dirt, form release agents, moisture curing membranes, loose cement and hardeners. Fill bug holes, air pockets and other voids with Steel-Seam FT910.

Follow the standard methods listed below when applicable:
ASTM D4258 Standard Practice for Cleaning Concrete.
ASTM D4259 Standard Practice for Abrading Concrete.
ASTM D4260 Standard Practice for Etching Concrete.
ASTM F1869 Standard Test Method for Measuring Moisture Vapor Emission Rate of Concrete.
SSPC-SP 13/Nace 6 Surface Preparation of Concrete.
ICRI No. 310.2 Concrete Surface Preparation.

Concrete, Immersion Service:
For surface preparation, refer to SSPC-SP13/NACE 6, Section 4.3.1 or 1.3.2 or ICRI No. 310.2, CSP 1-3.

Previously Painted Surfaces:
If in sound condition, clean the surface of all foreign material. Scarify the surface to create the desired surface profile. Apply coatings on a test area, allowing paint to dry one week before testing adhesion. If adhesion is poor, or if this product attacks the previous finish, removal of the previous coating may be necessary.

Surface Preparation Standards

	Condition of Surface	ISO 8501-1 BS7079:A1	Swedish Std. SIS055900	SSPC	NACE
White Metal		Sa 3	Sa 3	SP 5	1
Near White Metal		Sa 2.5	Sa 2.5	SP 10	2
Commercial Blast		Sa 2	Sa 2	SP 6	3
Brush-Off Blast		Sa 1	Sa 1	SP 7	4
Hand Tool Cleaning	Rusted	C St 2	C St 2	SP 2	-
	Pitted & Rusted	D St 2	D St 2	SP 2	-
Power Tool Cleaning	Rusted	C St 3	C St 3	SP 3	-
	Pitted & Rusted	D St 3	D St 3	SP 3	-

APPLICATION CONDITIONS

Temperature: 40°F (4.5°C) minimum, 110°F (43°C) maximum
(air, surface, and material)
At least 5°F (2.8°C) above dew point

Relative humidity: 85% maximum

APPLICATION EQUIPMENT

The following is a guide. Changes in pressures and tip sizes may be needed for proper spray characteristics. Always purge spray equipment before use with listed reducer. Any reduction must be compliant with existing VOC regulations and compatible with the existing environmental and application conditions.

Reducer/Clean Up ..... Reducer R7K15

Airless Spray
Pump.....30:1
Pressure.....2800 - 3000 psi
Hose.....1/4" ID
Tip .....017" - .023"
Filter .....60 mesh
Reduction.....As needed up to 10% by volume

Brush
Brush.....Nylon/Polyester or Natural Bristle
Reduction.....As needed up to 10% by volume

Roller
Cover .....3/8" woven with solvent resistant core
Reduction.....As needed up to 10% by volume

Recommended Spreading Rate per coat:

	Standard	AWWA
Wet mils (microns):	7.0 (175) - 13.5 (340)	4.2 (105) - 8.3 (208)
Dry mils (microns):	5.0 (125) - 10.0* (250)	3.0 (75) - 6.0* (150)
Coverage:	116 (2.8) - 232 (5.6) sq ft/gal (m^2/L)	192 (4.7) - 384 (9.4)

*See recommended systems on Product Information page

If specific application equipment is not listed above, equivalent equipment may be substituted.

continued on back

Protective & Marine Coatings

Classified
Drinking Water System Component ANSI/NSF 61 3JGH
Water Quality

MACROPOXY® 646 PW
POTABLE WATER EPOXY

PART A	B58WX610	MILL WHITE
PART A	B58LX600	LIGHT BLUE
PART B	B58VX600	HARDENER
PART B	B58VX605	OAP HARDENER

APPLICATION BULLETIN

4.56

APPLICATION PROCEDURES

Surface preparation must be completed as indicated.

Mix contents of each component thoroughly with low speed power agitation. Make certain no pigment remains on the bottom of the can. Then combine one part by volume of Part A with one part by volume of Part B. Thoroughly agitate the mixture with power agitation. Allow the material to sweat-in as indicated prior to application. Re-stir before using.

If reducer solvent is used, add only after both components have been thoroughly mixed, after sweat-in.

Apply paint at the recommended film thickness and spreading rate as indicated below:

Recommended Spreading Rate per coat:

	Standard		AWWA	
	Min.	**Max.**	**Min.**	**Max.**
Wet mils (microns)	**7.0** 175	**13.5** 340	**4.2** 105	**8.3** 208
Dry mils (microns)	**5.0** 125	**10*** 250*	**3.0** 75	**6.0*** 150*
~Coverage sq ft/gal (m^2/L)	**116** 2.8	**232** 5.6	**192** 4.7	**384** 9.4
Theoretical coverage **sq ft/gal** (m^2/L) @ 1 mil/25 micron dft	**1152** (28.2)			

NOTE: Brush or roll application may require multiple coats to achieve maximum film thickness and uniformity of appearance.

* See Recommended Systems on reverse side

Drying Schedule @ 7.0 mils wet (175 microns):

	@ 40°F/4.5°C	@ 77°F/25°C *50% RH*	@ 100°F/38°C
To touch:	4-5 hours	2 hours	1.5 hours
To handle:	48 hours	8 hours	4.5 hours
To recoat:			
minimum:	48 hours	8 hours	4.5 hours
maximum:	1 year	1 year	1 year
Cure for immersion:	14 days	7 days	4 days

If maximum recoat time is exceeded, abrade surface before recoating.

Drying time is temperature, humidity, and film thickness dependent.

Pot Life:	10 hours	4 hours	2 hours
Sweat-in-Time:	30 minutes	30 minutes	15 minutes

For **Potable Water Service**, allow a minimum cure time of 7 days at 77°F (25°C) prior to placing in service. Sterilize and rinse per AWWA C652.

Application of coating above maximum or below minimum recommended spreading rate may adversely affect coating performance.

CLEAN UP INSTRUCTIONS

Clean spills and spatters immediately with Reducer R7K15. Clean tools immediately after use with Reducer R7K15.

DISCLAIMER

The information and recommendations set forth in this Product Data Sheet are based upon tests conducted by or on behalf of The Sherwin-Williams Company. Such information and recommendations set forth herein are subject to change and pertain to the product offered at the time of publication. Consult your Sherwin-Williams representative to obtain the most recent Product Data Information and Application Bulletin.

PERFORMANCE TIPS

Stripe coat all crevices, welds, and sharp angles to prevent early failure in these areas.

When using spray application, use a 50% overlap with each pass of the gun to avoid holidays, bare areas, and pinholes. If necessary, cross spray at a right angle

Spreading rates are calculated on volume solids and do not include an application loss factor due to surface profile, roughness or porosity of the surface, skill and technique of the applicator, method of application, various surface irregularities, material lost during mixing, spillage, over thinning, climatic conditions, and excessive film build.

Excessive reduction of material can affect film build, appearance, adhesion and UL ANSI/ NSF 61 approval.

Do not mix previously catalyzed material with new.

Do not apply the material beyond recommended pot life.

In order to avoid blockage of spray equipment, clean equipment before use or before periods of extended downtime with Reducer R7K15.

Tinting is not recommended for immersion service.

Quik-Kick Epoxy Accelerator is acceptable for atmospheric use.

Do not use Quik-Kick Epoxy Accelerator for immersion ser-vice when UL certification is required.

Insufficient ventilation, incomplete mixing, miscatalyzation, and external heaters may cause premature yellowing.

Excessive film build, poor ventilation, and cool temperatures may cause solvent entrapment and premature coating failure.

For Immersion Service: (if required) Holiday test in accordance with ASTM D5162 for steel, or ASTM D4787 for concrete.

Guidance on techniques and required equipment to inspect a coating system incorporating Opti-Check OAP Technology can be found in SSPC-TU 11.

Refer to Product Information sheet for additional performance characteristics and properties.

SAFETY PRECAUTIONS

Refer to the MSDS sheet before use.

Published technical data and instructions are subject to change without notice. Contact your Sherwin-Williams representative for additional technical data and instructions.

WARRANTY

The Sherwin-Williams Company warrants our products to be free of manufacturing defects in accord with applicable Sherwin-Williams quality control procedures. Liability for products proven defective, if any, is limited to replacement of the defective product or the refund of the purchase price paid for the defective product as determined by Sherwin-Williams. NO OTHER WARRANTY OR GUARANTEE OF ANY KIND IS MADE BY SHERWIN-WILLIAMS, EXPRESSED OR IMPLIED, STATUTORY, BY OPERATION OF LAW OR OTHERWISE, INCLUDING MERCHANTABILITY AND FITNESS FOR A PARTICULAR PURPOSE.

MATERIAL SAFETY DATA SHEET

B58WX610
06 00

DATE OF PREPARATION
May 8, 2011

SECTION 1 — PRODUCT AND COMPANY IDENTIFICATION

PRODUCT NUMBER
B58WX610
PRODUCT NAME
MACROPOXY® 646 PW Potable Water Epoxy (Part A), Mill White
MANUFACTURER'S NAME
THE SHERWIN-WILLIAMS COMPANY
101 Prospect Avenue N.W.
Cleveland, OH 44115

Telephone Numbers and Websites

Product Information	www.sherwin-williams.com
Regulatory Information	(216) 566-2902 www.paintdocs.com
Medical Emergency	(216) 566-2917
Transportation Emergency*	(800) 424-9300
**for Chemical Emergency ONLY (spill, leak, fire, exposure, or accident)*	

SECTION 2 — COMPOSITION/INFORMATION ON INGREDIENTS

% by Weight	CAS Number	Ingredient	Units	Vapor Pressure
3	**100-41-4**	**Ethylbenzene**		
		ACGIH TLV	100 PPM	7.1 mm
		ACGIH TLV	125 PPM STEL	
		OSHA PEL	100 PPM	
		OSHA PEL	125 PPM STEL	
14	**1330-20-7**	**Xylene**		
		ACGIH TLV	100 PPM	5.9 mm
		ACGIH TLV	150 PPM STEL	
		OSHA PEL	100 PPM	
		OSHA PEL	150 PPM STEL	
10	**68410-23-1**	**Polyamide**		
		ACGIH TLV	Not Available	
		OSHA PEL	Not Available	
8	**14807-96-6**	**Talc**		
		ACGIH TLV	2 mg/m3 as Resp. Dust	
		OSHA PEL	2 mg/m3 as Resp. Dust	
35	**13463-67-7**	**Titanium Dioxide**		
		ACGIH TLV	10 mg/m3 as Dust	
		OSHA PEL	10 mg/m3 Total Dust	
		OSHA PEL	5 mg/m3 Respirable Fraction	

SECTION 3 — HAZARDS IDENTIFICATION

HMIS Codes

Health	3*
Flammability	3
Reactivity	0

ROUTES OF EXPOSURE
INHALATION of vapor or spray mist.
EYE or SKIN contact with the product, vapor or spray mist.
EFFECTS OF OVEREXPOSURE
EYES: Irritation.
SKIN: Prolonged or repeated exposure may cause irritation.
INHALATION: Irritation of the upper respiratory system.

May cause nervous system depression. Extreme overexposure may result in unconsciousness and possibly death.
Prolonged overexposure to hazardous ingredients in Section 2 may cause adverse chronic effects to the following organs or systems:
- the liver
- the urinary system
- the reproductive system

SIGNS AND SYMPTOMS OF OVEREXPOSURE

Headache, dizziness, nausea, and loss of coordination are indications of excessive exposure to vapors or spray mists.
Redness and itching or burning sensation may indicate eye or excessive skin exposure.

MEDICAL CONDITIONS AGGRAVATED BY EXPOSURE

May cause allergic skin reaction in susceptible persons or skin sensitization.

CANCER INFORMATION

For complete discussion of toxicology data refer to Section 11.

SECTION 4 — FIRST AID MEASURES

EYES: Flush eyes with large amounts of water for 15 minutes. Get medical attention.
SKIN: Wash affected area thoroughly with soap and water.
Remove contaminated clothing and launder before re-use.
INHALATION: If affected, remove from exposure. Restore breathing. Keep warm and quiet.
INGESTION: Do not induce vomiting. Get medical attention immediately.

SECTION 5 — FIRE FIGHTING MEASURES

FLASH POINT	LEL	UEL	FLAMMABILITY CLASSIFICATION
85 °F PMCC	1.0	7.0	RED LABEL -- Flammable, Flash below 100 °F (38 °C)

EXTINGUISHING MEDIA

Carbon Dioxide, Dry Chemical, Foam

UNUSUAL FIRE AND EXPLOSION HAZARDS

Closed containers may explode when exposed to extreme heat.
Application to hot surfaces requires special precautions.
During emergency conditions overexposure to decomposition products may cause a health hazard. Symptoms may not be immediately apparent. Obtain medical attention.

SPECIAL FIRE FIGHTING PROCEDURES

Full protective equipment including self-contained breathing apparatus should be used.
Water spray may be ineffective. If water is used, fog nozzles are preferable. Water may be used to cool closed containers to prevent pressure build-up and possible autoignition or explosion when exposed to extreme heat.

SECTION 6 — ACCIDENTAL RELEASE MEASURES

STEPS TO BE TAKEN IN CASE MATERIAL IS RELEASED OR SPILLED

Remove all sources of ignition. Ventilate the area.
Remove with inert absorbent.

SECTION 7 — HANDLING AND STORAGE

STORAGE CATEGORY

DOL Storage Class IC

PRECAUTIONS TO BE TAKEN IN HANDLING AND STORAGE

Contents are FLAMMABLE. Keep away from heat, sparks, and open flame.
During use and until all vapors are gone: Keep area ventilated - Do not smoke - Extinguish all flames, pilot lights, and heaters - Turn off stoves, electric tools and appliances, and any other sources of ignition.
Consult NFPA Code. Use approved Bonding and Grounding procedures.
Keep container closed when not in use. Transfer only to approved containers with complete and appropriate labeling. Do not take internally. Keep out of the reach of children.

SECTION 8 — EXPOSURE CONTROLS/PERSONAL PROTECTION

PRECAUTIONS TO BE TAKEN IN USE

Use only with adequate ventilation.
Avoid contact with skin and eyes. Avoid breathing vapor and spray mist.
Wash hands after using.
This coating may contain materials classified as nuisance particulates (listed "as Dust" in Section 2) which may be present at hazardous levels only during sanding or abrading of the dried film. If no specific dusts are listed in Section 2, the applicable limits for nuisance dusts are ACGIH TLV 10 mg/m3 (total dust), 3 mg/m3 (respirable fraction), OSHA PEL 15 mg/m3 (total dust), 5 mg/m3 (respirable fraction).

VENTILATION

Local exhaust preferable. General exhaust acceptable if the exposure to materials in Section 2 is maintained below applicable exposure limits. Refer to OSHA Standards 1910.94, 1910.107, 1910.108.

RESPIRATORY PROTECTION

If personal exposure cannot be controlled below applicable limits by ventilation, wear a properly fitted organic vapor/particulate respirator approved by NIOSH/MSHA for protection against materials in Section 2.
When sanding or abrading the dried film, wear a dust/mist respirator approved by NIOSH/MSHA for dust which may be generated from this product, underlying paint, or the abrasive.

PROTECTIVE GLOVES

Wear gloves which are recommended by glove supplier for protection against materials in Section 2.

EYE PROTECTION

Wear safety spectacles with unperforated sideshields.

OTHER PRECAUTIONS

This product must be mixed with other components before use. Before opening the packages, READ AND FOLLOW WARNING LABELS ON ALL COMPONENTS.

Intentional misuse by deliberately concentrating and inhaling the contents can be harmful or fatal.

SECTION 9 — PHYSICAL AND CHEMICAL PROPERTIES

PRODUCT WEIGHT	12.41 lb/gal	1487 g/l
SPECIFIC GRAVITY	1.49	
BOILING POINT	277 - 292 °F	136 - 144 °C
MELTING POINT	Not Available	
VOLATILE VOLUME	29%	
EVAPORATION RATE	Slower than ether	
VAPOR DENSITY	Heavier than air	
SOLUBILITY IN WATER	N.A.	

VOLATILE ORGANIC COMPOUNDS (VOC Theoretical - As Packaged)

2.09 lb/gal	251 g/l	Less Water and Federally Exempt Solvents
2.09 lb/gal	251 g/l	Emitted VOC

SECTION 10 — STABILITY AND REACTIVITY

STABILITY — Stable

CONDITIONS TO AVOID

None known.

INCOMPATIBILITY

None known.

HAZARDOUS DECOMPOSITION PRODUCTS

By fire: Carbon Dioxide, Carbon Monoxide

HAZARDOUS POLYMERIZATION

Will not occur

SECTION 11 — TOXICOLOGICAL INFORMATION

CHRONIC HEALTH HAZARDS

Reports have associated repeated and prolonged overexposure to solvents with permanent brain and nervous system damage.

Ethylbenzene is classified by IARC as possibly carcinogenic to humans (2B) based on inadequate evidence in humans and sufficient evidence in laboratory animals. Lifetime inhalation exposure of rats and mice to high ethylbenzene concentrations resulted in increases in certain types of cancer, including kidney tumors in rats and lung and liver tumors in mice. These effects were not observed in animals exposed to lower concentrations. There is no evidence that ethylbenzene causes cancer in humans.

IARC's Monograph No. 93 reports there is sufficient evidence of carcinogenicity in experimental rats exposed to titanium dioxide but inadequate evidence for carcinogenicity in humans and has assigned a Group 2B rating. In addition, the IARC summary concludes, "No significant exposure to titanium dioxide is thought to occur during the use of products in which titanium is bound to other materials, such as paint."

TOXICOLOGY DATA

CAS No.	Ingredient Name				
100-41-4	**Ethylbenzene**				
		LC50	RAT	4HR	Not Available
		LD50	RAT		3500 mg/kg
1330-20-7	**Xylene**				
		LC50	RAT	4HR	5000 ppm
		LD50	RAT		4300 mg/kg
68410-23-1	**Polyamide**				
		LC50	RAT	4HR	Not Available
		LD50	RAT		8000. mg/kg
14807-96-6	**Talc**				
		LC50	RAT	4HR	Not Available
		LD50	RAT		Not Available
13463-67-7	**Titanium Dioxide**				
		LC50	RAT	4HR	Not Available
		LD50	RAT		Not Available

SECTION 12 — ECOLOGICAL INFORMATION

ECOTOXICOLOGICAL INFORMATION

No data available.

SECTION 13 — DISPOSAL CONSIDERATIONS

WASTE DISPOSAL METHOD

Waste from this product may be hazardous as defined under the Resource Conservation and Recovery Act (RCRA) 40 CFR 261.
Waste must be tested for ignitability to determine the applicable EPA hazardous waste numbers.
Incinerate in approved facility. Do not incinerate closed container. Dispose of in accordance with Federal, State/Provincial, and Local regulations regarding pollution.

SECTION 14 — TRANSPORT INFORMATION

Multi-modal shipping descriptions are provided for informational purposes and do not consider container sizes. The presence of a shipping description for a particular mode of transport (ocean, air, etc.), does not indicate that the product is packaged suitably for that mode of transport. All packaging must be reviewed for suitability prior to shipment, and compliance with the applicable regulations is the sole responsibility of the person offering the product for transport.

US Ground (DOT)

5 Liters (1.3 Gallons) and Less may be Classed as CONSUMER COMMODITY, ORM-D
Larger Containers are Regulated as:
UN1263, PAINT, 3, PG III, (ERG#128)

DOT (Dept of Transportation) Hazardous Substances & Reportable Quantities

Ethyl benzene 1000 lb RQ
Xylenes (isomers and mixture) 100 lb RQ

Bulk Containers may be Shipped as (check reportable quantities):

RQ, UN1263, PAINT, 3, PG III, (XYLENES (ISOMERS AND MIXTURE)),
(ERG#128)

Canada (TDG)

UN1263, PAINT, CLASS 3, PG III, LIMITED QUANTITY, (ERG#128)

IMO

5 Liters (1.3 Gallons) and Less may be Shipped as Limited Quantity.
UN1263, PAINT, CLASS 3, PG III, (29 C c.c.), EmS F-E, S-E, ADR (D/E)

IATA/ICAO

UN1263, PAINT, 3, PG III

SECTION 15 — REGULATORY INFORMATION

SARA 313 *(40 CFR 372.65C)* SUPPLIER NOTIFICATION

CAS No.	CHEMICAL/COMPOUND	% by WT	% Element
100-41-4	Ethylbenzene	3	
1330-20-7	Xylene	14	

CALIFORNIA PROPOSITION 65

WARNING: This product contains chemicals known to the State of California to cause cancer and birth defects or other reproductive harm.

TSCA CERTIFICATION

All chemicals in this product are listed, or are exempt from listing, on the TSCA Inventory.

SECTION 16 — OTHER INFORMATION

This product has been classified in accordance with the hazard criteria of the Canadian Controlled Products Regulations (CPR) and the MSDS contains all of the information required by the CPR.

The above information pertains to this product as currently formulated, and is based on the information available at this time. Addition of reducers or other additives to this product may substantially alter the composition and hazards of the product. Since conditions of use are outside our control, we make no warranties, express or implied, and assume no liability in connection with any use of this information.

Protective & Marine Coatings RECOATABLE EPOXY PRIMER

PART G	B67A5	LIGHT GRAY
PART G	B67H5	TAN
PART G	B67R5	RED OXIDE
PART H	B67V5	HARDENER

Revised 5/11

PRODUCT INFORMATION

4.45

PRODUCT DESCRIPTION

RECOATABLE EPOXY PRIMER is a rust inhibitive high build catalyzed polyamide/bisphenol A epoxy primer designed for fast dry and quick or extended recoatability.

- Meets Class A requirements for Slip Coefficient, .50 (Red Oxide only)
- Long pot life
- High build coating for economical application
- One year recoatability
- Low temperature application - down to 35°F (1.5°C)
- Corrosion resistant (contains zinc phosphate)
- Outstanding application properties

PRODUCT CHARACTERISTICS

Finish: Flat

Color: Red Oxide, Tan, Light Gray

Volume Solids: 65% ± 2%, mixed

Weight Solids: 81% ± 2%, mixed

VOC (EPA Method 24): mixed
Unreduced: <320 g/L; 2.67 lb/gal
Reduced 5%: <340 g/L; 2.88 lb/gal

Mix Ratio: 1:1 by volume

Recommended Spreading Rate per coat:

	Minimum	Maximum
Wet mils (microns)	**6.0** (150)	**9.0** (225)
Dry mils (microns)	**4.0*** (100)	**6.0*** (150)
~Coverage sq ft/gal (m^2/L)	**175** (4.3)	**260** (6.4)
Theoretical coverage **sq ft/gal** (m^2/L) @ 1 mil / 25 microns dft	**1040** (25.5)	

*See Performance Tips section

NOTE: Brush or roll application may require multiple coats to achieve maximum film thickness and uniformity of appearance.

Drying Schedule @ 6.0 mils wet (150 microns):

	@ 35°F/1.5°C	@ 77°F/25°C 50% RH	@ 120°F/49°C
To touch:	1 hour	15 minutes	10 minutes
Tack free:	2 hours	30 minutes	15 minutes
To recoat:			
minimum:	6 hours	2 hours	30 minutes
maximum:	1 year	1 year	1 year
To cure:	14 days	14 days	2 days

If maximum recoat time is exceeded, abrade surface before recoating.
Drying time is temperature, humidity, and film thickness dependent.

Pot Life:	8+ hours	8 hours	3 hours
Sweat-in-time:	1 hour	30 minutes	10 minutes

Shelf Life: 36 months, unopened
Store indoors at 40°F (4.5°C) to 100°F (38°C).

Flash Point: 80°F (27°C), PMCC, mixed

Reducer/Clean Up:
Below 80°F (27°C): Reducer #54, R7K54
Above 80°F (27°C): Reducer #100, R7K100 or R7K104
In California: Reducer R7K111

RECOMMENDED USES

For use as a shop or field applied epoxy primer where a variable recoat window is required due to construction schedules, distribution logistics and environmental considerations. Affords flexibility in projects when completion schedules cannot be specified.

- Primer for structural steel
- Paper mills
- Power plants
- Suitable for use in USDA inspected facilities
- Marine applications
- Storage tanks

PERFORMANCE CHARACTERISTICS

Substrate*: Steel
Surface Preparation*: SSPC-SP6/NACE 3
System Tested*:
1 ct. Recoatable Epoxy Primer @ 5.0 mils (125 microns) dft
*unless otherwise noted below

Test Name	Test Method	Results
Abrasion Resistance	ASTM D4060, CS17 wheel, 1000 cycles, 1 kg load	200 mg loss
Accelerated Weathering - QUV[1]	ASTM D4587, QUV-A, 5,000 hours	Passes
Adhesion	ASTM D4541	1050 psi
Corrosion Weathering	ASTM D5894, 13 cycles, 4,368 hours	Rating 10 per ASTM D714 for Blistering; Rating 7 per ASTM D610 for Rusting
Direct Impact Resistance	ASTM D2794	160 in. lbs.
Dry Heat Resistance	ASTM D2485	250°F (121°C) (discolors)
Flexibility	ASTM D522, 180° bend, 1" mandrel	Passes
Moisture Condensation Resistance	ASTM D4585, 100°F (38°C), 2000 hours	Passes, no cracking or delamination
Pencil Hardness	ASTM D3363	3H
Salt Fog Resistance[1]	ASTM B117, 5,600 hours	Passes, no cracking or delamination
Slip Coefficient, Red Oxide	AISC Specification for Structural Joints Using ASTM A325 or ASTM A490 Bolts	Class A, 0.50

Epoxy coatings may darken or yellow following application and curing.

Provides performance comparable to products formulated to federal specifications: Mil-P-23377, Mil-P-53022

Footnotes:
[1] *Acrolon 218 HS topcoat*

continued on back

Protective & Marine Coatings RECOATABLE EPOXY PRIMER

PART G	B67A5	LIGHT GRAY
PART G	B67H5	TAN
PART G	B67R5	RED OXIDE
PART H	B67V5	HARDENER

PRODUCT INFORMATION

4.45

RECOMMENDED SYSTEMS

		Dry Film Thickness / ct. Mils	(Microns)
Steel, catalyzed epoxy topcoat:			
1 ct.	Recoatable Epoxy Primer	4.0-6.0	(100-150)
2 cts.	Tile-Clad HS Epoxy	2.5-4.0	(63-100)
Steel, polyurethane topcoat:			
1 ct.	Recoatable Epoxy Primer	4.0-6.0	(100-150)
1-2 cts.	Hi-Solids Polyurethane	3.0-4.0	(75-100)
Steel, acrylic epoxy topcoat:			
1 ct.	Recoatable Epoxy Primer	4.0-6.0	(100-150)
2 cts.	Water Based Catalyzed Epoxy	2.5-3.0	(63-75)
Steel, acrylic topcoat:			
1 ct.	Recoatable Epoxy Primer	4.0-6.0	(100-150)
2 cts.	DTM Acrylic Coating	2.5-4.0	(63-100)
Galvanized:			
1 ct.	Recoatable Epoxy Primer	4.0-6.0	(100-150)
2 cts.	Tile-Clad HS Epoxy	2.5-4.0	(63-100)

The systems listed above are representative of the product's use, other systems may be appropriate.

DISCLAIMER

The information and recommendations set forth in this Product Data Sheet are based upon tests conducted by or on behalf of The Sherwin-Williams Company. Such information and recommendations set forth herein are subject to change and pertain to the product offered at the time of publication. Consult your Sherwin-Williams representative to obtain the most recent Product Data Information and Application Bulletin.

SURFACE PREPARATION

Surface must be clean, dry, and in sound condition. Remove all oil, dust, grease, dirt, loose rust, and other foreign material to ensure adequate adhesion.

Refer to product Application Bulletin for detailed surface preparation information.

Minimum recommended surface preparation:

Iron & Steel: SSPC-SP6/NACE 3, 2 mil (50 micron) profile

Galvanizing: SSPC-SP1

Surface Preparation Standards

	Condition of Surface	ISO 8501-1 BS7079:A1	Swedish Std. SIS055900	SSPC	NACE
White Metal		Sa 3	Sa 3	SP 5	1
Near White Metal		Sa 2.5	Sa 2.5	SP 10	2
Commercial Blast		Sa 2	Sa 2	SP 6	3
Brush-Off Blast		Sa 1	Sa 1	SP 7	4
Hand Tool Cleaning	Rusted	C St 2	C St 2	SP 2	-
	Pitted & Rusted	D St 2	D St 2	SP 2	-
Power Tool Cleaning	Rusted	C St 3	C St 3	SP 3	-
	Pitted & Rusted	D St 3	D St 3	SP 3	-

TINTING

Do not tint.

APPLICATION CONDITIONS

Temperature:

air and surface: 35°F (1.6°C) minimum, 140°F (60°C) maximum

material: 50°F (10°C) minimum
At least 5°F (2.8°C) above dew point

Relative humidity: 85% maximum

Refer to product Application Bulletin for detailed application information.

ORDERING INFORMATION

Packaging:

Part G: 1 gallon (3.78L) and 5 gallon (18.9L) containers

Part H: 1 gallon (3.78L) and 5 gallon (18.9L) containers

Weight: 13.26 ± 0.2 lb/gal ; 1.6 Kg/L, mixed

SAFETY PRECAUTIONS

Refer to the MSDS sheet before use.

Published technical data and instructions are subject to change without notice. Contact your Sherwin-Williams representative for additional technical data and instructions.

WARRANTY

The Sherwin-Williams Company warrants our products to be free of manufacturing defects in accord with applicable Sherwin-Williams quality control procedures. Liability for products proven defective, if any, is limited to replacement of the defective product or the refund of the purchase price paid for the defective product as determined by Sherwin-Williams. NO OTHER WARRANTY OR GUARANTEE OF ANY KIND IS MADE BY SHERWIN-WILLIAMS, EXPRESSED OR IMPLIED, STATUTORY, BY OPERATION OF LAW OR OTHERWISE, INCLUDING MERCHANTABILITY AND FITNESS FOR A PARTICULAR PURPOSE.

Protective & Marine Coatings RECOATABLE EPOXY PRIMER

PART G	B67A5	LIGHT GRAY
PART G	B67H5	TAN
PART G	B67R5	RED OXIDE
PART H	B67V5	HARDENER

Revised 5/11

APPLICATION BULLETIN

4.45

SURFACE PREPARATIONS

Surface must be clean, dry, and in sound condition. Remove all oil, dust, grease, dirt, loose rust, and other foreign material to ensure adequate adhesion.

Iron & Steel (atmospheric service)
Remove all oil and grease from surface by Solvent Cleaning per SSPC-SP1. Minimum surface preparation is Commercial Blast Cleaning per SSPC-SP6/NACE 3. For better performance, use Near White Metal Blast Cleaning per SSPC-SP10/NACE 2. Blast clean all surfaces using a sharp, angular abrasive for optimum surface profile (2 mils / 50 microns). Prime any bare steel the same day as it is cleaned.

Galvanized Steel
Allow to weather a minimum of six months prior to coating. Solvent Clean per SSPC-SP1. When weathering is not possible, or the surface has been treated with chromates or silicates, first Solvent Clean per SSPC-SP1 and apply a test patch. Allow paint to dry at least one week before testing adhesion. If adhesion is poor, brush blasting per SSPC-SP7 is necessary to remove these treatments. Rusty galvanizing requires a minimum of Hand Tool Cleaning per SSPC-SP2, prime the area the same day as cleaned.

Previously Painted Surfaces
If in sound condition, clean the surface of all foreign material. Smooth, hard or glossy coatings and surfaces should be dulled by abrading the surface. Apply a test area, allowing paint to dry one week before testing adhesion. If adhesion is poor, or if this product attacks the previous finish, removal of the previous coating may be necessary. If paint is peeling or badly weathered, clean surface to sound substrate and treat as a new surface as above.

Surface Preparation Standards

	Condition of Surface	ISO 8501-1 BS7079:A1	Swedish Std. SIS055900	SSPC	NACE
White Metal		Sa 3	Sa 3	SP 5	1
Near White Metal		Sa 2.5	Sa 2.5	SP 10	2
Commercial Blast		Sa 2	Sa 2	SP 6	3
Brush-Off Blast		Sa 1	Sa 1	SP 7	4
Hand Tool Cleaning	Rusted	C St 2	C St 2	SP 2	-
	Pitted & Rusted	D St 2	D St 2	SP 2	-
Power Tool Cleaning	Rusted	C St 3	C St 3	SP 3	-
	Pitted & Rusted	D St 3	D St 3	SP 3	-

APPLICATION CONDITIONS

Temperature:
air and surface: 35°F (1.6°C) minimum, 140°F (60°C) maximum
material: 50°F (10°C) minimum
At least 5°F (2.8°C) above dew point

Relative humidity: 85% maximum

APPLICATION EQUIPMENT

The following is a guide. Changes in pressures and tip sizes may be needed for proper spray characteristics. Always purge spray equipment before use with listed reducer. Any reduction must be compliant with existing VOC regulations and compatible with the existing environmental and application conditions.

Reducer/Clean Up
Below 80°F (27°C) .....Reducer #54, R7K54
Above 80°F (27°C).....Reducer #100, R7K100 or R7K104
In California.....Reducer R7K111

Airless Spray
Pressure.....2400 psi
Hose.....1/4" ID
Tip .....017"
Filter.....60 mesh
Reduction.....As needed up to 5% by volume

Brush
Brush.....Natural Bristle
Reduction.....Not recommended

Roller
Cover .....3/8" - 1/2" woven with solvent resistant core
Reduction.....Not recommended

Plural Component Spray...Acceptable
Refer to April 2010 Technical Bulletin - "Application Guidelines for Macropoxy 646 & Recoatable Epoxy Primer Utilizing Plural Component Equipment"

If specific application equipment is not listed above, equivalent equipment may be substituted.

continued on back

Protective & Marine Coatings RECOATABLE EPOXY PRIMER

PART G	B67A5	LIGHT GRAY
PART G	B67H5	TAN
PART G	B67R5	RED OXIDE
PART H	B67V5	HARDENER

APPLICATION BULLETIN

4.45

APPLICATION PROCEDURES

Surface preparation must be completed as indicated.

Mix contents of each component thoroughly with low speed power agitation. Make certain no pigment remains on the bottom of the cans. Then combine one part by volume of Part G with one part by volume of Part H. Thoroughly agitate the mixture with power agitation. Allow the material to sweat-in as indicated. Re-stir before using.

If reducer solvent is used, add only after both components have been thoroughly mixed, after sweat-in.

Apply paint at the recommended film thickness and spreading rate as indicated below:

Recommended Spreading Rate per coat:

	Minimum	Maximum
Wet mils (microns)	**6.0** (150)	**9.0** (225)
Dry mils (microns)	**4.0*** (100)	**6.0*** (150)
~Coverage sq ft/gal (m^2/L)	**175** (4.3)	**260** (6.4)
Theoretical coverage **sq ft/gal** (m^2/L) @ 1 mil / 25 microns dft	**1040** (25.5)	

*See Performance Tips section

NOTE: Brush or roll application may require multiple coats to achieve maximum film thickness and uniformity of appearance.

Drying Schedule @ 6.0 mils wet (150 microns):

	@ 35°F/1.5°C	@ 77°F/25°C *50% RH*	@ 120°F/49°C
To touch:	1 hour	15 minutes	10 minutes
Tack free:	2 hours	30 minutes	15 minutes
To recoat:			
minimum:	6 hours	2 hours	30 minutes
maximum:	1 year	1 year	1 year
To cure:	14 days	14 days	2 days
If maximum recoat time is exceeded, abrade surface before recoating.			
Drying time is temperature, humidity, and film thickness dependent.			
Pot Life:	8+ hours	8 hours	3 hours
Sweat-in-time:	1 hour	30 minutes	10 minutes

Application of coating above maximum or below minimum recommended spreading rate may adversely affect coating performance.

CLEAN UP INSTRUCTIONS

Clean spills and spatters immediately with Reducer #54, R7K54. Clean tools immediately after use with Reducer #54, R7K54. Follow manufacturer's safety recommendations when using any solvent.

DISCLAIMER

The information and recommendations set forth in this Product Data Sheet are based upon tests conducted by or on behalf of The Sherwin-Williams Company. Such information and recommendations set forth herein are subject to change and pertain to the product offered at the time of publication. Consult your Sherwin-Williams representative to obtain the most recent Product Data Information and Application Bulletin.

PERFORMANCE TIPS

Stripe coat all crevices, welds, and sharp angles to prevent early failure in these areas.

When using spray application, use a 50% overlap with each pass of the gun to avoid holidays, bare areas, and pinholes. If necessary, cross spray at a right angle.

Spreading rates are calculated on volume solids and do not include an application loss factor due to surface profile, roughness or porosity of the surface, skill and technique of the applicator, method of application, various surface irregularities, material lost during mixing, spillage, overthinning, climatic conditions, and excessive film build.

Excessive reduction of material can affect film build, appearance, and adhesion.

Do not apply the material beyond recommended pot life.

Do not mix previously catalyzed material with new.

In order to avoid blockage of spray equipment, clean equipment before use or before periods of extended downtime with Reducer #54, R7K54.

Material must be at least 50°F (10°C) prior to catalyzing.

Quik-Kick Epoxy Accelerator is acceptable for use. See data page 4.99 for details.

When coating over aluminum and galvanizing, recommended dft is 2-4 mils (50-100 microns).

Refer to Product Information sheet for additional performance characteristics and properties.

SAFETY PRECAUTIONS

Refer to the MSDS sheet before use.

Published technical data and instructions are subject to change without notice. Contact your Sherwin-Williams representative for additional technical data and instructions.

WARRANTY

The Sherwin-Williams Company warrants our products to be free of manufacturing defects in accord with applicable Sherwin-Williams quality control procedures. Liability for products proven defective, if any, is limited to replacement of the defective product or the refund of the purchase price paid for the defective product as determined by Sherwin-Williams. NO OTHER WARRANTY OR GUARANTEE OF ANY KIND IS MADE BY SHERWIN-WILLIAMS, EXPRESSED OR IMPLIED, STATUTORY, BY OPERATION OF LAW OR OTHERWISE, INCLUDING MERCHANTABILITY AND FITNESS FOR A PARTICULAR PURPOSE.

MATERIAL SAFETY DATA SHEET

B67A5
17 00

DATE OF PREPARATION
May 8, 2011

SECTION 1 — PRODUCT AND COMPANY IDENTIFICATION

PRODUCT NUMBER
B67A5
PRODUCT NAME
Recoatable Epoxy Primer (Part G), Light Gray
MANUFACTURER'S NAME
THE SHERWIN-WILLIAMS COMPANY
101 Prospect Avenue N.W.
Cleveland, OH 44115

Telephone Numbers and Websites

Product Information	www.sherwin-williams.com
Regulatory Information	(216) 566-2902 www.paintdocs.com
Medical Emergency	(216) 566-2917
Transportation Emergency*	(800) 424-9300
**for Chemical Emergency ONLY (spill, leak, fire, exposure, or accident)*	

SECTION 2 — COMPOSITION/INFORMATION ON INGREDIENTS

% by Weight	CAS Number	Ingredient	Units	Vapor Pressure
2	**100-41-4**	**Ethylbenzene**		
		ACGIH TLV	100 PPM	7.1 mm
		ACGIH TLV	125 PPM STEL	
		OSHA PEL	100 PPM	
		OSHA PEL	125 PPM STEL	
12	**1330-20-7**	**Xylene**		
		ACGIH TLV	100 PPM	5.9 mm
		ACGIH TLV	150 PPM STEL	
		OSHA PEL	100 PPM	
		OSHA PEL	150 PPM STEL	
3	**2807-30-9**	**2-Propoxyethanol**		
		ACGIH TLV	Not Available	1.3 mm
		OSHA PEL	Not Available	
7	**68410-23-1**	**Polyamide**		
		ACGIH TLV	Not Available	
		OSHA PEL	Not Available	
47	**14808-60-7**	**Quartz**		
		ACGIH TLV	0.025 mg/m3 as Resp. Dust	
		OSHA PEL	0.1 mg/m3 as Resp. Dust	
14	**13463-67-7**	**Titanium Dioxide**		
		ACGIH TLV	10 mg/m3 as Dust	
		OSHA PEL	10 mg/m3 Total Dust	
		OSHA PEL	5 mg/m3 Respirable Fraction	
2	**1314-13-2**	**Zinc Oxide**		
		ACGIH TLV	10 mg/m3 as Dust	
		OSHA PEL	10 mg/m3 Total Dust	
		OSHA PEL	5 mg/m3 Respirable Fraction	

SECTION 3 — HAZARDS IDENTIFICATION

ROUTES OF EXPOSURE
INHALATION of vapor or spray mist.
EYE or SKIN contact with the product, vapor or spray mist.
EFFECTS OF OVEREXPOSURE
EYES: Irritation.
SKIN: Prolonged or repeated exposure may cause irritation.
INHALATION: Irritation of the upper respiratory system.

HMIS Codes

Health	3*
Flammability	3
Reactivity	0

May cause nervous system depression. Extreme overexposure may result in unconsciousness and possibly death.
Prolonged overexposure to hazardous ingredients in Section 2 may cause adverse chronic effects to the following organs or systems:

- the liver
- the urinary system
- the reproductive system

SIGNS AND SYMPTOMS OF OVEREXPOSURE

Headache, dizziness, nausea, and loss of coordination are indications of excessive exposure to vapors or spray mists.
Redness and itching or burning sensation may indicate eye or excessive skin exposure.

MEDICAL CONDITIONS AGGRAVATED BY EXPOSURE

May cause allergic skin reaction in susceptible persons or skin sensitization.

CANCER INFORMATION

For complete discussion of toxicology data refer to Section 11.

SECTION 4 — FIRST AID MEASURES

EYES: Flush eyes with large amounts of water for 15 minutes. Get medical attention.
SKIN: Wash affected area thoroughly with soap and water.
If irritation persists or occurs later, get medical attention.
Remove contaminated clothing and launder before re-use.
INHALATION: If affected, remove from exposure. Restore breathing. Keep warm and quiet.
INGESTION: Do not induce vomiting. Get medical attention immediately.

SECTION 5 — FIRE FIGHTING MEASURES

FLASH POINT	LEL	UEL	FLAMMABILITY CLASSIFICATION
80 °F PMCC	1.0	15.8	RED LABEL -- Flammable, Flash below 100 °F (38 °C)

EXTINGUISHING MEDIA

Carbon Dioxide, Dry Chemical, Foam

UNUSUAL FIRE AND EXPLOSION HAZARDS

Closed containers may explode when exposed to extreme heat.
Application to hot surfaces requires special precautions.
During emergency conditions overexposure to decomposition products may cause a health hazard. Symptoms may not be immediately apparent. Obtain medical attention.

SPECIAL FIRE FIGHTING PROCEDURES

Full protective equipment including self-contained breathing apparatus should be used.
Water spray may be ineffective. If water is used, fog nozzles are preferable. Water may be used to cool closed containers to prevent pressure build-up and possible autoignition or explosion when exposed to extreme heat.

SECTION 6 — ACCIDENTAL RELEASE MEASURES

STEPS TO BE TAKEN IN CASE MATERIAL IS RELEASED OR SPILLED

Remove all sources of ignition. Ventilate the area.
Remove with inert absorbent.

SECTION 7 — HANDLING AND STORAGE

STORAGE CATEGORY

DOL Storage Class IC

PRECAUTIONS TO BE TAKEN IN HANDLING AND STORAGE

Contents are FLAMMABLE. Keep away from heat, sparks, and open flame.
During use and until all vapors are gone: Keep area ventilated - Do not smoke - Extinguish all flames, pilot lights, and heaters - Turn off stoves, electric tools and appliances, and any other sources of ignition.
Consult NFPA Code. Use approved Bonding and Grounding procedures.
Keep container closed when not in use. Transfer only to approved containers with complete and appropriate labeling. Do not take internally. Keep out of the reach of children.

SECTION 8 — EXPOSURE CONTROLS/PERSONAL PROTECTION

PRECAUTIONS TO BE TAKEN IN USE

Use only with adequate ventilation.
Avoid contact with skin and eyes. Avoid breathing vapor and spray mist.
Wash hands after using.
This coating may contain materials classified as nuisance particulates (listed "as Dust" in Section 2) which may be present at hazardous levels only during sanding or abrading of the dried film. If no specific dusts are listed in Section 2, the applicable limits for nuisance dusts are ACGIH TLV 10 mg/m3 (total dust), 3 mg/m3 (respirable fraction), OSHA PEL 15 mg/m3 (total dust), 5 mg/m3 (respirable fraction).

VENTILATION

Local exhaust preferable. General exhaust acceptable if the exposure to materials in Section 2 is maintained below applicable exposure limits. Refer to OSHA Standards 1910.94, 1910.107, 1910.108.

RESPIRATORY PROTECTION

If personal exposure cannot be controlled below applicable limits by ventilation, wear a properly fitted organic vapor/particulate respirator approved by NIOSH/MSHA for protection against materials in Section 2.

When sanding or abrading the dried film, wear a dust/mist respirator approved by NIOSH/MSHA for dust which may be generated from this product, underlying paint, or the abrasive.

PROTECTIVE GLOVES

Wear gloves which are recommended by glove supplier for protection against materials in Section 2.

EYE PROTECTION

Wear safety spectacles with unperforated sideshields.

OTHER PROTECTIVE EQUIPMENT

Use of barrier cream on exposed skin is recommended.

OTHER PRECAUTIONS

This product must be mixed with other components before use. Before opening the packages, READ AND FOLLOW WARNING LABELS ON ALL COMPONENTS.

Intentional misuse by deliberately concentrating and inhaling the contents can be harmful or fatal.

SECTION 9 — PHYSICAL AND CHEMICAL PROPERTIES

PRODUCT WEIGHT	14.59 lb/gal	1748 g/l
SPECIFIC GRAVITY	1.76	
BOILING POINT	277 - 308 °F	136 - 153 °C
MELTING POINT	Not Available	
VOLATILE VOLUME	35%	
EVAPORATION RATE	Slower than ether	
VAPOR DENSITY	Heavier than air	
SOLUBILITY IN WATER	N.A.	

VOLATILE ORGANIC COMPOUNDS (VOC Theoretical - As Packaged)

2.56 lb/gal	307 g/l	Less Water and Federally Exempt Solvents
2.56 lb/gal	307 g/l	Emitted VOC

SECTION 10 — STABILITY AND REACTIVITY

STABILITY — Stable

CONDITIONS TO AVOID

None known.

INCOMPATIBILITY

None known.

HAZARDOUS DECOMPOSITION PRODUCTS

By fire: Carbon Dioxide, Carbon Monoxide

HAZARDOUS POLYMERIZATION

Will not occur

SECTION 11 — TOXICOLOGICAL INFORMATION

CHRONIC HEALTH HAZARDS

Reports have associated repeated and prolonged overexposure to solvents with permanent brain and nervous system damage.

Ethylbenzene is classified by IARC as possibly carcinogenic to humans (2B) based on inadequate evidence in humans and sufficient evidence in laboratory animals. Lifetime inhalation exposure of rats and mice to high ethylbenzene concentrations resulted in increases in certain types of cancer, including kidney tumors in rats and lung and liver tumors in mice. These effects were not observed in animals exposed to lower concentrations. There is no evidence that ethylbenzene causes cancer in humans.

Crystalline Silica (Quartz, Cristobalite) is listed by IARC and NTP. Long term exposure to high levels of silica dust, which can occur only when sanding or abrading the dry film, may cause lung damage (silicosis) and possibly cancer.

IARC's Monograph No. 93 reports there is sufficient evidence of carcinogenicity in experimental rats exposed to titanium dioxide but inadequate evidence for carcinogenicity in humans and has assigned a Group 2B rating. In addition, the IARC summary concludes, "No significant exposure to titanium dioxide is thought to occur during the use of products in which titanium is bound to other materials, such as paint."

TOXICOLOGY DATA

CAS No.	Ingredient Name			
100-41-4	**Ethylbenzene**			
		LC50 RAT	4HR	Not Available
		LD50 RAT		3500 mg/kg
1330-20-7	**Xylene**			
		LC50 RAT	4HR	5000 ppm
		LD50 RAT		4300 mg/kg
2807-30-9	**2-Propoxyethanol**			
		LC50 RAT	4HR	Not Available
		LD50 RAT		3090 mg/kg
68410-23-1	**Polyamide**			
		LC50 RAT	4HR	Not Available
		LD50 RAT		Not Available
14808-60-7	**Quartz**			
		LC50 RAT	4HR	Not Available
		LD50 RAT		Not Available
13463-67-7	**Titanium Dioxide**			
		LC50 RAT	4HR	Not Available
		LD50 RAT		Not Available
1314-13-2	**Zinc Oxide**			
		LC50 RAT	4HR	Not Available
		LD50 RAT		Not Available

SECTION 12 — ECOLOGICAL INFORMATION

ECOTOXICOLOGICAL INFORMATION

No data available.

SECTION 13 — DISPOSAL CONSIDERATIONS

WASTE DISPOSAL METHOD

Waste from this product may be hazardous as defined under the Resource Conservation and Recovery Act (RCRA) 40 CFR 261.
Waste must be tested for ignitability to determine the applicable EPA hazardous waste numbers.
Incinerate in approved facility. Do not incinerate closed container. Dispose of in accordance with Federal, State/Provincial, and Local regulations regarding pollution.

SECTION 14 — TRANSPORT INFORMATION

Multi-modal shipping descriptions are provided for informational purposes and do not consider container sizes. The presence of a shipping description for a particular mode of transport (ocean, air, etc.), does not indicate that the product is packaged suitably for that mode of transport. All packaging must be reviewed for suitability prior to shipment, and compliance with the applicable regulations is the sole responsibility of the person offering the product for transport.

US Ground (DOT)

5 Liters (1.3 Gallons) and Less may be Classed as CONSUMER COMMODITY, ORM-D
Larger Containers are Regulated as:
UN1263, PAINT, 3, PG III, (ERG#128)

DOT (Dept of Transportation) Hazardous Substances & Reportable Quantities

Ethyl benzene 1000 lb RQ
Xylenes (isomers and mixture) 100 lb RQ

Bulk Containers may be Shipped as (check reportable quantities):

RQ, UN1263, PAINT, 3, PG III, (XYLENES (ISOMERS AND MIXTURE)), (ERG#128)

Canada (TDG)

UN1263, PAINT, CLASS 3, PG III, LIMITED QUANTITY, (ERG#128)

IMO

5 Liters (1.3 Gallons) and Less may be Shipped as Limited Quantity.
UN1263, PAINT, CLASS 3, PG III, (27 C c.c.), EmS F-E, S-E, ADR (D/E)

IATA/ICAO

UN1263, PAINT, 3, PG III

SECTION 15 — REGULATORY INFORMATION

SARA 313 *(40 CFR 372.65C)* SUPPLIER NOTIFICATION

CAS No.	CHEMICAL/COMPOUND	% by WT	% Element
100-41-4	Ethylbenzene	2	
1330-20-7	Xylene	12	
	Zinc Compound	6	3.3
	Glycol Ethers	3	

CALIFORNIA PROPOSITION 65

WARNING: This product contains chemicals known to the State of California to cause cancer and birth defects or other reproductive harm.

TSCA CERTIFICATION

All chemicals in this product are listed, or are exempt from listing, on the TSCA Inventory.

SECTION 16 — OTHER INFORMATION

This product has been classified in accordance with the hazard criteria of the Canadian Controlled Products Regulations (CPR) and the MSDS contains all of the information required by the CPR.

The above information pertains to this product as currently formulated, and is based on the information available at this time. Addition of reducers or other additives to this product may substantially alter the composition and hazards of the product. Since conditions of use are outside our control, we make no warranties, express or implied, and assume no liability in connection with any use of this information.

Protective & Marine Coatings

ACROLON™ 218 HS
ACRYLIC POLYURETHANE

PART A	B65-600	GLOSS SERIES
PART A	B65-650	SEMI-GLOSS SERIES
PART B	B65V600	HARDENER

Revised 5/11 — **PRODUCT INFORMATION** — 5.22

PRODUCT DESCRIPTION

ACROLON 218 HS is a low VOC, polyester modified, aliphatic, acrylic polyurethane formulated specifically for in-shop applications. Also suitable for industrial applications. A fast drying, urethane that provides color and gloss retention for exterior exposure.

- Can be used directly over organic zinc rich primers (epoxy zinc primer and moisture cure urethane zinc primer)
- Color and gloss retention for exterior exposure
- Fast dry
- Outstanding application properties

PRODUCT CHARACTERISTICS

Finish:	Gloss or Semi-Gloss
Color:	Wide range of colors available
Volume Solids:	65% ± 2%, mixed, may vary by color
Weight Solids:	78% ± 2%, mixed, may vary by color
VOC (EPA Method 24):	Unreduced: <300 g/L; 2.5 lb/gal
mixed	Reduced 10% with R7K15: <340 g/L; 2.8 lb/gal
mixed	Reduced 9% with MEK, R6K10: <340 g/L; 2.8 lb/gal
Mix Ratio:	6:1 by volume, 1 gallon or 5 gallon mixes premeasured components

Recommended Spreading Rate per coat:

	Minimum	Maximum
Wet mils (microns)	**4.5** (112.5)	**9.0** (225)
Dry mils (microns)	**3.0** (75)	**6.0** (150)
~Coverage sq ft/gal (m^2/L)	**175** (4.3)	**346** (8.5)
Theoretical coverage **sq ft/gal** (m^2/L) @ 1 mil / 25 microns dft	**1040** (25.5)	

NOTE: Brush or roll application may require multiple coats to achieve maximum film thickness and uniformity of appearance.

Drying Schedule @ 6.0 mils wet (150 microns):

	@ 35°F/1.7°C	@ 77°F/25°C *50% RH*	@ 120°F/49°C
To touch:	4 hours	30 minutes	20 minutes
To handle:	18 hours	6 hours	4 hours
To recoat:			
minimum:	18 hours	8 hours	6 hours
maximum:	3 months	3 months	3 months
To cure:	14 days	7 days	5 days
Pot Life: (reduced 5% with Reducer R7K15)	4 hours	2 hours	45 minutes
Sweat-in-Time:		None	

If maximum recoat time is exceeded, abrade surface before recoating. Drying time is temperature, humidity, and film thickness dependent. Paint temperature must be at least 40°F (4.5°C) minimum.

Shelf Life:	Part A - 36 months, unopened Part B - 24 months, unopened Store indoors at 40°F (4.5°C) to 100°F (38°C).
Flash Point:	55°F (13°C), Seta, mixed
Reducer/Clean Up:	
Spray:	Reducer R7K15, MEK R6K10, or R7K111
Brush / Roll:	Reducer #132, R7K132 or R7K111

RECOMMENDED USES

Specifically formulated for in-shop applications.
For use over prepared metal and masonry surfaces in industrial environments such as:

- Structural steel
- Rail cars and locomotives
- Conveyors
- Bridges
- Tank exteriors
- Pipelines
- Ships
- Wind Towers - onshore and offshore
- Offshore platforms - exploration and production
- Suitable for use in USDA inspected facilities
- Conforms to AWWA D102 Outside Coating Systems #4 (OCS-4), #5 (OCS-5) & #6 (OCS-6)
- Acceptable for use in high performance architectural applications

PERFORMANCE CHARACTERISTICS

Substrate*: Steel
Surface Preparation*: SSPC-SP10/NACE 2
System Tested*:
1 ct. Macropoxy 646 @ 6.0 mils (150 microns) dft
1 ct. Acrolon 218 HS Gloss @ 4.0 mils (100 microns) dft
*unless otherwise noted below

Test Name	Test Method	Results
Abrasion Resistance[1]	ASTM D4060, CS17 wheel, 1000 cycles, 1 kg load	43 mg loss
Adhesion	ASTM D4541	975 psi
Corrosion Weathering[2]	ASTM D5894, 9 cycles, 3024 hours	Rating 10 per ASTM D610, for rusting; Rating 10 per ASTM D714, for blistering
Direct Impact Resistance[1]	ASTM D2794	50 in. lb.
Dry Heat Resistance[1]	ASTM D2485, Method A	200°F (93°C)
Flexibility[1]	ASTM D522, 180° bend, 1/8" mandrel	Passes
Humidity Resistance[2]	ASTM D4585, 100°F (38°C), 1500 hours	Rating 10 per ASTM D610, for rusting; Rating 10 per ASTM D714, for blistering
Pencil Hardness	ASTM D3363	3H
Salt Fog Resistance[2]	ASTM B117, 7000 hours	Rating 10 per ASTM D610, for rusting; Rating 9 per ASTM D714, for blistering

Meets the requirements of SSPC Paint No. 36, Level 3.

Complies with ISO 12944-5 C5I and C5M requirements.

Footnotes:
[1] *Finish coat only tested*
[2] *Primer — Zinc-Clad II Plus*
Intermediate — Macropoxy 646
Finish — Acrolon 218 HS

continued on back

Protective & Marine Coatings

ACROLON™ 218 HS
ACRYLIC POLYURETHANE

PART A	B65-600	GLOSS SERIES
PART A	B65-650	SEMI-GLOSS SERIES
PART B	B65V600	HARDENER

PRODUCT INFORMATION

5.22

RECOMMENDED SYSTEMS

		Dry Film Thickness / ct. Mils	(Microns)
Steel:			
1 ct.	Macropoxy 646	5.0-10.0	(125-250)
1-2 cts.	Acrolon 218 HS Polyurethane	3.0-6.0	(75-150)
Steel:			
1 ct.	Zinc Clad II Plus	3.0-5.0	(75-125)
1 ct.	Macropoxy 646	5.0-10.0	(125-250)
1-2 cts.	Acrolon 218 HS Polyurethane	3.0-6.0	(75-150)
Steel:			
1 ct.	Zinc Clad IV	3.0-5.0	(75-125)
1-2 cts.	Acrolon 218 HS Polyurethane	3.0-6.0	(75-150)
Steel:			
1 ct.	Corothane I-GalvaPac Zinc Primer	3.0-4.0	(75-100)
1-2 cts.	Acrolon 218 HS Polyurethane	3.0-6.0	(75-150)
Steel:			
1 ct.	Epoxy Mastic Aluminum II	6.0	(150)
1-2 cts.	Acrolon 218 HS Polyurethane	3.0-6.0	(75-150)
Steel:			
1 ct.	Recoatable Epoxy Primer	4.0-6.0	(100-150)
1-2 cts.	Acrolon 218 HS Polyurethane	3.0-6.0	(75-150)
Concrete/Masonry:			
1 ct.	Kem Cati-Coat HS Epoxy Filler/Sealer	10.0-20.0	(250-500)
1-2 cts.	Acrolon 218 HS Polyurethane	3.0-6.0	(75-150)
Aluminum/Galvanizing:			
1 ct.	DTM Wash Primer	0.7-1.3	(18-32)
1-2 cts.	Acrolon 218 HS Polyurethane	3.0-6.0	(75-150)
ISO 12944 C5M System:			
1 ct.	Zinc Clad III HS	3.0-5.0	(75-125)
1 ct.	Tower Guard Epoxy	5.0-11.5	(125-287.5)
1 ct.	Acrolon 218 HS	3.0-6.0	(75-150)

The systems listed above are representative of the product's use, other systems may be appropriate.

DISCLAIMER

The information and recommendations set forth in this Product Data Sheet are based upon tests conducted by or on behalf of The Sherwin-Williams Company. Such information and recommendations set forth herein are subject to change and pertain to the product offered at the time of publication. Consult your Sherwin-Williams representative to obtain the most recent Product Data Information and Application Bulletin.

SURFACE PREPARATION

Surface must be clean, dry, and in sound condition. Remove all oil, dust, grease, dirt, loose rust, and other foreign material to ensure adequate adhesion.

Refer to product Application Bulletin for detailed surface preparation information.

Minimum recommended surface preparation:
* Iron & Steel: SSPC-SP6/NACE 3, 1-2 mil (25-50 micron) profile
* Galvanizing: SSPC-SP1
* Concrete & Masonry: SSPC-SP13/NACE 6, or ICRI No. 310.2, CSP 1-3
* Primer required

Surface Preparation Standards

	Condition of Surface	ISO 8501-1 BS7079:A1	Swedish Std. SIS055900	SSPC	NACE
White Metal		Sa 3	Sa 3	SP 5	1
Near White Metal		Sa 2.5	Sa 2.5	SP 10	2
Commercial Blast		Sa 2	Sa 2	SP 6	3
Brush-Off Blast		Sa 1	Sa 1	SP 7	4
Hand Tool Cleaning	Rusted	C St 2	C St 2	SP 2	-
	Pitted & Rusted	D St 2	D St 2	SP 2	-
Power Tool Cleaning	Rusted	C St 3	C St 3	SP 3	-
	Pitted & Rusted	D St 3	D St 3	SP 3	-

TINTING

Tint Part A with Maxitoner Colorants.
- Extra white tints at 100% tint strength
- Ultradeep base tints at 150% tint strength

Five minutes minimum mixing on a mechanical shaker is required for complete mixing of color.

APPLICATION CONDITIONS

Temperature:	35°F (1.7°C) minimum, 120°F (49°C) maximum (air and surface) 40°F (4.5°C) minimum, 120°F (49°C) maximum (material) At least 5°F (2.8°C) above dew point
Relative humidity:	85% maximum

Refer to product Application Bulletin for detailed application information.

ORDERING INFORMATION

Packaging:	1 gallon (3.78L) mix:	5 gallon (18.9L) mix:
Part A:	.86 gal (3.25L)	4.29 gal (16.2L)
Part B:	.14 gal (0.53L)	0.71 gal (2.7L)
(premeasured components)		

Weight: 11.2 ± 0.2 lb/gal ; 1.3 Kg/L mixed, may vary with color

SAFETY PRECAUTIONS

Refer to the MSDS sheet before use.

Published technical data and instructions are subject to change without notice. Contact your Sherwin-Williams representative for additional technical data and instructions.

WARRANTY

The Sherwin-Williams Company warrants our products to be free of manufacturing defects in accord with applicable Sherwin-Williams quality control procedures. Liability for products proven defective, if any, is limited to replacement of the defective product or the refund of the purchase price paid for the defective product as determined by Sherwin-Williams. NO OTHER WARRANTY OR GUARANTEE OF ANY KIND IS MADE BY SHERWIN-WILLIAMS, EXPRESSED OR IMPLIED, STATUTORY, BY OPERATION OF LAW OR OTHERWISE, INCLUDING MERCHANTABILITY AND FITNESS FOR A PARTICULAR PURPOSE.

Protective & Marine Coatings

ACROLON™ 218 HS
ACRYLIC POLYURETHANE

PART A	B65-600	GLOSS SERIES
PART A	B65-650	SEMI-GLOSS SERIES
PART B	B65V600	HARDENER

Revised 5/11 **APPLICATION BULLETIN** 5.22

SURFACE PREPARATIONS

Surface must be clean, dry, and in sound condition. Remove all oil, dust, grease, dirt, loose rust, and other foreign material to ensure adequate adhesion.

Iron & Steel
Remove all oil and grease from surface by Solvent Cleaning per SSPC-SP1. Minimum surface preparation is Commercial Blast Cleaning per SSPC-SP6/NACE 3. For better performance, use Near White Metal Blast Cleaning per SSPC-SP10/NACE 2. Blast clean all surfaces using a sharp, angular abrasive for optimum surface profile (1-2 mils / 25-50 microns). Prime any bare steel the same day as it is cleaned or before flash rusting occurs.

Aluminum
Remove all oil, grease, dirt, oxide and other foreign material by Solvent Cleaning per SSPC-SP1. Primer required.

Galvanized Steel
Allow to weather a minimum of six months prior to coating. Solvent Clean per SSPC-SP1. When weathering is not possible, or the surface has been treated with chromates or silicates, first Solvent Clean per SSPC-SP1 and apply a test patch. Allow paint to dry at least one week before testing adhesion. If adhesion is poor, brush blasting per SSPC-SP7 is necessary to remove these treatments. Rusty galvanizing requires a minimum of Hand Tool Cleaning per SSPC-SP2, prime the area the same day as cleaned or before flash rusting occurs. Primer required.

Concrete and Masonry
For surface preparation, refer to SSPC-SP13/NACE 6, or ICRI No. 310.2, CSP 1-3. Surfaces should be thoroughly clean and dry. Concrete and mortar must be cured at least 28 days @ 75°F (24°C). Remove all loose mortar and foreign material. Surface must be free of laitance, concrete dust, dirt, form release agents, moisture curing membranes, loose cement and hardeners. Fill bug holes, air pockets and other voids with Steel-Seam FT910. Primer required.

Follow the standard methods listed below when applicable:
ASTM D4258 Standard Practice for Cleaning Concrete.
ASTM D4259 Standard Practice for Abrading Concrete.
ASTM D4260 Standard Practice for Etching Concrete.
ASTM F1869 Standard Test Method for Measuring Moisture Vapor Emission Rate of Concrete.
SSPC-SP 13/Nace 6 Surface Preparation of Concrete.
ICRI No. 310.2 Concrete Surface Preparation.

Surface Preparation Standards

	Condition of Surface	ISO 8501-1 BS7079:A1	Swedish Std. SIS055900	SSPC	NACE
White Metal		Sa 3	Sa 3	SP 5	1
Near White Metal		Sa 2.5	Sa 2.5	SP 10	2
Commercial Blast		Sa 2	Sa 2	SP 6	3
Brush-Off Blast		Sa 1	Sa 1	SP 7	4
Hand Tool Cleaning	Rusted	C St 2	C St 2	SP 2	-
	Pitted & Rusted	D St 2	D St 2	SP 2	-
Power Tool Cleaning	Rusted	C St 3	C St 3	SP 3	-
	Pitted & Rusted	D St 3	D St 3	SP 3	-

APPLICATION CONDITIONS

Temperature: 35°F (1.7°C) minimum, 120°F (49°C) maximum (air and surface)
40°F (4.5°C) minimum, 120°F (49°C) maximum (material)
At least 5°F (2.8°C) above dew point

Relative humidity: 85% maximum

APPLICATION EQUIPMENT

The following is a guide. Changes in pressures and tip sizes may be needed for proper spray characteristics. Always purge spray equipment before use with listed reducer. Any reduction must be compliant with existing VOC regulations and compatible with the existing environmental and application conditions.

Reducer/Clean Up:
Spray.....Reducer R7K15, MEK R6K10, or R7K111
Brush/Roll .....Reducer #132, R7K132, or R7K111
If reducer is used, reduce at time of catalyzation.

Airless Spray
Pressure.....2500 - 2800 psi
Hose.....3/8" ID
Tip .....013" - .017"
Filter.....60 mesh
Reduction.....As needed up to 10% by volume with R7K15 or R7K111, or up to 9% with MEK, R6K10*

Conventional Spray
Gun .....Binks 95
Cap 63P
Atomization Pressure.....50 - 70 psi
Fluid Pressure.....20 - 25 psi
Reduction.....As needed up to 10% by volume with R7K15 or R7K111, or up to 9% with MEK, R6K10*

Brush
Brush.....Natural Bristle
Reduction.....As needed up to 10% by volume*

Roller
Cover .....3/8" woven with solvent resistant core
Reduction.....As needed up to 10% by volume*

If specific application equipment is not listed above, equivalent equipment may be substituted.

* Note: Reducing more than maximum recommended level will result in exceed VOC exceeding 340g/L

continued on back

Protective & Marine Coatings

ACROLON™ 218 HS
ACRYLIC POLYURETHANE

PART A	B65-600	GLOSS SERIES
PART A	B65-650	SEMI-GLOSS SERIES
PART B	B65V600	HARDENER

APPLICATION BULLETIN

APPLICATION PROCEDURES

Surface preparation must be completed as indicated.

Mix contents of each component thoroughly with low speed power agitation. Make certain no pigment remains on the bottom of the can. Then combine six parts by volume of Part A with one part by volume of Part B (premeasured components). Thoroughly agitate the mixture with power agitation. Re-stir before using.

If reducer is used, add only after both components have been thoroughly mixed.

Apply paint at the recommended film thickness and spreading rate as indicated below:

Recommended Spreading Rate per coat:

	Minimum	Maximum
Wet mils (microns)	**4.5** (112.5)	**9.0** (225)
Dry mils (microns)	**3.0** (75)	**6.0** (150)
~Coverage sq ft/gal (m^2/L)	**175** (4.3)	**346** (8.5)
Theoretical coverage **sq ft/gal** (m^2/L) @ 1 mil / 25 microns dft	**1040** (25.5)	

NOTE: Brush or roll application may require multiple coats to achieve maximum film thickness and uniformity of appearance.

Drying Schedule @ 6.0 mils wet (150 microns):

	@ 35°F/1.7°C	@ 77°F/25°C *50% RH*	@ 120°F/49°C
To touch:	4 hours	30 minutes	20 minutes
To handle:	18 hours	6 hours	4 hours
To recoat:			
minimum:	18 hours	8 hours	6 hours
maximum:	3 months	3 months	3 months
To cure:	14 days	7 days	5 days
Pot Life: (reduced 5% with Reducer R7K15)	4 hours	2 hours	45 minutes
Sweat-in-Time:		None	

If maximum recoat time is exceeded, abrade surface before recoating. Drying time is temperature, humidity, and film thickness dependent. Paint temperature must be at least 40°F (4.5°C) minimum.

Application of coating above maximum or below minimum recommended spreading rate may adversely affect coating performance.

CLEAN UP INSTRUCTIONS

Clean spills and spatters immediately with Reducer #132, R7K132. Clean tools immediately after use with Reducer #132, R7K132. Follow manufacturer's safety recommendations when using any solvent.

DISCLAIMER

The information and recommendations set forth in this Product Data Sheet are based upon tests conducted by or on behalf of The Sherwin-Williams Company. Such information and recommendations set forth herein are subject to change and pertain to the product offered at the time of publication. Consult your Sherwin-Williams representative to obtain the most recent Product Data Information and Application Bulletin.

PERFORMANCE TIPS

Stripe coat all crevices, welds, and sharp angles to prevent early failure in these areas.

When using spray application, use a 50% overlap with each pass of the gun to avoid holidays, bare areas, and pinholes. If necessary, cross spray at a right angle.

Spreading rates are calculated on volume solids and do not include an application loss factor due to surface profile, roughness or porosity of the surface, skill and technique of the applicator, method of application, various surface irregularities, material lost during mixing, spillage, overthinning, climatic conditions, and excessive film build.

Excessive reduction of material can affect film build, appearance, and adhesion.

Do not apply the material beyond recommended pot life.

Do not mix previously catalyzed material with new.

In order to avoid blockage of spray equipment, clean equipment before use or before periods of extended downtime with Reducer #15, R7K15 or MEK, R6K10.

Mixed coating is sensitive to water. Use water traps in all air lines. Moisture contact can reduce pot life and affect gloss and color.

Quick-Thane Urethane Accelerator is acceptable for use. See data page 5.97 for details.

E-Z Roll Urethane Defoamer is acceptable for use. See data page 5.99 for details.

Refer to Product Information sheet for additional performance characteristics and properties.

SAFETY PRECAUTIONS

Refer to the MSDS sheet before use.

Published technical data and instructions are subject to change without notice. Contact your Sherwin-Williams representative for additional technical data and instructions.

WARRANTY

The Sherwin-Williams Company warrants our products to be free of manufacturing defects in accord with applicable Sherwin-Williams quality control procedures. Liability for products proven defective, if any, is limited to replacement of the defective product or the refund of the purchase price paid for the defective product as determined by Sherwin-Williams. NO OTHER WARRANTY OR GUARANTEE OF ANY KIND IS MADE BY SHERWIN-WILLIAMS, EXPRESSED OR IMPLIED, STATUTORY, BY OPERATION OF LAW OR OTHERWISE, INCLUDING MERCHANTABILITY AND FITNESS FOR A PARTICULAR PURPOSE.

MATERIAL SAFETY DATA SHEET

B65T654
12 00

DATE OF PREPARATION
May 8, 2011

SECTION 1 — PRODUCT AND COMPANY IDENTIFICATION

PRODUCT NUMBER
B65T654
PRODUCT NAME
ACROLON™ 218 HS Polyurethane - Semi-Gloss (Part A), Ultradeep/Clear Tint Base
MANUFACTURER'S NAME
THE SHERWIN-WILLIAMS COMPANY
101 Prospect Avenue N.W.
Cleveland, OH 44115

Telephone Numbers and Websites

Product Information	www.sherwin-williams.com
Regulatory Information	(216) 566-2902 www.paintdocs.com
Medical Emergency	(216) 566-2917
Transportation Emergency*	(800) 424-9300
**for Chemical Emergency ONLY (spill, leak, fire, exposure, or accident)*	

SECTION 2 — COMPOSITION/INFORMATION ON INGREDIENTS

% by Weight	CAS Number	Ingredient	Units		Vapor Pressure
0.2	**100-41-4**	**Ethylbenzene**			
		ACGIH TLV	100	PPM	7.1 mm
		ACGIH TLV	125	PPM STEL	
		OSHA PEL	100	PPM	
		OSHA PEL	125	PPM STEL	
1	**1330-20-7**	**Xylene**			
		ACGIH TLV	100	PPM	5.9 mm
		ACGIH TLV	150	PPM STEL	
		OSHA PEL	100	PPM	
		OSHA PEL	150	PPM STEL	
1	**64742-94-5**	**Medium Aromatic Hydrocarbons**			
		ACGIH TLV	Not Available		0.12 mm
		OSHA PEL	Not Available		
0.2	**91-20-3**	**Naphthalene**			
		ACGIH TLV	10	PPM	1 mm
		ACGIH TLV	15	PPM STEL	
		OSHA PEL	10	PPM	
		OSHA PEL	15	PPM STEL	
7	**78-93-3**	**Methyl Ethyl Ketone**			
		ACGIH TLV	200	PPM	70 mm
		ACGIH TLV	300	PPM STEL	
		OSHA PEL	200	PPM	
		OSHA PEL	300	PPM STEL	
10	**123-86-4**	**n-Butyl Acetate**			
		ACGIH TLV	150	PPM	10 mm
		ACGIH TLV	200	PPM STEL	
		OSHA PEL	150	PPM	
		OSHA PEL	200	PPM STEL	
7	**108-65-6**	**1-Methoxy-2-Propanol Acetate**			
		ACGIH TLV	Not Available		1.8 mm
		OSHA PEL	Not Available		
21	**14808-60-7**	**Quartz**			
		ACGIH TLV	0.025	mg/m3 as Resp. Dust	
		OSHA PEL	0.1	mg/m3 as Resp. Dust	
5	**112926-00-8**	**Amorphous Precipitated Silica**			
		ACGIH TLV	10	mg/m3 as Dust	
		OSHA PEL	6	mg/m3 as Dust	

SECTION 3 — HAZARDS IDENTIFICATION

HMIS Codes	
Health	2*
Flammability	3
Reactivity	0

ROUTES OF EXPOSURE

INHALATION of vapor or spray mist.
EYE or SKIN contact with the product, vapor or spray mist.

EFFECTS OF OVEREXPOSURE

EYES: Irritation.
SKIN: Prolonged or repeated exposure may cause irritation.
INHALATION: Irritation of the upper respiratory system.

May cause nervous system depression. Extreme overexposure may result in unconsciousness and possibly death.
Prolonged overexposure to hazardous ingredients in Section 2 may cause adverse chronic effects to the following organs or systems:

- the liver
- the urinary system
- the hematopoietic (blood-forming) system
- the reproductive system

SIGNS AND SYMPTOMS OF OVEREXPOSURE

Headache, dizziness, nausea, and loss of coordination are indications of excessive exposure to vapors or spray mists.
Redness and itching or burning sensation may indicate eye or excessive skin exposure.

MEDICAL CONDITIONS AGGRAVATED BY EXPOSURE

May cause allergic respiratory and/or skin reaction in susceptible persons or sensitization. This effect may be delayed several hours after exposure.
Persons sensitive to isocyanates will experience increased allergic reaction on repeated exposure.

CANCER INFORMATION

For complete discussion of toxicology data refer to Section 11.

SECTION 4 — FIRST AID MEASURES

EYES: Flush eyes with large amounts of water for 15 minutes. Get medical attention.
SKIN: Wash affected area thoroughly with soap and water.
Remove contaminated clothing and launder before re-use.
INHALATION: If any breathing problems occur during use, **LEAVE THE AREA** and get fresh air. If problems remain or occur later, **IMMEDIATELY** get medical attention.
INGESTION: Do not induce vomiting. Get medical attention immediately.

SECTION 5 — FIRE FIGHTING MEASURES

FLASH POINT	LEL	UEL	FLAMMABILITY CLASSIFICATION
55 °F PMCC	0.8	13.1	RED LABEL -- Flammable, Flash below 100 °F (38 °C)

EXTINGUISHING MEDIA

Carbon Dioxide, Dry Chemical, Foam

UNUSUAL FIRE AND EXPLOSION HAZARDS

Closed containers may explode when exposed to extreme heat.
Application to hot surfaces requires special precautions.
During emergency conditions overexposure to decomposition products may cause a health hazard. Symptoms may not be immediately apparent. Obtain medical attention.

SPECIAL FIRE FIGHTING PROCEDURES

Full protective equipment including self-contained breathing apparatus should be used.
Water spray may be ineffective. If water is used, fog nozzles are preferable. Water may be used to cool closed containers to prevent pressure build-up and possible autoignition or explosion when exposed to extreme heat.

SECTION 6 — ACCIDENTAL RELEASE MEASURES

STEPS TO BE TAKEN IN CASE MATERIAL IS RELEASED OR SPILLED

Remove all sources of ignition. Ventilate the area.
Remove with inert absorbent.

SECTION 7 — HANDLING AND STORAGE

STORAGE CATEGORY

DOL Storage Class IB

PRECAUTIONS TO BE TAKEN IN HANDLING AND STORAGE

Contents are FLAMMABLE. Keep away from heat, sparks, and open flame.
During use and until all vapors are gone: Keep area ventilated - Do not smoke - Extinguish all flames, pilot lights, and heaters - Turn off stoves, electric tools and appliances, and any other sources of ignition.
Consult NFPA Code. Use approved Bonding and Grounding procedures.

Keep container closed when not in use. Transfer only to approved containers with complete and appropriate labeling. Do not take internally. Keep out of the reach of children.

SECTION 8 — EXPOSURE CONTROLS/PERSONAL PROTECTION

PRECAUTIONS TO BE TAKEN IN USE

NO PERSON SHOULD USE THIS PRODUCT, OR BE IN THE AREA WHERE IT IS BEING USED, IF THEY HAVE CHRONIC (LONG-TERM) LUNG OR BREATHING PROBLEMS OR IF THEY EVER HAD A REACTION TO ISOCYANATES.

Use only with adequate ventilation.

Avoid contact with skin and eyes. Avoid breathing vapor and spray mist.

Wash hands after using.

This coating may contain materials classified as nuisance particulates (listed "as Dust" in Section 2) which may be present at hazardous levels only during sanding or abrading of the dried film. If no specific dusts are listed in Section 2, the applicable limits for nuisance dusts are ACGIH TLV 10 mg/m3 (total dust), 3 mg/m3 (respirable fraction), OSHA PEL 15 mg/m3 (total dust), 5 mg/m3 (respirable fraction).

VENTILATION

Local exhaust preferable. General exhaust acceptable if the exposure to materials in Section 2 is maintained below applicable exposure limits. Refer to OSHA Standards 1910.94, 1910.107, 1910.108.

RESPIRATORY PROTECTION

Where overspray is present, a positive pressure air supplied respirator (TC19C NIOSH/MSHA approved) should be worn. If unavailable, a properly fitted organic vapor/particulate respirator approved by NIOSH/MSHA for protection against materials in Section 2 may be effective. Follow respirator manufacturers directions for use. Wear the respirator for the whole time of spraying and until all vapors and mists are gone. **NO PERSONS SHOULD BE ALLOWED IN THE AREA WHERE THIS PRODUCT IS BEING USED UNLESS EQUIPPED WITH THE SAME RESPIRATOR PROTECTION RECOMMENDED FOR THE PAINTERS.**

When sanding or abrading the dried film, wear a dust/mist respirator approved by NIOSH/MSHA for dust which may be generated from this product, underlying paint, or the abrasive.

PROTECTIVE GLOVES

To prevent skin contact, wear gloves which are recommended by glove supplier for protection against materials in Section 2.

EYE PROTECTION

Wear safety spectacles with unperforated sideshields.

OTHER PROTECTIVE EQUIPMENT

Use barrier cream on exposed skin.

OTHER PRECAUTIONS

This product must be mixed with other components before use. Before opening the packages, READ AND FOLLOW WARNING LABELS ON ALL COMPONENTS.

Intentional misuse by deliberately concentrating and inhaling the contents can be harmful or fatal.

SECTION 9 — PHYSICAL AND CHEMICAL PROPERTIES

PRODUCT WEIGHT	10.14 lb/gal	1215 g/l
SPECIFIC GRAVITY	1.22	
BOILING POINT	174 - 415 °F	78 - 212 °C
MELTING POINT	Not Available	
VOLATILE VOLUME	38%	
EVAPORATION RATE	Slower than ether	
VAPOR DENSITY	Heavier than air	
SOLUBILITY IN WATER	N.A.	

VOLATILE ORGANIC COMPOUNDS (VOC Theoretical - As Packaged)

2.77 lb/gal	332 g/l	Less Water and Federally Exempt Solvents
2.77 lb/gal	332 g/l	Emitted VOC

SECTION 10 — STABILITY AND REACTIVITY

STABILITY — Stable

CONDITIONS TO AVOID

None known.

INCOMPATIBILITY

None known.

HAZARDOUS DECOMPOSITION PRODUCTS

By fire: Carbon Dioxide, Carbon Monoxide

HAZARDOUS POLYMERIZATION

Will not occur

SECTION 11 — TOXICOLOGICAL INFORMATION

CHRONIC HEALTH HAZARDS

Methyl Ethyl Ketone may increase the nervous system effects of other solvents.

Reports have associated repeated and prolonged overexposure to solvents with permanent brain and nervous system damage.

Ethylbenzene is classified by IARC as possibly carcinogenic to humans (2B) based on inadequate evidence in humans and sufficient evidence in laboratory animals. Lifetime inhalation exposure of rats and mice to high ethylbenzene concentrations resulted in increases in

certain types of cancer, including kidney tumors in rats and lung and liver tumors in mice. These effects were not observed in animals exposed to lower concentrations. There is no evidence that ethylbenzene causes cancer in humans.

Crystalline Silica (Quartz, Cristobalite) is listed by IARC and NTP. Long term exposure to high levels of silica dust, which can occur only when sanding or abrading the dry film, may cause lung damage (silicosis) and possibly cancer.

TOXICOLOGY DATA

CAS No.	Ingredient Name			
100-41-4	**Ethylbenzene**			
		LC50 RAT	4HR	Not Available
		LD50 RAT		3500 mg/kg
1330-20-7	**Xylene**			
		LC50 RAT	4HR	5000 ppm
		LD50 RAT		4300 mg/kg
64742-94-5	**Medium Aromatic Hydrocarbons**			
		LC50 RAT	4HR	Not Available
		LD50 RAT		Not Available
91-20-3	**Naphthalene**			
		LC50 RAT	4HR	Not Available
		LD50 RAT		Not Available
78-93-3	**Methyl Ethyl Ketone**			
		LC50 RAT	4HR	Not Available
		LD50 RAT		2740 mg/kg
123-86-4	**n-Butyl Acetate**			
		LC50 RAT	4HR	2000 ppm
		LD50 RAT		13100 mg/kg
108-65-6	**1-Methoxy-2-Propanol Acetate**			
		LC50 RAT	4HR	Not Available
		LD50 RAT		8500 mg/kg
14808-60-7	**Quartz**			
		LC50 RAT	4HR	Not Available
		LD50 RAT		Not Available
112926-00-8	**Amorphous Precipitated Silica**			
		LC50 RAT	4HR	Not Available
		LD50 RAT		4999. mg/kg

SECTION 12 — ECOLOGICAL INFORMATION

ECOTOXICOLOGICAL INFORMATION

No data available.

SECTION 13 — DISPOSAL CONSIDERATIONS

WASTE DISPOSAL METHOD

Waste from this product may be hazardous as defined under the Resource Conservation and Recovery Act (RCRA) 40 CFR 261.

Waste must be tested for ignitability to determine the applicable EPA hazardous waste numbers.

Incinerate in approved facility. Do not incinerate closed container. Dispose of in accordance with Federal, State/Provincial, and Local regulations regarding pollution.

SECTION 14 — TRANSPORT INFORMATION

Multi-modal shipping descriptions are provided for informational purposes and do not consider container sizes. The presence of a shipping description for a particular mode of transport (ocean, air, etc.), does not indicate that the product is packaged suitably for that mode of transport. All packaging must be reviewed for suitability prior to shipment, and compliance with the applicable regulations is the sole responsibility of the person offering the product for transport.

US Ground (DOT)

5 Liters (1.3 Gallons) and Less may be Classed as CONSUMER COMMODITY, ORM-D

Larger Containers are Regulated as:

UN1263, PAINT, 3, PG II, (ERG#128)

DOT (Dept of Transportation) Hazardous Substances & Reportable Quantities

Xylenes (isomers and mixture) 100 lb RQ

Bulk Containers may be Shipped as (check reportable quantities):

UN1263, PAINT, 3, PG II, (ERG#128)

Canada (TDG)

UN1263, PAINT, CLASS 3, PG II, (ERG#128)

IMO

5 Liters (1.3 Gallons) and Less may be Shipped as Limited Quantity.

UN1263, PAINT, CLASS 3, PG II, (13 C c.c.), EmS F-E, S-E, ADR (D/E)

IATA/ICAO

UN1263, PAINT, 3, PG II

SECTION 15 — REGULATORY INFORMATION

SARA 313 *(40 CFR 372.65C)* SUPPLIER NOTIFICATION

CAS No.	CHEMICAL/COMPOUND	% by WT	% Element
100-41-4	Ethylbenzene	0.1	
1330-20-7	Xylene	1	
91-20-3	Naphthalene	0.1	

CALIFORNIA PROPOSITION 65

WARNING: This product contains chemicals known to the State of California to cause cancer and birth defects or other reproductive harm.

TSCA CERTIFICATION

All chemicals in this product are listed, or are exempt from listing, on the TSCA Inventory.

SECTION 16 — OTHER INFORMATION

This product has been classified in accordance with the hazard criteria of the Canadian Controlled Products Regulations (CPR) and the MSDS contains all of the information required by the CPR.

The above information pertains to this product as currently formulated, and is based on the information available at this time. Addition of reducers or other additives to this product may substantially alter the composition and hazards of the product. Since conditions of use are outside our control, we make no warranties, express or implied, and assume no liability in connection with any use of this information.

SHER-KEM™ ENAMEL COLOR SELECTOR

for fabricators and job shops

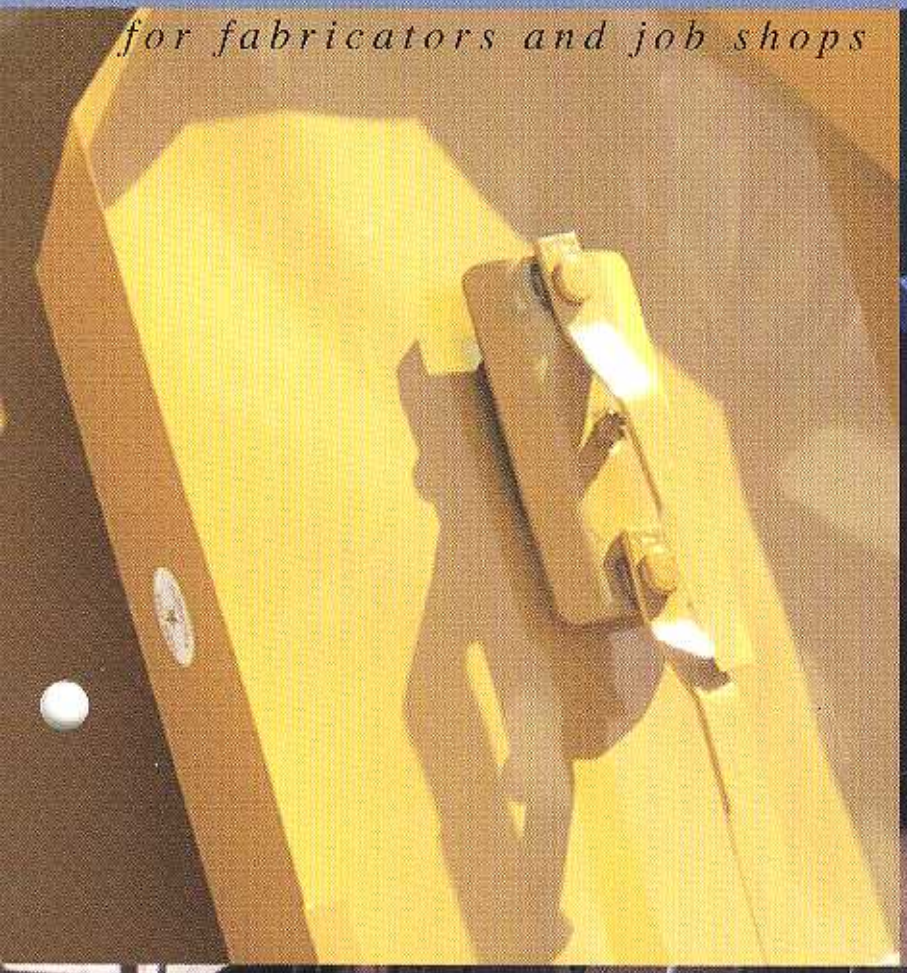

SHERWIN WILLIAMS

Heavy Equipment Colors

Extra White*	SW 7401
Stardust White	SW 7409
Implement Yellow*	SW 7402
•Equipment Agricultural Yellow	SW 7410
•Green Tractor	SW 7415
•Equipment Green	SW 7420
Equipment Yellow*	SW 7403
Equipment Tan	SW 7411
Motor Blue	SW 7416
Blue Ribbon	SW 7421
Implement Orange*	SW 7404
•Heavy Equipment Orange	SW 7412
•Allen Red	SW 7417
•Machinery Red	SW 7422
International Red*	SW 7405
•Power Orange	SW 7413
Frame Grey	SW 7418
Industrial Charcoal	SW 7423
Enviro Green*	SW 7406
Architectural Bronze	SW 7414
Dark Grey	SW 7419
Dull Black	SW 7424
Equipment Blue*	SW 7407
Raven Black*	SW 7408

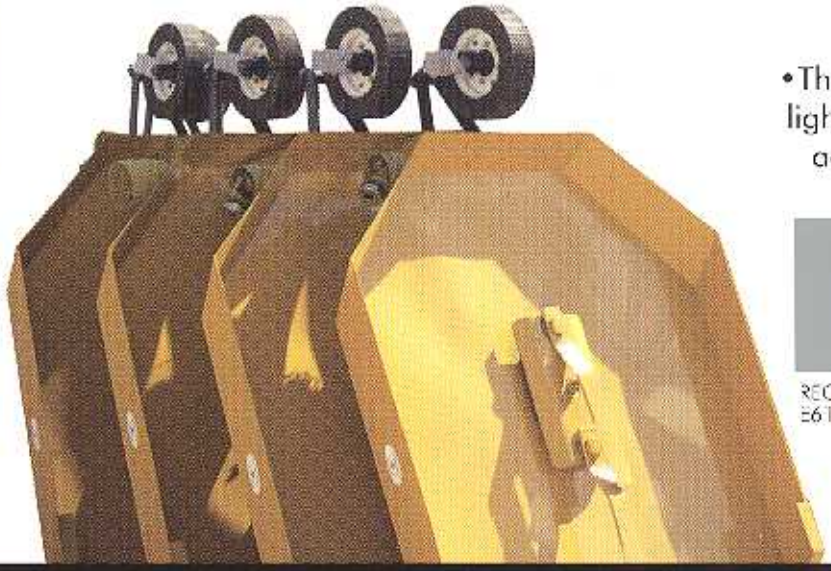

•These colors require a light colored primer to achieve final color.

RECOMMENDED PRIMER
E61A400

*Package Colors

These colors approximate as closely as possible the actual paint colors.

General Metal Colors

Scuba White SW 7425	Bone White SW 7433	White Metal SW 7441	Machinery White SW 7447
HD Beige SW 7426	Beach Sand SW 7434	Surrey Beige SW 7442	Container Tan SW 7448
•Ultra Orange SW 7427	•General Orange SW 7435	Red Metal SW 7443	Driftwood SW 7449
Outdoor Green SW 7428	Rock Green SW 7436	Fence Green SW 7444	Pastel Blue SW 7450
•Bright Blue SW 7429	Legal Blue SW 7437	Electric Blue SW 7445	Navy Blue SW 7451
ANSI 70 Grey SW 7430	Overnight Grey SW 7438	New Rim Grey SW 7446	Wheel Grey SW 7452
ANSI 61 Grey SW 7431	All Grey SW 7439		
ANSI 49 Grey SW 7432	Wheel Black SW 7440		

At Sherwin-Williams, our combination of products and services makes it easy and fast to get the best metal
We supply spray equipment and parts, metal prep cleaners, primers and topcoat finishes that protect
enhance your products.....adding lasting value to what you finish.

METAL CONTAINER COLORS

Packer Beige SW 7453

Clay SW 7459

•Federal Yellow SW 7454

•Container Orange SW 7460

Container Red SW 7455

Burgundy SW 7461

Container Brown SW 7456

Packer Brown SW 7462

WM Green SW 7457

Meridian Green SW 7463

Forest Green SW 7458

Container Green SW 7464

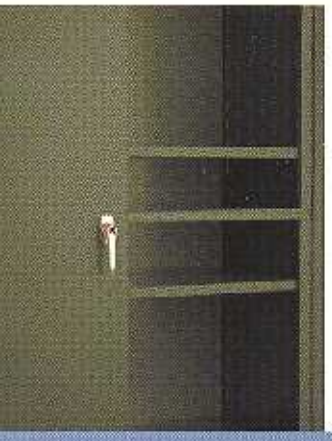

BFI Blue SW 7465

Warm White Gloss SW 7466

Container Grey SW 7467

Gloss Black SW 7468

The colors featured in this selector provide a full range of clean, brilliant colors for HEAVY EQUIPMENT, GENERAL METALS, and METAL CONTAINER market applications. They represent the latest OEM (original equipment manufacturer) colors allowing you to select the color that's right for a specific job and customer. Custom colors can also be blended and matched at your local Sherwin-Williams store using the latest Sher Color™ computerized color matching technology. Sher-Color gives you the fastest most accurate color matching. Ask for **SHER-KEM™** HIGH GLOSS METAL FINISHING ENAMEL in one of our new factory applied colors.

finishing solutions.
endure and

SHER-KEM™ Enamel Color Selector.
Offering colors that brand your products as the very best.

SHER-KEM HIGH GLOSS METAL FINISHING ENAMEL is designed as a premium topcoat that provides a long lasting bright finish. It's a super smooth finish with superior color brilliance and distinctness of image, creating a mirror-like quality. It stands up to harsh environments with superior resistance to ultraviolet light exposure, petroleum based fuels, and surface abrasion. This factory applied finish is now available at your local Sherwin-Williams store, in the COLORS YOU WANT.

SHER-KEM™ *HIGH GLOSS METAL FINISHING ENAMEL*

Sherwin-Williams' comprehensive line of proven production finishes are backed by the largest distribution system in the industry, expert advice, fast delivery, and computerized color matching.

There's a location near you. For more information about our products and services, contact your local Sherwin-Williams store or representative.

Call 1 800 521 5979 to have a rep contact you.

www.sherwin-williams.com

SHERWIN WILLIAMS.

SHER-KEM™ ENAMEL COLOR SELECTOR

for fabricators and job shops

www.sherwin-williams.com

2005807

©2006 The Sherwin-Williams Company

BMP

BROWN-MINNEAPOLIS TANK

ENGINEERS - FABRICATORS - CONSTRUCTORS

DAILY COATING INSPECTION FORM

DATE: 4/30/15 M T W (R) F S SU | PG ___ OF ___

PROJECT / JOB #: 30883 Tank #1

LOCATION / CUSTOMER: Shop 1

DESCRIPTION OF WORK AREA	HOLD POINT INSPECTIONS PREFORMED
Blast interior Sp-10	[✓] WEATHER AND SITE CONDITIONS
	[✓] PRE SURFACE PREP / CONDITION & CLEANLINESS
	[✓] SURFACE PREPARATION MONITORING
	[✓] POST SURFACE PREP CLEANLINESS & PROFILE
	[✓] APPLICATION MONITORING / WFT
	[ ] POST APPLICAITON
	[ ] POST CURE DFT & INTERIOR HOLIDAY TEST
	[✓] CORRECTIVE ACTION AND FINAL INSPECTION

SURFACE CONDITIONS

[✓] NEW STEEL [ ] OLD STEEL [ ] GALV. STEEL [ ] MAINT.

[✓] SALT CONTAMINATION: CL FE

DEGREE OF CORROSION: Mill Scale

[ ] PITS [ ] SHARP EDGES [ ] RUNS/SAGS [ ] MOISTURE [ ] OIL

PAINTED SURFACE CONDITIONS:

[ ] DRY TOUCH [ ] HANDLE [ ] RECOAT

[ ] DRY OVERSPRAY [ ] PINHOLES [ ] HOLIDAYS

[ ] OTHER:

AMBIENT CONDITIONS

TIME	10:15						
DRY BULB, F	61 o	o	o	o	o	o	
WET BULB, F	58 o	o	o	o	o	o	
% HUMIDITY	21 %	%	%	%	%	%	
SURFACE MIN/MAX							
WIND DIR/SPEED	3 mph						

WEATHER CONDITIONS: Clear - Good

SURFACE PREPARATION

START TIME: FINISH TIME: EST. SF

[ ] SOLVENT CLEAN [ ] HAND TOOL [ ] POWER TOOL

[ ] HP WASH PSI [ ] OTHER:

[✓] ABRASIVE BLAST [✓] ABRASIVE TYPE Copper [ ] SAMPLE

[✓] BLAST HOSE SIZE 2" [✓] NOZZLE SIZE / PSI #8

[✓] AIR SUPPLY CFM 600 [✓] AIR SUPPLY CLEANLINESS

[✓] WATER/OIL TRAP CHECK [✓] EQUIPMENT CONDITION CHECK

SURFACE CLEANLINESS & PROFILE MEASURMENT

SPECIFIED SURFACE PREPARATION: SSPC SP-

ACTUAL SURFACE PREPARATION: SSPC SP- ____

PROFILE CHECK: ____ [ ] DISC [ ] TAPE [ ] GAUGE

[ ] SPECIFIED ____ mils [ ] ACTUAL ____ mils

[ ] Banana Gage BMR ____ mils

DRY FILM THICKNESS MEASURMENT

Gage Type / Model: ____ Serial # ____

[ ] Calibration Verified # DFT Readings ____ Est. SF ____

Min. ____ mils Max ____ mils Ave. ____ mils

Additional Notes:

APPLICATION

START TIME: FINISH TIME: EST. SF

[ ] PRIMER [ ] INTERMEDIATE [ ] TOPCOAT [ ] TOUCHUP

Generic Type:	Qty Mixed:
Manuf:	Mix Ratio:
Prod. Name:	Mix Method:
Prod. #:	Strain/Screen [ ]
Color:	Material Temp. ___ oF
Kit Size / Condition:	Sweat Time ___ min.
Shelf Life:	Pot Life ___ min.
Batch Numbers	Thinner #:
(A)	Qty. Added:
(B)	% Volume:
(C)	Spec. WFT: ___ mils
Thinner	Actual WFT: ___ mils

[ ] Airless [ ] Conventional [ ] Brush [ ] Roller [ ] Other

Pump / Pot	Hose Dia.	[ ] Air Check
Ratio / Size	Hose Lng.	[ ] SEP / Trap
GPM / CFM	Spray Gun	[ ] Filter
PSI:	Tip Sz.	[ ] Agitator

Inspector Signature

Testex Tapes

33 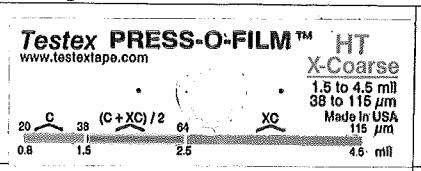		

BROWN-MINNEAPOLIS TANK
ENGINEERS - FABRICATORS - CONSTRUCTORS

DAILY COATING INSPECTION FORM

DATE: 5/1/15 M T W R F S SU | PG ___ OF ___

PROJECT / JOB #: 30883 Tank #2

LOCATION / CUSTOMER: Shop /

DESCRIPTION OF WORK AREA	HOLD POINT INSPECTIONS PREFORMED
Blast interior SP-10	[✓] WEATHER AND SITE CONDITIONS
	[✓] PRE SURFACE PREP / CONDITION & CLEANLINESS
	[✓] SURFACE PREPARATION MONITORING
	[✓] POST SURFACE PREP CLEANLINESS & PROFILE
	[✓] APPLICATION MONITORING / WFT
	[ ] POST APPLICAITON
	[ ] POST CURE DFT & INTERIOR HOLIDAY TEST
	[✓] CORRECTIVE ACTION AND FINAL INSPECTION

SURFACE CONDITIONS

[✓] NEW STEEL [ ] OLD STEEL [ ] GALV. STEEL [ ] MAINT.
[✓] SALT CONTAMINATION: CL FE
DEGREE OF CORROSION: MillScale
[ ] PITS [ ] SHARP EDGES [ ] RUNS/SAGS [ ] MOISTURE [ ] OIL
PAINTED SURFACE CONDITIONS:
[ ] DRY TOUCH [ ] HANDLE [ ] RECOAT
[ ] DRY OVERSPRAY [ ] PINHOLES [ ] HOLIDAYS
[ ] OTHER:

AMBIENT CONDITIONS

TIME	1:07						
DRY BULB, F	81 o	o	o	o	o	o	
WET BULB, F	79 o	o	o	o	o	o	
% HUMIDITY	13 %	%	%	%	%	%	
SURFACE MIN/MAX							
WIND DIR/SPEED	5mph						

WEATHER CONDITIONS: Clear - Good

SURFACE PREPARATION

START TIME: ___ FINISH TIME: ___ EST. SF ___
[ ] SOLVENT CLEAN [ ] HAND TOOL [ ] POWER TOOL
[ ] HP WASH ___ PSI [ ] OTHER:
[✓] ABRASIVE BLAST [✓] ABRASIVE TYPE Copper [ ] SAMPLE
[✓] BLAST HOSE SIZE 3" [✓] NOZZLE SIZE / PSI #8
[✓] AIR SUPPLY CFM 600 [✓] AIR SUPPLY CLEANLINESS
[✓] WATER/OIL TRAP CHECK [✓] EQUIPMENT CONDITION CHECK

SURFACE CLEANLINESS & PROFILE MEASURMENT

SPECIFIED SURFACE PREPARATION: SSPC SP-
ACTUAL SURFACE PREPARATION: SSPC SP- ___
PROFILE CHECK: ___ [ ] DISC [ ] TAPE [ ] GAUGE
[ ] SPECIFIED ___ mils [ ] ACTUAL ___ mils
[ ] Banana Gage BMR ___ mils

DRY FILM THICKNESS MEASURMENT

Gage Type / Model: ___ Serial # ___
[ ] Calibration Verified # DFT Readings ___ Est. SF ___
Min. ___ mils Max ___ mils Ave. ___ mils
Additional Notes:

APPLICATION

START TIME: ___ FINISH TIME: ___ EST. SF ___
[ ] PRIMER [ ] INTERMEDIATE [ ] TOPCOAT [ ] TOUCHUP

Generic Type:	Qty Mixed:
Manuf:	Mix Ratio:
Prod. Name:	Mix Method:
Prod. #:	Strain/Screen [ ]
Color:	Material Temp. ___ oF
Kit Size / Condition:	Sweat Time ___ min.
Shelf Life:	Pot Life ___ min.
Batch Numbers	Thinner #:
(A)	Qty. Added:
(B)	% Volume:
(C)	Spec. WFT: ___ mils
Thinner	Actual WFT: ___ mils

[ ] Airless [ ] Conventional [ ] Brush [ ] Roller [ ] Other

Pump / Pot	Hose Dia.	[ ] Air Check
Ratio / Size	Hose Lng.	[ ] SEP / Trap
GPM / CFM	Spray Gun	[ ] Filter
PSI:	Tip Sz.	[ ] Agitator

Inspector Signature

Testex Tapes

3.5 Testex PRESS-O-FILM™ HT X-Coarse www.testextape.com 1.5 to 4.5 mil 38 to 115 µm Made in USA (C+XC)/2 C XC 20 38 64 115 µm 0.8 1.5 2.5 4.5 mil		

BMP

BROWN-MINNEAPOLIS TANK

ENGINEERS - FABRICATORS - CONSTRUCTORS

DAILY COATING INSPECTION FORM

DATE: 5/6/15 M T (W) R F S SU | PG ___ OF ___

PROJECT / JOB #: 30883 - 1 - 2

LOCATION / CUSTOMER: Shop / Fletcher

DESCRIPTION OF WORK AREA	HOLD POINT INSPECTIONS PREFORMED
Blast exterior SP-6	[✓] WEATHER AND SITE CONDITIONS
Touch up interior exterior too.	[✓] PRE SURFACE PREP / CONDITION & CLEANLINESS
	[✓] SURFACE PREPARATION MONITORING
	[✓] POST SURFACE PREP CLEANLINESS & PROFILE
	[✓] APPLICATION MONITORING / WFT
	[ ] POST APPLICAITON
	[ ] POST CURE DFT & INTERIOR HOLIDAY TEST
	[✓] CORRECTIVE ACTION AND FINAL INSPECTION

SURFACE CONDITIONS

[✓] NEW STEEL [ ] OLD STEEL [ ] GALV. STEEL [ ] MAINT.

[✓] SALT CONTAMINATION: CL ___ FE ___

DEGREE OF CORROSION: Millscale

[ ] PITS [ ] SHARP EDGES [ ] RUNS/SAGS [ ] MOISTURE [ ] OIL

PAINTED SURFACE CONDITIONS:

[ ] DRY TOUCH [ ] HANDLE [ ] RECOAT

[ ] DRY OVERSPRAY [ ] PINHOLES [ ] HOLIDAYS

[ ] OTHER:

AMBIENT CONDITIONS

TIME	10:00						
DRY BULB, F	63 o	o	o	o	o	o	
WET BULB, F	59 o	o	o	o	o	o	
% HUMIDITY	49 %	%	%	%	%	%	
SURFACE MIN/MAX							
WIND DIR/SPEED	12 mph						

WEATHER CONDITIONS: Clear - Good

SURFACE PREPARATION

START TIME: ___ FINISH TIME: ___ EST. SF ___

[ ] SOLVENT CLEAN [ ] HAND TOOL [ ] POWER TOOL

[ ] HP WASH ___ PSI [ ] OTHER:

[✓] ABRASIVE BLAST [✓] ABRASIVE TYPE Copper [ ] SAMPLE

[✓] BLAST HOSE SIZE 2" [✓] NOZZLE SIZE / PSI #8

[✓] AIR SUPPLY CFM 1200 [✓] AIR SUPPLY CLEANLINESS

[✓] WATER/OIL TRAP CHECK [✓] EQUIPMENT CONDITION CHECK

SURFACE CLEANLINESS & PROFILE MEASURMENT

SPECIFIED SURFACE PREPARATION: SSPC SP-

ACTUAL SURFACE PREPARATION: SSPC SP- ___

PROFILE CHECK: ___ [ ] DISC [ ] TAPE [ ] GAUGE

[ ] SPECIFIED ___ mils [ ] ACTUAL ___ mils

[ ] Banana Gage BMR ___ mils

DRY FILM THICKNESS MEASURMENT

Gage Type / Model: ___ Serial # ___

[ ] Calibration Verified # DFT Readings ___ Est. SF ___

Min. ___ mils Max ___ mils Ave. ___ mils

Additional Notes:

APPLICATION

START TIME: ___ FINISH TIME: ___ EST. SF ___

[ ] PRIMER [ ] INTERMEDIATE [ ] TOPCOAT [ ] TOUCHUP

Generic Type:	Qty Mixed:
Manuf:	Mix Ratio:
Prod. Name:	Mix Method:
Prod. #:	Strain/Screen [ ]
Color:	Material Temp. ___ oF
Kit Size / Condition:	Sweat Time ___ min.
Shelf Life:	Pot Life ___ min.
Batch Numbers	Thinner #:
(A)	Qty. Added:
(B)	% Volume:
(C)	Spec. WFT: ___ mils
Thinner	Actual WFT: ___ mils

[ ] Airless [ ] Conventional [ ] Brush [ ] Roller [ ] Other

Pump / Pot	Hose Dia.	[ ] Air Check
Ratio / Size	Hose Lng.	[ ] SEP / Trap
GPM / CFM	Spray Gun	[ ] Filter
PSI:	Tip Sz.	[ ] Agitator

Inspector Signature

Testex Tapes

3.4 Testex PRESS-O-FILM™ www.testextape.com HT X-Coarse 1.5 to 4.5 mil 38 to 115 µm Made in USA 20 C 38 (C+XC)/2 64 XC 115 µm 0.8 1.5 2.5 4.5 mil		

BROWN-MINNEAPOLIS TANK
ENGINEERS - FABRICATORS - CONSTRUCTORS

DAILY COATING INSPECTION FORM

DATE: 5/11/15 (M) T W R F S SU | PG ___ OF ___

PROJECT / JOB #: 30883 Tank #2

LOCATION / CUSTOMER: Shop/Fillaway

DESCRIPTION OF WORK AREA	HOLD POINT INSPECTIONS PREFORMED
Paint	[✓] WEATHER AND SITE CONDITIONS
Spray interior Sherwin Williams	[✓] PRE SURFACE PREP / CONDITION & CLEANLINESS
Macropoxy 646 Pu	[✓] SURFACE PREPARATION MONITORING
	[✓] POST SURFACE PREP CLEANLINESS & PROFILE
Spray Exterior Sherwin Williams	[✓] APPLICATION MONITORING / WFT
Macropoxy 6116	[ ] POST APPLICAITON
	[ ] POST CURE DFT & INTERIOR HOLIDAY TEST
	[✓] CORRECTIVE ACTION AND FINAL INSPECTION

SURFACE CONDITIONS

[ ] NEW STEEL [ ] OLD STEEL [ ] GALV. STEEL [ ] MAINT.
[ ] SALT CONTAMINATION: CL ____ FE ____
DEGREE OF CORROSION:
[ ] PITS [ ] SHARP EDGES [ ] RUNS/SAGS [ ] MOISTURE [ ] OIL
PAINTED SURFACE CONDITIONS:
[ ] DRY TOUCH [ ] HANDLE [ ] RECOAT
[ ] DRY OVERSPRAY [ ] PINHOLES [ ] HOLIDAYS
[ ] OTHER:

AMBIENT CONDITIONS

TIME	1007						
DRY BULB, F	60	o	o	o	o	o	
WET BULB, F	57	o	o	o	o	o	
% HUMIDITY	21	%	%	%	%	%	
SURFACE MIN/MAX	70°						
WIND DIR/SPEED	5mph						

WEATHER CONDITIONS: Clear - Good

SURFACE PREPARATION

START TIME: ____ FINISH TIME: ____ EST. SF ____
[ ] SOLVENT CLEAN [ ] HAND TOOL [ ] POWER TOOL
[ ] HP WASH ____ PSI [ ] OTHER:
[ ] ABRASIVE BLAST [ ] ABRASIVE TYPE ____ [ ] SAMPLE
[ ] BLAST HOSE SIZE ____ [ ] NOZZLE SIZE / PSI ____
[ ] AIR SUPPLY CFM ____ [ ] AIR SUPPLY CLEANLINESS
[ ] WATER/OIL TRAP CHECK [ ] EQUIPMENT CONDITION CHECK

SURFACE CLEANLINESS & PROFILE MEASURMENT

SPECIFIED SURFACE PREPARATION: SSPC SP-
ACTUAL SURFACE PREPARATION: SSPC SP- ____
PROFILE CHECK: ____ [ ] DISC [ ] TAPE [ ] GAUGE
[ ] SPECIFIED ____ mils [ ] ACTUAL ____ mils
[ ] Banana Gage BMR ____ mils

DRY FILM THICKNESS MEASURMENT

Gage Type / Model: ____ Serial # ____
[ ] Calibration Verified # DFT Readings ____ Est. SF ____
Min. ____ mils Max ____ mils Ave. ____ mils
Additional Notes: Sherwin Williams Macropoxy
A) XM0125K5
B) XM2624BK
Reduced #15

APPLICATION

START TIME: ____ FINISH TIME: ____ EST. SF ____
[ ] PRIMER [ ] INTERMEDIATE [ ] TOPCOAT [ ] TOUCHUP

Generic Type:	Qty Mixed:
Manuf: Sherwin Williams	Mix Ratio: 1-1
Prod. Name: Macropoxy	Mix Method: Paddle
Prod. #: 646 Pu	Strain/Screen [✓]
Color: White	Material Temp. ____ oF
Kit Size / Condition: 1 gallon	Sweat Time ____ min.
Shelf Life:	Pot Life ____ min.
Batch Numbers	Thinner #: 15
(A) XM0794UE	Qty. Added:
(B) XM0225LG	% Volume:
(C)	Spec. WFT: ____ mils
Thinner #15	Actual WFT: ____ mils

[✓] Airless [ ] Conventional [ ] Brush [ ] Roller [ ] Other

Pump / Pot	Hose Dia. 1/4	[ ] Air Check
Ratio / Size	Hose Lng. 100	[✓] SEP / Trap
GPM / CFM	Spray Gun	[✓] Filter
PSI: 3000	Tip Sz. 5/21	[ ] Agitator

Inspector Signature

Testex Tapes

BROWN-MINNEAPOLIS TANK
ENGINEERS - FABRICATORS - CONSTRUCTORS

DAILY COATING INSPECTION FORM

DATE: 5/12/15 M T W R F S SU | PG ___ OF ___
PROJECT / JOB #: 30883 Tanks #1, #2
LOCATION / CUSTOMER: Shop / Fliteway

DESCRIPTION OF WORK AREA

Paint
Spray interior Sherwin Williams
Macropoxy 646 PW Light Blue

Spray exterior Sherwin Williams
Acrolon 218 HS white

HOLD POINT INSPECTIONS PREFORMED

- [✓] WEATHER AND SITE CONDITIONS
- [✓] PRE SURFACE PREP / CONDITION & CLEANLINESS
- [✓] SURFACE PREPARATION MONITORING
- [✓] POST SURFACE PREP CLEANLINESS & PROFILE
- [✓] APPLICATION MONITORING / WFT
- [ ] POST APPLICAITON
- [ ] POST CURE DFT & INTERIOR HOLIDAY TEST
- [✓] CORRECTIVE ACTION AND FINAL INSPECTION

SURFACE CONDITIONS

[ ] NEW STEEL [ ] OLD STEEL [ ] GALV. STEEL [ ] MAINT.
[ ] SALT CONTAMINATION: CL ___ FE ___
DEGREE OF CORROSION:
[ ] PITS [ ] SHARP EDGES [ ] RUNS/SAGS [ ] MOISTURE [ ] OIL
PAINTED SURFACE CONDITIONS:
[ ] DRY TOUCH [ ] HANDLE [ ] RECOAT
[ ] DRY OVERSPRAY [ ] PINHOLES [ ] HOLIDAYS
[ ] OTHER:

AMBIENT CONDITIONS

TIME	10:12						
DRY BULB, F	60	o	o	o	o	o	o
WET BULB, F	56	o	o	o	o	o	o
% HUMIDITY	40	%	%	%	%	%	%
SURFACE MIN/MAX	73'						
WIND DIR/SPEED	21mph						

WEATHER CONDITIONS: windy - OK

SURFACE PREPARATION

START TIME: ___ FINISH TIME: ___ EST. SF ___
[ ] SOLVENT CLEAN [ ] HAND TOOL [ ] POWER TOOL
[ ] HP WASH ___ PSI [ ] OTHER:
[ ] ABRASIVE BLAST [ ] ABRASIVE TYPE ___ [ ] SAMPLE
[ ] BLAST HOSE SIZE ___ [ ] NOZZLE SIZE / PSI ___
[ ] AIR SUPPLY CFM ___ [ ] AIR SUPPLY CLEANLINESS
[ ] WATER/OIL TRAP CHECK [ ] EQUIPMENT CONDITION CHECK

SURFACE CLEANLINESS & PROFILE MEASURMENT

SPECIFIED SURFACE PREPARATION: SSPC SP-
ACTUAL SURFACE PREPARATION: SSPC SP- ___
PROFILE CHECK: ___ [ ] DISC [ ] TAPE [ ] GAUGE
[ ] SPECIFIED ___ mils [ ] ACTUAL ___ mils
[ ] Banana Gage BMR ___ mils

DRY FILM THICKNESS MEASURMENT

Gage Type / Model: ___ Serial # ___
[ ] Calibration Verified # DFT Readings ___ Est. SF ___
Min. ___ mils Max ___ mils Ave. ___ mils
Additional Notes: Sherwin Williams Acrolon 218
A) XM0905AN
B) M0575XU
Reducer #15

APPLICATION

START TIME: ___ FINISH TIME: ___ EST. SF ___
[ ] PRIMER [ ] INTERMEDIATE [ ] TOPCOAT [ ] TOUCHUP

Generic Type:	Qty Mixed:
Manuf: Sherwin Williams	Mix Ratio: 1-1
Prod. Name: MacroPoxy	Mix Method: Power
Prod. #: 646 PW	Strain/Screen [✓]
Color: Light Blue	Material Temp. 68 oF
Kit Size / Condition: 10 gallon	Sweat Time ___ min.
Shelf Life:	Pot Life ___ min.
Batch Numbers	Thinner #: 15
(A)	Qty. Added:
(B) M0263413K	% Volume:
(C)	Spec. WFT: ___ mils
Thinner #15	Actual WFT: ___ mils

[✓] Airless [ ] Conventional [ ] Brush [ ] Roller [ ] Other

Pump / Pot	Hose Dia. 1/4	[✓] Air Check
Ratio / Size	Hose Lng. 100	[✓] SEP / Trap
GPM / CFM	Spray Gun	[✓] Filter
PSI: 3000	Tip Sz. 5/19	[ ] Agitator

Inspector Signature

Testex Tapes

BROWN-MINNEAPOLIS TANK
ENGINEERS - FABRICATORS - CONSTRUCTORS

TANK PRESSURE TEST LOG

PROJECT:

JOB NO.: BMT # 30883 - 110

INSPECTOR: TERRY SHUGHART

SUMMARY OF TEST PROCEDURE:

- All tank openings will be plugged or covered.
- Tank will be air tested to 1½ times the maximum design pressure for the tank.
- Soap suds will be applied to all shell, bottom, roof and attachment welds to detect leaks.
- Any weld defects will be repaired and the tank re-tested.
- Air pressure will be released before removal of plugs and covers.

TANK NUMBER	TEST DATE	INITIAL PRESSURE AT START TIME		PRESSURE AT INTERVAL		PASS	FAIL	REPAIRS REQUIRED
		TIME	PSI	TIME	PSI			
TK 1	5-5-15	10 AM	3 PSI	11 AM	3 PSI	✓		NO Repairs
TANK RE-TEST (IF REQUIRED)								
	TEST DATE	INITIAL PRESSURE AT START TIME		PRESSURE AT INTERVAL		PASS	FAIL	

COMMENTS: TESTED RE PADS @ 15 PSI
SOAP TEST

8301 Broadway Blvd. SE, Albuquerque, NM 87105 • (505) 563-4800 • Fax (505) 563-4799

BROWN-MINNEAPOLIS TANK
ENGINEERS - FABRICATORS - CONSTRUCTORS

TANK PRESSURE TEST LOG

PROJECT:

JOB NO.: BMT # 30883 - 116

INSPECTOR: TERRY SHUGHART

SUMMARY OF TEST PROCEDURE:

- All tank openings will be plugged or covered.
- Tank will be air tested to 1½ times the maximum design pressure for the tank.
- Soap suds will be applied to all shell, bottom, roof and attachment welds to detect leaks.
- Any weld defects will be repaired and the tank re-tested.
- Air pressure will be released before removal of plugs and covers.

TANK NUMBER	TEST DATE	INITIAL PRESSURE AT START TIME		PRESSURE AT INTERVAL		PASS	FAIL	REPAIRS REQUIRED
		TIME	PSI	TIME	PSI			
TK 2	5-7-15	8 AM	3 PSI	9:15 AM	3 PSI	✓		NO Repairs
TANK RE-TEST (IF REQUIRED)								
	TEST DATE	INITIAL PRESSURE AT START TIME		PRESSURE AT INTERVAL		PASS	FAIL	

COMMENTS: TESTED REPADS @ 15 PSI
SOAP TEST

8301 Broadway Blvd. SE, Albuquerque, NM 87105 • (505) 563-4800 • Fax (505) 563-4799

Product Data Sheet
September 2014
00813-0100-4001, Rev SA

Rosemount 3051 Pressure Transmitter

With the Rosemount 3051 Pressure Transmitter, you'll gain more control over your plant. You'll be able to reduce product variation and complexity as well as your total cost of ownership by leveraging one device across a number of pressure, level and flow applications. You'll have access to information you can use to diagnose, correct and even prevent issues. And with unparalleled reliability and experience, the Rosemount 3051 is the industry standard that will help you perform at higher levels of efficiency and safety so you can remain globally competitive.

ROSEMOUNT

EMERSON.
Process Management

Setting the Standard for Pressure Measurement

Proven best-in-class performance, reliability and safety

- Over 7 million installed
- Reference accuracy 0.04% of span
- Installed total performance of 0.14% of span
- 10-year stability of 0.2% of URL
- SIL2/3 certified (IEC 61508)

Maximize installation and application flexibility with the coplanar platform

- Improve reliability and performance with integrated DP Flowmeters, DP Level solutions and integral manifolds
- Easy installation with all solutions fully assembled, leak-tested and calibrated
- Meet your application needs with an unsurpassed offering

Advanced functionality

Power advisory diagnostics

- Detect on-scale failures caused by electrical loop issues before they impact your process operation
- This capability is safety certified for your most critical applications

Local operator interface

- Straightforward menus and built-in configuration buttons allow you commission the device in less than a minute
- Configure in hazardous-area locations without removing the transmitter cover using external buttons

Contents

Rosemount 3051C Coplanar™ Pressure Transmitter 4
Rosemount 3051T In-Line Pressure Transmitter 11
Rosemount 3051CF Flowmeter Selection Guide 17
Rosemount 3051CFA Annubar Flowmeter 18
Rosemount 3051CFC Compact Flowmeter 26
Rosemount 3051CFP Integral Orifice Flowmeter 32
Rosemount 3051L Level Transmitter 38
Specifications 45
3051 Product Certifications 56
Pipe I.D. Range Codes 64
Rosemount 3051 Dimensional Drawings 66
Options 80

Industry leading capabilities extended to IEC 62591 (*Wireless*HART®)

- Cost effectively implement wireless on the industry's most proven platform
- Optimize safety with the industry's only intrinsically safe power module
- Eliminate wiring design and construction complexities to lower costs by 40-60%
- Quickly deploy new pressure, level and flow measurements in 70% less time

Innovative, integrated DP Flowmeters

- Fully assembled, configured, and leak tested for out-of-the-box installation
- Reduce straight pipe requirements, lower permanent pressure loss and achieve accurate measurement in small line sizes
- Up to 1.65% volumetric flow accuracy at 8:1 turndown

Proven, reliable, and innovative DP Level Technologies

- Connect to virtually any process with a comprehensive offering of process connections, fill fluids, direct mount or capillary connections and materials
- Quantify and optimize total system performance with QZ option
- Operate at higher temperature and in vacuum applications
- Optimize level measurement with cost efficient Rosemount Tuned-System™ Assemblies

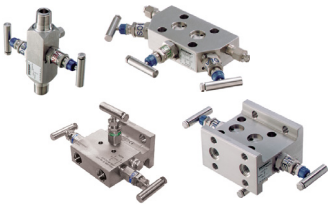

Instrument manifolds – quality, convenient, and easy

- Designed and engineered for optimal performance with Rosemount transmitters
- Save installation time and money with factory assembly
- Offers a variety of styles, materials and configurations

Rosemount 3051L Level Transmitter

3051L Level Transmitter

The Rosemount 3051L Level Transmitter combines the performance and capabilities of Rosemount 3051 Transmitters with the reliability and quality of a direct mount seal in one model number. 3051L Level Transmitters offer a variety of process connections, configurations, and fill fluid types to meet a breadth of level applications. Capabilities of a Rosemount 3051L Level Transmitter include:

- Quantify and optimize total system performance (Option code **QZ**)
- Tuned-System Assembly (Option code **S1**)
- Power Advisory can proactively detect degraded electrical loop integrity issues (Option Code **DA0**)
- Local Operator Interface with straightforward menus and built-in configuration buttons (Option Code **M4**)

See Specifications and options for more details on each configuration. Specification and selection of product materials, options, or components must be made by the purchaser of the equipment. See page 54 for more information on Material Selection.

Additional information:

Specifications: page 45
Certifications: page 56
Dimensional Drawings: page 66

Table 6. Rosemount 3051L Level Transmitter Ordering Information

★ The Standard offering represents the most common options. The starred options (★) should be selected for best delivery. The Expanded offering is subject to additional delivery lead time.

Model	Transmitter type			
3051L[1]	Level Transmitter			
Pressure range				
2	–250 to 250 inH_2O (-621,60 to 621,60 mbar)			★
3	–1000 to 1000 inH_2O (-2,48 to 2,48 bar)			★
4	–300 to 300 psi (-20,68 to 20,68 bar)			★
Transmitter output				
A[2]	4–20 mA with Digital Signal Based on HART Protocol			★
F	FOUNDATION fieldbus Protocol			★
W[3]	PROFIBUS PA Protocol			★
X[4]	Wireless (requires wireless options and engineered polymer housing)			★
M[5]	Low-Power 1-5 Vdc with Digital Signal Based on HART Protocol			
Process connection size, material, extension length (high side)				
Code	**Process connection size**	**Material**	**Extension length**	
G0[6]	2-in./DN 50/A	316L SST	Flush Mount Only	★
H0[6]	2-in./DN 50	Alloy C-276	Flush Mount Only	★
J0	2-in./DN 50	Tantalum	Flush Mount Only	★
A0[6]	3-in./DN 80	316L SST	Flush Mount	★
A2[6]	3-in./DN 80	316L SST	2-in./50 mm	★
A4[6]	3-in./DN 80	316L SST	4-in./100 mm	★

Table 6. Rosemount 3051L Level Transmitter Ordering Information

★ The Standard offering represents the most common options. The starred options (★) should be selected for best delivery. The Expanded offering is subject to additional delivery lead time.

A6[6]	3-in./DN 80	316L SST	6-in./150 mm	★
B0[6]	4-in./DN 100	316L SST	Flush Mount	★
B2[6]	4-in./DN 100	316L SST	2-in./50 mm	★
B4[6]	4-in./DN 100	316L SST	4-in./100 mm	★
B6[6]	4-in./DN 100	316L SST	6-in./150 mm	★
C0[6]	3-in./DN 80	Alloy C-276	Flush Mount	★
C2[6]	3-in./DN 80	Alloy C-276	2-in./50 mm	★
C4[6]	3-in./DN 80	Alloy C-276	4-in./100 mm	★
C6[6]	3-in./DN 80	Alloy C-276	6-in./150 mm	★
D0[6]	4-in./DN 100	Alloy C-276	Flush Mount	★
D2[6]	4-in./DN 100	Alloy C-276	2-in./50 mm	★
D4[6]	4-in./DN 100	Alloy C-276	4-in./100 mm	★
D6[6]	4-in./DN 100	Alloy C-276	6-in./150 mm	★
E0	3-in./DN 80	Tantalum	Flush Mount Only	★
F0	4-in./DN 100	Tantalum	Flush Mount Only	★
Mounting flange size, rating, material (high side)				
	Size	**Rating**	**Material**	
M	2-in.	ANSI/ASME B16.5 Class 150	CS	★
A	3-in.	ANSI/ASME B16.5 Class 150	CS	★
B	4-in.	ANSI/ASME B16.5 Class 150	CS	★
N	2-in.	ANSI/ASME B16.5 Class 300	CS	★
C	3-in.	ANSI/ASME B16.5 Class 300	CS	★
D	4-in.	ANSI/ASME B16.5 Class 300	CS	★
P	2-in.	ANSI/ASME B16.5 Class 600	CS	★
E	3-in.	ANSI/ASME B16.5 Class 600	CS	★
X[6]	2-in.	ANSI/ASME B16.5 Class 150	316 SST	★
F[6]	3-in.	ANSI/ASME B16.5 Class 150	316 SST	★
G[6]	4-in.	ANSI/ASME B16.5 Class 150	316 SST	★
Y[6]	2-in.	ANSI/ASME B16.5 Class 300	316 SST	★
H[6]	3-in.	ANSI/ASME B16.5 Class 300	316 SST	★
J[6]	4-in.	ANSI/ASME B16.5 Class 300	316 SST	★
Z[6]	2-in.	ANSI/ASME B16.5 Class 600	316 SST	★
L[6]	3-in.	ANSI/ASME B16.5 Class 600	316 SST	★
Q	DN 50	PN 10-40 per EN 1092-1	CS	★
R	DN 80	PN 40 per EN 1092-1	CS	★
S	DN 100	PN 40 per EN 1092-1	CS	★
V	DN 100	PN 10/16 per EN 1092-1	CS	★
K[6]	DN 50	PN 10-40 per EN 1092-1	316 SST	★
T[6]	DN 80	PN 40 per EN 1092-1	316 SST	★
U[6]	DN 100	PN 40 per EN 1092-1	316 SST	★

Table 6. Rosemount 3051L Level Transmitter Ordering Information

★ The Standard offering represents the most common options. The starred options (★) should be selected for best delivery. The Expanded offering is subject to additional delivery lead time.

Mounting flange size, rating, material (high side)				
	Size	**Rating**	**Material**	
W[6]	DN 100	PN 10/16 per EN 1092-1	316 SST	★
7[6]	4 in.	ANSI/ASME B16.5 Class 600	316 SST	★
1	N/A	10K per JIS B2238	CS	
2	N/A	20K per JIS B2238	CS	
3	N/A	40K per JIS B2238	CS	
4[6]	N/A	10K per JIS B2238	316 SST	
5[6]	N/A	20K per JIS B2238	316 SST	
6[6]	N/A	40K per JIS B2238	316 SST	

Seal fill fluid (high side)		**Specific gravity**	**Temperature limits [ambient temperature of 70° F (21° C)]**	
D	Silicone 200	0.93	-49 to 401 °F (-45 to 205 °C)	★
F	Silicone 200 for Vacuum Applications	0.93	For use in vacuum applications below 14.7 psia (1 bar-a), refer to vapor pressure curves in Rosemount DP Level Fill Fluid Specification Technical Note (00840-2100-4016).	★
L	Silicone 704	1.07	32 to 401 °F (0 to 205 °C)	★
C	Silicone 704 for Vacuum Applications	1.07	For use in vacuum applications below 14.7 psia (1 bar-a), refer to vapor pressure curves in Rosemount DP Level Fill Fluid Specification Technical Note (00840-2100-4016).	★
R	Silicone 705	1.09	68 to 401 °F (20 to 205 °C)	★
V	Silicone 705 for Vacuum Applications	1.09	For use in vacuum applications below 14.7 psia (1 bar-a), refer to vapor pressure curves in Rosemount DP Level Fill Fluid Specification Technical Note (00840-2100-4016).	★
A	SYLTHERM™ XLT	0.85	-102 to 293 °F (-75 to 145 °C)	★
H	Inert (Halocarbon)	1.85	-49 to 320 °F (-45 to 160 °C)	★
G	Glycerine and Water	1.13	5 to 203 °F (-15 to 95 °C)	★
N	Neobee® M-20	0.92	5 to 401 °F (-15 to 205 °C)	★
P	Propylene Glycol and Water	1.02	5 to 203 F (-15 to 95 °C)	★

Low pressure side					
	Configuration	**Flange adapter**	**Diaphragm material**	**Sensor fill fluid**	
11[6]	Gage	SST	316L SST	Silicone	★
21	Differential	SST	316L SST	Silicone	★
22[6]	Differential	SST	Alloy *C-276*	Silicone	★
2A[7]	Differential	SST	316L SST	Inert (Halocarbon)	★
2B[6][7]	Differential	SST	Alloy *C-276*	Inert (Halocarbon)	★
31[6]	Tuned-System Assembly with Remote Seal	None	316L SST	Silicone (requires Option Code S1)	★

Table 6. Rosemount 3051L Level Transmitter Ordering Information

★ The Standard offering represents the most common options. The starred options (★) should be selected for best delivery. The Expanded offering is subject to additional delivery lead time.

O-ring			
A	Glass-filled PTFE		★
Housing material		**Conduit entry size**	
A	Aluminum	½–14 NPT	★
B	Aluminum	M20 × 1.5	★
J	SST	½–14 NPT	★
K	SST	M20 × 1.5	★
P[8]	Engineered polymer	No conduit entries	★
D[9]	Aluminum	G½	
M[9]	SST	G½	

Wireless options (requires Wireless Output Code X and Engineered Polymer Housing Code P)

Wireless transmit rate, operating frequency, and protocol		
WA3	User Configurable Transmit Rate, 2.4GHz *Wireless*HART	★
Antenna and SmartPower		
WP5	Internal Antenna, Compatible with Green Power Module (I.S. Power Module Sold Separately)	★

HART Revision configuration (requires HART Protocol Output Code A)

HR5[2]	Configured for HART Revision 5	★
HR7[2]	Configured for HART Revision 7	★

Options (include with selected model number)

Extended product warranty		
WR3	3-year limited warranty	★
WR5	5-year limited warranty	★
PlantWeb control functionality		
A01[10]	FOUNDATION fieldbus Control Function Block Suite	★
PlantWeb diagnostic functionality		
DA0[18]	Power Advisory HART Diagnostic	★
D01[10]	FOUNDATION fieldbus Diagnostics Suite	★
Seal assemblies		
S1[11]	Assembled to One Rosemount 1199 Seal	★
Product certifications		
E8	ATEX Flameproof and Dust Certification	★
I1[12]	ATEX Intrinsic Safety and Dust	★
IA	ATEX FISCO Intrinsic Safety; for FOUNDATION fieldbus or PROFIBUS PA protocols only	★
N1	ATEX Type n Certification and Dust	★
K8	ATEX Flameproof, Intrinsic Safety, Type n, Dust (combination of E8, I1 and N1)	★
E4[13]	TIIS Flameproof	★
E5	FM Explosion-proof, Dust Ignition-proof	★
I5[14]	FM Intrinsically Safe, Nonincendive	★
IE	FM FISCO Intrinsically Safe; for FOUNDATION fieldbus or PROFIBUS PA protocols only	★
K5	FM Explosion-proof, Dust Ignition-Proof, Intrinsically Safe, and Division 2	★

Table 6. Rosemount 3051L Level Transmitter Ordering Information

★ The Standard offering represents the most common options. The starred options (★) should be selected for best delivery. The Expanded offering is subject to additional delivery lead time.

C6	CSA Explosion-proof, Dust Ignition-proof, Intrinsically Safe, and Division 2	★
I6[8]	CSA Intrinsic Safety	★
K6	CSA and ATEX Explosion-proof, Intrinsically Safe, and Division 2 (combination of C6, E8, and I1)	★
E7	IECEx Flameproof, Dust Ignition-proof	★
I7	IECEx Intrinsic Safety	★
N7	IECEx Type n Certification	★
K7	IECEx Flameproof, Dust Ignition-proof, Intrinsic Safety, and Type n (combination of I7, N7 and E7)	★
E2	INMETRO Flameproof	★
I2	INMETRO Intrinsic Safety	★
IB	INMETRO FISCO intrinsically safe; for FOUNDATION fieldbus or PROFIBUS PA protocols only	★
K2	INMETRO Flameproof, Intrinsic Safety	★
E3	China Flameproof	★
I3	China Intrinsic Safety	★
N3	China Type n	★
EM	Technical Regulations Customs Union (EAC) Flameproof	★
IM	Technical Regulations Customs Union (EAC) Intrinsic Safety	★
KM	Technical Regulations Customs Union (EAC) Flameproof and Intrinsic Safety	★
KB	FM and CSA Explosion-proof, Dust Ignition Proof, Intrinsically Safe, and Division 2 (combination of K5 and C6)	★
KD	FM, CSA, and ATEX Explosion-proof, Intrinsically Safe (combination of K5, C6, I1, and E8)	★
Shipboard approvals		
SBS[7]	American Bureau of Shipping	★
SBV[7][15]	Bureau Veritas (BV)	
SDN[7]	Det Norske Veritas	
SLL[7][15]	Lloyds Register (LR)	
Bolting material		
L4	Austenitic 316 SST Bolts	★
L5	ASTM A 193, Grade B7M bolts	★
L6	Alloy K-500 Bolts	★
L8	ASTM A 193 Class 2, Grade B8M Bolts	★
Display and interface options		
M4[16]	LCD Display with Local Operator Interface	★
M5	LCD Display	★
Calibration certification		
Q4	Calibration Certificate	★
QP	Calibration Certificate and tamper evident seal	★
QG[17]	Calibration Certificate and GOST Verification Certificate	★
Material traceability certification		
Q8	Material Traceability Certification per EN 10204 3.1	★
Quality certification for safety		
QS[18]	Prior-use certificate of FMEDA data	★
QT[18]	Safety certified to IEC 61508 with certificate of FMEDA	★

Table 6. Rosemount 3051L Level Transmitter Ordering Information

★ The Standard offering represents the most common options. The starred options (★) should be selected for best delivery. The Expanded offering is subject to additional delivery lead time.

Toolkit total system performance reports				
QZ	Seal System Performance Calculation Report			★
Conduit electrical connector				
GE[7]	M12, 4-pin, Male Connector (eurofast)			★
GM[7]	A size Mini, 4-pin, Male Connector (minifast)			★
Configuration buttons				
D4[18]	Analog Zero and Span			★
DZ[19]	Digital Zero Trim			★
Transient protection				
T1[7][20]	Transient Protection			★
Software configuration				
C1[19]	Custom Software Configuration (completed CDS 00806-0100-4007 for wired and 00806-0100-4100 for wireless required with order)			★
Low power output				
C2	0.8-3.2 Vdc Output with Digital Signal Based on HART Protocol (available with Output code M only)			
Alarm levels				
C4[18]	NAMUR alarm and saturation levels, high alarm			★
CN[18]	NAMUR alarm and saturation levels, low alarm			★
CR[18]	Custom alarm and saturation signal levels, high alarm (requires C1 and Configuration Data Sheet)			★
CS[18]	Custom alarm and saturation signal levels, low alarm (requires C1 and Configuration Data Sheet)			★
CT[18]	Rosemount Standard low alarm			★
Conduit plug				
DO[7]	316 SST Conduit Plug			★
Ground screw				
V5[7][21]	External Ground Screw Assembly			★
Lower housing flushing connection options				
	Ring material	**Number**	**Size (NPT)**	
F1	316 SST	1	1/4-18 NPT	★
F2	316 SST	2	1/4-18 NPT	★
F3	Alloy C-276	1	1/4-18 NPT	★
F4	Alloy C-276	2	1/4-18 NPT	★
F7	316 SST	1	1/2-14 NPT	★
F8	316 SST	2	1/2-14 NPT	★
F9	Alloy C-276	1	1/2-14 NPT	★
F0	Alloy C-276	2	1/2-14 NPT	★
Lower housing intermediate gasket material				
S0	No Gasket for lower housing			★
SY[22]	Thermo-Tork TN-9000			★

Table 6. Rosemount 3051L Level Transmitter Ordering Information

★ The Standard offering represents the most common options. The starred options (★) should be selected for best delivery.
The Expanded offering is subject to additional delivery lead time.

NACE certificate		
Q15[23]	Certificate of Compliance to NACE MR0175/ISO 15156 for wetted materials	★
Q25[23]	Certificate of Compliance to NACE MR0103 for wetted materials	★
Typical model number: 3051L 2 A A0 D 21 A A F1		

(1) Select Configuration Buttons (option code D4 or DZ) or Local Operator Interface (option code M4) if local configuration buttons are required.

(2) Option HR5 configures the HART output to HART Revision 5. Option HR7 configures the HART output to HART Revision 7. The device can be field configured to HART Revision 5 or 7 if desired. HART Revision 5 is the default HART output.

(3) Option code M4 - LCD Display with Local Operator Interface required for local addressing and configuration.

(4) Requires wireless options and engineered polymer housing. Available approvals are FM Intrinsically Safe, (option code I5), CSA Intrinsically Safe (option code I6), ATEX Intrinsic Safety (option code I1), IECEx Intrinsic Safety (option code I7) and EAC Intrinsic Safety (option code IM).

(5) Only available with C6, E2, E5, I5, K5, KB and E8 approval. Not available with GE, GM, SBS, DA0, M4, D4, DZ, QT, HR5, HR7, CR, CS, CT.

(6) Materials of Construction comply with metallurgical requirements highlighted within NACE MR0175/ISO 15156 for sour oil field production environments. Environmental limits apply to certain materials. Consult latest standard for details. Selected materials also conform to NACE MR0103 for sour refining environments.

(7) Not available with Wireless output (output code X).

(8) Only available with Wireless output (output code X).

(9) Not available with Product certifications options E8, K8, E5, K5, C6, K6, E7, K7, E2, K2, E3, KB, KD.

(10) Only valid with FOUNDATION fieldbus output (output code F).

(11) "Assemble-to" items are specified separately and require a completed model number.

(12) Dust approval not applicable to output code X. See "IEC 62591 (WirelessHART Protocol)" on page 62 for wireless approvals.

(13) Only available with output codes A - 4-20mA HART, F - FOUNDATION fieldbus, and W - PROFIBUS PA. Also only available with G1/2 housing thread types.

(14) Nonincendive certification not provided with Wireless output option code (X).

(15) Only available with product certifications E7, E8, I1, I7, IA, K7, K8, KD, N1, N7.

(16) Not available with FOUNDATION fieldbus (Output Code F) or Wireless output (Output Code X) or Low Power (Output Code M).

(17) Contact an Emerson Process Management representative for availability.

(18) Only available with HART 4-20 mA output (output code A).

(19) Only available with 4-20 mA HART output (Output Code A) and Wireless output (Output Code X).

(20) The T1 option is not needed with FISCO Product Certifications; transient protection is included in the FISCO product certification codes IA, IB, and IE.

(21) The V5 option is not needed with the T1 option; external ground screw assembly is included with the T1 option.

(22) Gasket provided when lower housing is ordered.

(23) NACE compliant wetted materials are identified by Footnote 6.

Specifications

Performance specifications

This product data sheet covers HART, Wireless, FOUNDATION fieldbus, and PROFIBUS PA protocols unless specified.

Conformance to specification [±3σ (Sigma)]

Technology leadership, advanced manufacturing techniques, and statistical process control ensure specification conformance to at least ±3σ.

Reference accuracy

Stated reference accuracy equations include terminal based linearity, hysteresis, and repeatability. For wireless, FOUNDATION fieldbus and PROFIBUS PA devices, use calibrated range in place of span.

Models	Rosemount 3051and *Wireless*HART
3051C Range 5	+/-0.065% of span For spans less than 10:1, accuracy = $\pm\left[0.015 + 0.005\left(\frac{URL}{Span}\right)\right]$% of Span
Ranges 2-4	± 0.04% of span[1] For spans less than 10:1[2], accuracy = $\pm\left[0.015 + 0.005\left(\frac{URL}{Span}\right)\right]$% of Span
Range 1	± 0.10% of span For spans less than 15:1, accuracy = $\pm\left[0.025 + 0.005\left(\frac{URL}{Span}\right)\right]$% of Span
Range 0 (CD)	± 0.10% of span For spans less than 2:1, accuracy = ± 0.05% of URL
3051CA Ranges 1-4	± 0.04% of span[1] For spans less than 10:1, accuracy = $\pm\left[0.0075\left(\frac{URL}{Span}\right)\right]$% of Span
3051T Ranges 1-4	± 0.04% of span[1] For spans less than 10:1, accuracy = $\pm\left[0.0075\left(\frac{URL}{Span}\right)\right]$% of Span
Range 5	± 0.075% of span For spans less than 10:1, accuracy = $\pm\left[0.0075\left(\frac{URL}{Span}\right)\right]$% of Span
3051L Ranges 2-4	± 0.075% of span For spans less than 10:1, accuracy = $\pm\left[0.025 + 0.005\left(\frac{URL}{Span}\right)\right]$% of Span

(1) For output code W and M, ±0.065% span.

(2) For output code F, for span less than 5:1.

Flow performance - flow reference accuracy[1]

3051CFA Annubar Flowmeter		
Ranges 2-3		±1.80% of Flow Rate at 8:1 flow turndown
3051CFC_A Compact Annubar Flowmeter – Annubar Option A		
Ranges 2-3	Uncalibrated	±2.10% of Flow Rate at 8:1 flow turndown
	Calibrated	±1.80% of Flow Rate at 8:1 flow turndown
3051CFC_C Compact Orifice Flowmeter – Conditioning Option C		
Ranges 2-3	β = 0.4	±1.75% of Flow Rate at 8:1 flow turndown
	β = 0.50, 0.65	±1.95% of Flow Rate at 8:1 flow turndown

Flow performance - flow reference accuracy[1]

3051CFC_P Compact Orifice Flowmeter – orifice type option P[2]		
Ranges 2-3	β = 0.4	±2.00% of Flow Rate at 8:1 flow turndown
	β = 0.65	±2.00% of Flow Rate at 8:1 flow turndown
3051CFP Integral Orifice Flowmeter		
Ranges 2-3	β <0.1	±3.00% of Flow Rate at 8:1 flow turndown
	0.1<β <0.2	±1.95% of Flow Rate at 8:1 flow turndown
	0.2<β <0.6	±1.75% of Flow Rate at 8:1 flow turndown
	0.6<β <0.8	±2.15% of Flow Rate at 8:1 flow turndown

(1) Accuracy over range of use is always application dependent. Range 1 flowmeters may experience an additional uncertainty up to 0.9%. Consult your Emerson Process Management Representative for exact specifications.

(2) Applicable to 2-in. to 12-in. line sizes. For smaller line sizes, see the Rosemount DP Flowmeters and Primary Elements PDS (00813-0100-4485).

Total performance

Total performance is based on combined errors of reference accuracy, ambient temperature effect, and static pressure effect at normal operating conditions (70% of span typical reading, 740 psi (51,02 bar) line pressure).

For ±50 °F (28 °C) temperature changes; 0-100% relative humidity, from 1:1 to 5:1 rangedown

Models	Total performance[1]
3051C Ranges 2-5	± 0.14% of span
3051T Ranges 1-4	± 0.14% of span
3051L Ranges 2-4	Use Instrument Toolkit™ or the QZ option to quantify the total performance of a remote seal assembly under operating conditions.

(1) For output code W, F and M, total performance is ±0.15% of span.

Long term stability

Models	Long term stability
3051C Ranges 2-5	±0.2% of URL for 10 years ±50 °F (28 °C) temperature changes, and up to 1000 psi (68,95 bar) line pressure.
3051CD, 3051CG Low/Draft Range Ranges 0-1	±0.2% of URL for 1 year
3051CA Low Range Range 1	±0.2% of URL for 10 years ±50 °F (28 °C) temperature changes, and up to 1000 psi (68,95 bar) line pressure.
3051T Ranges 1-4	±0.2% of URL for 10 years ±50 °F (28 °C) temperature changes, and up to 1000 psi (68,95 bar) line pressure.

Dynamic performance

	4 - 20 mA HART[1]	FOUNDATION fieldbus and PROFIBUS PA protocols[3]	Typical HART transmitter response time
Total Response Time ($T_d + T_c$)[2]:			
3051C Ranges 2-5 Range 1 Range 0 3051T 3051L	100 ms 255 ms 700 ms 100 ms See Instrument Toolkit	152 ms 307 ms N/A 152 ms See Instrument Toolkit	
Dead Time (Td)	45 ms (nominal)	97 ms	
Update Rate[4]	22 times per second	22 times per second	

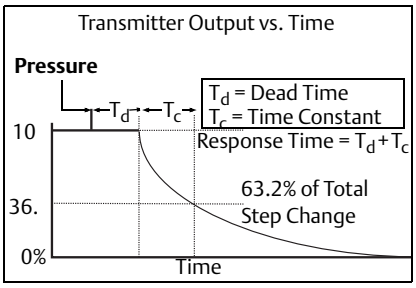

(1) Dead time and update rate apply to all models and ranges; analog output only.

(2) Nominal total response time at 75 °F (24 °C) reference conditions.
(3) Transducer block response time, Analog Input block execution time not included.
(4) Does not apply to wireless (output Code X). See "Wireless (output code X)" on page 52 for wireless update rate.

Line pressure effect per 1000 psi (68,95 bar)

For line pressures above 2000 psi (137,90 bar) and Ranges 4-5, see user manual (Document number 00809-0100-4007 for HART, 00809-0100-4100 for *Wireless*HART, 00809-0100-4774 for FOUNDATION fieldbus, and 00809-0100-4797 for PROFIBUS PA).

Models	Line pressure effect
3051CD, 3051CF	**Zero Error**
Ranges 2-3	±0.05% of URL/1000 psi (68,95 bar) for line pressures from 0 to 2000 psi (0 to 137,90 bar)
Range 1	±0.25% of URL/1000 psi (68,95 bar) for line pressures from 0 to 2000 psi (0 to 137,90 bar)
Range 0	±0.125% of URL/100 psi (6,89 bar) for line pressures from 0 to 750 psi (0 to 51,71 bar)
	Span Error
Ranges 2-3	±0.1% of reading/1000 psi (68,95 bar)
Range 1	±0.4% of reading/1000 psi (68,95 bar)
Range 0	±0.15% of reading/100 psi (68,95 bar)

Ambient temperature effect per 50 °F (28 °C)

Models	Ambient temperature effect
3051C Ranges 2-5	±(0.0125% URL + 0.0625% span) from 1:1 to 5:1 ±(0.025% URL + 0.125% span) from 5:1 to 150:1
Range 1	±(0.1% URL + 0.25% span) from 1:1 to 30:1 ±(0.14% URL + 0.15% span) from 30:1 to 50:1
Range 0	±(0.25% URL + 0.05% span) from 1:1 to 30:1
3051CA Ranges 1-4	±(0.025% URL + 0.125% span) from 1:1 to 30:1 ±(0.035% URL + 0.125% span) from 30:1 to 150:1
3051T Range 2-4	±(0.025% URL + 0.125% span) from 1:1 to 30:1 ±(0.035% URL + 0.125% span) from 30:1 to 150:1
Range 1	±(0.025% URL + 0.125% span) from 1:1 to 10:1 ±(0.05% URL + 0.125% span) from 10:1 to 100:1
Range 5	±(0.1% URL + 0.15% span) from 1:1 to 5:1
3051L	See Instrument Toolkit software.

Mounting position effects

Models	Mounting position effects
3051C	Zero shifts up to ±1.25 inH_2O (3,11 mbar), which can be calibrated out. No span effect.
3051CA, 3051T	Zero shifts up to ±2.5 inH_2O (6,22 mbar), which can be calibrated out. No span effect.
3051L	With liquid level diaphragm in vertical plane, zero shift of up to ±1 inH_2O (2,49 mbar). With diaphragm in horizontal plane, zero shift of up to ±5 inH_2O (12,43 mbar) plus extension length on extended units. All zero shifts can be calibrated out. No span effect.

Vibration effect

Less than ±0.1% of URL when tested per the requirements of IEC60770-1: 1999 field or pipeline with high vibration level (10-60 Hz 0.21 mm displacement peak amplitude / 60-2000 Hz 3g).

Power supply effect

Less than ±0.005% of calibrated span per volt change.

Electromagnetic compatibility (EMC)

Meets all relevant requirements of EN61326-1:2006 and Namur NE-21.[(1)]

(1) NAMUR NE-21 does not apply to wireless output code X.

Transient protection (option code T1)

Tested in accordance with IEEE C62.41.2-2002, Location Category B

6 kV crest (0.5 μs - 100 kHz)
3 kA crest (8 × 20 μs)
6 kV crest (1.2 × 50 μs)

Functional specifications

Range and sensor limits

Table 7. 3051CD, 3051CG, 3051CF, and 3051L Range and Sensor Limits

Range[1]	Minimum span	Range and sensor limits				
			Lower (LRL)			
	3051CD, 3051CG, 3051CF, 3051L[2]	Upper (URL)	3051CD differential 3051CF Flowmeters	3051CG gage[3]	3051L differential	3051L gage[3]
0	0.10 inH_2O (0,24 mbar)	3.00 inH_2O (7,45 mbar)	-3.00 inH_2O (-7,45 mbar)	N/A	N/A	N/A
1	0.50 inH_2O (1,24 mbar)	25.00 inH_2O (62,16 mbar)	-25.00 inH_2O (-62,16 mbar)	-25.00 inH_2O (-62,16 mbar)	N/A	N/A
2	1.67 inH_2O (4,15 mbar)	250.00 inH_2O (621,60 mbar)	-250.00 inH_2O (-621,60 mbar)	-250.00 inH_2O (-621,60 mbar)	-250.00 inH_2O (-621,60 mbar)	-250.00 inH_2O (-621,60 mbar)
3	6.67 inH_2O (16,58 mbar)	1000.00 inH_2O (2,48 bar)	-1000.00 inH_2O (-2,48 bar)	0.50 psia (34,47 mbar)	-1000.00 inH_2O (-2,48 bar)	0.50 psia (34,47 mbar)
4	2.00 psi (137,89 mbar)	300.00 psi (20,68 bar)	-300.00 psi (-20,68 bar)	0.50 psia (34,47 mbar)	-300.00 psi (-20,68 bar)	0.50 psia (34,47 mbar)
5	13.33 psi (919,01 mbar)	2000.00 psi (137,89 bar)	- 2000.00 psi (-137,89 bar)	0.50 psia (34,47 mbar)	N/A	N/A

(1) Range 0 only available with 3051CD. Range 1 only available with 3051CD, 3051CG, or 3051CF. inH_2O referenced at 68 degrees Fahrenheit.

(2) For outputs options W and M, minimum span are: range 1 - 0.50 inH_2O (1,24 mbar), range 2 - 2.50 inH_2O (6,21 mbar), range 3 - 10.00 inH_2O (24,86 mbar), range 4 - 3.00 psi (0,21 bar), range 5 - 20.00 psi (1,38 bar).

(3) Assumes atmospheric pressure of 14.7 psig.

Table 8. 3051CA and 3051T Range and Sensor Limits

Range	3051CA			Range	3051T			
	Minimum span[1]	Range and sensor limits			Minimum span[1]	Range and sensor limits		Lower[2] (LRL) (gage)
		Upper (URL)	Lower (LRL)			Upper (URL)	Lower (LRL) (absolute)	
1	0.30 psi (20,68 mbar)	30 psia (2,06 bar)	0 psia (0 bar)	1	0.30 psi (20,68 mbar)	30.00 psi (2,06 bar)	0 psia (0 bar)	-14.70 psig (-1,01 bar)
2	1.00 psi (68,94 mbar)	150 psia (10,34 bar)	0 psia (0 bar)	2	1.00 psi (68,94 mbar)	150.00 psi (10,34 bar)	0 psia (0 bar)	-14.70 psig (-1,01 bar)
3	5.33 psi (367,49 mbar)	800 psia (55,15 bar)	0 psia (0 bar)	3	5.33 psi (367,49 mbar)	800.00 psi (55,15 bar)	0 psia (0 bar)	-14.70 psig (-1,01 bar)
4	26.67 psi (1,83 bar)	4000 psia (275,79 bar)	0 psia (0 bar)	4	26.67 psi (1,83 bar)	4000.00 psi (275,79 bar)	0 psia (0 bar)	-14.70 psig (-1,01 bar)
5	N/A	N/A	N/A	5	2000.00 psi (137,89 bar)	10000.00 psi (689,47 bar)	0 psia (0 bar)	-14.70 psig (-1,01 bar)

(1) For output options W and M, minimum span are: range 2 - 1.50 psi(0,10 bar), range 3 - 8.00 psi (0,55 bar), range 4 - 40.00 psi (2,75 bar), range 5 for 3051T - 2000.00 psi (137,89 bar)

(2) Assumes atmospheric pressure of 14.7 psig.

Service

Liquid, gas, and vapor applications

4-20 mA HART (output code A)

Power supply

External power supply required. Standard transmitter (4-20mA) operates on 10.5-42.4 Vdc with no load

Load limitations

Maximum loop resistance is determined by the voltage level of the external power supply described by:

Max. Loop Resistance = 43.5 (Power Supply Voltage – 10.5)

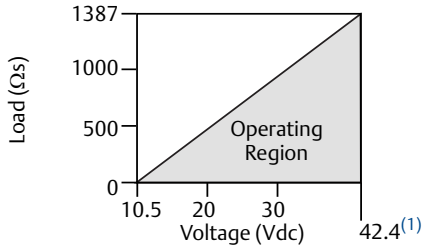

Communication requires a minimum loop resistance of 250 ohms.

(1) For CSA approval, power supply must not exceed 42.4 V.

Indication

Optional two line LCD/LOI Display

Optional configuration buttons

Configuration buttons need to be specified:
Digital Zero trim (option code DZ) changes digital value of the transmitter and is used for performing a sensor zero trim.
Analog Zero Span (option code D4) changes analog value and can be used to rerange the transmitter with an applied pressure.

Output

Two-wire 4-20mA, user selectable for linear or square root output. Digital process variable superimposed on 4-20 mA signal, available to any host that conforms to HART protocol. The 3051 comes with Selectable HART Revisions. Digital communications based on HART Revision 5 (default) or Revision 7 (option code HR7) protocol can be selected. The HART revision can be switched in the field using any HART based configuration tool or the optional local operator interface (M4).

Power advisory diagnostics

Power Advisory Diagnostics pro-actively detect and notify you of degraded electrical loop integrity before it can affect your process operation. Example loop problems that can be detected include water in the terminal compartment, corrosion of terminals, improper grounding, and unstable power supplies.
The Device Dashboard presents the diagnostics in a graphical, task-based interface that provides single-click access to critical process/device information and descriptive graphical troubleshooting.

Local operator interface

The LOI utilizes a 2 button menu with internal and external configuration buttons. Internal buttons are always configured for Local Operator Interface. External Buttons can be configured for either LOI (option code M4), Analog Zero and Span (option code D4) or Digital Zero Trim (option code DZ). See Rosemount 3051 product manual (00809-0100-4007) for LOI configuration menu.

FOUNDATION fieldbus (output code F)

Power supply

External power supply required; transmitters operate on 9.0 to 32.0 V dc transmitter terminal voltage. FISCO transmitters operate on 9.0 to 17.5 V dc.

Current draw

17.5 mA for all configurations (including LCD display option)

Indication

Optional two line LCD display

FOUNDATION fieldbus block execution times

Block	Execution time
Resource	N/A
Sensor and SPM Transducer	N/A
LCD Display	N/A
Analog Input 1, 2	20 milliseconds
PID	25 milliseconds
Input Selector	20 milliseconds
Arithmetic	20 milliseconds
Signal Characterizer	20 milliseconds
Integrator	20 milliseconds
Output Splitter	20 milliseconds
Control Selector	20 milliseconds

FOUNDATION fieldbus parameters

Links	25 (max.)
Virtual Communications Relationships (VCR)	20 (max.)

FOUNDATION fieldbus function blocks (option A01)

Resource block
The resource block contains diagnostic, hardware, and electronics information. There are no linkable inputs or outputs to the Resource Block.

Sensor transducer block
The sensor transducer block contains sensor information and the ability to calibrate the pressure sensor or recall factory calibration.

LCD transducer block
The LCD transducer block is used to configure the LCD display meter.

Analog input block
The analog input (AI) function block processes the measurements from the sensor and makes them available to other function blocks. The output value from the AI block is in engineering units and contains a status indicating the quality of the measurement. The AI Block is widely used for scaling functionality.

Input selector block
The input selector (ISEL) function block can be used to select the first good, hot backup, maximum, minimum, or average of as many as eight input values and place it at the output. The block supports signal status propagation.

Integrator block
The integrator (INT) function block integrates one or two variables over time. The block compares the integrated or accumulated value to pre-trip and trip limits and generates discrete output signals when the limits are reached.
The Integrator Block is used as a totalizer. This block will accept up to two inputs, has six options how to totalize the inputs, and two trip outputs.

Arithmetic block
The arithmetic (ARTH) function block provides the ability to configure a range extension function for a primary input. It can also be used to compute nine different arithmetic functions including flow with partial density compensation, electronic remote seals, hydrostatic tank gaging, ratio control, and others.

Signal characterizer block
The signal characterizer (SGCR) function block characterizes or approximates any function that defines an input/output relationship. The function is defined by configuring as many as twenty X,Y coordinates. The block interpolates an output value for a given input value using the curve defined by the configured coordinates. Two separate analog input signals can be processed simultaneously to give two corresponding separate output values using the same defined curve.

PID block
The PID function block combines all of the necessary logic to perform proportional/integral/derivative (PID) control. The block supports mode control, signal scaling and limiting, feed forward control, override tracking, alarm limit detection, and signal status propagation.

Control selector block
The control selector function block selects one of two or three inputs to be the output. The inputs are normally connected to the outputs of PID or other function blocks. One of the inputs would be considered normal and the other two overrides.

Output splitter block
The output splitter function block provides the capability to drive two control outputs from a single input. It takes the output of one PID or other control block to control two valves or other actuators.

Backup Link Active Scheduler (LAS)

The transmitter can function as a Link Active Scheduler if the current link master device fails or is removed from the segment.

FOUNDATION fieldbus Diagnostics Suite (option code D01)

The 3051C FOUNDATION fieldbus Diagnostics Suite features SPM technology to detect changes in the process, process equipment, or installation conditions (such as plugged impulse lines) of the transmitter. This is done by modeling the process noise signature (using the statistical values of mean and standard deviation) under normal conditions and then comparing the baseline values to current values over time. If a significant change in the current values is detected, the transmitter can generate an alert.

PROFIBUS PA (output code W)

Profile version

3.02

Power supply

External power supply required; transmitters operate on 9.0 to 32.0 V dc transmitter terminal voltage. FISCO transmitters operate on 9.0 to 17.5 V dc.

Current draw

17.5 mA for all configurations (including LCD display option)

Output update rate

Four times per second

Standard function blocks

Analog input (AI block)
The AI function block processes the measurements and makes them available to the host device. The output value from the AI block is in engineering units and contains a status indicating the quality of the measurement.

Physical block
The physical block defines the physical resources of the device including type of memory, hardware, electronics and diagnostic information.

Transducer block
Contains actual sensor measurement data including the sensor diagnostics and the ability to trim the pressure sensor or recall factory defaults.

Indication

Optional 2-line LCD display

Local operator interface

The LOI utilizes a 2 button menu with external configuration buttons.

Wireless (output code X)

Output

IEC 62591 (*Wireless*HART), 2.4 GHz DSSS

Wireless radio (internal antenna, WP5 option)

- Frequency: 2.400 - 2.485 GHz
- Channels: 15
- Modulation: IEEE 802.15.4 compliant DSSS
- Transmission: Maximum of 10 dBm EIRP

Local display

The optional 3-line, 7-digit LCD display can display user-selectable information such as primary variable in engineering units, scaled variable, percent of range, sensor module temperature, and electronics temperature. The display updates based on the wireless update rate.

Digital zero trim

Digital Zero trim (option DZ) is an offset adjustment to compensate for mounting position effects, up to 5% of URL.

Update rate

User selectable 1 sec. to 60 min.

Wireless sensor module for in-line transmitters

The 3051 Wireless transmitter requires the engineered polymer housing to be selected. The standard sensor module will come with aluminum material. If stainless steel is required, the option WSM must be selected.

Power module

Field replaceable, keyed connection eliminates the risk of incorrect installation, Intrinsically Safe Lithium-thionyl chloride Power Module with PBT/PC enclosure. Ten-year life at one minute update rate.[(1)]

(1) Reference conditions are 70 °F (21 °C), and routing data for three additional network devices.

Note: Continuous exposure to ambient temperature limits of -40 °F or 185 °F (-40 °C or 85 °C) may reduce specified life by less than 20 percent.

Low power output

1-5 Vdc HART Low Power (output code M)

Output

Three-wire 1-5 Vdc (option code C2) user-selectable output. Also user selectable for linear or square root output configuration. Digital process variable superimposed on voltage signal, available to any host conforming to the HART protocol. Low-power transmitter operates on 6-12 Vdc with no load.

Power consumption

3.0 mA, 18-36 mW

Minimum load impedance

100 kΩ (V_{out} wiring)

Indication

Optional 5-digit LCD display

Overpressure limits

Rosemount 3051CD/CG/CF

- Range 0: 750 psi (51,71 bar)
- Range 1: 2000 psig (137,90 bar)
- Ranges 2-5: 3626 psig (250,00 bar)
  4500 psig (310,26 bar) for option code P9

Rosemount 3051CA

- Range 1: 750 psia (51,71 bar)
- Range 2: 1500 psia (103,42 bar)
- Range 3: 1600 psia (110,32 bar)
- Range 4: 6000 psia (413,69 bar)

Rosemount 3051TG/TA

- Range 1: 750 psi (51,71 bar)
- Range 2: 1500 psi (103,42 bar)
- Range 3: 1600 psi (110,32 bar)
- Range 4: 6000 psi (413,69 bar)
- Range 5: 15000 psi (1034,21 bar)

For 3051L or Level Flange Option Codes FA, FB, FC, FD, FP, and FQ, limit is 0 psia to the flange rating or sensor rating, whichever is lower.

Table 9. 3051L and Level Flange Rating Limits

Standard	Type	CS rating	SST rating
ANSI/ASME	Class 150	285 psig	275 psig
ANSI/ASME	Class 300	740 psig	720 psig
ANSI/ASME	Class 600	1480 psig	1440 psig
At 100 °F (38 °C), the rating decreases with increasing temperature, per ANSI/ASME B16.5.			
DIN	PN 10-40	40 bar	40 bar
DIN	PN 10/16	16 bar	16 bar
DIN	PN 25/40	40 bar	40 bar
At 248 °F (120 °C), the rating decreases with increasing temperature, per DIN 2401.			

Static pressure limit

Rosemount 3051CD only

Operates within specifications between static line pressures of 0.5 psia and 3626 psig (4500 psig (310, 26 bar) for Option Code P9).

Range 0: 0.5 psia and 750 psig (0,03 bar and 51,71 bar)

Range 1: 0.5 psia and 2000 psig (0,03 bar and 137, 90 bar)

Burst pressure limits

3051C, 3051CF Coplanar or traditional process flange

10081 psig (695,06 bar)

3051T In-Line

Ranges 1-4: 11016 psi (759,53 bar)
Range 5: 26016 psig (1793,74 bar)

Failure mode alarm

HART 4-20 mA (output option code A)

If self-diagnostics detect a sensor or microprocessor failure, the analog signal is driven either high or low to alert the user. High or low failure mode is user-selectable with a jumper/switch on the transmitter. The values to which the transmitter drives its output in failure mode depend on whether it is configured to *standard, NAMUR-compliant,* or custom levels (see Alarm Configuration below). The values for each are as follows:

	High alarm	Low alarm
Default	≥ 21.75 mA	≤ 3.75 mA
NAMUR compliant[(1)]	≥ 22.5 mA	≤ 3.6 mA
Custom levels[(2)]	20.2 - 23.0 mA	3.4 - 3.8 mA

(1) Analog output levels are compliant with NAMUR recommendation NE 43, see option codes C4 or C5.

(2) Low alarm must be 0.1 mA less than low saturation and high alarm must be 0.1 mA greater than high saturation.

Output code M

If self-diagnostics detect a gross transmitter failure, the analog signal will be driven either below 0.94 V or above 5.4 V to alert the user (below 0.75 V or above 4.4 V for Option C2). High or low alarm signal is user-selectable by internal jumper.

Output code F, W, and X

If self-diagnostics detect a gross transmitter failure, that information gets passed as an alert and a status along with the process variable.

Temperature limits

Ambient

-40 to 185 °F (-40 to 85 °C)
With LCD display[(1)(2)]: -40 to 176 °F (-40 to 80 °C)

(1) For the output code M and W, LCD display may not be readable and LCD display updates will be slower at temperatures below -22 °F (-30 °C).

(2) Wireless LCD display may not be readable and LCD display updates will be slower at temperature below -4 °F (-20 °C).

Storage[(1)]

-50 to 230 °F (-46 to 110 °C)
With LCD display: -40 to 185 °F (-40 to 85 °C)
With Wireless Output: -40 °F to 185 °F (-40 °C to 85 °C)

(1) If storage temperature is above 85°C, perform a sensor trim prior to installation.

Process

At atmospheric pressures and above. See Table 10.

Table 10. 3051 Process Temperature Limits

3051CD, 3051CG, 3051CF, 3051CA	
Silicone Fill Sensor[(1)]	
with Coplanar Flange	–40 to 250 °F (–40 to 121 °C)[(2)]
with Traditional Flange	–40 to 300 °F (–40 to 149 °C)[(2)(3)]
with Level Flange	–40 to 300 °F (–40 to 149 °C)[(2)]
with 305 Integral Manifold	–40 to 300 °F (–40 to 149 °C)[(2)]
Inert Fill Sensor[(1)(4)]	–40 to 185 °F (–40 to 85 °C)[(5)(6)]
3051T (process fill fluid)	
Silicone Fill Sensor[(1)]	–40 to 250 °F (–40 to 121 °C)[(2)]
Inert Fill Sensor[(1)]	–22 to 250 °F (–30 to 121 °C)[(2)]
3051L low-side temperature limits	
Silicone Fill Sensor[(1)]	–40 to 250 °F (–40 to 121 °C)[(2)]
Inert Fill Sensor[(1)]	-40 to 185 °F (–40 to 85 °C)[(5)]
3051L high-side temperature limits (process fill fluid)	
SYLTHERM XLT	–102 to 293 °F (–75 to 145 °C)
D.C. Silicone 704®	32 to 401 °F (0 to 205 °C)
D.C. Silicone 200	–49 to 401 °F (–45 to 205 °C)
Inert	–49 to 320 °F (–45 to 160 °C)
Glycerin and Water	5 to 203 °F (–15 to 95 °C)
Neobee M-20	5 to 401 °F (–15 to 205 °C)
Propylene Glycol and Water	5 to 203 °F (–15 to 95 °C)

(1) Process temperatures above 185 °F (85 °C) require derating the ambient limits by a 1.5:1 ratio.

(2) 220 °F (104 °C) limit in vacuum service; 130 °F (54 °C) for pressures below 0.5 psia.

(3) 3051CD0 process temperature limits are –40 to 212 °F (–40 to 100 °C).

(4) Inert fill with traditional flange on Range 0: limits are 32 to 185°F (0 to 85°C).

(5) 160 °F (71 °C) limit in vacuum service.

(6) Not available for 3051CA.

Humidity limits

0–100% relative humidity

Turn-on time

Performance within specifications less than 2.0 seconds (20.0 seconds for PROFIBUS PA and FOUNDATION fieldbus protocols) after power is applied to the transmitter.[(1)]

(1) Does not apply to wireless option code X.

Volumetric displacement

Less than 0.005 in^3 (0,08 cm^3)

Damping

4-20 mA HART

Analog output response to a step input change is user-enterable from 0.0 to 60 seconds for one time constant. This software damping is in addition to sensor module response time.

FOUNDATION fieldbus

Transducer block: User configurable
AI Block: User configurable

PROFIBUS PA

AI Block only: User configurable

Physical specifications

Material selection

Emerson provides a variety of Rosemount products with various product options and configurations including materials of construction that can be expected to perform well in a wide range of applications. The Rosemount product information presented is intended as a guide for the purchaser to make an appropriate selection for the application. It is the purchaser's sole responsibility to make a careful analysis of all process parameters (such as all chemical components, temperature, pressure, flow rate, abrasives, contaminants, etc.), when specifying product materials, options, and components for the particular application. Emerson Process Management is not in a position to evaluate or guarantee the compatibility of the process fluid or other process parameters with the product options, configuration, or materials of construction selected.

Electrical connections

1/2–14 NPT, G1/2, and M20 × 1.5 conduit. The polymer housing (housing code P) has no conduit entries. HART interface connections fixed to terminal block for output code A and to 701P Power Module for Output Code X.

Process connections

Rosemount 3051C

1/4–18 NPT on 2 1/8-in. centers
1/2–14 NPT on 2-, 2 1/8-, or 2 1/4-in. centers

Rosemount 3051L

High pressure side: 2-, 3-, or 4-in., ASME B 16.5 (ANSI) Class 150, 300 or 600 flange; 50, 80 or 100 mm, PN 40 or 10/16 flange
Low pressure side: 1/4–18 NPT on flange 1/2–14 NPT on adapter

Rosemount 3051T

1/2–14 NPT female.
G1/2A DIN 16288 Male (Range 1–4 only)
Autoclave type F-250-C (Pressure relieved 9/16–18 gland thread; 1/4 OD high pressure tube 60° cone; available in SST for Range 5 transmitters only).

Rosemount 3051CF

For 3051CFA, see 00813-0100-4485 Rosemount 485 Annubar
For 3051CFC, see 00813-0100-4485 Rosemount 405 Compact Orifice Plate
For 3051CFP, see 00813-0100-4485 Rosemount 1195 Integral Orifice

Process-wetted parts

Drain/vent valves

316 SST, Alloy C-276, or Alloy 400 material (Alloy 400 not available with 3051L)

Process flanges and adapters

Plated carbon steel
SST: CF-8M (Cast 316 SST) per ASTM A743
Cast C-276: CW-12MW per ASTM A494
Cast Alloy 400: M-30C per ASTM A494

Wetted O-rings

Glass-filled PTFE or Graphite-filled PTFE

Process isolating diaphragms

Isolating diaphragm material	3051CD 3051CG	3051T	3051CA
316L SST (UNS S31603)	•	•	•
Alloy C-276 (UNS N10276)	•	•	•
Alloy 400 (UNS N04400)	•		•
Tantalum (UNS R05440)	•		
Gold-plated Alloy 400	•		•
Gold-plated 316L SST	•		•

Rosemount 3051L process wetted parts

Flanged process connection (transmitter high side)

Process diaphragms, including process gasket surface
316L SST, Alloy C-276, or Tantalum

Extension
CF-3M (Cast version of 316L SST, material per ASTM-A743), or Alloy C-276. Fits schedule 40 and 80 pipe.

Mounting flange
Zinc-cobalt plated CS or SST

Reference process connection (transmitter low side)

Isolating diaphragms
316L SST or Alloy C-276

Reference flange and adapter
CF-8M (Cast version of 316 SST, material per ASTM-A743)

Non-wetted parts

Electronics housing

Low-copper aluminum or CF-8M (Cast version of 316 SST).
Enclosure Type 4X, IP 65, IP 66, IP 68
Housing Material Code P: PBT/PC with NEMA 4X and IP66/67/68

Coplanar sensor module housing

SST: CF-3M (Cast 316L SST)

Bolts

Plated carbon steel per ASTM A449, Type 1
Austenitic 316 SST per ASTM F593
ASTM A193, Grade B7M alloy steel
Alloy K-500

Sensor module fill fluid

Coplanar: silicone or Inert Halocarbon
In-line: silicone or Fluorinert™ FC-43

Process fill fluid (3051L only)

SYLTHERM XLT, D.C. Silicone 704, D.C. Silicone 200, inert, glycerin and water, Neobee M-20, or propylene glycol and water

Paint

Polyurethane

Cover O-rings

Buna-N
Silicone (for wireless option code X)

Power module

Field replaceable, keyed connection eliminates the risk of incorrect installation, Intrinsically Safe Lithium-thionyl chloride Power Module with PBT enclosure.

Shipping weights

Table 11. Transmitter Weights without Options[(1)]

Transmitter	Rosemount 3051 In lb. (kg)	Wireless In lb. (kg)
3051C	6.0 (2,7)	3.9 (1,8)
3051T	3.0 (1,4)	1.9 (0,86)
3051L	Table 12	Table 12

(1) Transmitter weights include the sensor module and housing only (aluminum for Rosemount 3051 and polymer for wireless).

Table 12. 3051L Weights without Options

Flange	Flush lb. (kg)	2-in. Ext. lb. (kg)	4-in. Ext. lb. (kg)	6-in. Ext. lb. (kg)
2-in., 150	12.5 (5,7)	N/A	N/A	N/A
3-in., 150	17.5 (7,9)	19.5 (8,8)	20.5 (9,3)	21.5 (9,7)
4-in., 150	23.5 (10,7)	26.5 (12,0)	28.5 (12,9)	30.5 (13,8)
2-in., 300	17.5 (7,9)	N/A	N/A	N/A
3-in., 300	22.5 (10,2)	24.5 (11,1)	25.5 (11,6)	26.5 (12,0)
4-in., 300	32.5 (14,7)	35.5 (16,1)	37.5 (17,0)	39.5 (17,9)
2-in., 600	15.3 (6,9)	N/A	N/A	N/A
3-in., 600	25.2 (11,4)	27.2 (12,3)	28.2 (12,8)	29.2 (13,2)
DN 50/PN 40	13.8 (6,2)	N/A	N/A	N/A

Table 12. 3051L Weights without Options

Flange	Flush lb. (kg)	2-in. Ext. lb. (kg)	4-in. Ext. lb. (kg)	6-in. Ext. lb. (kg)
DN 80/PN 40	19.5 (8,8)	21.5 (9,7)	22.5 (10,2)	23.5 (10,6)
DN 100/ PN 10/16	17.8 (8,1)	19.8 (9,0)	20.8 (9,5)	21.8 (9,9)
DN 100/ PN 40	23.2 (10,5)	25.2 (11,5)	26.2 (11,9)	27.2 (12,3)

Table 13. Transmitter Option Weights

Code	Option	Add lb. (kg)
J, K, L, M	Stainless Steel Housing (T)	3.9 (1,8)
J, K, L, M	Stainless Steel Housing (C, L, H, P)	3.1 (1,4)
M4/M5	LCD display for wired transmitter	0.5 (0,2)
M5	LCD Display for Wireless Output	0.1 (0,04)
B4	SST Mounting Bracket for Coplanar Flange	1.0 (0,5)
B1, B2, B3	Mounting Bracket for Traditional Flange	2.3 (1,0)
B7, B8, B9	Mounting Bracket for Traditional Flange	2.3 (1,0)
BA, BC	SST Bracket for Traditional Flange	2.3 (1,0)
H2	Traditional Flange	2.4 (1,1)
H3	Traditional Flange	2.7 (1,2)
H4	Traditional Flange	2.6 (1,2)
H7	Traditional Flange	2.5 (1,1)
FC	Level Flange—3 in., 150	10.8 (4,9)
FD	Level Flange—3 in., 300	14.3 (6,5)
FA	Level Flange—2 in., 150	10.7 (4,8)
FB	Level Flange—2 in., 300	14.0 (6,3)
FP	DIN Level Flange, SST, DN 50, PN 40	8.3 (3,8)
FQ	DIN Level Flange, SST, DN 80, PN 40	13.7 (6,2)
WSM	SST Sensor Module	1.0 (0,45)
	Power Module (701PGNKF)	0.4 (0,18)

3051 Product Certifications

European Directive Information

A copy of the EC Declaration of Conformity can be found at the end of the Quick Start Guide. The most recent revision of the EC Declaration of Conformity can be found at www.rosemount.com.

Ordinary Location Certification for FM Approvals

As standard, the transmitter has been examined and tested to determine that the design meets the basic electrical, mechanical, and fire protection requirements by FM Approvals, a nationally recognized test laboratory (NRTL) as accredited by the Federal Occupational Safety and Health Administration (OSHA).

North America

E5 FM Explosionproof (XP) and Dust-Ignitionproof (DIP)
Certificate: 0T2H0.AE

Standards: FM Class 3600 – 1998, FM Class 3615 – 2006, FM Class 3810 – 2005, ANSI/NEMA 250 – 2003

Markings: XP CL I, DIV 1, GP B, C, D; DIP CL II, DIV 1, GP E, F, G; CL III; T5(-50°C ≤ Ta ≤ +85°C); Factory Sealed; Type 4X

I5 FM Intrinsic Safety (IS) and Nonincendive (NI)
Certificate: 1Q4A4.AX

Standards: FM Class 3600 – 2011, FM Class 3610 – 2010, FM Class 3611 – 2004, FM Class 3810 – 2005

Markings: IS CL I, DIV 1, GP A, B, C, D; CL II, DIV 1, GP E, F, G; Class III; DIV 1 when connected per Rosemount drawing 03031-1019; NI CL 1, DIV 2, GP A, B, C, D; T4(-50°C ≤ Ta ≤ +70°C) [HART], T5(-50°C ≤ Ta ≤ +40°C) [HART]; T4(-50°C ≤ Ta ≤ +60°C) [Fieldbus/PROFIBUS]; Type 4x

Special Conditions for Safe Use (X):

1. The Model 3051 transmitter housing contains aluminum and is considered a potential risk of ignition by impact or friction. Care must be taken into account during installation and use to prevent impact and friction.
2. The Model 3051 transmitter with the transient terminal block (Option code T1) will not pass the 500Vrms dielectric strength test and this must be taken into account during installation.

IE FM FISCO
Certificate: 1Q4A4.AX

Standards: FM Class 3600 – 2011, FM Class 3610 – 2010, FM Class 3611 – 2004, FM Class 3810 – 2005

Markings: IS CL I, DIV 1, GP A, B, C, D when connected per Rosemount drawing 03031-1019 (-50°C ≤ Ta ≤ +60°C); Type 4x

Special Conditions for Safe Use (X):

1. The Model 3051 transmitter housing contains aluminum and is considered a potential risk of ignition by impact or friction. Care must be taken into account during installation and use to prevent impact and friction.
2. The Model 3051 transmitter with the transient terminal block (Option code T1) will not pass the 500Vrms dielectric strength test and this must be taken into account during installation.

C6 CSA Explosionproof, Dust-Ignitionproof, Intrinsic Safety and Nonincendive
Certificate: 1053834

Standards: ANSI/ISA 12.27.01-2003, CSA Std. C22.2 No. 30 -M1986, CSA Std. C22.2 No.142-M1987, CSA Std. C22.2. No.157-92, CSA Std. C22.2 No. 213 - M1987, CAN/CSA C22.2 No. 0-10, CSA Std C22.2 No. 25-1966, CAN/CSA-C22.2 No. 94-M91, CAN/CSA-E60079-0-07, CAN/CSA-E60079-1-07

Markings: Explosionproof for Class I, Division 1, Groups B, C and D; Suitable for Class I, Zone 1, Group IIB+H2, T5; Dust-Ignitionproof Class II, Division 1, Groups E, F, G; Class III Division 1; Intrinsically Safe Class I, Division 1 Groups A, B, C, D when connected in accordance with Rosemount drawing 03031-1024, Temperature Code T3C; Suitable for Class I, Zone 0; Class I Division 2 Groups A, B, C and D, T5; Suitable for Class I Zone 2, Group IIC; Type 4X; Factory Sealed; Single Seal (See drawing 03031-1053)

E6 CSA Explosionproof, Dust-Ignitionproof and Division 2
Certificate: 1053834

Standards: ANSI/ISA 12.27.01-2003, CSA Std. C22.2 No. 30 -M1986, CSA Std. C22.2 No.142-M1987, CSA Std. C22.2 No. 213 - M1987, CAN/CSA C22.2 No. 0-10, CSA Std C22.2 No. 25-1966, CAN/CSA-C22.2 No. 94-M91, CAN/CSA-C22.2 No. 157-92, CAN/CSA-E60079-0-07, CAN/CSA-E60079-1-07

Markings: Explosionproof Class I, Division 1, Groups B, C and D; Suitable for Class I, Zone 1, Group IIB+H2, T5; Dust-Ignitionproof for Class II and Class III, Division 1, Groups E, F and G; Class I, Division 2, Groups A, B, C and D; Suitable for Class I Zone 2, Group IIC; Type 4X; Factory Sealed; Single Seal (See drawing 03031-1053)

hazardous location. When used in combustible dust environment, cable entry in accordance with IP66 or higher level should be applied.

4. Obey the warning "Keep tight when the circuit is alive."
5. End users are not permitted to change any internal components.
6. During installation, use and maintenance of this product, observe the following standards:
   GB3836.13-1997 "Electrical apparatus for explosive gas atmospheres Part 13: Repair and overhaul for apparatus used in explosive gas atmospheres"
   GB3836.15-2000 "Electrical apparatus for explosive gas atmospheres Part 15: Electrical installations in hazardous area (other than mines)"
   GB3836.16-2006 "Electrical apparatus for explosive gas atmospheres Part 16: Inspection and maintenance of electrical installation (other than mines)"
   GB50257-1996 "Code for construction and acceptance of electric device for explosion atmospheres and fire hazard electrical equipment installation engineering".
   GB12476.2-2006 "Electrical apparatus for use in the presence of combustible dust Part 1-2: Electrical apparatus protected by enclosures and surface temperature limitation-Selection, installation and maintenance"
   GB15577-2007 "Safety regulations for dust explosion prevention and protection"

I3 China Intrinsic Safety

Certificate: GYJ13.1362X; GYJ101312X [Flowmeters]

Standards: GB3836.1-2010, GB3836.4-2010, GB3836.20-2010, GB12476.1-2000

Markings: Ex ia IIC Ga T4/T5

Special Conditions for Safe Use (X):

1. Symbol "X" is used to denote specific conditions of use:
   a. If the apparatus is fitted with an optional 90V transient suppressor, it is not capable of withstanding the 500V insulation test for 1 minute. This must be taken into account when installing the apparatus.
   b. The enclosure may be made of aluminum alloy and given a protective polyurethane paint finish; however, care should be taken to protect it from impact or abrasion if located in Zone 0.
2. The relation between T code and ambient temperature range is:

Model	T code	Temperature range
HART	T5	-60°C ≤ Ta ≤ +40°C
HART	T4	-60°C ≤ Ta ≤ +70°C
Fieldbus/PROFIBUS/FISCO	T4	-60°C ≤ Ta ≤ +60°C
Flowmeter with 644 Temp Housing	T4	-40°C ≤ Ta ≤ +60°C

3. Intrinsically Safe parameters:
   Input parameters

	HART	Fieldbus/PROFIBUS	FISCO
Voltage U_i	30 V	30 V	17.5 V
Current I_i	200 mA	300 mA	380 mA
Power P_i	0.9 W	1.3 W	5.32 W
Capacitance C_i	0.012 µF	0 µF	<5 nF
Inductance L_i	0 mH	0 mH	<10 µH

   Note 1: FISCO parameters apply to both Group IIC and IIB.
   Note 2: [For Flowmeters] When 644 Temperature Transmitter is used, it should be used with Ex-certified associated apparatus to establish explosion protection system that can be used in explosive gas atmospheres. Wiring and terminals should comply with the instruction manual of both 644 Temperature Transmitter and associated apparatus. The cables between 644 Temperatures Transmitter and associated apparatus should be shielded cables (the cables must have insulated shield). The shielded cable has to be grounded reliably in a non-hazardous area.
4. Transmitters comply with the requirements for FISCO field devices specified in IEC60079-27:2008. For the connection of an intrinsically safe circuit in accordance with FISCO Model, FISCO parameters are listed in the table above.
5. The product should be used with Ex-certified associated apparatus to establish explosion protection system that can be used in explosive gas atmospheres. Wiring and terminals should comply with the instruction manual of the product and associated apparatus.
6. The cables between this product and associated apparatus should be shielded cables (the cables must have insulated shield). The shielded cable has to be grounded reliably in a non-hazardous area.
7. End users are not permitted to change any intern components but to settle the problem in conjunction with the manufacturer to avoid damage to the product.
8. During installation, use and maintenance of this product, observe the following standards:
   GB3836.13-1997 "Electrical apparatus for explosive gas atmospheres Part 13: Repair and overhaul for apparatus used in explosive gas atmospheres"
   GB3836.15-2000 "Electrical apparatus for explosive gas atmospheres Part 15: Electrical installations in hazardous area (other than mines)"
   GB3836.16-2006 "Electrical apparatus for explosive gas atmospheres Part 16: Inspection and maintenance of electrical installation (other than mines)"
   GB50257-1996 "Code for construction and acceptance of electric device for explosion atmospheres and fire hazard electrical equipment installation engineering".
   GB12476.2-2006 "Electrical apparatus for use in the presence of combustible dust Part 1-2: Electrical apparatus protected by enclosures and surface temperature

Thread Adapter Thread Sizes

Male thread	Identification mark
M20 x 1.5 – 6H	M20
1/2 - 14 NPT	1/2 – 14 NPT
3/4 - 14 NPT	3/4 – 14 NPT
Female thread	**Identification mark**
M20 x 1.5 – 6H	M20
1/2 - 14 NPT	1/2 – 14 NPT
PG 13.5	PG 13.5

Special Conditions for Safe Use (X):

1. When the thread adapter or blanking plug is used with an enclosure in type of protection increased safety "e" the entry thread shall be suitably sealed in order to maintain the ingress protection rating (IP) of the enclosure.
2. The blanking plug shall not be used with an adapter.
3. Blanking Plug and Threaded Adapter shall be either NPT or Metric thread forms. G½ and PG 13.5 thread forms are only acceptable for existing (legacy) equipment installations.

Additional Certifications

SBS American Bureau of Shipping (ABS) Type Approval

Certificate: 09-HS446883A-PDA

Intended Use: Measure gauge or absolute pressure of liquid, gas or vapor applications on ABS classed vessels, marine, and offshore installations.

ABS Rules: 2014 Steel Vessels Rules 1-1-4/7.7, 4-8-3/13.1, 1-1-A3, 4-8-3/1.7, 4-8-3/1.11.1

SBV Bureau Veritas (BV) Type Approval

Certificate: 23155/A3 BV

Requirements: Bureau Veritas Rules for the Classification of Steel Ships

Application: Class notations: AUT-UMS, AUT-CCS, AUT-PORT and AUT-IMS; Pressure transmitter type 3051 cannot be installed on diesel engines

SDN Det Norske Veritas (DNV) Type Approval

Certificate: A-13245

Intended Use: Det Norske Veritas' Rules for Classification of Ships, High Speed & Light Craft and Det Norske Veritas' Offshore Standards

Application:

Location classes	
Type	3051
Temperature	D
Humidity	B
Vibration	A
EMC	B
Enclosure	D

SLL Lloyds Register (LR) Type Approval

Certificate: 11/60002

Application: Environmental categories ENV1, ENV2, ENV3 and ENV5

C5 Custody Transfer - Measurement Canada Accuracy Approval

Certificate: AG-0226; AG-0454; AG-0477

IEC 62591 (*Wireless*HART Protocol)

Approved Manufacturing Locations

Rosemount Inc. — Chanhassen, Minnesota USA
Fisher-Rosemount GmbH & Co. — Wessling, Germany
Emerson Process Management Asia Pacific Private Limited — Singapore
Beijing Rosemount Far East Instrument Co., LTD — Beijing, China

European Directive Information

The most recent revision of the EC declaration of conformity can be found at www.rosemount.com.

Telecommunication Compliance

All wireless devices require certification to ensure that they adhere to regulations regarding the use of the RF spectrum. Nearly every country requires this type of product certification. Emerson is working with governmental agencies around the world to supply fully compliant products and remove the risk of violating country directives or laws governing wireless device usage.

FCC and IC

This device complies with Part 15 of the FCC Rules. Operation is subject to the following conditions: This device may not cause harmful interference. This device must accept any interference received, including interference that may cause undesired operation. This device must be installed to ensure a minimum antenna separation distance of 20 cm from all persons.

Ordinary Location Certification for FM

As standard, the transmitter has been examined and tested to determine that the design meets basic electrical, mechanical, and fire protection requirements by FM, a nationally recognized testing laboratory (NRTL) as accredited by the Federal Occupational Safety and Health Administration (OSHA).

North American Certifications

Factory Mutual (FM) approvals

I5 FM Intrinsically Safe
Certificate No: 3046325
Applicable Standards: Class 3600:2011, Class 3610:2010, Class 3810: 2005, ANSI/ISA 60079-0 2009,ANSI/ISA 60079-11:2009
ANSI/NEMA 250:2003, ANSI/IEC 60529:2004
Markings: Intrinsically Safe for Class I, Division I, Groups A, B, C, D
Zone Marking: Class I Zone 0, AEx ia IIC
T4 (-40 °C to 70 °C)
Intrinsically Safe when installed according to Rosemount Drawing 03031-1062
Enclosure Type 4X/IP66/IP68/IP67

Special Conditions for Safe Use (X):

1. The inline pressure sensor may contain more than 10% aluminum and is considered a potential risk of ignition by impact or friction. Care must be taken into account during installation and use to prevent impact and friction.
2. The surface resistivity of the transmitter is greater than one gigaohm. To avoid electrostatic charge build-up, it must not be rubbed or cleaned with solvents or a dry cloth.
3. The Model 3051 Wireless Pressure Transmitter shall only be used with the 701PGNKF Rosemount SmartPower Battery Pack.

CSA - Canadian Standards Association

I6 CSA Intrinsically Safe
Certificate No: 2526009
Applicable Standards: CSA C22.2 No. 0-M91, CSA C22.2 No. 94-M91, CSA C22.2 No. 142-M1987, CSA C22.2 No. 157-92, CSA C22.2 No. 60529-05
Markings: Intrinsically Safe For Class I, Division I, Groups A, B, C, D
T4 (-40 °C to 70 °C)
Intrinsically safe when installed according to Rosemount drawing 03031-1063
Enclosure Type 4X/IP66/IP68

European Certifications

I1 ATEX Intrinsic Safety
Certificate No: Baseefa12ATEX0228X
Applicable Standards: EN60079-11:2012, EN60079-0:2012
Markings: Ex ia IIC T4 Ga (-40 °C ≤ Ta ≤ 70 °C)
Ex II 1G
IP66/68
CE 1180

Special Conditions for Safe Use (X):

1. The plastic enclosure may constitute a potential electrostatic ignition risk and must not be rubbed or cleaned with a dry cloth.

I7 IECEx Intrinsic Safety
Certificate No: IECEx BAS 12.0124X
Applicable Standards: IEC60079-11:2011, IEC60079-0:2011
Markings: Ex ia IIC T4 Ga (-40 °C ≤ Ta ≤ 70 °C)
IP66/68

Special Conditions for Safe Use (X):

1. The plastic enclosure may constitute a potential electrostatic ignition risk and must not be rubbed or cleaned with a dry cloth.
2. The Model 701PGNKF Power Module may be replaced in a hazardous area. The Power Module has a surface resistivity greater than 1GΩ and must be properly installed in the wireless device enclosure. Care must be taken during transportation to and from the point of installation to prevent electrostatic charge build-up.

Pipe I.D. Range Codes

For pipes with an Inner Diameter (I.D.) Range/Pipe Wall Thickness not found in this table or with a line size greater than 12-in. (300 mm), choose option code Z and specify the exact pipe dimensions (I.D. and Pipe Wall Thickness) on the Configuration Data Sheet (see document number 00806-0100-4010). The Emerson Process Management sizing program will determine this code, based on the application piping.

	Line size			I.D. range	Pipe wall thickness		I.D. range code
	Nominal	Max. O.D.	Option code		ANSI pipes	Non-ANSI pipes	
	2-in. (50 mm)	2.625-in. (66.68 mm)	020	1.784 to 1.841-in. (45.31 to 46.76 mm)	0.065 to 0.545-in. (1.7 to 13.8 mm)	0.065 to 0.488-in. (1.7 to 12.4 mm)	A
				1.842 to 1.938-in. (46.79 to 49.23 mm)		0.065 to 0.449-in. (1.7 to 11.4 mm)	B
				1.939 to 2.067-in. (49.25 to 52.50 mm)		0.065 to 0.417-in. (1.7 to 10.6 mm)	C
				2.068 to 2.206-in. (52.53 to 56.03 mm)		0.065 to 0.407-in. (1.7 to 10.3 mm)	D
	2 1/2-in. (63.5 mm)	3.188-in. (80.98 mm)	025	2.207 to 2.322-in. (56.06 to 58.98 mm)	0.083 to 0.563-in. (2.1 to 14.3 mm)	0.083 to 0.448-in. (2.1 to 11.4 mm)	B
				2.323 to 2.469-in. (59.00 to 62.71 mm)		0.083 to 0.417-in. (2.1 to 10.6 mm)	C
				2.470 to 2.598-in. (62.74 to 65.99 mm)		0.083 to 0.435-in. (2.1 to 11.0 mm)	D
				2.599 to 2.647-in. (66.01 to 67.23 mm)		0.083 to 0.515-in. (2.1 to 13.1 mm)	E
	3-in. (80 mm)	3.75-in. (95.25 mm)	030	2.648 to 2.751-in. (67.26 to 69.88 mm)	0.083 to 0.563-in. (2.1 to 14.3 mm)	0.083 to 0.460-in. (2.1 to 11.7 mm)	A
				2.752 to 2.899-in. (69.90 to 73.63 mm)		0.083 to 0.416-in. (2.1 to 10.6 mm)	B
				2.900 to 3.068-in. (73.66 to 77.93 mm)		0.083 to 0.395-in. (2.1 to 10.0 mm)	C
				3.069 to 3.228-in. (77.95 to 81.99 mm)		0.083 to 0.404-in (2.1 to 10.3 mm)	D
	3 1/2-in. (89 mm)	4.25-in. (107.95 mm)	035	3.229 to 3.333-in. (82.02 to 84.66 mm)	0.120 to 0.600-in. (3.0 to 15.2 mm)	0.120 to 0.496-in. (3.0 to 12.6 mm)	B
				3.334 to 3.548-in. (84.68 to 90.12 mm)		0.120 to 0.386-in. (3.0 to 9.8 mm)	C
				3.549 to 3.734-in. (90.14 to 94.84 mm)		0.120 to 0.415-in. (3.0 to 10.5 mm)	D
	4-in. (100 mm)	5.032-in. (127.81 mm)	040	3.735 to 3.825-in. (94.87 to 97.16 mm)	0.120 to 0.600-in. (3.0 to 15.2 mm)	0.120 to 0.510-in. (3.0 to 13.0 mm)	B
				3.826 to 4.026-in. (97.18 to 102.26 mm)		0.120 to 0.400-in. (3.0 to 10.2 mm)	C
				4.027 to 4.237-in. (102.29 to 107.62 mm)		0.120 to 0.390-in. (3.0 to 9.9 mm)	D
				4.238 to 4.437-in. (107.65 to 112.70 mm)		0.120 to 0.401-in. (3.0 to 10.2 mm)	E
	5-in. (125 mm)	6.094-in. (154.79 mm)	050	4.438 to 4.571-in. (112.73 to 116.10 mm)	0.134 to 0.614-in. (3.4 to 15.6 mm)	0.134 to 0.481-in. (3.4 to 12.2 mm)	A
				4.572 to 4.812-in. (116.13 to 122.22 mm)		0.134 to 0.374-in. (3.4 to 9.5 mm)	B
				4.813 to 5.047-in. (122.25 to 128.19 mm)		0.134 to 0.380-in. (3.4 to 9.7 mm)	C
				5.048 to 5.249-in. (128.22 to 133.32 mm)		0.134 to 0.413-in. (3.4 to 10.5 mm)	D

Sensor Size 1	6-in. (150 mm)	6.93-in. (176.02 mm)	060	5.250 to 5.472-in. (133.35 to 138.99 mm)	0.134 to 0.614-in. (3.4 to 15.6 mm)	0.134 to 0.3919-in. (3.4 to 9.9 mm)	A
				5.473 to 5.760-in. (139.01 to 146.30 mm)		0.134 to 0.327-in. (3.4 to 8.3 mm)	B
				5.761 to 6.065-in. (146.33 to 154.05 mm)		0.134 to 0.31-in. (3.4 to 7.9 mm)	C
				6.066 to 6.383-in. (154.08 to 162.13 mm)		0.134 to 0.297-in. (3.4 to 7.5 mm)	D
Sensor Size 2	6-in. (150 mm)	6.93-in. (176.02 mm)	060	5.250 to 5.472-in. (133.35 to 139.99 mm)	0.134 to 1.354-in. (3.4 to 34.4 mm)	0.134 to 1.132-in. (3.4 to 28.7 mm)	A
				5.473 to 5.760-in. (139.01 to 146.30 mm)		0.134 to 1.067-in. (3.4 to 27.1 mm)	B
				5.761 to 6.065-in. (146.33 to 154.05 mm)		0.134 to 1.05-in. (3.4 to 26.7 mm)	C
				6.066 to 6.383-in. (154.08 to 162.13 mm)		0.134 to 1.037-in. (3.4 to 26.3 mm)	D
Sensor Size 1	7-in. (180 mm)	7.93-in. (201.42 mm)	070	6.384 to 6.624-in. (162.15 to 168.25 mm)	0.134 to 0.614-in. (3.4 to 15.6 mm)	0.134 to 0.374-in. (3.4 to 9.5 mm)	B
				6.625 to 7.023-in. (168.28 to 178.38 mm)		0.134 to 0.216-in. (3.4 to 5.5 mm)	C
				7.024 to 7.392-in. (178.41 to 187.76 mm)		0.134 to 0.246-in. (3.4 to 6.2 mm)	D
Sensor Z2	7-in. (180 mm)	7.93-in. (201.42 mm)	070	6.384 to 6.624-in. (162.15 to 168.25 mm)	0.134 to 1.354-in. (3.4 to 34.4 mm)	0.134 to 1.114-in. (3.4 to 28.3 mm)	B
				6.625 to 7.023-in. (168.28 to 178.38 mm)		0.134 to 0.956-in. (3.4 to 24.3 mm)	C
				7.024 to 7.392-in. (178.41 to 187.76 mm)		0.134 to 0.986-in. (3.4 to 25.0 mm)	D
Sensor Size 1	8-in. (200 mm)	9.688-in. (246.08 mm)	080	7.393 to 7.624-in. (187.78 to 193.65 mm)	0.250 to 0.73-in. (6.4 to 18.5 mm)	0.250 to 0.499-in. (6.4 to 12.6 mm)	B
				7.625 to 7.981-in. (193.68 to 202.72 mm)		0.250 to 0.374-in. (6.4 to 9.5 mm)	C
				7.982 to 8.400-in. (202.74 to 213.36 mm)		0.250 to 0.312-in. (6.4 to 7.9 mm)	D
				8.401 to 8.766-in. (213.39 to 222.66 mm)		0.250 to 0.364-in. (6.4 to 9.2 mm)	E
Sensor Size 2	8-in. (200 mm)	9.688-in. (246.08 mm)	080	7.393 to 7.624-in. (187.78 to 193.65 mm)	0.250 to 1.47-in. (6.4 to 37.3 mm)	0.250 to 1.239-in. (6.4 to 31.4 mm)	B
				7.625 to 7.981-in. (193.68 to 202.72 mm)		0.250 to 1.114-in. (6.4 to 28.3 mm)	C
				7.982 to 8.400-in. (202.74 to 213.36 mm)		0.250 to 1.052-in. (6.4 to 26.7 mm)	D
				8.401 to 8.766-in. (213.39 to 222.66 mm)		0.250 to 1.104-in. (6.4 to 28.0 mm)	E
	10-in. (250 mm)	11.75-in. (298.45 mm)	100	8.767 to 9.172-in. (222.68 to 232.97 mm)	0.250 to 1.470-in. (6.4 to 37.3 mm)	0.250 to 1.065-in. (6.4 to 27.1 mm)	A
				9.173 to 9.561-in. (232.99 to 242.85 mm)		0.250 to 1.082-in. (6.4 to 27.5 mm)	B
				9.562 to 10.020-in. (242.87 to 254.51 mm)		0.250 to 1.012-in. (6.4 to 25.7 mm)	C
				10.021 to 10.546-in. (254.53 to 267.87 mm)		0.250 to 0.945-in. (6.4 to 24.0 mm)	D
				10.547 to 10.999-in. (267.89 to 279.37 mm)		0.250 to 1.018-in. (6.4 to 25.9 mm)	E
	12-in. (300 mm)	13.0375-in. (331.15 mm)	120	11.000 to 11.373-in. (279.40 to 288.87 mm)	0.250 to 1.470-in. (6.4 to 37.3 mm)	0.250 to 1.097-in. (6.4 to 27.9 mm)	B
				11.374 to 11.938-in. (288.90 to 303.23 mm)		0.250 to 0.906-in. (6.4 to 23.0 mm)	C
				11.939 to 12.250-in. (303.25 to 311.15 mm)		0.250 to 1.159-in. (6.4 to 29.4 mm)	D

Rosemount 3051 Dimensional Drawings[1]

Figure 1. Rosemount 3051C Exploded View

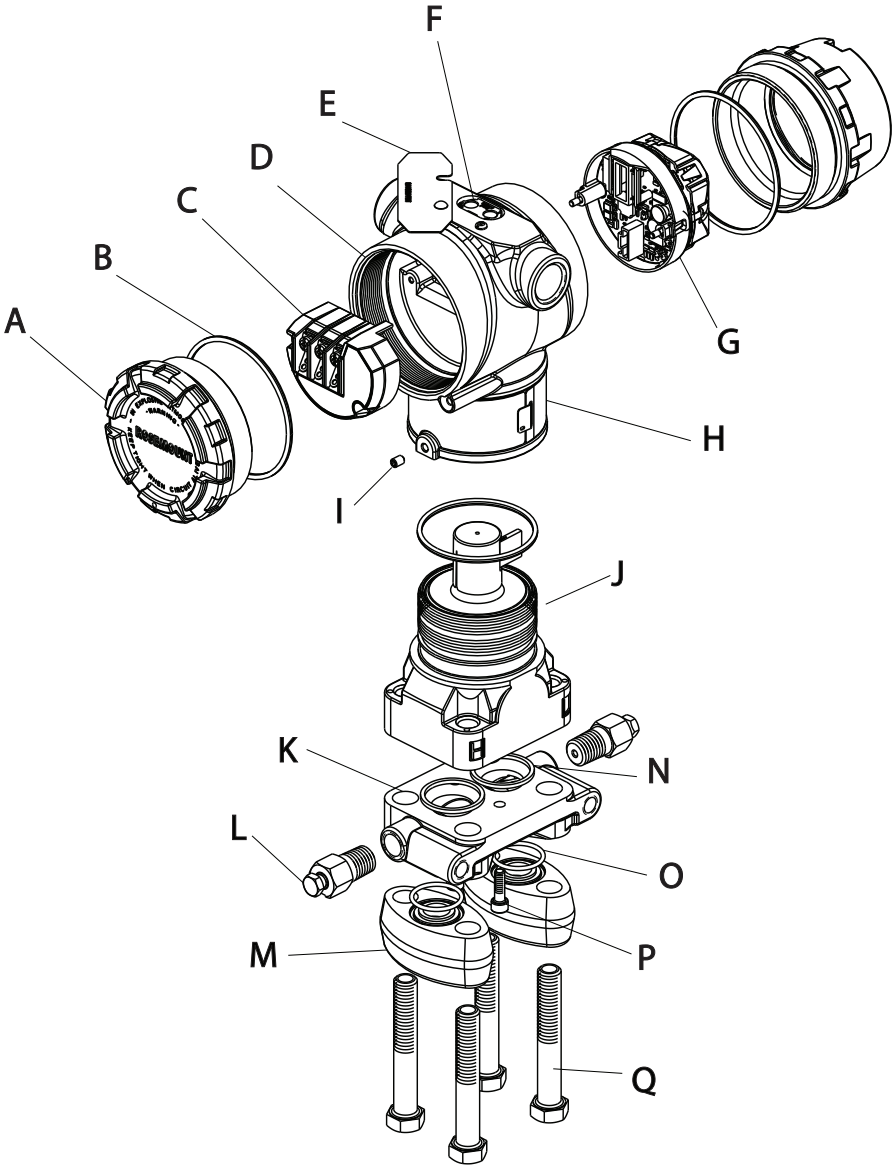

A. Cover
B. Cover O-ring
C. Terminal Block
D. Electronics Housing
E. Configuration Buttons Cover
F. Local Configuration Buttons
G. Electronics Board
H. Name Plate
I. Housing Rotation Set Screw (180 degree maximum rotation without further disassembly)
J. Sensor Module
K. Coplanar Flange
L. Drain/Vent Valve
M. Flange Adapters
N. Process O-Ring
O. Flange Adapter O-Ring
P. Flange Alignment Screw (not pressure retaining)
Q. Flange Bolts

(1) This section contains dimensional drawings for output codes A, F and X. For output codes W and M, visit http://www2.emersonprocess.com/en-US/brands/rosemount/Documentation-and-Drawings/Type-1-Drawings/Pages/index.aspx

Figure 16. Rosemount 3051L Dimensional Drawings

2-in. flange configuration (flush mount only)	3- and 4-in. flange configuration

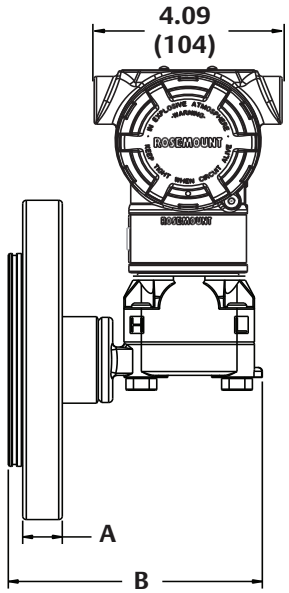

A. Flange Thickness
B. See Table 15.
C. Extension Diameter

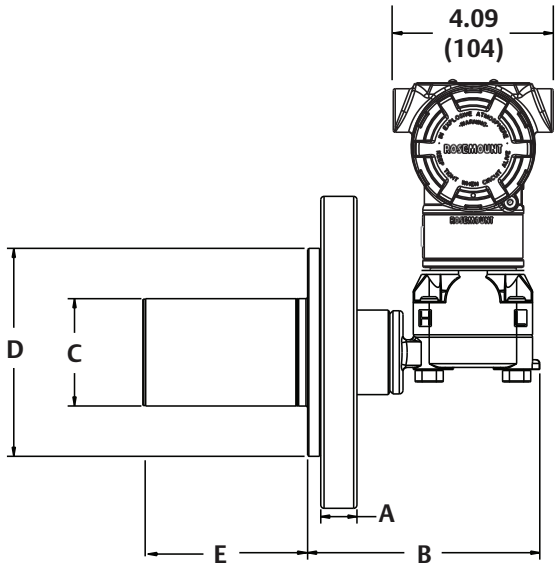

D. O.D. Gasket Surface
E. 2-in., 4-in., or 6-in. extension (only available with 3-in. and 4-in., DN80, and DN100 flange configurations)

Optional flushing connection ring (lower housing)	Diaphragm assembly and mounting flange

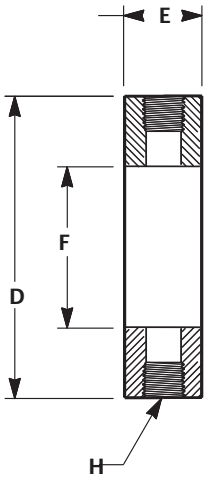

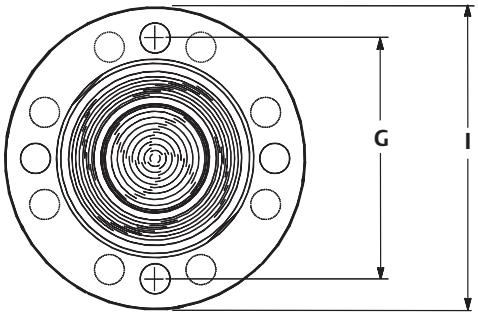

D. O.D. Gasket Surface
E. Lower Housing
F. Process Side
G. Bolt Circle Diameter
H. Flushing Connection
I. Outside Diameter

Diaphragm assembly and mounting flange

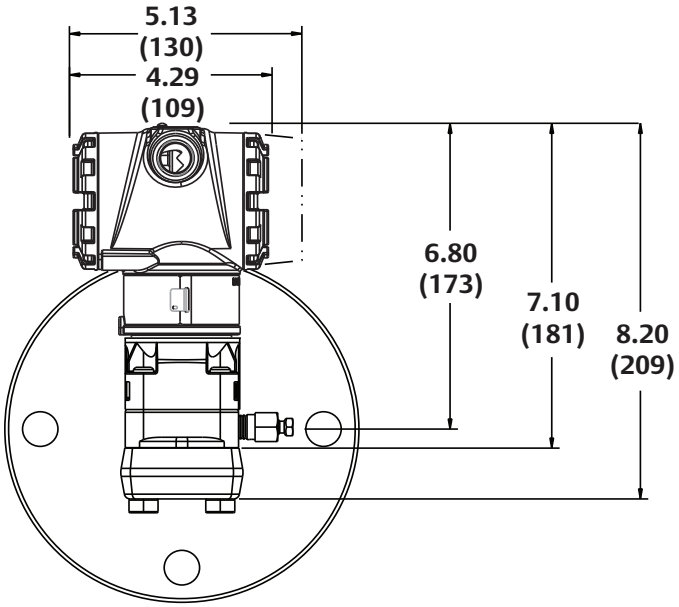

Dimensions are in inches (millimeters).

Table 15. 3051L Dimensional Specifications

Class[1]	Pipe size	Flange thickness A	Bolt circle diameter H	Outside diameter J	No. of bolts	Bolt hole diameter	Extension diameter[1] D	O.D. gasket surface E
ASME B16.5 (ANSI) 150	2 (51)	0.69 (18)	4.75 (121)	6.0 (152)	4	0.75 (19)	N/A	3.6 (92)
	3 (76)	0.88 (22)	6.0 (152)	7.5 (191)	4	0.75 (19)	2.58 (66)	5.0 (127)
	4 (102)	0.88 (22)	7.5 (191)	9.0 (229)	8	0.75 (19)	3.5 (89)	6.2 (158)
ASME B16.5 (ANSI) 300	2 (51)	0.82 (21)	5.0 (127)	6.5 (165)	8	0.75 (19)	N/A	3.6 (92)
	3 (76)	1.06 (27)	6.62 (168)	8.25 (210)	8	0.88 (22)	2.58 (66)	5.0 (127)
	4 (102)	1.19 (30)	7.88 (200)	10.0 (254)	8	0.88 (22)	3.5 (89)	6.2 (158)
ASME B16.5 (ANSI) 600	2 (51)	1.00 (25)	5.0 (127)	6.5 (165)	8	0.75 (19)	N/A	3.6 (92)
	3 (76)	1.25 (32)	6.62 (168)	8.25 (210)	8	0.88 (22)	2.58 (66)	5.0 (127)
DIN 2501 PN 10–40	DN 50	20 mm	125 mm	165 mm	4	18 mm	N/A	4.0 (102)
DIN 2501 PN 25/40	DN 80	24 mm	160 mm	200 mm	8	18 mm	66 mm	5.4 (138)
	DN 100	24 mm	190 mm	235 mm	8	22 mm	89 mm	6.2 (158)
DIN 2501 PN 10/16	DN 100	20 mm	180 mm	220 mm	8	18 mm	89 mm	6.2 (158)

Dimensions are in inches (millimeters).

(1) Tolerances are 0.040 (1.02), - 0.020 (0.51).

Class[1]	Pipe size	Process side G	Lower housing F		C
			1/4-in. NPT	1/2 -in. NPT	
ASME B16.5 (ANSI) 150	2 (51)	2.12 (54)	0.97 (25)	1.31 (33)	5.65 (143)
	3 (76)	3.60 (91)	0.97 (25)	1.31 (33)	5.65 (143)
	4 (102)	3.60 (91)	0.97 (25)	1.31 (33)	5.65 (143)
ASME B16.5 (ANSI) 300	2 (51)	2.12 (54)	0.97 (25)	1.31 (33)	5.65 (143)
	3 (76)	3.60 (91)	0.97 (25)	1.31 (33)	5.65 (143)
	4 (102)	3.60 (91)	0.97 (25)	1.31 (33)	5.65 (143)
ASME B16.5 (ANSI) 600	2 (51)	2.12 (54)	0.97 (25)	1.31 (33)	7.65 (194)
	3 (76)	3.60 (91)	0.97 (25)	1.31 (33)	7.65 (194)
DIN 2501 PN 10–40	DN 50	2.40 (61)	0.97 (25)	1.31 (33)	5.65 (143)
DIN 2501 PN 25/40	DN 80	3.60 (91)	0.97 (25)	1.31 (33)	5.65 (143)
	DN 100	3.60 (91)	0.97 (25)	1.31 (33)	5.65 (143)
DIN 2501 PN 10/16	DN 100	3.60 (91)	0.97 (25)	1.31 (33)	5.65 (143)

(1) Tolerances are 0.040 (1.02), - 0.020 (0.51).

Options

Standard configuration

Unless otherwise specified, transmitter is shipped as follows:

ENGINEERING UNITS Differential/Gage: Absolute/3051TA/3051TG:	 inH_2O (Range 0, 1, 2, and 3) psi (Range 4 and 5) psi (all ranges)
4 mA[(1)]	0 (engineering units above)
20 mA[(1)]:	Upper range limit
Output:	Linear
External buttons:	None
Flange type:	Specified model code option
Flange material:	Specified model code option
O-ring material:	Specified model code option
Drain/vent:	Specified model code option
LCD Display:	None
Alarm[(1)]:	High
Software tag:	(Blank)
Damping:	0.4 seconds[(2)]

(1) Not applicable to FOUNDATION fieldbus, PROFIBUS PA, or wireless.

(2) For fieldbus protocols, default damping is 1 second.

Custom configuration[(1)]

If Option Code C1 is ordered, the customer may specify the following data in addition to the standard configuration parameters.

- Output Information
- Transmitter Information
- LCD Display Configuration
- Hardware Selectable Information
- Signal Selection
- Wireless Information
- Scaled Variable
- and more

Refer to the "Rosemount 3051 Configuration Data Sheet" document number 00806-0100-4007 for Rosemount 3051 HART protocol.

For Wireless refer to the "Rosemount 3051 Wireless Configuration Data Sheet" (document number 00806-0100-4100).[(1)]

Tagging (3 options available)

- Standard SST hardware tag is wired to the transmitter. Tag character height is 0.125 in. (3,18 mm), 56 characters maximum.
- Tag may be permanently stamped on transmitter nameplate upon request, 56 characters maximum.
- Tag may be stored in transmitter memory. Character limit is dependent on protocol.
  - HART Revision 5: 8 characters
  - HART Revision 7 and Wireless: 32 characters
  - FOUNDATION fieldbus: 32 characters
  - PROFIBUS PA: 32 characters

(1) Not applicable to FOUNDATION fieldbus or PROFIBUS PA protocols.

Commissioning tag[1]

A temporary commissioning tag is attached to all transmitters. The tag indicates the device ID and allows an area for writing the location.

Optional Rosemount 304, 305 or 306 Integral Manifolds

Factory assembled to 3051C and 3051T transmitters. Refer to the following Product Data Sheet (document number 00813-0100-4839 for Rosemount 304 and 00813-0100-4733 for Rosemount 305 and 306) for additional information.

Other seals

Refer to Product Data Sheet 00813-0100-4016 for additional information.

Output information

Output range points must be the same unit of measure. Available units of measure include:

Pressure			
atm	inH_2O@4 °C[2]	g/cm^2	psi
mbar	mmH_2O	kg/cm^2	torr
bar	mmHg	Pa	cmH_2O @4 °C[1][2]
inH_20	mmH_2O @4 °C[2]	kPa	mH_2O @4 °C[1][2]
inHg	ftH_20	MPa[2]	ftH_2O @60 °F[1][2]
hPa[1][2]	inH_2O@60 °F[2]	kg/m^2[1][2]	cmHg @0 °C[1][2]
mHg @0 °C[1][2]	psf[1][2]	ftH_2O @4 °C[1][2]	

(1) Field configurable only, not available for factory calibration or custom configuration (option code C1 "Software configuration").

(2) Not available with Low Power (output option code M) or PROFIBUS PA (output option code W).

Display and interface options

M4 Digital Display with Local Operator Interface (LOI)

- Available for 4-20 mA HART and PROFIBUS PA

M5 Digital Display

- 2-Line, 5-Digit LCD display for low power output
- 2-Line, 8-Digit LCD display for 4-20 mA HART, FOUNDATION fieldbus and PROFIBUS PA
- 3-Line, 7-Digit LCD display for Wireless
- Direct reading of digital data for higher accuracy
- Displays user-defined flow, level, volume, or pressure units
- Displays diagnostic messages for local troubleshooting
- 90-degree rotation capability for easy viewing

Configuration buttons

Rosemount 3051 will ship with no buttons unless option D4 (Analog Zero and Span), DZ (Digital Zero), or M4 (LOI) for local configuration buttons are specified.

The Rosemount 3051 Wireless Transmitter is available with a Digital Zero button installed with or without the LCD display digital display.

Transient protection (option code T1)

Tested in accordance with IEEE C62.41.2-2002, Location Category B

6 kV crest (0.5 µs - 100 kHz)
3 kA crest (8 × 20 µs)
6 kV crest (1.2 × 50 µs)

Bolts for flanges and adapters

- Options permit bolts for flanges and adapters to be obtained in various materials
- Standard material is plated carbon steel per ASTM A449, Type 1

  L4 Austenitic 316 Stainless Steel Bolts

  L5 ASTM A 193, Grade B7M Bolts

  L6 Alloy *K-500* Bolts

Conduit plug

DO 316 SST Conduit Plug
Single 316 SST conduit plug replaces carbon steel plug

Rosemount 3051C Coplanar Flange and 3051T Bracket Option

B4 Bracket for 2-in. Pipe or Panel Mounting

- For use with the standard coplanar flange configuration
- Bracket for mounting of transmitter on 2-in. pipe or panel
- Stainless steel construction with stainless steel bolts

(1) Only applicable to FOUNDATION fieldbus.

Rosemount 3051C Traditional Flange Bracket Options

B1 Bracket for 2-in. Pipe Mounting

- For use with the traditional flange option
- Bracket for mounting on 2-in. pipe
- Carbon steel construction with carbon steel bolts
- Coated with polyurethane paint

B2 Bracket for Panel Mounting

- For use with the traditional flange option
- Bracket for mounting transmitter on wall or panel
- Carbon steel construction with carbon steel bolts
- Coated with polyurethane paint

B3 Flat Bracket for 2-in. Pipe Mounting

- For use with the traditional flange option
- Bracket for vertical mounting of transmitter on 2-in. pipe
- Carbon steel construction with carbon steel bolts
- Coated with polyurethane paint

B7 B1 Bracket with SST Bolts

- Same bracket as the B1 option with Series 300 stainless steel bolts

B8 B2 Bracket with SST Bolts

- Same bracket as the B2 option with Series 300 stainless steel bolts

B9 B3 Bracket with SST Bolts

- Same bracket as the B3 option with Series 300 stainless steel bolts

BA Stainless Steel B1 Bracket with SST Bolts

- B1 bracket in stainless steel with Series 300 stainless steel bolts

BC Stainless Steel B3 Bracket with SST Bolts

- B3 bracket in stainless steel with Series 300 stainless steel bolts

Emerson Process Management
Rosemount Inc.
8200 Market Boulevard
Chanhassen, MN 55317 USA
T (U.S.) 1-800-999-9307
T (International) (952) 906-8888
F (952) 906 8889
www.rosemount.com

Emerson Process Management
Latin America
1300 Concord Terrace, Suite 400
Sunrise Florida 33323 USA
Tel + 1 954 846 5030
www.rosemount.com

Emerson Process Management Asia Pacific Pte Ltd
1 Pandan Crescent
Singapore 128461
Tel +65 6777 8211
Fax +65 6777 0947
Service Support Hotline : +65 6770 8711
Email : Enquiries@AP.EmersonProcess.com
www.rosemount.com

Emerson Process Management
Blegistrasse 23
P.O. Box 1046
CH 6341 Baar
Switzerland
Tel +41 (0) 41 768 6111
Fax +41 (0) 41 768 6300
www.rosemount.com

Emerson FZE
P.O. Box 17033
Jebel Ali Free Zone
Dubai UAE
Tel +971 4 811 8100
Fax +971 4 886 5465
www.rosemount.com

Standard Terms and Conditions of Sale can be found at www.rosemount.com\terms_of_sale
The Emerson logo is a trade mark and service mark of Emerson Electric Co.
Tuned System, Coplanar, SmartPower, Annubar, Instrument Toolkit, Rosemount, and the Rosemount logotype are registered trademarks of Rosemount Inc.
PlantWeb is a registered trademark of one of the Emerson Process Management group of companies.
HART and *Wireless*HART are registered trademarks of the HART Communication Foundation.
FOUNDATION fieldbus is a trademark of the Fieldbus Foundation.
PROFIBUS is a registered trademark of PROFINET International (PI).
Fluorinert is a trademark of 3M.
Neobee is a registered trademark of Stepan Speciality Products, LLC.
SYLTHERM is a trademark of Dow Corning Corporation.
eurofast and minifast are registered trademarks of TURCK.
All other marks are the property of their respective owners.
© 2014 Rosemount Inc. All rights reserved.

Series L6

FLOTECT® Liquid Level Switch

Easy In-wall or External Installation, Up to 2000 psig (138 bar)

Model L6 with External Float Chamber

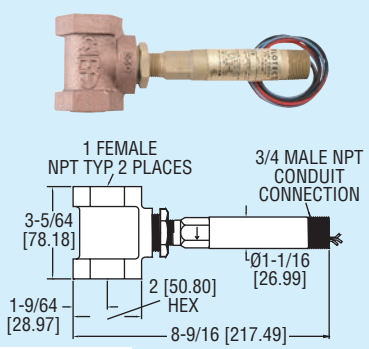

Model L6 with Spherical Float

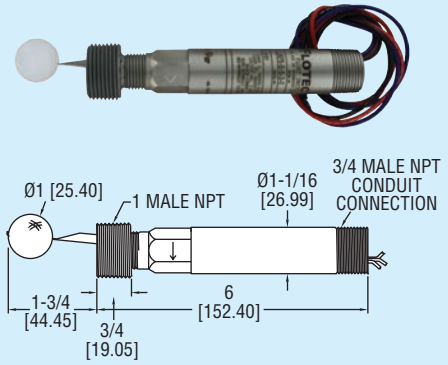

Model L6 with Cylindrical Float

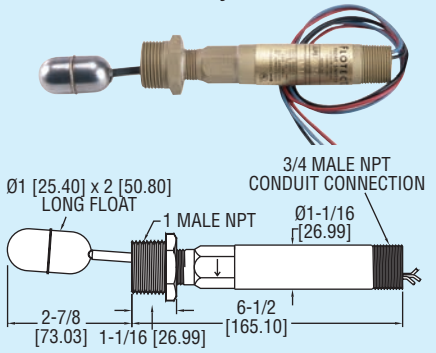

Scan here to watch product video

Surprisingly compact, the Series L6 Flotect® Level switch is designed and built for years of trouble-free service in a wide variety of process liquid level applications. Operation is simple and dependable with no mechanical linkage as the level switch is magnetically actuated. The float lever pivoted within the body moves when the process liquid displaces the float. A magnet on the opposite end of the float lever controls a second magnet on the switch actuating lever located in the switch housing.

FEATURES

- Leak proof lower body machined from bar stock
- Choice of models for direct side wall mounting or mounted in a tee to act as an external float chamber
- Weatherproof
- Explosion-proof (listings included in specifications)
- Electrical assembly can be easily replaced without removing the unit from the installation so that the process does not have to be shut down
- Sensitive to level changes of less than 1/2″ (12 mm)

Model	Body	Installation	Float Material	Max. Pressure psig (bar)	Min. Sp. Gr.
L6EPB-B-S-3-O	Brass	Side Wall Mounting	Polypropylene Spherical	1000 (69)	0.9
L6EPB-B-S-3-A	Brass	Side Wall Mounting	304 SS Cylindrical	200 (13.8)	0.5
L6EPB-B-S-3-C	Brass	Side Wall Mounting	304 SS Spherical	350 (24.1)	0.7
L6EPB-B-S-3-B	Brass	Brass External Float Chamber (Tee)	Polypropylene Spherical	250 (17.2)	0.9
L6EPB-B-S-3-H	Brass	Brass External Float Chamber (Tee)	304 SS Spherical	250 (17.2)	0.7
L6EPS-S-S-3-O	303 SS	Side Wall Mounting	Polypropylene Spherical	2000 (138)	0.9
L6EPS-S-S-3-A	303 SS	Side Wall Mounting	304 SS Cylindrical	200 (13.8)	0.5
L6EPS-S-S-3-C	303 SS	Side Wall Mounting	304 SS Spherical	350 (24.1)	0.7
L6EPS-S-S-3-S	303 SS	304 SS External Float Chamber (Tee)	Polypropylene Spherical	2000 (138)	0.9
L6EPS-S-S-3-L	303 SS	304 SS External Float Chamber (Tee)	304 SS Spherical	350 (24.1)	0.7

OPTIONS

Gold Plated Contacts option for dry circuits, add suffix **-MV** (see electrical rating in specifications)
High Temperature option rated 400°F (204°C), add suffix **-MT** (see electrical rating in specifications, no listings or approvals, only available on models with stainless steel floats)
CSA and UL approved construction, includes weatherproof and explosion-proof junction box, add suffix **-CSA**
ATEX compliant construction includes, weatherproof and explosion-proof, junction box, add suffix **-AT**
IECEx certified construction, add suffix **-IEC**
DPDT contacts, change seventh character in model number to “D”.
Example: L6EPB-B-D-3-O

Options Not Shown: 1-1/2″ and 2″ male NPT process connection, 2″ female NPT connection tee, and top mount.

SPECIFICATIONS

Service: Liquids compatible with wetted materials.
Wetted Materials:
Float: Solid polypropylene or 304 SS.
Lower Body: Brass or 303 SS.
Magnet: Ceramic.
External Float Chamber (Tee): Matches lower body choice of brass or 303 SS.
Other: Lever Arm, Spring, Pin, etc.: 301 SS.
Temperature Limit: -4 to 220°F (-20 to 105°C) Standard, MT high temperature option 400°F (205°C)(MT not UL, CSA, ATEX, IECEx and KC). ATEX compliant AT, IECEx IEC and KC option ambient temperature -4 to 167°F (-20 to 75°C) process temperature: -4 to 220°F (-20 to 105°C).
Pressure Limits: See model chart.
Enclosure Rating: Weatherproof and Explosion-proof. Listed with UL and CSA for Class I, Groups A, B, C and D; Class II, Groups E, F, and G. (Group A on stainless steel body models only).
ATEX CE 0344 Ex II 2 G Ex d IIC T6 Gb Process Temp≤75°C.
EC-Type Certificate No.: KEMA 04ATEX2128.
ATEX Standards: EN 60079-0: 2009; EN60079-1: 2007.
IECEx Certified: For Ex d IIC T6 Gb Process Temp≤ 75°C.
IECEx Certificate of Conformity: IECEx DEK II.0039.
IECEx Standards: IEC 60079-00: 2007; IEC 60079-1: 2007.
Korean Certified (KC) for Ex d IIC T6 Gb Process Temp≤75°C.
KTL Certificate Number: 2012-2454-75.
Switch Type: SPDT snap switch standard, DPDT snap switch optional.
Electrical Rating: UL models: 5A @ 125/250 VAC (V~). CSA, ATEX and IECEx models: 5A @ 125/250 VAC (V~); 5A res., 3A ind. @ 30 VDC (V⎓). MV option: .1A @ 125 VAC (V~). MT option: 5A @125/250 VAC (V~). [MT option not UL, CSA, ATEX or IECEx].
Electrical Connections: UL models: 18 AWG, 18″ (460 mm) long. ATEX/CSA/IECEx models: terminal block.
Upper Body: Brass or 303 SS.
Conduit Connection: 3/4″ male NPT standard, 3/4″ female NPT on junction box models.
Process Connection: 1″ male NPT on models without external float chamber, 1″ female NPT on models with external float chamber.
Mounting Orientation: Horizontal with index arrow pointing down.
Weight: Approximately 1 lb (.5 kg) without external float chamber, 1.75 lb (.8 kg) with external float chamber.
Specific Gravity: See chart.
Agency Approvals: ATEX, CE, CSA, IECEx, KTL, UL.

Fliteway Technologies, Inc.

Feed Pump Skid

2129 East Birchwood Ave. Cudahy, WI 53110

(414) 483-5600 1-800-236-3580 FAX (414) 483-1957

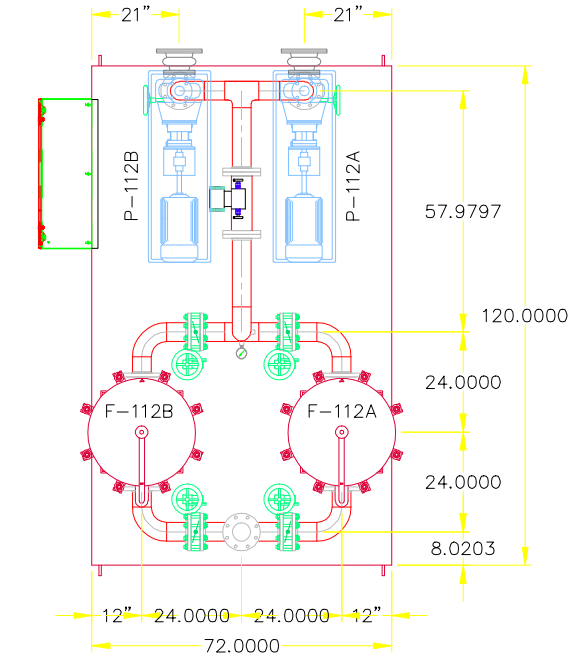

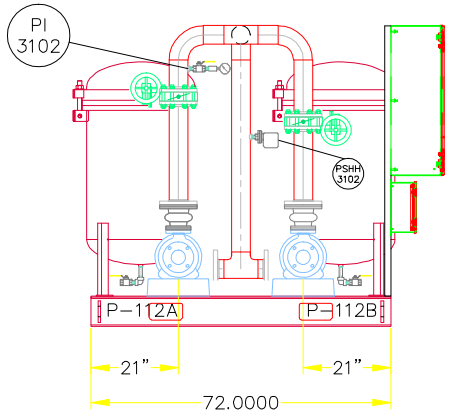

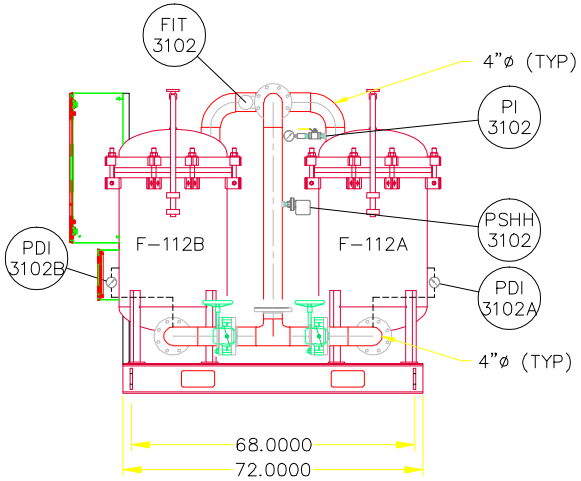

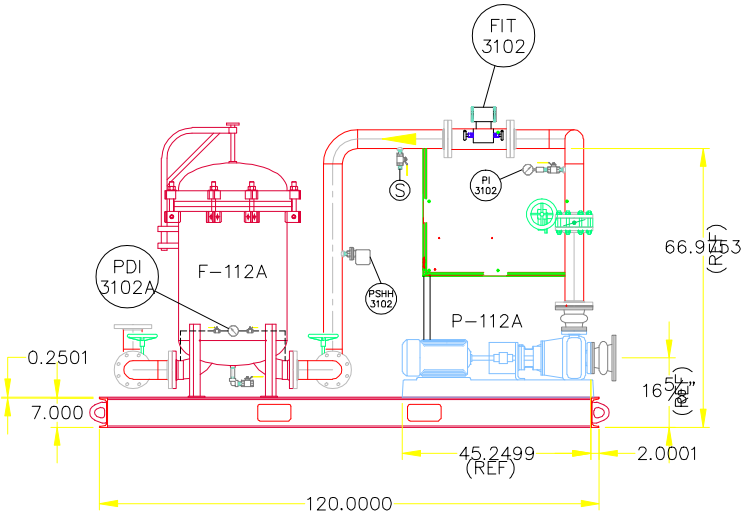

THIS DRAWING IS THE PROPERTY OF
Fliteway Technologies, Inc
2129 EAST BIRCHWOOD AVE
CUDAHY WI, 53110
414.483.5600 414.483.1957

AND IS NOT TO BE REPRODUCED WITHOUT WRITTEN PERMISSION

3/19/15

6'X10' FEED PUMP SKID

CB&I WATER TREATMENT

SIZE	FSCM NO.	DWG NO. Q14508
SCALE NONE		SHEET 1 OF 1

CRANE ENGINEERING SALES

February 9, 2015

Proposal No: TS14-12-11 01
Item No: Feed Pumps

MODEL:3196 STi SIZE:2x3-6 QTY: 1

i-FRAME™

Operating Conditions

SERVICE

LIQUID	Groundwater Temp. 70.0 deg F, SP.GR 1.000, Viscosity 1.000 cp, rated / max. suction pressure 0.0 / 0.0 psi g
CAPACITY Rated	200.0 gpm
HEAD	100.0 (ft)

Performance at 3500 RPM per HI 14.6 1B basis power

PUBLISHED EFFY	66.5% (CDS)
RATED EFFY	63.5% with contract seal
RATED POWER	8.4 hp (incl. Mech. seal drag 0.37). (Run out 10.7 hp)
NPSHR	10.0 ft
DISCH PRESSURE (R)	45.9 psi g (50.0 psi g @ Shut off) based on 0.0 psi g rated suction pressure
PERF. CURVE	2228-6 (Rotation CW viewed from coupling end)
SHUT OFF HEAD	115.6 ft
MIN. FLOW	Continuous Stable: 35.5 gpm Hydraulic: 35.5 gpm Thermal: N/A

Materials

CONSTRUCTION	Ductile iron
CASING	Ductile iron (max.casing pressure @ rated temperature 250.0 psi g)
ST.BOX COVER	Ductile iron
IMPELLER	Ductile iron - Open (5.3750 in rated, max=6.0620 in, min=4.0000 in)
CASING GASKETS	Aramid Fiber with EPDM and Silicate Filler
IMPELLER O-RING	Teflon
SHAFT MATERIAL	SAE 4140
SHAFT SLEEVE	316SS
LUBRICATION	Flood oil
SEAL CHAMBER	Taper bore plus with axial ribs
GLAND	316SS Flush quench and drain
BEARINGS	6207 (Inboard) 5306 (Outboard)
COUPLING	Rexnord - Omega Rex Elastomer- ES-4 (standard orange element)-S.F. 1.00
COUPLING GUARD	Carbon steel
BASEPLATE	Cast iron camber top E00025A

Sealing Method

MECHANICAL SEAL	John Crane 5611Q X(1)F(50)1XO(58)1 (Carbon vs Silicon Carbide with Viton) - (Cartridge - Single)

Flanges

150# flat face

Frame Connections

Bearing frame drain

Frame cooler access

Oil fill connection

Frame features

Ductile iron frame adapter

Inpro VBXX-D Hybrid Bearing Isolators

Premium Severe Duty Thrust Bearings

i- ALERT™ Condition Monitor

Assembly and Testing

Casing & Cover - Standard hydro test

Impeller balanced to ISO G6.3

Painting

Goulds Blue standard painting

Warranty

5 Year Extended Warranty (All the components, manufactured by ITT Goulds pumps, in the liquid end and power end are covered).

Driver : Electric motor Manufacturer : Pump mfg's Choice

FURNISHED BY	Pump mfg	MOUNTED BY	Pump mfg
RATING	15.0 hp (11.2 KW)	ENCLOSURE	TEFC - Premium Efficiency
PHASE/FREQ/VOLTS	3/60 Hz/460	SPEED	3600 RPM
INSULATION/SF	F/1.15	FRAME	254T

Freight Terms

Freight invoices received from ITT partner carriers are proprietary information and cannot be divulged for any reason. ITT will provide an ITT generated freight invoice upon request.

Weights and Measurements

TOTAL NET UNIT WEIGHT / VOLUME	**490.5 lb / 7.2 ft³**
TOTAL GROSS UNIT WEIGHT / GROSS VOLUME	**604.5 lb / 22.8 ft³**

Program Version 1.51.0.1

Drawing Revision Limit

Drawings returned with status approved as noted or revise and re-submit will be corrected and resubmitted only once. Thereafter, additional comments or revisions to these drawings will incur a charge of $250 per drawing.

Our offer does not include specific review and incorporation of any Statutory or Regulatory Requirements and the offer is limited to the requirements of the design specifications. Should any Statutory or Regulatory requirements need to be reviewed and incorporated then the Customer is responsible to identify those and provide copies for review and revision of our offer.

Our quotation is offered in accordance with our comments and exceptions identified in our proposal.

Click here to download the pump Bulletin

Click here to learn more about the new *i-FRAME™*

GOULDS PUMPS

OUTLINE DRAWING

Model 3196 STi
Size 2x3-6

ITT

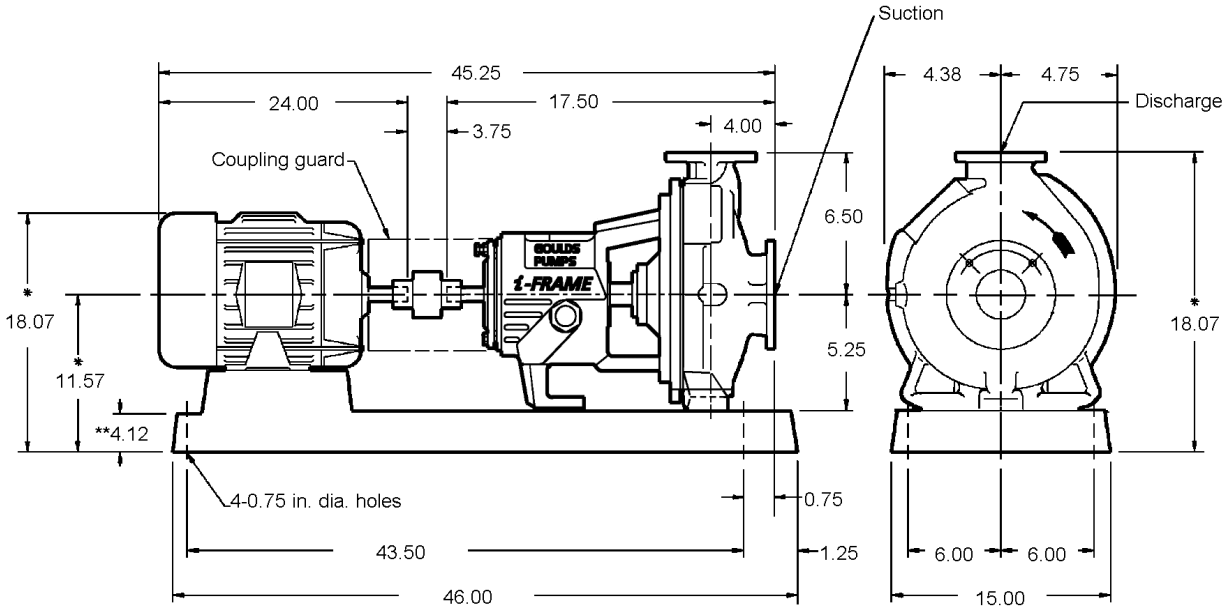

Pump Specification

SUCT.FLANGE SIZE	*3"*	DRILLING	*ANSI 150#*	FACING	*FF*	FINISH	*SERRATED*
DISCH.FLANGE SIZE	*2"*	DRILLING	*ANSI 150#*	FACING	*FF*	FINISH	*SERRATED*
PUMP ROTATION (LOOKING AT PUMP FROM MOTOR)				*CW*			
TYPE OF LUBRICATION	*FLOOD OIL*					COOLED	*NO*
TYPE OF STUFFING BOX	*TAPER BORE PLUS WITH AXIAL RIBS*					COOLED	*NO*
TYPE OF SEALING	*MECHANICAL SEAL*						

Weights and Measurements

PUMP	*95.0 lb*
MOTOR/CPLG	*270.0/5.5 lb*
BASEPLATE	*120.0 lb*
TOTAL	*490.5 lb*
GR.VOLUME w/BOX	*22.8 ft³*
GR.WEIGHT w/BOX	*604.5 lb*

Motor Specification

MOTOR BY	*PUMP MFG*	MOUNT BY	*PUMP MFG*	MFG.	*PUMP MFG'S CHOICE*
FRAME	*254T*	POWER	*15.0 hp*	RPM	*3600*
PHASE	*3*	FREQUENCY	*60 HZ*	VOLTS	*460*
INSULATION	*F*	S.F.	*1.15*		
ENCLOSURE	*TEFC - PREMIUM EFFICIENCY*				

Notes and References

- MTR DIMENSIONS ARE APPROXIMATE
- INSTALL FOUNDATION BOLTS IN PIPE SLEEVES
- ALLOW FROM 0.75 to 1.50in. FOR GROUTING. SEE INSTRUCTION BOOK FOR DETAILS.

*Tolerance is -0.50 +0

** Foundation bolt grip thickness

Auxiliary Specification

COUPLING BY	*PUMP MFG*	CPLG TYPE	*REXNORD OMEGA REX ELASTOMER- ES-4 (STANDARD ORANGE*
CPL GUARD BY	*PUMP MFG*	CPLG GUARD MATL	*CARBON STEEL*
BASEPLATE	*CAST IRON CAMBER TOP E00025A*		
MECH.SEAL	*JOHN CRANE 5611Q X(1)F(50)1XO(58)1 (CARBON VS SILICON CARBIDE WITH VITON)*		

FOR PUMP TAPPED OPENINGS REFER TO DWG.:
TTS14-12-11 01 / Feed Pumps

DRAWING IS FOR REFERENCE ONLY.
NOT CERTIFIED FOR CONSTRUCTION UNLESS SIGNED.

Customer: CRANE ENGINEERING SALES
Serial No:
Customer P.O. No:
Item No: Feed Pumps
End User: .
Service:

Copyright 2015
ITT Corp

All dimensions are in inches.
Drawing is not to scale
Weights (lbs) are approximate

DRAWING NO TS14-12-11 01/Feed Pumps

Model: 3196	Size: 2x3-6	Group: STi	60Hz	RPM: 3500	Stages: 1

Job/Inq.No. :
Purchaser : CRANE ENGINEERING SALES
End User: .
Issued by : Tom Schroeder
Item/Equip.No. : Feed Pumps
Quotation No. : TS14-12-11 01
Date : 02/09/2015
Service :
Order No. :
Certified By :
Rev. : 0

Operating Conditions

Liquid:	Groundwater
Temp.:	70.0 deg F
S.G./Visc.:	1.000/1.000 cp
Flow:	200.0 gpm
TDH:	100.0 ft
NPSHa:	0.0 ft
Solid size:	
% Susp. Solids (by wtg):	

Pump Performance

Published Efficiency:	66.5 %	Suction Specific Speed:	8,473 gpm(US) ft
Rated Pump Efficiency:	63.5 %	Min. Hydraulic Flow:	35.5 gpm
Rated Total Power:	8.4 hp	Min. Thermal Flow:	N/A
Non-Overloading Power:	10.7 hp		
Imp. Dia. First 1 Stg(s):	5.3750 in		
NPSHr:	10.0 ft		
Shut off Head:	115.6 ft		
Vapor Press:		Max. Solids Size:	0.3750 in

Notes: 1. Power and efficiency losses are not reflected on the curve below.
2. Elevated temperature effects on performance are not included.

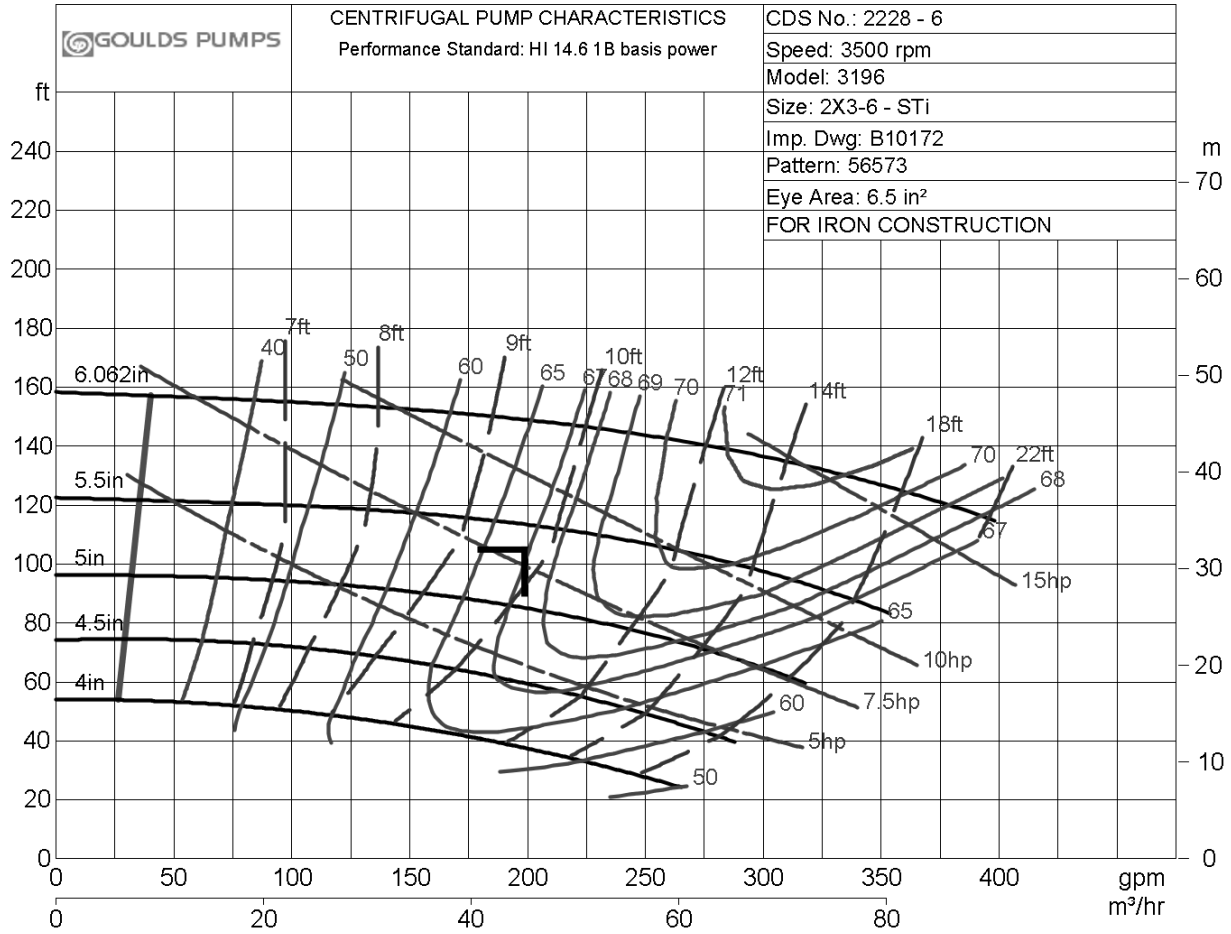

ITT

GOULDS PUMPS

Installation, Operation, and Maintenance Manual

Model 3196 i-FRAME

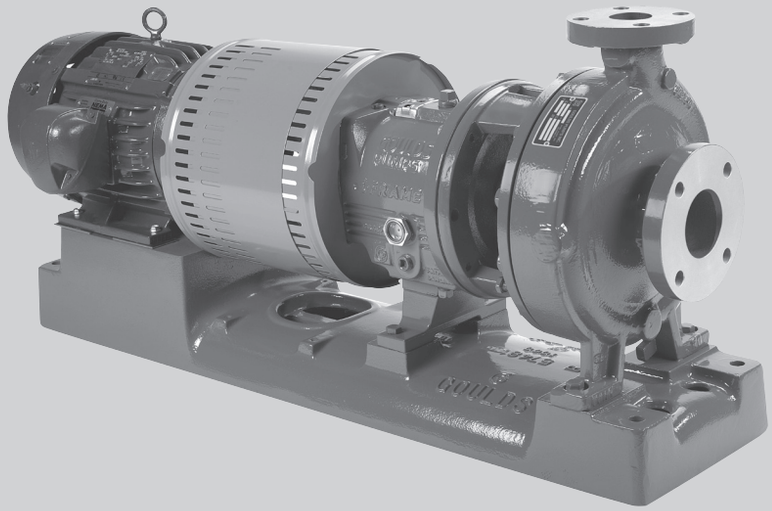

ITT

ENGINEERED FOR LIFE

Table of Contents

Introduction and Safety 4
Introduction 4
Safety 4
Safety terminology and symbols 5
Environmental safety 5
User safety 6
Ex-approved products 8
Product approval standards 8
Product warranty 9

Transportation and Storage 11
Inspect the delivery 11
Inspect the package 11
Inspect the unit 11
Transportation guidelines 11
Pump handling 11
Lifting methods 11
Storage guidelines 14
Pump storage requirements 14
Frostproofing 15

Product Description 16
General description 3196 16
Part description 3196 17
General description i-ALERT™ Condition Monitor 18
Nameplate information 19

Installation 22
Preinstallation 22
Pump location guidelines 22
Foundation requirements 22
Baseplate-mounting procedures 23
Prepare the baseplate for mounting 23
Install the baseplate using shims or wedges 23
Install the baseplate using jackscrews 24
Install the baseplate using spring mounting 27
Install the baseplate using stilt mounting 28
Baseplate-leveling worksheet 30
Install the pump, driver, and coupling 31
Pump-to-driver alignment 31
Alignment checks 31
Permitted indicator values for alignment checks 32
Alignment measurement guidelines 32
Attach the dial indicators for alignment 32
Pump-to-driver alignment instructions 33
C-face adapter 36
Grout the baseplate 36
Piping checklists 37
General piping checklist 37
Suction-piping checklist 39
Discharge piping checklist 41

Commissioning, Startup, Operation, and Shutdown 43
Preparation for startup 43
Remove the coupling guard 44
Check the rotation - Frame Mounted 46
Impeller-clearance check 46
Impeller clearances (3196 and HT 3196) 47
Impeller-clearance setting 47
Set the impeller clearance - dial indicator method (all except CV 3196) 47
Set the impeller clearance - feeler gauge method (all except CV 3196) 48
Couple the pump and driver 49
Install the coupling guard 50
Bearing lubrication 54
Shaft-sealing options 56
Mechanical seal options 56
Connection of sealing liquid for mechanical seals 56
Packed stuffing box option 57
Connection of sealing liquid for a packed stuffing box 57
Dynamic-seal option 57
Set an elastomeric face seal 58
Pump priming 58
Prime the pump with the suction supply above the pump 58
Prime the pump with the suction supply below the pump 59
Other methods of priming the pump 60
Start the pump 60
Activate the i-ALERT Condition Monitor 61
i-ALERT™ Condition Monitor routine operation 62
Pump operation precautions 62
Shut down the pump 63
Deactivate the i-ALERT™ Condition Monitor 63
Reset the i-ALERT™ Condition Monitor 64
Make the final alignment of the pump and driver 64

Maintenance 65
Maintenance schedule 65
Bearing maintenance 66
Lubricating-oil requirements 66
Regrease the grease-lubricated bearings 67
Lubricate the bearings after a shutdown period 68
Shaft seal maintenance 68
Mechanical-seal maintenance 68
Packed stuffing-box maintenance 69
Dynamic-seal maintenance 69
Disassembly 70
Disassembly precautions 70
Tools required 70
Drain the pump 71
Remove the coupling 71
Remove the back pull-out assembly 71
Remove the coupling hub 73
Impeller removal 74
Seal-chamber cover removal 76
Remove the seal-chamber cover (3196, CV 3196, HT 3196, LF 3196, 3796) 76
Remove the stuffing-box cover (3196, CV 3196, HT 3196, LF 3196, 3796) 77
Remove the dynamic seal 78
Remove the frame adapter (MTi, LTi, XLT-i, i17) 79
Remove the inboard labyrinth oil seal 79
Power-end disassembly 79

Disassemble the bearing frame ... 88
Guidelines for i-ALERT™ Condition Monitor disposal ... 89
Disassemble the C-face adapter ... 89
Pre-assembly inspections ... 90
Replacement guidelines ... 90
Shaft and sleeve replacement guidelines ... 92
Bearing-frame inspection ... 92
C-face adapter inspection ... 93
Seal chamber and stuffing box cover inspection ... 94
Bearings inspection ... 95
Bearing-housing inspection ... 95
Bearing fits and tolerances ... 97
Reassembly ... 98
Assemble the rotating element and the bearing frame (STi and MTi) ... 98
Assemble the rotating element and the bearing frame (STi and MTi with duplex bearings) ... 100
Assemble the rotating element and the bearing frame (LTi) ... 103
Assemble the rotating element and the bearing frame (XLT-i and i17) ... 106
Assemble the rotating element and the bearing frame (XLT-i and i17 with duplex bearings) ... 109
Assemble the frame ... 113
INPRO labyrinth oil seal description ... 116
Assemble the INPRO labyrinth oil seal ... 117
Assemble the C-face adapter ... 117
Shaft sealing ... 118
Install the impeller ... 124
Attach the i-ALERT™ Condition Monitor to the pump ... 126
Post-assembly checks ... 127
Install the back pull-out assembly (except HT 3196) ... 127
Assembly references ... 129
Spare parts ... 130
Interchangeability drawings ... 130
3196 interchangeability ... 130
Lubrication conversion ... 131
Frame lubrication conversion ... 131
Convert from greased-for-life or regreaseable to oil-lubricated bearings ... 132
Conversion from flood-oil to pure-oil mist ... 133
Convert from flood oil to regreaseable ... 133

Troubleshooting ... 134
Operation troubleshooting ... 134
Alignment troubleshooting ... 135
Assembly troubleshooting ... 135
i-ALERT™ Condition Monitor troubleshooting ... 135

Parts Listings and Cross-Sectionals ... 136
Parts list ... 136

Certification: CE or CE ATEX ... 145
Certificates of conformance ... 145

Other Relevant Documentation or Manuals ... 151

Local ITT Contacts ... 152
Regional offices ... 152

Introduction and Safety

Introduction

Purpose of this manual

The purpose of this manual is to provide necessary information for:

- Installation
- Operation
- Maintenance

CAUTION:
Read this manual carefully before installing and using the product. Improper use of the product can cause personal injury and damage to property, and may void the warranty.

NOTICE:
Save this manual for future reference, and keep it readily available at the location of the unit.

Requesting other information

Special versions can be supplied with supplementary instruction leaflets. See the sales contract for any modifications or special version characteristics. For instructions, situations, or events that are not considered in this manual or in the sales documents, please contact the nearest ITT representative.

Always specify the exact product type and identification code when requesting technical information or spare parts.

Safety

WARNING:

- The operator must be aware of safety precautions to prevent physical injury.
- Any pressure-containing device can explode, rupture, or discharge its contents if it is over-pressurized. Take all necessary measures to avoid over-pressurization.
- Operating, installing, or maintaining the unit in any way that is not covered in this manual could cause death, serious personal injury, or damage to the equipment. This includes any modification to the equipment or use of parts not provided by ITT. If there is a question regarding the intended use of the equipment, please contact an ITT representative before proceeding.
- This manual clearly identifies accepted methods for disassembling units. These methods must be adhered to. Trapped liquid can rapidly expand and result in a violent explosion and injury. Never apply heat to impellers, propellers, or their retaining devices to aid in their removal unless explicitly stated in this manual.
- If the pump/motor is damaged or leaking, do not operate as it may cause an electric shock, fire, explosion, liberation of toxic fumes, physical harm, or environmental damage. Correct/repair the problem prior to putting back in service.
- Do not change the service application without the approval of an authorized ITT representative.

CAUTION:
You must observe the instructions contained in this manual. Failure to do so could result in physical injury, damage, or delays.

Safety terminology and symbols

About safety messages

It is extremely important that you read, understand, and follow the safety messages and regulations carefully before handling the product. They are published to help prevent these hazards:

- Personal accidents and health problems
- Damage to the product
- Product malfunction

Hazard levels

Hazard level	Indication
DANGER:	A hazardous situation which, if not avoided, will result in death or serious injury
WARNING:	A hazardous situation which, if not avoided, could result in death or serious injury
CAUTION:	A hazardous situation which, if not avoided, could result in minor or moderate injury
NOTICE:	• A potential situation which, if not avoided, could result in undesirable conditions • A practice not related to personal injury

Hazard categories

Hazard categories can either fall under hazard levels or let specific symbols replace the ordinary hazard level symbols.
Electrical hazards are indicated by the following specific symbol:

Electrical Hazard:

These are examples of other categories that can occur. They fall under the ordinary hazard levels and may use complementing symbols:

- Crush hazard
- Cutting hazard
- Arc flash hazard

The Ex symbol

The Ex symbol indicates safety regulations for Ex-approved products when used in atmospheres that are potentially explosive or flammable.

Environmental safety

The work area

Always keep the station clean to avoid and/or discover emissions.

Waste and emissions regulations

Observe these safety regulations regarding waste and emissions:

- Appropriately dispose of all waste.
- Handle and dispose of the processed liquid in compliance with applicable environmental regulations.
- Clean up all spills in accordance with safety and environmental procedures.
- Report all environmental emissions to the appropriate authorities.

WARNING:
Do NOT send the product to the ITT manufacturer if it has been contaminated by any nuclear radiation. Inform ITT so that accurate actions can take place.

Electrical installation

For electrical installation recycling requirements, consult your local electric utility.

Recycling guidelines

Always follow local laws and regulations regarding recycling.

User safety

General safety rules

These safety rules apply:

- Always keep the work area clean.
- Pay attention to the risks presented by gas and vapors in the work area.
- Avoid all electrical dangers. Pay attention to the risks of electric shock or arc flash hazards.
- Always bear in mind the risk of drowning, electrical accidents, and burn injuries.

Safety equipment

Use safety equipment according to the company regulations. Use this safety equipment within the work area:

- Helmet
- Safety goggles, preferably with side shields
- Protective shoes
- Protective gloves
- Gas mask
- Hearing protection
- First-aid kit
- Safety devices

NOTICE:
Never operate a unit unless safety devices are installed. Also see specific information about safety devices in other chapters of this manual.

Electrical connections

Electrical connections must be made by certified electricians in compliance with all international, national, state, and local regulations. For more information about requirements, see sections dealing specifically with electrical connections.

Precautions before work

Observe these safety precautions before you work with the product or are in connection with the product:

- Provide a suitable barrier around the work area, for example, a guard rail.
- Make sure that all safety guards are in place and secure.
- Make sure that you have a clear path of retreat.
- Make sure that the product cannot roll or fall over and injure people or damage property.
- Make sure that the lifting equipment is in good condition.
- Use a lifting harness, a safety line, and a breathing device as required.
- Allow all system and pump components to cool before you handle them.
- Make sure that the product has been thoroughly cleaned.
- Disconnect and lock out power before you service the pump.
- Check the explosion risk before you weld or use electric hand tools.

Precautions during work

Observe these safety precautions when you work with the product or are in connection with the product:

CAUTION:
Read this manual carefully before installing and using the product. Improper use of the product can cause personal injury and damage to property, and may void the warranty.

- Never work alone.
- Always wear protective clothing and hand protection.
- Stay clear of suspended loads.
- Always lift the product by its lifting device.
- Beware of the risk of a sudden start if the product is used with an automatic level control.
- Beware of the starting jerk, which can be powerful.
- Rinse the components in water after you disassemble the pump.
- Do not exceed the maximum working pressure of the pump.
- Do not open any vent or drain valve or remove any plugs while the system is pressurized. Make sure that the pump is isolated from the system and that pressure is relieved before you disassemble the pump, remove plugs, or disconnect piping.
- Never operate a pump without a properly installed coupling guard.

Hazardous liquids

The product is designed for use in liquids that can be hazardous to your health. Observe these rules when you work with the product:

- Make sure that all personnel who work with biologically hazardous liquids are vaccinated against diseases to which they may be exposed.
- Observe strict personal cleanliness.
- A small amount of liquid will be present in certain areas like the seal chamber.

Wash the skin and eyes

1. Follow these procedures for chemicals or hazardous fluids that have come into contact with your eyes or your skin:

Condition	Action
Chemicals or hazardous fluids in eyes	1. Hold your eyelids apart forcibly with your fingers. 2. Rinse the eyes with eyewash or running water for at least 15 minutes. 3. Seek medical attention.
Chemicals or hazardous fluids on skin	1. Remove contaminated clothing. 2. Wash the skin with soap and water for at least 1 minute. 3. Seek medical attention, if necessary.

Ex-approved products

Follow these special handling instructions if you have an Ex-approved unit.

Personnel requirements

These are the personnel requirements for Ex-approved products in potentially explosive atmospheres:

- All work on the product must be carried out by certified electricians and ITT-authorized mechanics. Special rules apply to installations in explosive atmospheres.
- All users must know about the risks of electric current and the chemical and physical characteristics of the gas, the vapor, or both present in hazardous areas.
- Any maintenance for Ex-approved products must conform to international and national standards (for example, IEC/EN 60079-17).

ITT disclaims all responsibility for work done by untrained and unauthorized personnel.

Product and product handling requirements

These are the product and product handling requirements for Ex-approved products in potentially explosive atmospheres:

- Only use the product in accordance with the approved motor data.
- The Ex-approved product must never run dry during normal operation. Dry running during service and inspection is only permitted outside the classified area.
- Before you start work on the product, make sure that the product and the control panel are isolated from the power supply and the control circuit, so they cannot be energized.
- Do not open the product while it is energized or in an explosive gas atmosphere.
- Make sure that thermal contacts are connected to a protection circuit according to the approval classification of the product, and that they are in use.
- Intrinsically safe circuits are normally required for the automatic level-control system by the level regulator if mounted in zone 0.
- The yield stress of fasteners must be in accordance with the approval drawing and the product specification.
- Do not modify the equipment without approval from an authorized ITT representative.
- Only use parts that are provided by an authorized ITT representative.

Product approval standards

Regular standards

All standard products are approved according to CSA standards in Canada and UL standards in USA. The drive unit degree of protection follows IP68. See the nameplate for maximum submersion, according to standard IEC 60529.

All electrical ratings and performance of the motors comply with IEC 600341.

Explosion-proofing standards

All explosion-proof products for use in explosive atmospheres are designed in compliance with one or more of the following approvals:

- EN, ATEX Directive 94/9/EC
- FM According to NEC
  - Class 1 Div 1 Groups “C”, and “D”
  - Class 2 Div 1 Groups “E”, “F”, and “G”
  - Class 3 Div 1 Hazardous Locations

ATEX/IECEx:

- Group: IIC

- Category: Ex ia
- Temperature Class: T4 (for ambients up to 100ºC)
- ATEX Marking: Ex II 1 G

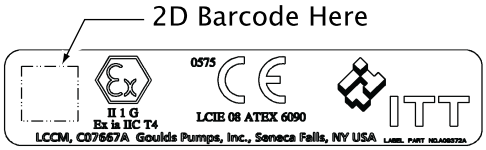

CSA certification

Intrinsically safe for:

- Class I, Div. 1, Groups A, B, C, D
- Class II, Div. 1, Groups E, F, G
- Class III
- Certified to Canadian and US requirements

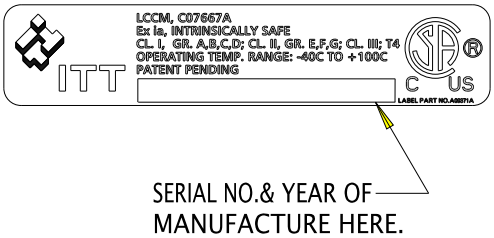

Product warranty

Coverage

ITT undertakes to remedy faults in products from ITT under these conditions:

- The faults are due to defects in design, materials, or workmanship.
- The faults are reported to an ITT representative within the warranty period.
- The product is used only under the conditions described in this manual.
- The monitoring equipment incorporated in the product is correctly connected and in use.
- All service and repair work is done by ITT-authorized personnel.
- Genuine ITT parts are used.
- Only Ex-approved spare parts and accessories authorized by ITT are used in Ex-approved products.

Limitations

The warranty does not cover faults caused by these situations:

- Deficient maintenance
- Improper installation
- Modifications or changes to the product and installation made without consulting ITT
- Incorrectly executed repair work
- Normal wear and tear

ITT assumes no liability for these situations:

- Bodily injuries
- Material damages
- Economic losses

Warranty claim

ITT products are high-quality products with expected reliable operation and long life. However, should the need arise for a warranty claim, then contact your ITT representative.

Transportation and Storage

Inspect the delivery

Inspect the package

1. Inspect the package for damaged or missing items upon delivery.
2. Note any damaged or missing items on the receipt and freight bill.
3. File a claim with the shipping company if anything is out of order.
   If the product has been picked up at a distributor, make a claim directly to the distributor.

Inspect the unit

1. Remove packing materials from the product.
   Dispose of all packing materials in accordance with local regulations.
2. Inspect the product to determine if any parts have been damaged or are missing.
3. If applicable, unfasten the product by removing any screws, bolts, or straps.
   For your personal safety, be careful when you handle nails and straps.
4. Contact your sales representative if anything is out of order.

Transportation guidelines

Pump handling

WARNING:
- Make sure that the unit cannot roll or fall over and injure people or damage property.
- These pumps might use carbon or ceramic silicon carbide components. Do not drop the pump or subject it to shock loads as this can damage the internal ceramic components.

NOTICE:
Use a forklift truck or an overhead crane with sufficient capacity to move the pallet with the pump unit on top. Failure to do so can result in equipment damage.

Lifting methods

WARNING:
- All lifting must be done in compliance with all applicable regulations/standards.
- Assembled units and their components are heavy. Failure to properly lift and support this equipment can result in serious physical injury and/or equipment damage. Lift equipment only at the specifically identified lifting points. Lifting devices such as hoist rings, shackles, slings, and spreaders must be rated, selected, and used for the entire load being lifted.
- Assembled units and their components are heavy. Failure to properly lift and support this equipment can result in serious physical injury and/or equipment damage. Lift equipment only at the specifically identified lifting points. Lifting devices such as eyebolts, slings, and spreaders must be rated, selected, and used for the entire load being lifted.
- Crush hazard. The unit and the components can be heavy. Use proper lifting methods and wear steel-toed shoes at all times.
- Do not attach sling ropes to shaft ends.

Table 1: Methods

Pump type	Lifting method
A bare pump without lifting handles	Use a suitable sling attached properly to solid points like the casing, the flanges, or the frames.
A bare pump with lifting handles	Lift the pump by the handles.
A base-mounted pump	Use slings under the pump casing and the drive unit, or under the base rails.

Pump type	Lifting method
Mounted on top of a Polyshield ANSI Combo	See separate information regarding the Polyshield ANSI Combo.

Examples

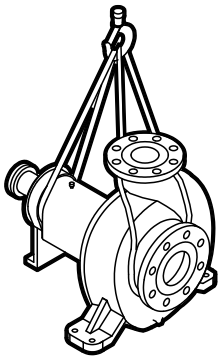

Figure 1: Example of a proper lifting method

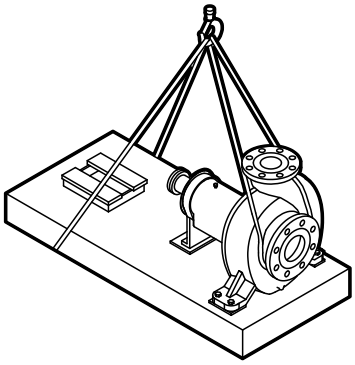

NOTICE:
Do not use this lifting method to lift a Polyshield ANSI Combo with the pump and motor mounted. Doing so may result in equipment damage.

Figure 2: Example of a proper lifting method

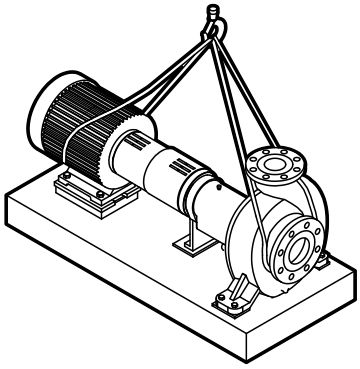

NOTICE:
Do not use this lifting method to lift a Polyshield ANSI Combo with the pump and motor mounted. Doing so may result in equipment damage.

Figure 3: Example of a proper lifting method

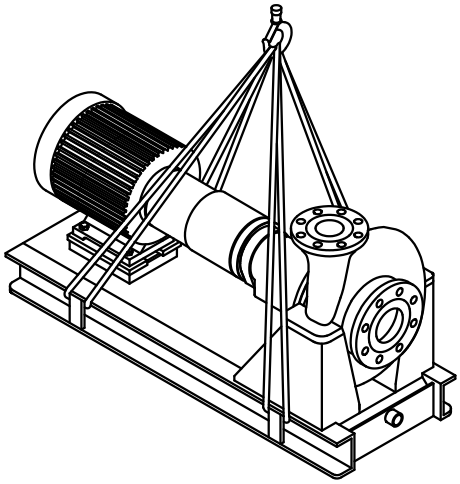

Figure 4: Example of a proper lifting method

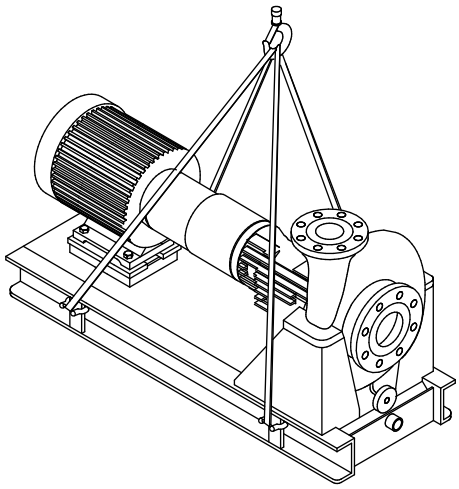

Figure 5: Example of a proper lifting method

NOTICE:
When lifting a unit that does not have a way to secure the strap on the suction flange, you must secure the strap around the frame adapter. Failure to do so may result in equipment damage.

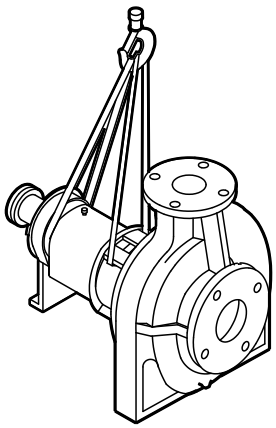

Figure 6: Example of a proper lifting method with a strap secured around the frame adapter

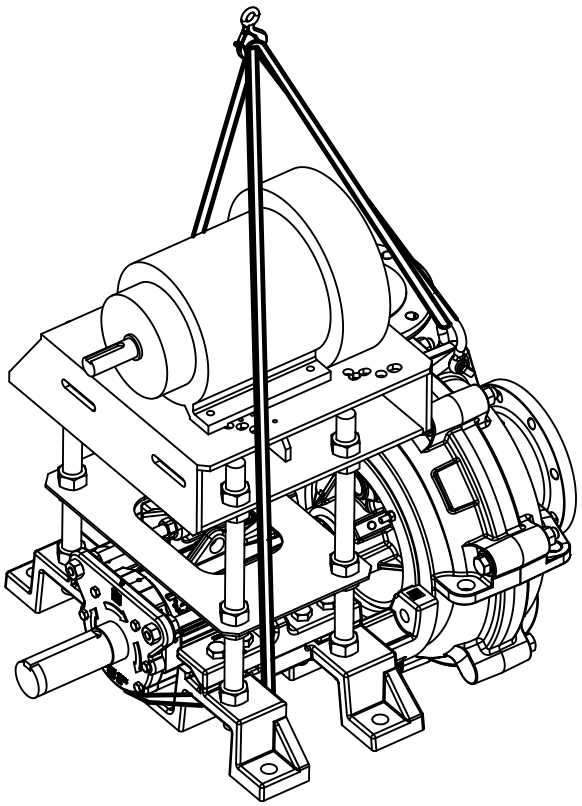

Figure 7: Example of offset overhead motor mount pump proper lifting method

Storage guidelines

Pump storage requirements

Storage requirements depend on the amount of time that you store the unit. The normal packaging is designed only to protect the unit during shipping.

Length of time in storage	Storage requirements
Upon receipt/short-term (less than six months)	• Store in a covered and dry location. • Store the unit free from dirt and vibrations.
Long-term (more than six months)	• Store in a covered and dry location. • Store the unit free from heat, dirt, and vibrations. • Rotate the shaft by hand several times at least every three months.

NOTICE:
Risk of damage to the mechanical seal or shaft sleeve on units supplied with cartridge mechanical seals. Make sure to install and tighten the centering clips and loosen the set screws in the seal locking ring.

Treat bearing and machined surfaces so that they are well preserved. Refer to drive unit and coupling manufacturers for their long-term storage procedures.

You can purchase long-term storage treatment with the initial unit order or you can purchase it and apply it after the units are already in the field. Contact your local ITT sales representative.

Frostproofing

Table 2: Situations when the pump is or is not frostproof

Situation	Condition
Operating	The pump is frostproof.
Immersed in a liquid	The pump is frostproof.
Lifted out of a liquid into a temperature below freezing	The impeller might freeze.

Product Description

General description 3196

The 3196 is a horizontal overhung, open impeller, centrifugal pump. This pump is ANSI B73.1 compliant.
The model is based on 5 power ends and 29 hydraulic sizes.

Figure 8: 3196 pump

This table shows the number of hydraulic sizes available for each drive-unit size group.

Drive-unit size group	Number of hydraulic sizes
STi	5
MTi	15
LTi	15
XLT-i	5
i-17	4

Part description 3196

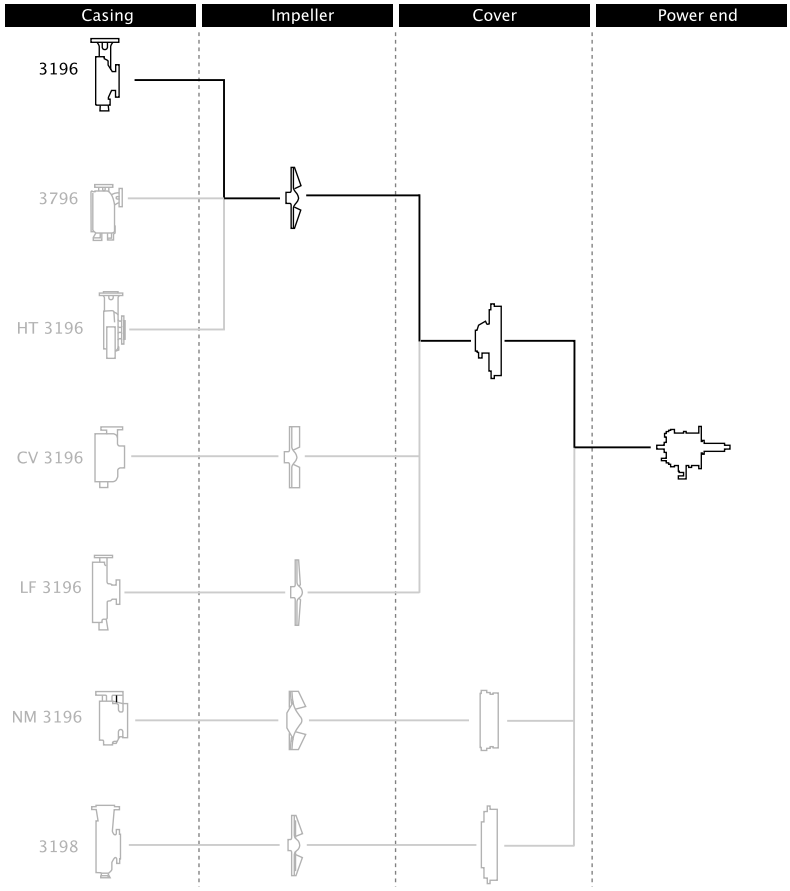

Figure 9: 3196 part description

Table 3: Casing

This table describes the pump casing parts.

Part	Description
Discharge	Top-centerline
Casing ventilation	Self venting
Gasket	Fully confined
Mounting method	Integral foot support for maximum resistance to misalignment due to piping loads.
Standard flange	ANSI flat-faced serrated flange
Optional flanges	One of the following flanges can be used: • ANSI class 150 raised-face serrated flange • ANSI class 300 flat-face serrated flange • ANSI class 300 raised-face serrated flange

Impeller

The impeller is

- fully open
- screwed onto the shaft

The threads are sealed from the pumped liquid by a Teflon O-ring for the 3196.

Cover

Standard seal

- The 3196 is available with a stuffing-box cover designed for a packing and a BigBore or a TaperBore PLUS seal chamber.

Optional seal

- a dynamic seal is available which uses a repeller to pump liquid out of the stuffing box while the pump operates. A static seal prevents leakage when the pump is shut down.

Table 4: Power end

This table describes the main parts of the power end.

Part	Description
Frame adapter	The ductile iron frame adapter has • a machined rabbet fitted to the seal chamber/ stuffing box cover • a precision dowel pin fitted to the bearing frame.

Power end	• Flood-oil lubrication is standard.
	• No machining is required to convert from oil to grease or oil-mist lubrication. Regreasable bearings and oil-mist lubrication are optional.
	• The oil level is checked through a sight glass.
	• The power end is sealed with labyrinth seals.
	• The power end is made in the following sizes:
	  • STi
	  • MTi
	  • LTi
	  • XLT-i
	  • i-17

Shaft	The shaft is available with or without a sleeve.
Bearings	The inboard bearing • carries only radial loads. • is free to float axially in the frame. • is a single-row deep-groove ball bearing The outboard bearing • is shouldered and locked to the shaft and housing to enable it to carry radial and thrust loads. • is a double-row angular-contact bearing, except for the LTi which uses a pair of single-row angular-contact ball bearings mounted back-to-back.

General description i-ALERT™ Condition Monitor

Description

The i-ALERT Condition Monitor is a compact, battery-operated monitoring device that continuously measures the vibration and temperature of the pump power end. The condition monitor uses blinking red LEDs to alert the pump operator when the pump exceeds pre-set vibration and temperature limits. This allows the pump operator to make changes to the process or the pump before a catastrophic failure occurs. The condition monitor is also equipped with a single green LED to indicate when it is operational and has sufficient battery life.

Software License Agreement

BY USING THE i-Alert™ CONDITION MONITOR, YOU AGREE TO BE BOUND BY THE TERMS AND CONDITIONS OF THE FOLLOWING LICENSE AGREEMENT. PLEASE READ THIS AGREEMENT CAREFULLY.

ITT Corporation and its subsidiaries, affiliates, either directly, or through its authorized sublicensees ("ITT") grants you a limited, non-exclusive license to use the software embedded in this device ("Software") in binary executable form in the normal operation of the i-Alert™ condition monitor for monitoring the condition of an Goulds Pump Inc. model. Title, ownership rights, and intellectual property rights in and to the Software remain in ITT or its third-party providers. You agree that this license agreement does not need to be signed for it to take effect.

You acknowledge that this Software is the property of ITT and is protected under United States of America copyright laws and international copyright treaties. You further acknowledge that the structure, organization, and code of the Software are valuable trade secrets of ITT and/or its third-party providers and that the Software in source code form remains a valuable trade

secret of ITT. You agree not to decompile, disassemble, modify, reverse assemble, reverse engineer, or reduce to human readable form the Software or any part thereof or create any derivative works based on the Software. You agree not to export or re-export the Software to any country in violation of the export control laws of the United States of America.

Alarm mode

The condition monitor enters alarm mode when either vibration or temperature limits are exceeded over two consecutive readings within a ten minute period. Alarm mode is indicated with two red flashing LEDs within two second intervals.

Temperature and vibration limits

Variable	Limit
Temperature	195°F (91°C)
Vibration	100% increase over the baseline level

Battery life

The i-ALERT Condition Monitor battery is not replaceable. You must replace the entire unit once the battery runs out of power.

The battery life is not covered as part of the standard five-year pump warranty.

This table shows the average condition monitor battery life under normal and alarm-mode operating conditions.

Condition monitor operational state	Battery life
Normal operating and environmental conditions	Three to five years
Alarm mode	One year

Nameplate information

Important information for ordering

Every pump has nameplates that provide information about the pump. The nameplates are located on the casing and the bearing frame.

When you order spare parts, identify this pump information:

- Model
- Size
- Serial number
- Item numbers of the required parts

Refer to the nameplate on the pump casing for most of the information. See Parts List for item numbers.

Nameplate types

Nameplate	Description
Pump casing	Provides information about the hydraulic characteristics of the pump. The formula for the pump size is: Discharge x Suction - Nominal Maximum Impeller Diameter in inches. (Example: 2x3-8)
Bearing frame	Provides information about the lubrication system used.
ATEX	If applicable, your pump unit might have an ATEX nameplate affixed to the pump, the baseplate, or the discharge head. The nameplate provides information about the ATEX specifications of this pump.
IECEx	If applicable, your pump unit might have the following IECEx nameplate affixed to the pump and/or baseplate. The nameplate provides information about the IECEx specifications of this pump.

Nameplate on the pump casing using English units

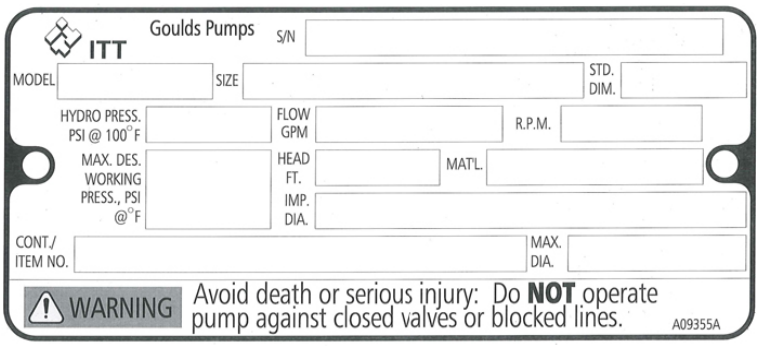

Table 5: Explanation of nameplate on the pump casing

Nameplate field	Explanation
IMPLR. DIA.	Impeller diameter, in inches
MAX. DIA.	Maximum impeller diameter, in inches
GPM	Rated pump flow, in gallons per minute
FT HD	Rated pump head, in feet
RPM	Rated pump speed, revolutions per minute
MOD.	Pump model
SIZE	Size of the pump
STD. NO.	ANSI standard designation
MAT L. CONST.	Material of which the pump is constructed
SER. NO.	Serial number of the pump
MAX DSGN PSI @ 100ºF	Maximum pressure at 100ºF according to the pump design

Nameplate on the pump casing using metric units

Table 6: Explanation of the nameplate on the pump casing

Nameplate field	Explanation
IMPLR. DIA.	Impeller diameter
MAX. DIA.	Maximum impeller diameter
M^3/HR	Rated pump flow, in cubic meters per hour
M HD	Rated pump head, in meters
RPM	Rated pump speed, in revolutions per minute
MOD.	Pump model
SIZE	Size of the pump
STD. NO.	ANSI standard designation
MAT L. CONST	Material of which the pump is constructed
SER. NO.	Serial number of the pump
MAX. DSGN KG/CM^3 @ 20°C	Kilograms per cubic centimeter at 20°C

Nameplate on the bearing frame

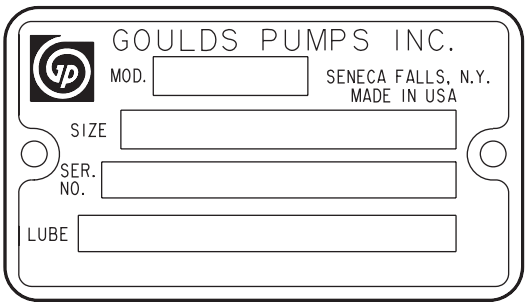

Table 7: Explanation of the nameplate on the bearing frame

Nameplate field	Explanation
BRG. O. B.	Outboard bearing designation
BRG. I. B.	Inboard bearing designation
S/N	Serial number of the pump
LUBE	Lubricant, oil or grease

ATEX nameplate

Nameplate field	Explanation
II	Group 2
2	Category 2
G/D	Pump can be used when gas and dust are present
T4	Temperature class

NOTICE:
Make sure that the code classifications on the pump are compatible with the specific environment in which you plan to install the equipment. If they are not compatible, do not operate the equipment and contact your ITT representative before you proceed.

Installation

Preinstallation

Precautions

WARNING:
- When installing in a potentially explosive environment, make sure that the motor is properly certified.
- You must earth (ground) all electrical equipment. This applies to the pump equipment, the driver, and any monitoring equipment. Test the earth (ground) lead to verify that it is connected correctly.
- Electrical Connections must be made by certified electricians in compliance with all international, national, state, and local rules.

NOTICE:
Supervision by an authorized ITT representative is recommended to ensure proper installation. Failure to do so may result in equipment damage or decreased performance.

Pump location guidelines

WARNING:
Assembled units and their components are heavy. Failure to properly lift and support this equipment can result in serious physical injury and/or equipment damage. Lift equipment only at the specifically identified lifting points. Lifting devices such as eyebolts, slings, and spreaders must be rated, selected, and used for the entire load being lifted.

Guideline	Explanation/comment
Keep the pump as close to the liquid source as practically possible.	This minimizes the friction loss and keeps the suction piping as short as possible.
Make sure that the space around the pump is sufficient.	This facilitates ventilation, inspection, maintenance, and service.
If you require lifting equipment such as a hoist or tackle, make sure that there is enough space above the pump.	This makes it easier to properly use the lifting equipment and safely remove and relocate the components to a safe location.
Protect the unit from weather and water damage due to rain, flooding, and freezing temperatures.	This is applicable if nothing else is specified.
Do not install and operate the equipment in closed systems unless the system is constructed with properly-sized safety devices and control devices.	Acceptable devices: • Pressure relief valves • Compression tanks • Pressure controls • Temperature controls • Flow controls If the system does not include these devices, consult the engineer or architect in charge before you operate the pump.
Take into consideration the occurrence of unwanted noise and vibration.	The best pump location for noise and vibration absorption is on a concrete floor with subsoil underneath.
If the pump location is overhead, undertake special precautions to reduce possible noise transmission.	Consider a consultation with a noise specialist.

Foundation requirements

Requirements

- The foundation must be able to absorb any type of vibration and form a permanent, rigid support for the unit.
- The location and size of the foundation bolt holes must match those shown on the assembly drawing provided with the pump data package.
- The foundation must weigh between two and three times the weight of the pump.

- Provide a flat, substantial concrete foundation in order to prevent strain and distortion when you tighten the foundation bolts.
- Sleeve-type and J-type foundation bolts are most commonly used. Both designs allow movement for the final bolt adjustment.

Sleeve-type bolts

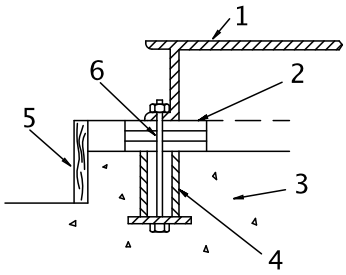

1. Baseplate
2. Shims or wedges
3. Foundation
4. Sleeve
5. Dam
6. Bolt

J-type bolts

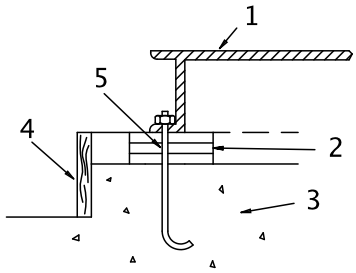

1. Baseplate
2. Shims or wedges
3. Foundation
4. Dam
5. Bolt

Baseplate-mounting procedures

Prepare the baseplate for mounting

1. Remove all the attached equipment from the baseplate.
2. Clean the underside of the baseplate completely.
3. If applicable, coat the underside of the baseplate with an epoxy primer.
   Use an epoxy primer only if you used an epoxy-based grout.
4. Remove the rust-proofing coat from the machined mounting pads using an appropriate solvent.
5. Remove water and debris from the foundation-bolt holes.

Install the baseplate using shims or wedges

Required tools:

- Two sets of shims or wedges for each foundation bolt
- Two machinist's levels

- Baseplate-leveling worksheet

This procedure is applicable to cast iron and fabricated steel baseplates.

1. If you use sleeve-type bolts, fill the bolt sleeves with packing material or rags to prevent grout from entering the bolt holes.
2. Put the sets of wedges or shims on each side of each foundation bolt.
   The sets of wedges should have a height of between 0.75 in. (19 mm) and 1.50 in. (38 mm).

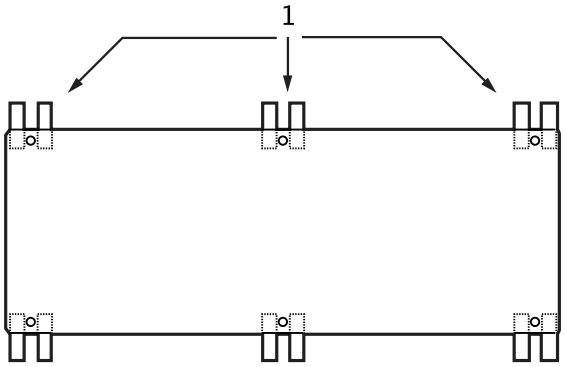

1. Shims or wedges

Figure 10: Top view

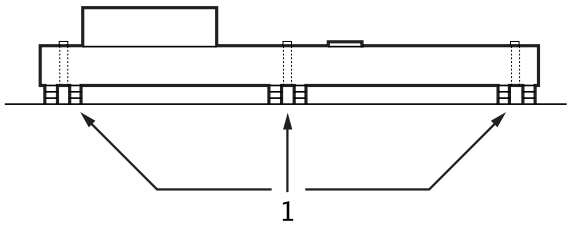

1. Shims or wedges

Figure 11: Side view

3. Lower the baseplate carefully onto the foundation bolts.
4. Put the machinist's levels across the mounting pads of the driver and the mounting pads of the pump.

NOTICE:
Remove all dirt from the mounting pads in order to make sure that you achieve the correct leveling. Failure to do so can result in equipment damage or decreased performance.

---

5. Level the baseplate both lengthwise and across by adding or removing shims or moving the wedges.
   These are the leveling tolerances:
   - A maximum difference of 0.125 in. (3.2 mm) lengthwise
   - A maximum difference of 0.059 in. (1.5 mm) across

   You can use the baseplate-leveling worksheet when you take the readings.
6. Hand-tighten the nuts for the foundation.

Install the baseplate using jackscrews

Tools required:

- Anti-seize compound
- Jackscrews
- Bar stock
- Two machinist's levels

- Baseplate-leveling worksheet

This procedure is applicable to the feature-fabricated steel baseplate and the advantage base baseplate.

1. Apply an anti-seize compound on the jackscrews.
   The compound makes it easier to remove the screws after you grout.
2. Lower the baseplate carefully onto the foundation bolts and perform these steps:
   a) Cut the plates from the bar stock and chamfer the edges of the plates in order to reduce stress concentrations.
   b) Put the plates between the jackscrews and the foundation surface.
   c) Use the four jackscrews in the corners in order to raise the baseplate above the foundation.
      Make sure that the distance between the baseplate and the foundation surface is between 0.75 in. (19 mm) and 1.50 in. (38 mm).
   d) Make sure that the center jackscrews do not touch the foundation surface yet.

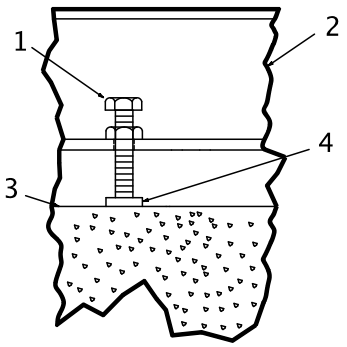

   1. Jackscrew
   2. Baseplate
   3. Foundation
   4. Plate

3. Level the driver mounting pads:

NOTICE:
Remove all dirt from the mounting pads in order to make sure that you achieve the correct leveling. Failure to do so can result in equipment damage or decreased performance.

---

   a) Put one machinist's level lengthwise on one of the two pads.
   b) Put the other machinist's level across the ends of the two pads.

c) Level the pads by adjusting the four jackscrews in the corners.
Make sure that the machinist's level readings are as close to zero as possible, both lengthwise and across.
Use the baseplate-leveling worksheet when you take the readings.

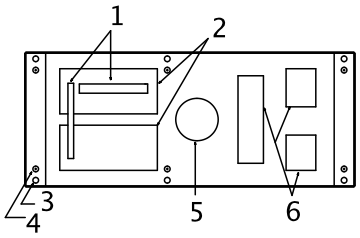

1. Machinist's levels
2. Driver's mounting pads
3. Foundation bolts
4. Jackscrews
5. Grout hole
6. Pump's mounting pads

4. Turn the center jackscrews down so that they rest on their plates on the foundation surface.
5. Level the pump mounting pads:

NOTICE:
Remove all dirt from the mounting pads in order to make sure that you achieve the correct leveling. Failure to do so can result in equipment damage or decreased performance.

---

a) Put one machinist's level lengthwise on one of the two pads.
b) Put the other level across the center of the two pads.
c) Level the pads by adjusting the four jackscrews in the corners.
Make sure that the machinist's level readings are as close to zero as possible, both lengthwise and across.

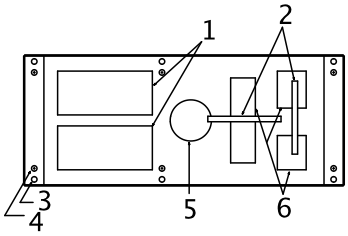

1. Driver's mounting pads
2. Machinist's levels
3. Foundation bolts
4. Jackscrews
5. Grout hole
6. Pump's mounting pads

6. Hand-tighten the nuts for the foundation bolts.
7. Check that the driver's mounting pads are level and adjust the jackscrews and the foundation bolts if necessary.
The correct level measurement is a maximum of 0.002 in./ft (0.0167 mm/m).

Install the baseplate using spring mounting

NOTICE:
The spring-mounted baseplate is designed only to support piping loads from thermal expansion. You must support the suction and discharge piping individually. Failure to do so may result in equipment damage.

The foundation pads are not provided with the baseplate. Make sure that the foundation pads are 316 stainless-steel plates, which have a 16-20 micro-inch surface finish.

Before you start this procedure, make sure that the foundation pads are correctly installed on the foundation/floor (see the manufacturer's instructions).

1. Put the baseplate on a support above the foundation/floor.
   Make sure that there is enough space between the baseplate and the foundation/floor in order to install the spring assemblies.
2. Install the lower part of the spring assembly:
   a) Screw the lower jam nut onto the spring stud.
   b) Screw the lower adjusting nut onto the spring-stud, on top of the jam nut.
   c) Set the lower adjusting nut to the correct height.
      The correct height depends on the required distance between the foundation/floor and the baseplate.
   d) Put a washer, a follower, a spring, and one more follower onto the lower adjusting nut.
3. Install the spring assembly on the baseplate:
   a) Insert the spring assembly into the baseplate's anchorage hole from below.
   b) Put a follower, a spring, another follower, and a washer onto the spring stud.
   c) Fasten the spring assembly with the upper adjusting nut by hand.
4. Thread the upper jam nut onto the spring stud by hand.
5. Repeat steps 2 through 4 for all the spring assemblies.
6. Lower the baseplate so that the spring assemblies fit into the foundation pads.
7. Level the baseplate and make the final height adjustments:
   a) Loosen the upper jam nuts and adjusting nuts.
   b) Adjust the height and level the baseplate by moving the lower adjusting nuts.
   c) When the baseplate is level, tighten the top adjusting nuts so that the top springs are not loose in their followers.
8. Fasten the lower and upper jam nuts on each spring assembly.

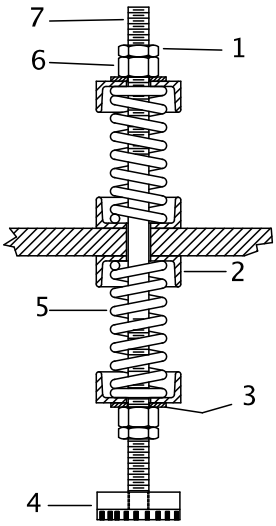

1. Upper jam nut
2. Follower
3. Washer
4. Foundation pads
5. Spring
6. Upper adjusting nut
7. Spring stud

Figure 12: Example of an installed spring assembly

Install the baseplate using stilt mounting

NOTICE:
The stilt-mounted baseplate is not designed to support static piping loads. Make sure to individually support the suction and discharge piping. Failure to do so may result in equipment damage.

1. Put the baseplate on a support above the foundation/floor.
   Make sure that there is enough space between the baseplate and the foundation/floor to install the stilts.
2. Install the lower part of the stilt assembly:
   a) Screw the lower jam nut and adjusting nut onto the stilt.
   b) Set the lower adjusting nut to the correct height.
      The correct height depends on the required distance between the foundation/floor and the baseplate.
   c) Put a washer onto the lower adjusting- nut.
3. Install the stilt assembly on the baseplate:
   a) Insert the stilt assembly into the baseplate's anchorage hole from below.
   b) Put a washer onto the stilt.
   c) Fasten the stilt assembly with the upper adjusting nut by hand.
4. Screw the upper jam nut onto the stilt by hand.
5. Repeat steps 2 through 4 for all the stilt assemblies.
6. Lower the baseplate so that the stilts fit into the foundation cups.
7. Level the baseplate and make the final height adjustments:
   a) Loosen the upper jam nuts and adjusting nuts.
   b) Adjust the height and level the baseplate by moving the lower adjusting nuts.
   c) When the baseplate is level, tighten the top adjusting nuts.
8. Fasten the lower and upper jam nuts on each stilt.

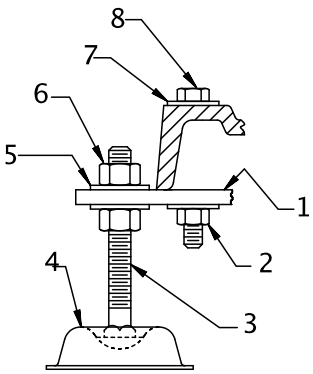

1. Mounting plate
2. Mounting nut
3. Stilt bolt
4. Foundation cups
5. Washer
6. Upper adjustment nut
7. Mounting washer
8. Mounting bolt

Figure 13: Example of an installed stilt assembly

Baseplate-leveling worksheet

Level measurements

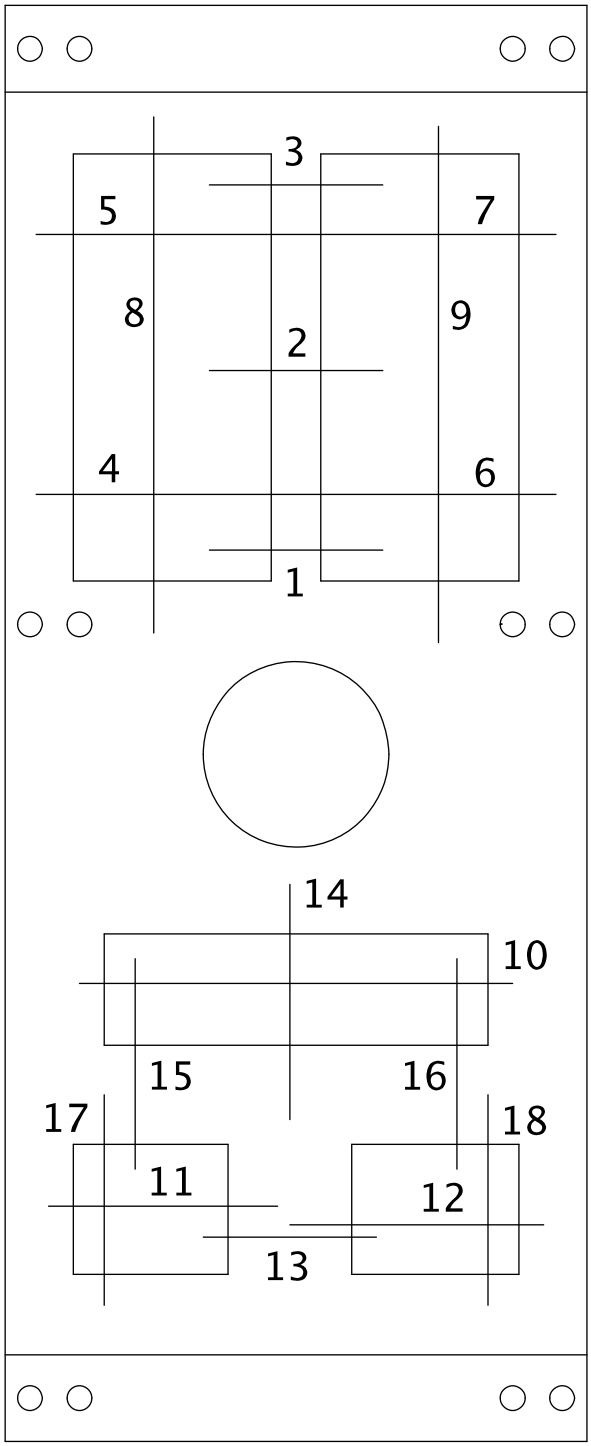

1)_____

2)_____

3)_____

4)_____

5)_____

6)_____

7)_____

8)_____

9)_____

10)_____

11)_____

12)_____

13)_____

14)_____

15)_____

16)_____

17)_____

18)_____

Install the pump, driver, and coupling

1. Mount and fasten the pump on the baseplate. Use applicable bolts.
2. Mount the driver on the baseplate. Use applicable bolts and hand tighten.
3. Install the coupling.
   See the installation instructions from the coupling manufacturer.

Pump-to-driver alignment

Precautions

WARNING:

- Follow shaft alignment procedures in order to prevent catastrophic failure of drive components or unintended contact of rotating parts. Follow the coupling installation and operation procedures from the coupling manufacturer.
- Always disconnect and lock out power to the driver before you perform any installation or maintenance tasks. Failure to disconnect and lock out driver power will result in serious physical injury.
  - Electrical connections must be made by certified electricians in compliance with all international, national, state, and local rules.
  - Refer to driver/coupling/gear manufacturers installation and operation manuals (IOM) for specific instructions and recommendations.

NOTICE:
Proper alignment is the responsibility of the installer and the user of the unit. Check the alignment of frame-mounted units before you operate the unit. Failure to do so can result in equipment damage or decreased performance.

Alignment checks

When to perform alignment checks

You must perform alignment checks under these circumstances:

- The process temperature changes.
- The piping changes.
- The pump has been serviced.

Types of alignment checks

Type of check	When it is used
Initial alignment (cold alignment) check	Prior to operation when the pump and the driver are at ambient temperature.
Final alignment (hot alignment) check	After operation when the pump and the driver are at operating temperature.

Initial alignment (cold alignment) checks

When	Why
Before you grout the baseplate	This ensures that alignment can be accomplished.
After you grout the baseplate	This ensures that no changes have occurred during the grouting process.
After you connect the piping	This ensures that pipe strains have not altered the alignment. If changes have occurred, you must alter the piping to remove pipe strains on the pump flanges.

Final alignment (hot alignment) checks

When	Why
After the first run	This ensures correct alignment when both the pump and the driver are at operating temperature.

When	Why
Periodically	This follows the plant operating procedures.

Permitted indicator values for alignment checks

NOTICE:
The specified permitted reading values are valid only at operating temperature. For cold settings, other values are permitted. You must use the correct tolerances. Failure to do so can result in misalignment and reduced pump reliability.

When dial indicators are used to check the final alignment, the pump and drive unit are correctly aligned when these conditions are true:

- The total indicator runout is a maximum of 0.002 in. (0.05 mm) at operating temperature.
- The tolerance of the indicator is 0.0005 in./in. (0.0127 mm/mm) of indicator separation at operating temperature.

Cold settings for parallel vertical alignment

Introduction

This section shows the recommended preliminary (cold) settings for electric motor-driven pumps based on different temperatures of pumped fluid. Consult driver manufacturers for recommended cold settings for other types of drivers such as steam turbines and engines.

Recommended settings for models 3196, CV 3196, and LF 3196

Pumpage temperature	Recommended setting
50°F (10°C)	0.002 in. (0.05 mm), low
150°F (65°C)	0.001 in. (0.03 mm), high
250°F (120°C)	0.005 in. (0.12 mm), high
350°F (175°C)	0.009 in. (0.23 mm), high
450°F (218°C)	0.013 in. (0.33 mm), high
550°F (228°C)	0.017 in. (0.43 mm), high
650°F (343°C)	0.021 in. (0.53 mm), high
700°F (371°C)	0.023 in. (0.58 mm), high

Alignment measurement guidelines

Guideline	Explanation
Rotate the pump coupling half and the driver coupling half together so that the indicator rods have contact with the same points on the driver coupling half.	This prevents incorrect measurement.
Move or shim only the driver in order to make adjustments.	This prevents strain on the piping installations.
Make sure that the hold-down bolts for the driver feet are tight when you take indicator measurements.	This keeps the driver stationary since movement causes incorrect measurement.
Make sure that the hold-down bolts for the driver feet are loose before you make alignment corrections.	This makes it possible to move the driver when you make alignment corrections.
Check the alignment again after any mechanical adjustments.	This corrects any misalignments that an adjustment may have caused.

Attach the dial indicators for alignment

You must have two dial indicators in order to complete this procedure.

1. Attach two dial indicators on the pump coupling half (X):
   a) Attach one indicator (P) so that the indicator rod comes into contact with the perimeter of the driver coupling half (Y).
   This indicator is used to measure parallel misalignment.

b) Attach the other indicator (A) so that the indicator rod comes into contact with the inner end of the driver coupling half.
This indicator is used to measure angular misalignment.

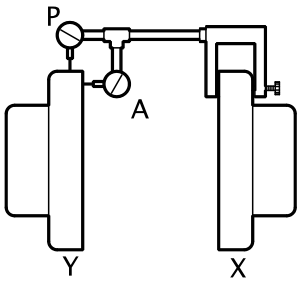

2. Rotate the pump coupling half (X) in order to check that the indicators are in contact with the driver coupling half (Y) but do not bottom out.
3. Adjust the indicators if necessary.

Pump-to-driver alignment instructions

Perform angular alignment for a vertical correction

1. Set the angular alignment indicator to zero at the top-center position (12 o'clock) of the driver coupling half (Y).
2. Rotate the indicator to the bottom-center position (6 o'clock).
3. Record the indicator reading.

When the reading value is...	Then...
Negative	The coupling halves are farther apart at the bottom than at the top. Perform one of these steps: • Add shims in order to raise the feet of the driver at the shaft end. • Remove shims in order to lower the feet of the driver at the other end.
Positive	The coupling halves are closer at the bottom than at the top. Perform one of these steps: • Remove shims in order to lower the feet of the driver at the shaft end. • Add shims in order to raise the feet of the driver at the other end.

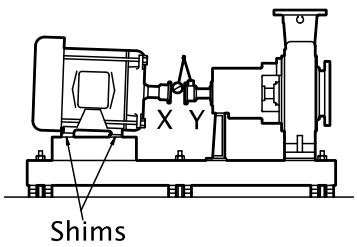

Figure 14: Side view of an incorrect vertical alignment

4. Repeat the previous steps until the permitted reading value is achieved.

Perform angular alignment for a horizontal correction

1. Set the angular alignment indicator (A) to zero on left side of the driver coupling half (Y), 90° from the top-center position (9 o'clock).
2. Rotate the indicator through the top-center position to the right side, 180° from the start position (3 o'clock).
3. Record the indicator reading.

When the reading value is...	Then...
Negative	The coupling halves are farther apart on the right side than the left. Perform one of these steps: • Slide the shaft end of the driver to the left. • Slide the opposite end to the right.
Positive	The coupling halves are closer together on the right side than the left. Perform one of these steps: • Slide the shaft end of the driver to the right. • Slide the opposite end to the left.

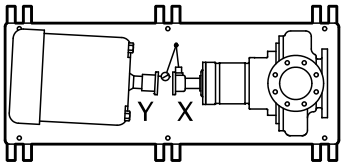

Figure 15: Top view of an incorrect horizontal alignment

4. Repeat the previous steps until the permitted reading value is achieved.

Perform parallel alignment for a vertical correction

Refer to the alignment table in "Permitted indicator values for alignment checks" (see Table of Contents for location of table) for the proper cold alignment value based on the motor temperature rise and the pump operating temperature.

Before you start this procedure, make sure that the dial indicators are correctly set up.

A unit is in parallel alignment when the parallel indicator (P) does not vary by more than 0.002 in. (0.05 mm) as measured at four points 90° apart at the operating temperature.

1. Set the parallel alignment indicator (P) to zero at the top-center position (12 o'clock) of the driver coupling half (Y).
2. Rotate the indicator to the bottom-center position (6 o'clock).
3. Record the indicator reading.

When the reading value is...	Then...
Negative	The pump coupling half (X) is lower than the driver coupling half (Y). Remove shims of a thickness equal to half of the indicator reading value under each driver foot.
Positive	The pump coupling half (X) is higher than the driver coupling half (Y). Add shims of a thickness equal to half of the indicator reading value to each driver foot.

NOTICE:

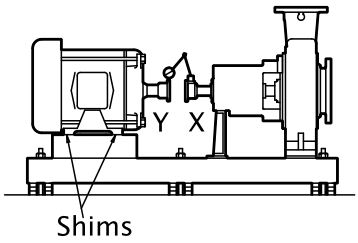

Figure 16: Side view of an incorrect vertical alignment

4. Repeat the previous steps until the permitted reading value is achieved.

NOTICE:
The specified permitted reading values are valid only at operating temperature. For cold settings, other values are permitted. You must use the correct tolerances. Failure to do so can result in misalignment and reduced pump reliability.

Perform parallel alignment for a horizontal correction

A unit is in parallel alignment when the parallel indicator (P) does not vary by more than 0.002 in. (0.05 mm) as measured at four points 90° apart at the operating temperature.

1. Set the parallel alignment indicator (P) to zero on the left side of the driver coupling half (Y), 90° from the top-center position (9 o'clock).
2. Rotate the indicator through the top-center position to the right side, 180° from the start position (3 o'clock).
3. Record the indicator reading.

When the reading value is...	Then...
Negative	The driver coupling half (Y) is to the left of the pump coupling half (X).
Positive	The driver coupling half (Y) is to the right of the pump coupling half (X).

4. Slide the driver carefully in the appropriate direction.

NOTICE: Make sure to slide the driver evenly. Failure to do so can negatively affect horizontal angular correction.

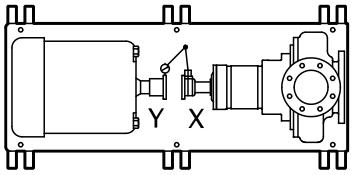

Figure 17: Top view of an incorrect horizontal alignment

5. Repeat the previous steps until the permitted reading value is achieved.

NOTICE:
The specified permitted reading values are valid only at operating temperature. For cold settings, other values are permitted. You must use the correct tolerances. Failure to do so can result in misalignment and reduced pump reliability.

Perform complete alignment for a vertical correction

A unit is in complete alignment when both the angular indicator (A) and the parallel indicator (P) do not vary by more than 0.002 in. (0.05 mm) as measured at four points 90° apart.

1. Set the angular and parallel dial indicators to zero at the top-center position (12 o'clock) of the driver coupling half (Y).
2. Rotate the indicators to the bottom-center position (6 o'clock).
3. Record the indicator readings.
4. Make corrections according to the separate instructions for angular and parallel alignment until you obtain the permitted reading values.

Perform complete alignment for a horizontal correction

A unit is in complete alignment when both the angular indicator (A) and the parallel indicator (P) do not vary by more than 0.002 in. (0.05 mm) as measured at four points 90° apart.

1. Set the angular and parallel dial indicators to zero at the left side of the driver coupling half (Y), 90° from the top-center position (9 o'clock).

2. Rotate the indicators through the top-center position to the right side, 180° from the start position (3 o'clock).
3. Record the indicator readings.
4. Make corrections according to the separate instructions for angular and parallel alignment until you obtain the permitted reading values.

C-face adapter

Intended use

The C-face adapter is a device that attaches the pump to the drive unit to minimize the axial and radial play between the two coupling halves.

Illustration

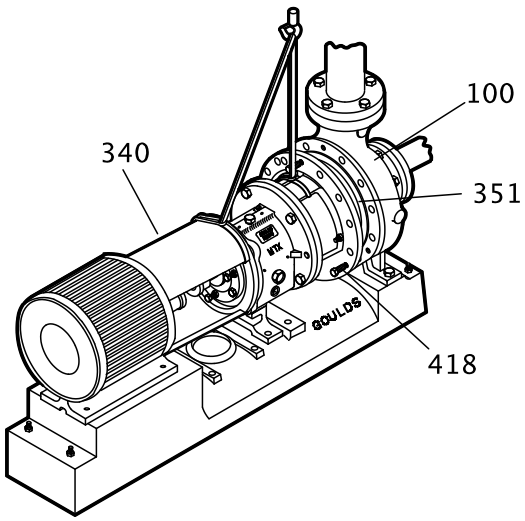

Figure 18: Example of the C-face adapter (340)

Alignment requirements

When you use a C-face adapter, you do not have to align the shaft. The rabbeted fittings of the drive unit to the adapter and the adapter to the bearing frame automatically align the shaft to within the specified limits.

Specified limits

A C-face adapter can attain a nominal alignment of 0.007 in. Total Indicated Runout (T.I.R.). However, because of the stack-up of the machining tolerances of the various parts, the alignment can be as high as 0.015 inches TIR.

If high reliability (with shaft alignments of less than 0.002 in. (0.05mm)) is required for the pump, use a foot-mounted drive unit on a precision-machined baseplate and perform a conventional alignment.

Grout the baseplate

Required equipment:

- Cleaners: Do not use an oil-based cleaner because the grout will not bond to it. See the instructions provided by the grout manufacturer.
- Grout: Non-shrink grout is recommended.

1. Clean all the areas of the baseplate that will come into contact with the grout.
2. Build a dam around the foundation.
3. Thoroughly wet the foundation that will come into contact with the grout.
4. Pour grout through the grout hole into the baseplate up to the level of the dam.

When you pour the grout, remove air bubbles from it by using one of these methods:

- Puddle with a vibrator.
- Pump the grout into place.

5. Allow the grout to set.

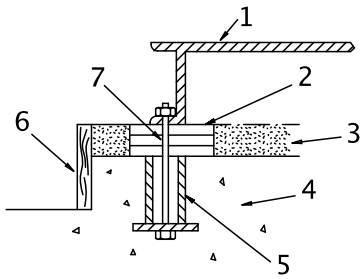

1. Baseplate
2. Shims or wedges
3. Grout
4. Foundation
5. Sleeve
6. Dam
7. Bolt

6. Fill the remainder of the baseplate with grout, and allow the grout to set for at least 48 hours.

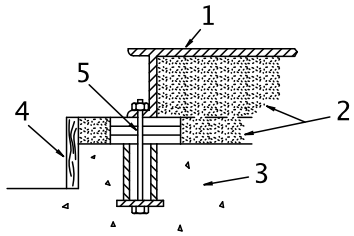

1. Baseplate
2. Grout
3. Foundation
4. Dam
5. Bolt

7. Tighten the foundation bolts.

Piping checklists

General piping checklist

Precautions

CAUTION:

- Never draw piping into place by using force at the flanged connections of the pump. This can impose dangerous strains on the unit and cause misalignment between the pump and driver. Pipe strain adversely affects the operation of the pump, which results in physical injury and damage to the equipment.
- Vary the capacity with the regulating valve in the discharge line. Never throttle the flow from the suction side. This action can result in decreased performance, unexpected heat generation, and equipment damage.

CAUTION:

Piping guidelines

Guidelines for piping are given in the Hydraulic Institute Standards available from the Hydraulic Institute at 9 Sylvan Way, Parsippany, NJ 07054-3802. You must review this document before you install the pump.

Checklist

Check	Explanation/comment	Checked
Check that all piping is supported independently of, and lined up naturally with, the pump flange.	This helps to prevent: • Strain on the pump • Misalignment between the pump and the drive unit • Wear on the pump bearings and the coupling • Wear on the pump bearings, seal, and shafting	
Keep the piping as short as possible.	This helps to minimize friction losses.	
Check that only necessary fittings are used.	This helps to minimize friction losses.	
Do not connect the piping to the pump until: • The grout for the baseplate or sub-base becomes hard. • The hold-down bolts for the pump and the driver are tightened.	—	
Make sure that all the piping joints and fittings are airtight.	This prevents air from entering the piping system or leaks that occur during operation.	
If the pump handles corrosive fluids, make sure that the piping allows you to flush out the liquid before you remove the pump.		
If the pump handles liquids at elevated temperatures, make sure that the expansion loops and joints are properly installed.	This helps to prevent misalignment due to linear expansion of the piping.	

Example: Installation for expansion

Correct	Incorrect
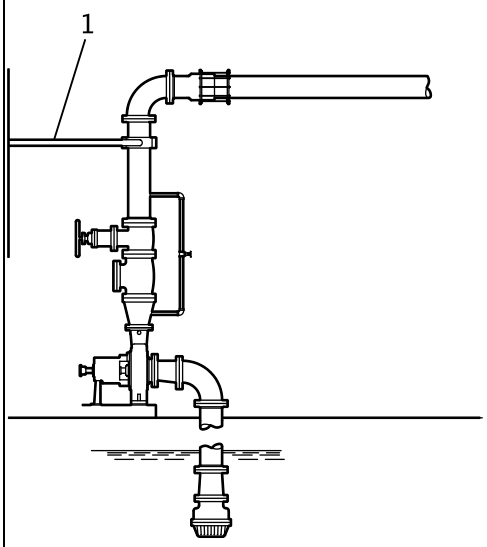 1. Expansion loop/joint	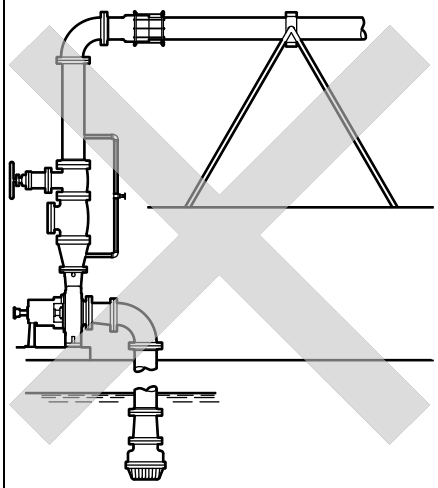

Fastening

WARNING:
- Only use fasteners of the proper size and material.
- Replace all corroded fasteners.
- Make sure that all fasteners are properly tightened and that there are no missing fasteners.

Suction-piping checklist

Performance curve reference

Net positive suction head available ($NPSH_A$) must always exceed NPSH required ($NPSH_R$) as shown on the published performance curve of the pump.

Suction-piping checks

Check	Explanation/comment	Checked
Check that the distance between the inlet flange of the pump and the closest elbow is at least five pipe diameters.	This minimizes the risk of cavitation in the suction inlet of the pump due to turbulence. See the Example sections for illustrations.	
Check that elbows in general do not have sharp bends.	See the Example sections for illustrations.	
Check that the suction piping is one or two sizes larger than the suction inlet of the pump. Install an eccentric reducer between the pump inlet and the suction piping.	The suction piping must never have a smaller diameter than the suction inlet of the pump. See the Example sections for illustrations.	
Check that the eccentric reducer at the suction flange of the pump has the following properties: • Sloping side down • Horizontal side at the top	See the example illustrations.	
When suction strainers or suction bells are used, check that they are at least three times the area of the suction piping.	Suction strainers help to prevent clogging. Mesh holes with a minimum diameter of 1/16 in. (1.6 mm) are recommended.	
If more than one pump operates from the same liquid source, check that separate suction-piping lines are used for each pump.	This recommendation helps you to achieve a higher pump performance.	
If necessary, make sure that the suction piping includes a drain valve and that it is correctly installed.	—	

Liquid source below the pump

Check	Explanation/comment	Checked
Make sure that the suction piping is free from air pockets.	This helps to prevent the occurrence of air and cavitation in the pump inlet.	
Check that the suction piping slopes upwards from the liquid source to the pump inlet.	—	
If the pump is not self-priming, check that a device for priming the pump is installed.	Use a foot valve with a diameter that is at least equivalent to the diameter of the suction piping.	

Liquid source above the pump

Check	Explanation/comment	Checked
Check that an isolation valve is installed in the suction piping at a distance of at least two times the pipe diameter from the suction inlet.	This permits you to close the line during pump inspection and maintenance. Do not use the isolation valve to throttle the pump. Throttling can cause these problems: • Loss of priming • Excessive temperatures • Damage to the pump • Voiding the warranty	
Make sure that the suction piping is free from air pockets.	This helps to prevent the occurrence of air and cavitation in the pump inlet.	
Check that the piping is level or slopes downward from the liquid source.	—	
Make sure that no part of the suction piping extends below the suction flange of the pump.	—	
Make sure that the suction piping is adequately submerged below the surface of the liquid source.	This prevents air from entering the pump through a suction vortex.	

Example: Elbow close to the pump suction inlet

Correct	Incorrect
The correct distance between the inlet flange of the pump and the closest elbow must be at least five pipe diameters. 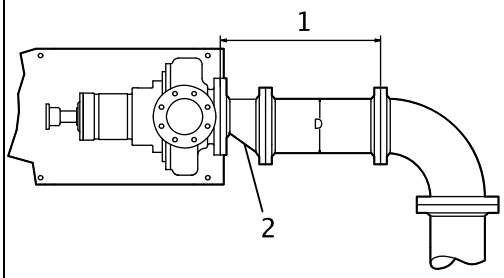 1. Enough distance to prevent cavitation 2. Eccentric reducer with a level top	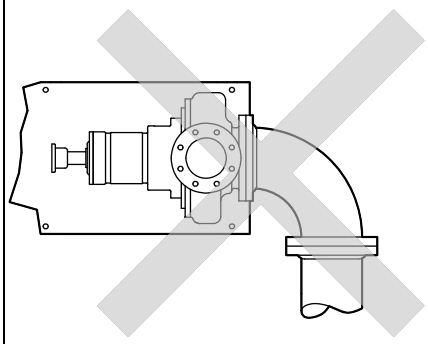

Example: Suction piping equipment

Correct	Incorrect
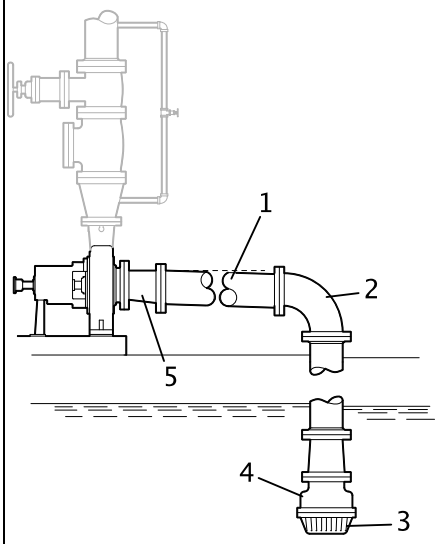 1. Suction pipe sloping upwards from liquid source 2. Long-radius elbow 3. Strainer 4. Foot valve 5. Eccentric reducer with a level top	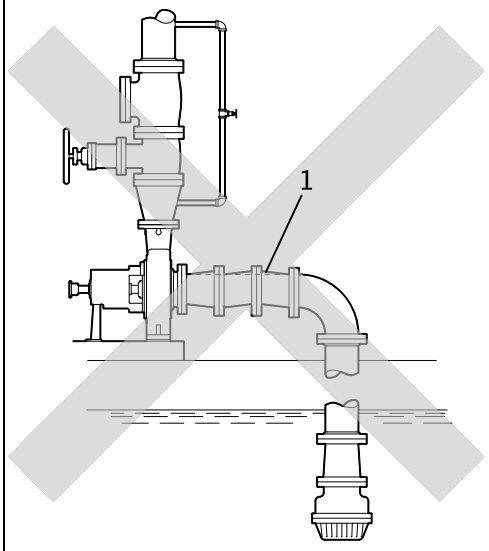 1. Air pocket, because the eccentric reducer is not used and because the suction piping does not slope gradually upward from the liquid source

Discharge piping checklist

Checklist

Check	Explanation/comment	Checked
Check that an isolation valve is installed in the discharge line.	The isolation valve is required for: • Priming • Regulation of flow • Inspection and maintenance of the pump See Example: Discharge piping equipment for illustrations.	
Check that a check valve is installed in the discharge line, between the isolation valve and the pump discharge outlet.	The location between the isolation valve and the pump allows inspection of the check valve. The check valve prevents damage to the pump and seal due to the back flow through the pump, when the drive unit is shut off. It is also used to restrain the liquid flow. See Example: Discharge piping equipment for illustrations.	
If increasers are used, check that they are installed between the pump and the check valve.	See Example: Discharge piping equipment for illustrations.	
If quick-closing valves are installed in the system, check that cushioning devices are used.	This protects the pump from surges and water hammer.	

Example: Discharge piping equipment

Correct	Incorrect
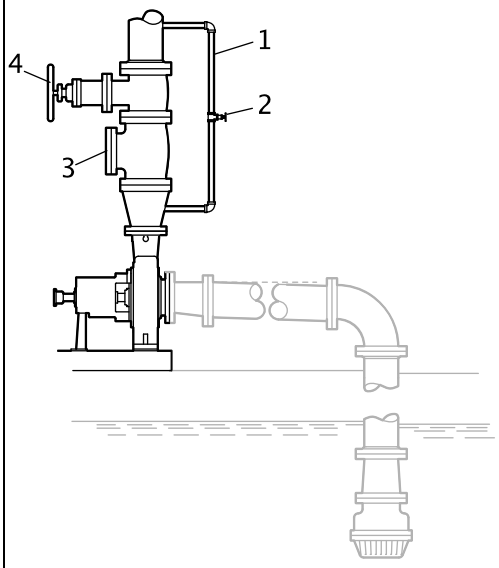 1. Bypass line 2. Shut-off valve 3. Check valve 4. Discharge isolation valve	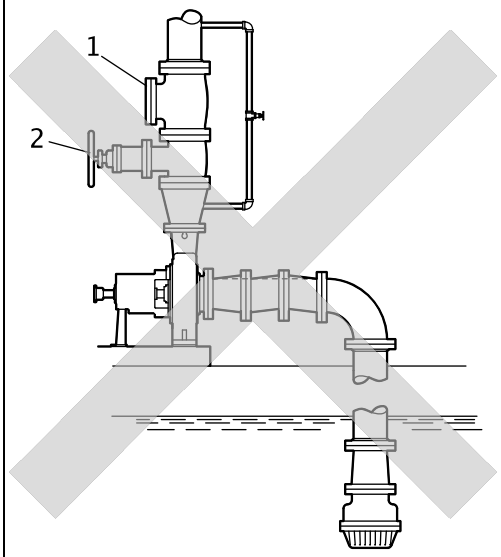 1. Check valve (incorrect position) 2. The isolation valve should not be positioned between the check valve and the pump.

Commissioning, Startup, Operation, and Shutdown

Preparation for startup

DANGER:
Avoid death or serious injury. Explosion and/or seizure of pump can cause fire and/or burns. Never operate pump past the pressure and temperature limits shown on the nameplate on the pump.

WARNING:

- Failure to follow these precautions before you start the unit will lead to serious personal injury and equipment failure.
- Do not operate the pump below the minimum rated flows or with the suction or discharge valves closed. These conditions can create an explosive hazard due to vaporization of pumped fluid and can quickly lead to pump failure and physical injury.
- Avoid death or serious injury. Leaking fluid can cause fire and/or burns. Operating the pump above maximum rated flow shown on the pump curve leading to an increase in horsepower and vibration along with an increase in NPSHr resulting in mechanical seal and/or shaft failure and/or loss of prime.
- Avoid death or serious injury. Leaking fluid can cause fire and/or burns. Speed of pump must reach 2000 rpm for 2 pole motors and 1000 rpm for 4 pole motors within 10 seconds or an increase in vibration and rotor deflection and decrease in rotor stability leading to mechanical seal and/or shaft failure and/or pump seizure can occur.
- Never operate the pump without the coupling guard correctly installed.
- Always disconnect and lock out power to the driver before you perform any installation or maintenance tasks. Failure to disconnect and lock out driver power will result in serious physical injury.
  - Electrical connections must be made by certified electricians in compliance with all international, national, state, and local rules.
  - Refer to driver/coupling/gear manufacturers installation and operation manuals (IOM) for specific instructions and recommendations.
- Operating the pump in reverse rotation can result in the contact of metal parts, heat generation, and breach of containment.
- Avoid death or serious injury. Explosion and/or seizure of pump can cause fire and/or burns. Assure balance line is installed and either piped to the pump suction or back to the suction vessel to avoid vaporization of pumped fluid.

DANGER:
Avoid death or serious injury. Leaking fluid can cause fire and/or burns. Assure all openings are sealed off prior to filling pump.

Precautions

NOTICE:

- Verify the driver settings before you start any pump.
- Make sure that the warm-up rate does not exceed 2.5°F (1.4°C) per minute.
- Risk of damage to the mechanical seal or shaft sleeve on units supplied with cartridge mechanical seals. Prior to startup, make sure to tighten the set screws in the seal locking ring and remove the centering clips.

You must follow these precautions before you start the pump:

- Flush and clean the system thoroughly to remove dirt or debris in the pipe system in order to prevent premature failure at initial startup.

- Bring variable-speed drivers to the rated speed as quickly as possible.
- Run a new or rebuilt pump at a speed that provides enough flow to flush and cool the close-running surfaces of the stuffing-box bushing.
- If temperatures of the pumped fluid will exceed 200°F (93°C), then warm up the pump prior to operation. Circulate a small amount of fluid through the pump until the casing temperature is within 100°F (38°C) of the fluid temperature. Accomplish this by flowing fluid from pump inlet to discharge drain (optionally, the casing vent can be included in warm-up circuit but not required). Soak for (2) hours at process fluid temperature.

At initial startup, do not adjust the variable-speed drivers or check for speed governor or over-speed trip settings while the variable-speed driver is coupled to the pump. If the settings have not been verified, then uncouple the unit and refer to instructions supplied by the driver manufacturer.

Remove the coupling guard

1. Remove the nut, bolt, and washers from the slotted hole in the center of the coupling guard.
2. Slide the driver half of the coupling guard toward the pump.

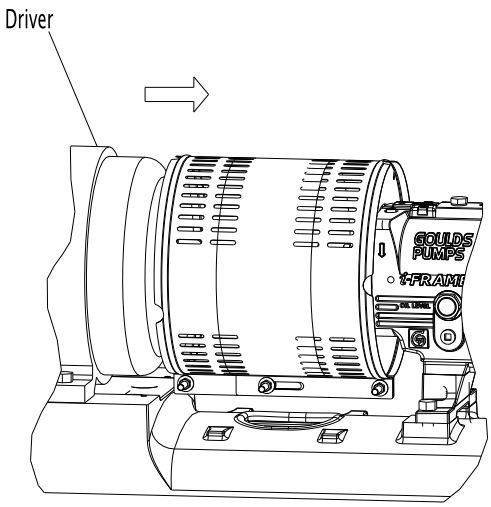

3. Remove the nut, bolt, and washers from the driver half of the coupling guard.

4. Remove the driver-side end plate.

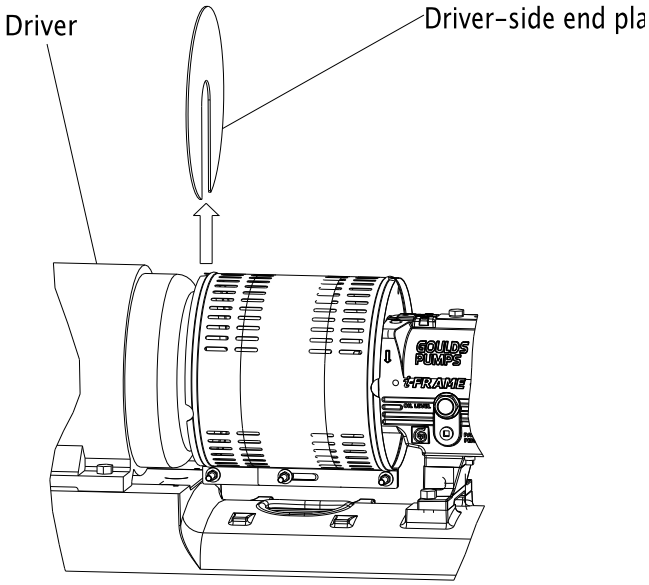

5. Remove the driver half of the coupling guard:
   a) Slightly spread the bottom apart.
   b) Lift upwards.

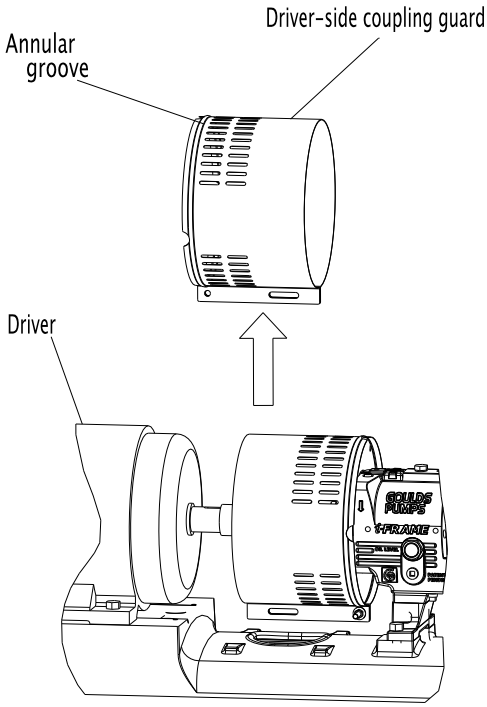

6. Remove the remaining nut, bolt, and washers from the pump half of the coupling guard.
   It is not necessary to remove the end plate from the pump side of the bearing housing. You can access the bearing-housing tap bolts without removing this end plate if maintenance of internal pump parts is necessary.
7. Remove the pump half of the coupling guard:
   a) Slightly spread the bottom apart.

b) Lift upwards.

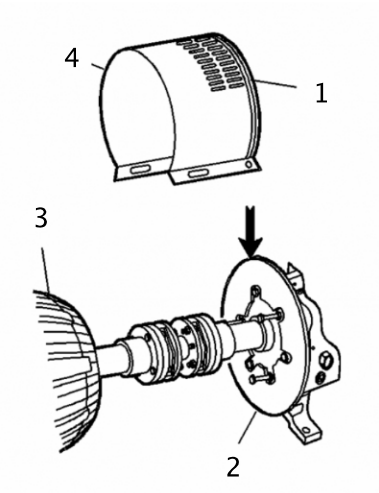

1. Annular groove
2. Pump-side end plate
3. Driver
4. Pump half of the coupling guard

Check the rotation - Frame Mounted

WARNING:

- Operating the pump in reverse rotation can result in the contact of metal parts, heat generation, and breach of containment.
- Always disconnect and lock out power to the driver before you perform any installation or maintenance tasks. Failure to disconnect and lock out driver power will result in serious physical injury.
  - Electrical connections must be made by certified electricians in compliance with all international, national, state, and local rules.
  - Refer to driver/coupling/gear manufacturers installation and operation manuals (IOM) for specific instructions and recommendations.

1. Lock out power to the driver.
2. Make sure that the coupling hubs are fastened securely to the shafts.
3. Make sure that the coupling spacer is removed.
   The pump ships with the coupling spacer removed.
4. Unlock power to the driver.
5. Make sure that everyone is clear, and then jog the driver long enough to determine that the direction of rotation corresponds to the arrow on the bearing housing or close-coupled frame.
6. Lock out power to the driver.

Impeller-clearance check

The impeller-clearance check ensures the following:

- The pump turns freely.
- The pump operates at optimal efficiency for long equipment life and low energy consumption.

Impeller clearances (3196 and HT 3196)

WARNING:
For pumpage temperatures greater than 200°F (93°C), you must increase the cold (ambient) setting according to this table. Doing so prevents the impeller from contacting the casing due to differential expansion from the higher operating temperatures. Failure to do so may result in sparks, unexpected heat generation, and equipment damage.

NOTICE:
Do not set the maximum impeller setting to more than 0.005 in. (0.13 mm) greater than the values in this table. Doing so may result in a significant decrease in performance.

Table 8: Impeller clearances
This pump requires the impeller clearances in the following table.

Service temperature in. (mm)	STi in. (mm)	MTi/LTi in. (mm)	XLT-i/i17
-20 to 200°F (-29 to 93°C)	0.005 (0.13)	0.008 (0.20)	0.015 (0.38)
Up to 250°F (121°C)	0.006 (0.15)	0.009 (0.22)	0.016 (0.41)
Up to 300°F (149°C)	0.007 (0.18)	0.010 (0.25)	0.017 (0.43)
Up to 350°F (177°C)	0.009 (0.22)	0.012 (0.30)	0.019 (0.48)
Up to 400°F (204°C)	0.010 (0.25)	0.013 (0.33)	0.020 (0.50)
Up to 450°F (232°C)	0.011 (0.28)	0.014 (0.35)	0.021 (0.53)
Up to 500°F (260°C)	0.012 (0.30)	0.015 (0.38)	0.022 (0.56)
Up to 550°F (288°C)	0.013 (0.33)	0.016 (0.41)	0.023 (0.58)
Up to 600°F (316°C)	0.014 (0.36)	0.017 (0.43)	0.024 (0.61)
Up to 650°F (343°C)	0.016 (0.40)	0.019 (0.48)	0.026 (0.66)
Up to 700°F (371°C)	0.017 (0.43)	0.020 (0.50)	0.027 (0.69)

Impeller-clearance setting

Importance of a proper impeller clearance

A proper impeller clearance ensures that the pump runs at high performance.

WARNING:
- The impeller clearance setting procedure must be followed. Improperly setting the clearance or not following any of the proper procedures can result in sparks, unexpected heat generation, and equipment damage.
- If you use a cartridge mechanical seal, you must install the centering clips and loosen the set screws before you set the impeller clearance. Failure to do so could result in sparks, heat generation, and mechanical seal damage.

Impeller clearance methods

You can set the impeller clearance with either of these methods:

- Dial indicator method
- Feeler gauge method

Set the impeller clearance - dial indicator method (all except CV 3196)

WARNING:
Always disconnect and lock out power to the driver before you perform any installation or maintenance tasks. Failure to disconnect and lock out driver power will result in serious physical injury.
- Electrical connections must be made by certified electricians in compliance with all international, national, state, and local rules.
- Refer to driver/coupling/gear manufacturers installation and operation manuals (IOM) for specific instructions and recommendations.

1. Remove the coupling guard.
2. Set the indicator so that the button contacts either the shaft end or the face of the coupling.

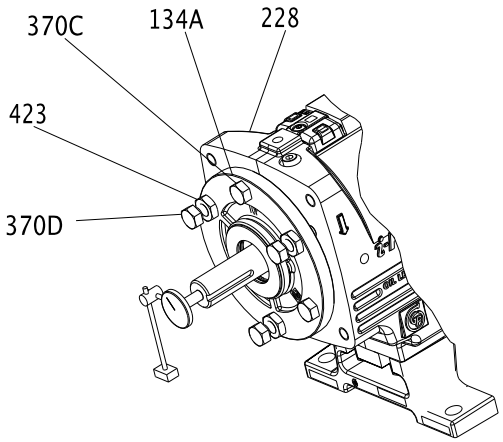

3. Loosen the jam nuts (423) on the jack bolts (370D) , and then back the bolts out about two turns.
4. Tighten the locking bolts evenly (370C), bringing the bearing housing (134A) towards the frame (228) until the impeller contacts the casing.
5. Turn the shaft to ensure that there is contact between the impeller and the casing.
6. Set the indicator to zero and loosen the locking bolt (370C) about one turn.
7. Thread in the jack bolts (370D) until the jack bolts evenly contact the bearing frame.
8. Tighten the jack bolts evenly about one flat at a time, moving the bearing housing (134A) away from the bearing frame until the indicator shows the correct clearance.
   Refer to the impeller clearance table to determine the correct clearance.
9. Tighten the bolts evenly in this order:
   a) Tighten the locking bolts (370C).
   b) Tighten the jack bolts (370D).
   Make sure to keep the indicator reading at the proper setting.
10. Make sure the shaft turns freely.

Set the impeller clearance - feeler gauge method (all except CV 3196)

WARNING:
Always disconnect and lock out power to the driver before you perform any installation or maintenance tasks. Failure to disconnect and lock out driver power will result in serious physical injury.

- Electrical connections must be made by certified electricians in compliance with all international, national, state, and local rules.
- Refer to driver/coupling/gear manufacturers installation and operation manuals (IOM) for specific instructions and recommendations.

1. Lock out the driver power and remove the coupling guard.

2. Loosen the jam nuts (423B) on the jack bolts (371A), and then back the bolts out about two turns.

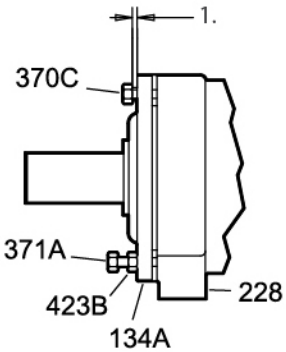

1. See impeller clearance table for distance

3. Evenly tighten the locking bolts (370C), bringing the bearing housing (134A) towards the frame (228) until the impeller contacts the casing.
4. Turn the shaft to ensure that there is contact between the impeller and the casing.
5. Use a feeler gauge to set the gap between the three locking bolts (370C) and the bearing housing (134A) to the correct impeller clearance.
   Refer to the impeller clearance table to determine the correct clearance.
6. Use the three jack bolts (370D) to evenly loosen the bearing housing (134A) until it contacts the locking bolts (370C).
7. Evenly tighten the jam nuts (423B).
8. Make sure the shaft turns freely.

Couple the pump and driver

WARNING:
Always disconnect and lock out power to the driver before you perform any installation or maintenance tasks. Failure to disconnect and lock out driver power will result in serious physical injury.

- Electrical connections must be made by certified electricians in compliance with all international, national, state, and local rules.
- Refer to driver/coupling/gear manufacturers installation and operation manuals (IOM) for specific instructions and recommendations.

Couplings must have proper certification to be used in an ATEX classified environment. Use the instructions from the coupling manufacturer in order to lubricate and install the coupling. Refer to driver/coupling/gear manufacturers IOM for specific instructions and recommendations.

Install the coupling guard

WARNING:

- Never operate a pump without a properly installed coupling guard. Personal injury will occur if you run the pump without a coupling guard.
- Electrical Connections must be made by certified electricians in compliance with all international, national, state, and local rules.
- Refer to driver/coupling/gear manufacturers IOM for specific instructions and recommendations.
- Always disconnect and lock out power to the driver before you perform any installation or maintenance tasks. Failure to disconnect and lock out driver power will result in serious physical injury.
  - Electrical connections must be made by certified electricians in compliance with all international, national, state, and local rules.
  - Refer to driver/coupling/gear manufacturers installation and operation manuals (IOM) for specific instructions and recommendations.
- The coupling used in an Ex-classified environment must be properly certified and must be constructed from a non-sparking material.

Required parts:

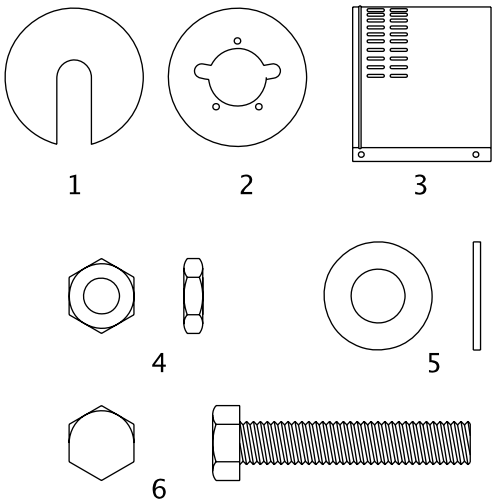

1. End plate, drive end
2. End plate, pump end
3. Guard half, 2 required
4. 3/8-16 nut, 3 required
5. 3/8 in. washer
6. 3/8-16 x 2 in. hex head bolt, 3 required

1. De-energize the motor, place the motor in a locked-out position, and place a caution tag at the starter that indicates the disconnect.
2. Put the pump-side end plate in place.
   If the pump-side end plate is already in place, make any necessary coupling adjustments and then proceed to the next step.

If the pump size is...	Then...
STi, MTi, LTi	Align the pump-side end plate to the bearing frame. You do not need to adjust the impeller.

XLT-i	1. Align the end plate on the pump side to the bearing housing so that you meet these conditions:
	  1. The large slots on the end plate do not touch the bearing housing tap bolts.
	  2. The small slots align with the impeller adjusting bolts.
	2. Fasten the end plate to the bearing housing using the jam nuts on the impeller adjusting bolts.
	3. Check the impeller clearance. Refer to the impeller clearance table for the correct impeller clearance.

If the pump size is...	Then...

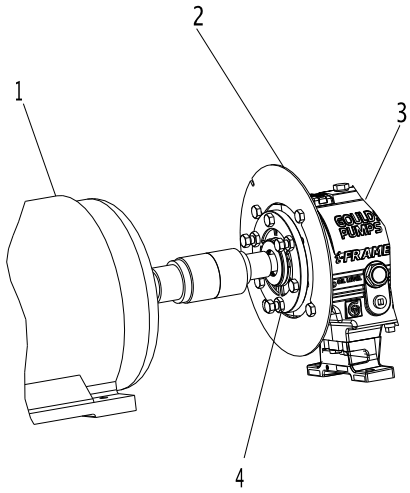

1. Driver
2. Pump end plate
3. Bearing housing
4. Jam nut

3. Put the pump-half of the coupling guard in place:
   a) Slightly spread the bottom apart.
   b) Place the coupling guard half over the pump-side end plate.

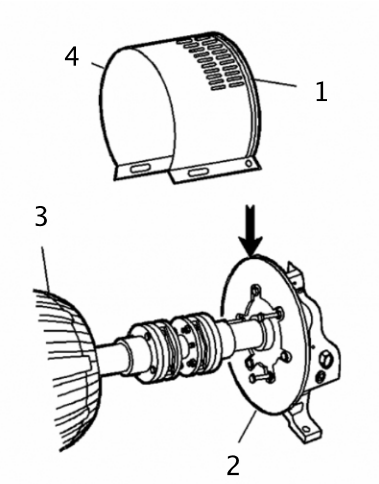

1. Annular groove
2. Pump-side end plate
3. Driver
4. Pump half of the coupling guard

The annular groove in the coupling guard half must fit around the end plate.

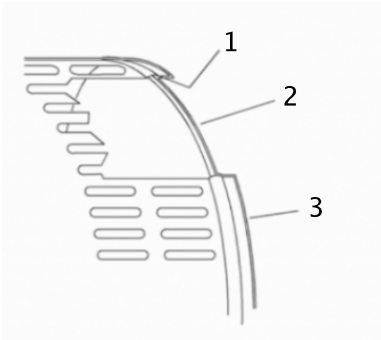

1. Annular groove
2. End plate (pump end)
3. Guard half

4. Use a bolt, a nut, and two washers to secure the coupling guard half to the end plate. Tighten securely.

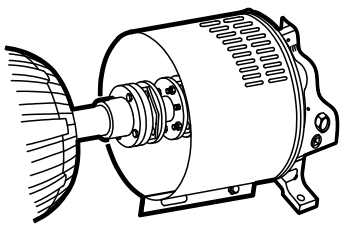

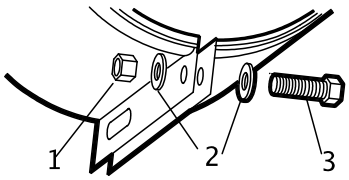

1. Nut
2. Washer
3. Bolt

5. Put the driver half of the coupling guard in place:
   a) Slightly spread the bottom apart.

b) Place the driver half of the coupling guard over the pump half of the coupling guard. The annular groove in the coupling guard half must face the motor.

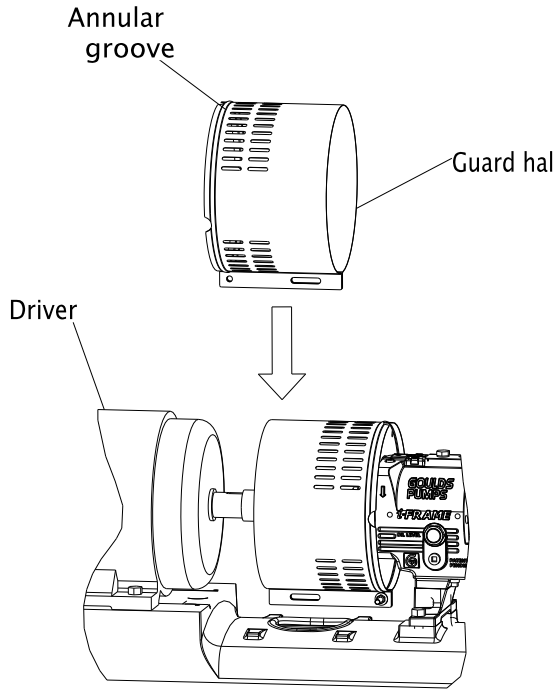

6. Place the driver-side end plate over the motor shaft.

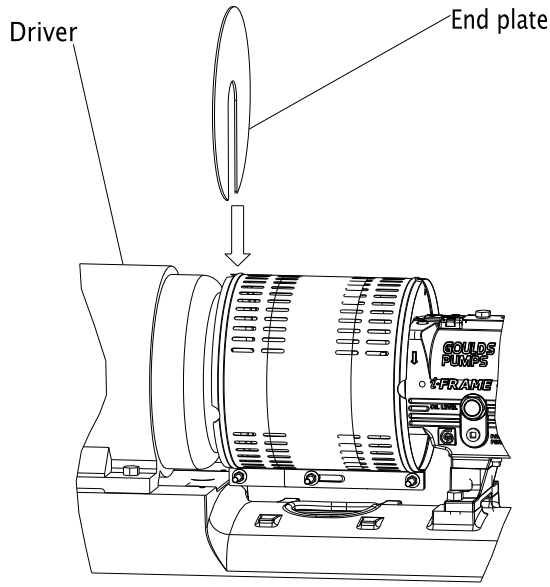

7. Place the driver-side end plate in the annular groove of the driver-half of the coupling guard.
8. Use a bolt, a nut, and two washers to secure the coupling guard half to the end plate. Hand-tighten only.
   The hole is located on the driver-side of the coupling guard half.

9. Slide the driver-half of the coupling guard towards the motor so that the coupling guard completely covers the shafts and coupling.

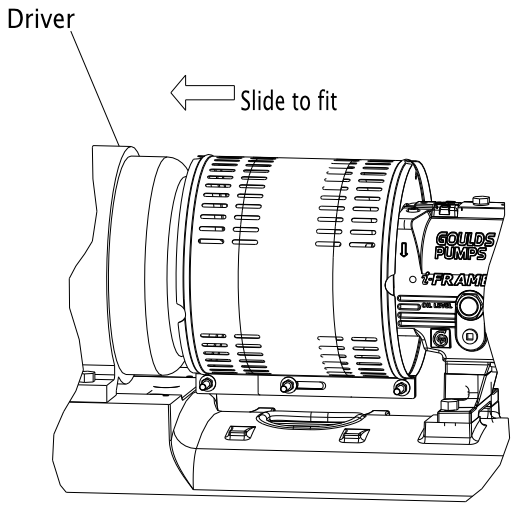

10. Use a nut, a bolt, and two washers to secure the coupling guard halves together.
11. Tighten all nuts on the guard assembly.

WARNING:
Never operate the pump without the coupling guard correctly installed.

Bearing lubrication

WARNING:
Make sure to properly lubricate the bearings. Failure to do so can result in excess heat generation, sparks, and premature failure.

NOTICE: Be certain to check the greasing on a pump that has been out of service for a long period of time and re-grease if necessary.

Pumps are shipped without oil. You must lubricate oil-lubricated bearings at the job site.

Grease-lubricated bearings are lubricated at the factory.

The bearing manufacturer fills greased-for-life bearings with grease and seals them at the factory. You do not need to lubricate or seal these bearings.

Oil volumes

Oil volume requirements

This table shows the required amount of oil for oil-lubricated bearings.

Frame	Qts.	Oz.	ml
STi	0.5	16	400
MTi	1.5	47	1400
LTi	1.5	48	1400
XLT-i and i17	3	96	3000

Lubricating-oil requirements

Oil requirements based on temperature

For the majority of operating conditions, bearing temperatures run between 120°F (49°C) and 180°F (82°C), and you can use an oil of ISO viscosity grade 68 at 100°F (38°C). If temperatures exceed 180°F (82°C), refer to the table for temperature requirements.

Temperature	Oil requirement
Bearing temperatures exceed 180°F (82°C)	Use ISO viscosity grade 100 with bearing-frame cooling or finned-tube oil cooler. The finned-tube oil cooler is standard with the HT 3196 model and optional for all other models.
Pumped-fluid temperatures exceed 350°F (177°C)	Use synthetic lubrication.

Acceptable oil for lubricating bearings

Acceptable lubricants

Examples of acceptable high quality turbine oils with rust and oxidation inhibitors.

Brand	Lubricant type
Chevron	GTS Oil 68
Exxon	Teresstic EP 68
Mobil	DTE 26 300 SSU @ 100°F (38°C)
Philips	Mangus Oil 315
Shell	Tellus Oil 68
Sunoco	Sunvis 968
Royal Purple	SYNFILM ISO VG 68 Synthetic Lube

Examples of acceptable synthetic lubricants.

Brand	Lubricant type
Castrol	Hyspin R&O 220
Chevron	GST 220
Exxon	Teresstic 220
Mobil	DTE Oil BB SHC 630
Shell	Marlina 220 Tellus 220
Sunoco	Sunvis 9220
Texaco	Regal R&O 220 Rando HD 220
Royal Purple	Synfilm GT 220 Synergy 220

Lubricate the bearings with oil

Use a high-quality turbine oil with rust and oxidation inhibitors.

1. Remove the fill plug.
2. Fill the bearing frame with oil through the filler connection, which is located on top of the bearing frame.

Fill the bearing frame with oil until the oil level reaches the middle of the sight glass (319).

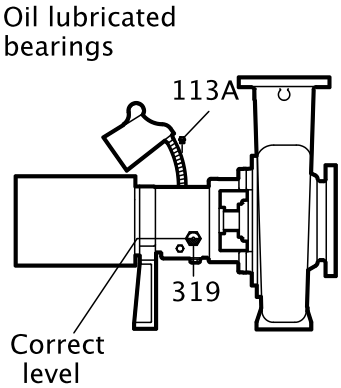

3. Replace the fill plug.

Lubricate the bearings with pure oil mist

Oil mist is an optional feature for this pump.
To lubricate bearings with pure oil mist, follow the instructions provided by the manufacturer of the oil-mist generator.
The inlet connections are on the top of the bearing frame.

Greased-for-life bearing lubrication

The bearing manufacturer fills greased-for-life bearings with grease and seals them at the factory. You do not need to lubricate or seal these bearings. Refer to the Maintenance chapter for re-greasing and maintenance procedures for these bearings.

Shaft-sealing options

In most cases, the manufacturer seals the shaft before shipping the pump. If your pump does not have a sealed shaft, see the Shaft-seal maintenance section in the Maintenance chapter.
This model uses these types of shaft seals:

- Cartridge mechanical seal
- Conventional inside-component mechanical seal
- Conventional outside-component mechanical seal
- Dynamic seal
- Packed-stuffing-box option

Mechanical seal options

Pumps are usually shipped with mechanical seals installed. If they are not, then refer to the mechanical seal manufacturer's installation instructions.
These are the mechanical seal options for this pump:

- Cartridge mechanical seal
- Conventional inside component mechanical seal
- Conventional outside component mechanical seal

Connection of sealing liquid for mechanical seals

Seal lubrication is required

Seal faces must have liquid film between them for proper lubrication. Locate the taps using the illustrations shipped with the seal.

Seal flushing methods

You can use these methods in order to flush or cool the seal:

Method	Description
Product flush	Run the piping so that the pump pushes the pumped fluid from the casing and injects it into the seal gland. If necessary, an external heat exchanger cools the pumped fluid before it enters the seal gland.
External flush	Run the piping so that the pump injects a clean, cool, compatible liquid directly into the seal gland. The pressure of the flushing liquid must be 5 to 15 psi (0.35 to 1.01 kg/cm^2) greater than the seal chamber pressure. The injection rate must be 0.5 to 2 gpm (2 to 8 lpm).
Other	You can use other methods that employ multiple gland or seal chamber connections. Refer to the mechanical seal reference drawing and piping diagrams.

Packed stuffing box option

WARNING:
Packed stuffing boxes are not allowed in an ATEX-classified environment.

The factory does not install the packing, lantern ring, or split gland.

These parts are included with the pump in the box of fittings. Before you start the pump, you must install the packing, lantern ring, and split gland according to the Packed stuffing box maintenance section in the Maintenance chapter.

Connection of sealing liquid for a packed stuffing box

WARNING:
Packed stuffing boxes are not allowed in an ATEX-classified environment.

NOTICE:
Make sure to lubricate the packing. Failure to do so may result in shortening the life of the packing and the pump.

You must use an external sealing liquid under these conditions:

- The pumped fluid includes abrasive particles.
- The stuffing-box pressure is below atmospheric pressure when the pump is running with a suction lift or when the suction source is in a vacuum. Under these conditions, packing is not cooled and lubricated and air is drawn into pump.

Conditions for application of an external liquid

Condition	Action
The stuffing box pressure is above atmospheric pressure and the pumped fluid is clean.	Normal gland leaks of 40 to 60 drops per minute is usually sufficient to lubricate and cool the packing. You do not need sealing liquid.
The stuffing box pressure is below atmospheric pressure or the pumped fluid is not clean.	An outside source of clean compatible liquid is required.
An outside source of clean compatible liquid is required.	You must connect the piping to the lantern ring connection with a 40 to 60 drops-per-minute leak rate. The pressure must be 15 psi (1.01 kg/cm^2) above the stuffing box pressure.

Dynamic-seal option

WARNING:
Dynamic seals are not allowed in an ATEX-classified environment.

The dynamic seal consists of two parts:

- Repeller seal
- Secondary seal (one of the following):
  - Graphite packing
  - Elastomenic face seal

Table 9: Dynamic seal part function

Part	Function
Repeller seal	A repeller seal prevents liquid from entering the stuffing box during operation. The repeller normally does not require a flush. However, for services that allow a build-up of solids on the repeller, you must install a flush connection. If a danger of freezing exists, then you must install a drain connection to drain the repeller chamber.

Secondary seal (graphite packing)	This secondary seal prevents leaks during pump shutdown and is comprised of the following:
	• Graphite packing – Graphite packing provides adequate life running dry but can provide longer performance if lubricated with clean water or grease.
	  • If you lubricate with clean water, then the repeller reduces both the quantity and pressure of seal water that is necessary. If the suction head is less than the repeller capability, then the stuffing box pressure is the same as the atmospheric pressure. Water pressure for the seal must be high enough to overcome static head when the pump is not operating to keep pumped fluid out of the packing. There must be enough flow to cool the packing.
	  • If you lubricate with grease, then you must use spring-loaded grease lubricators to maintain a constant supply.
	• Elastomeric face seal – The elastomeric face seal consists of an elastomer rotary fitted to the shaft and a ceramic stationary seat fitted in the gland. To set an elastomeric face seal, refer to Set an elastomeric face seal. This seal is designed to run dry, so no flush is necessary.

Set an elastomeric face seal

This procedure ensures that the elastomeric seal attains proper contact. No other adjustments are necessary.

1. Remove the gland nuts.
2. Slide the gland back on the sleeve.
3. Pull the rotary back on the sleeve until the rotary is about 1 in. (25 mm) beyond the stuffing box face.
4. Push the gland back onto the studs, pushing the rotary back along the sleeve.
5. Tighten the gland nuts.

Pump priming

Prime the pump with the suction supply above the pump

1. Slowly open the suction isolation valve.
2. Open the air vents on the suction and discharge piping until the pumped fluid flows out.
3. Close the air vents.

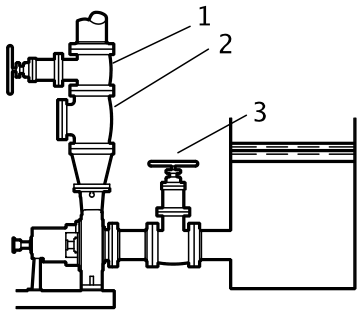

1. Discharge isolation valve
2. Check valve
3. Suction isolation valve

Prime the pump with the suction supply below the pump

Use a foot valve and an outside source of liquid in order to prime the pump. The liquid can come from one of these sources:

- A priming pump
- A pressurized discharge line
- Another outside supply

1. Close the discharge isolation valve.
2. Open the air vent valves in the casing.
3. Open the valve in the outside supply line until only liquid escapes from the vent valves.
4. Close the vent valves.
5. Close the outside supply line.

This illustration is an example of priming the pump with a foot valve and an outside supply:

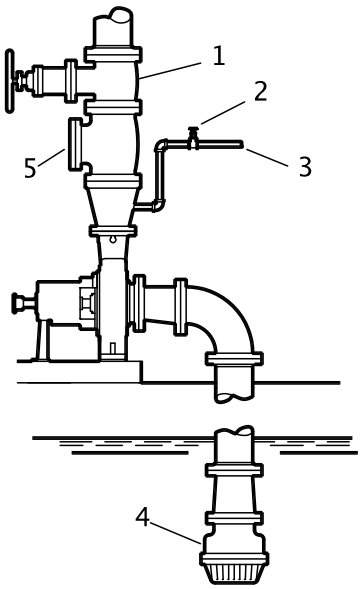

1. Discharge isolation valve
2. Shutoff valve
3. From outside supply
4. Foot valve
5. Check valve

This illustration is an example of priming the pump with a foot valve using a bypass around the check valve:

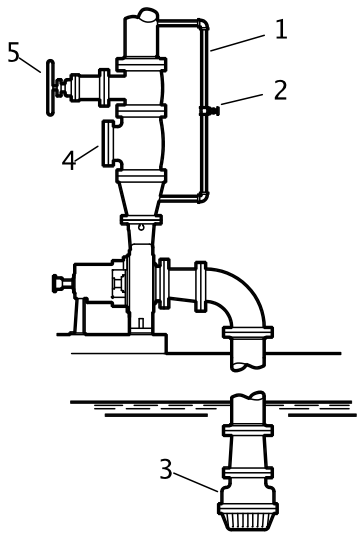

1. By-pass line
2. Shutoff valve
3. Foot valve
4. Check valve
5. Discharge isolation valve

Other methods of priming the pump

You can also use these methods in order to prime the pump:

- Prime by ejector
- Prime by automatic priming pump

Start the pump

WARNING: Immediately observe the pressure gauges. If discharge pressure is not quickly attained, stop the driver immediately, reprime, and attempt to restart the pump.

CAUTION:

- Immediately observe the pressure gauges. If discharge pressure is not quickly attained, stop the driver, reprime, and attempt to restart the pump.
- Observe the pump for vibration levels, bearing temperature, and excessive noise. If normal levels are exceeded, shut down the pump and resolve the issue.
- On pure or purge-oil mist-lubricated units, remove the viewing port plugs to verify that oil mist flowing properly. Replace the plugs.
- On frame mounted units, ensure that the oil level is correct prior to starting pump. Close coupled pumps do not have oil lubricated bearings.
- Ensure all flush and cooling systems are operating correctly prior to starting pump.

Before you start the pump, you must perform these tasks:

- Open the suction valve.
- Open any recirculation or cooling lines.

1. Fully close or partially open the discharge valve, depending on system conditions.
2. Start the driver.
3. Slowly open the discharge valve until the pump reaches the desired flow.
4. Immediately check the pressure gauge to ensure that the pump quickly reaches the correct discharge pressure.
5. If the pump fails to reach the correct pressure, perform these steps:
   a) Stop the driver.
   b) Prime the pump again.
   c) Restart the driver.
6. Monitor the pump while it is operating:
   a) Check the pump for bearing temperature, excessive vibration, and noise.
   b) If the pump exceeds normal levels, then shut down the pump immediately and correct the problem.
   A pump can exceed normal levels for several reasons. See Troubleshooting for information about possible solutions to this problem.
7. Repeat steps 5 and 6 until the pump runs properly.

Activate the i-ALERT Condition Monitor

WARNING:
Never heat the condition monitor to temperatures in excess of 300°F (149°C). Heating to these temperatures could result in death or serious injury.

CAUTION:
Always wear protective gloves. The pump and condition monitor can be hot.

By using the i-Alert™ Condition monitor, you agree to be bound by the Terms and Conditions of the *Software License Agreement* (page 18)

The condition monitor is ready for activation when the pump is running and has reached a steady flow, pressure, and temperature. This process only takes a few minutes.

1. Place a small magnet on the condition monitor over the ITT logo and then remove it, as this example shows.

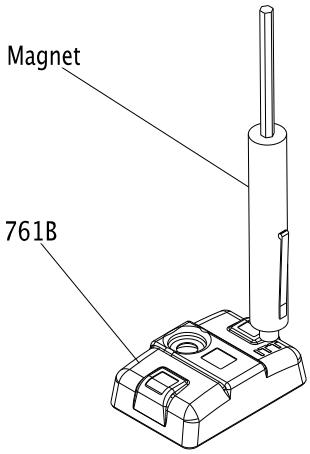

When the condition monitor is activated it:

1. Displays a series of red LEDs followed by a solid green LED.
2. Collects eight samples that are spaced one second apart.
3. Averages these readings to establish the baseline vibration level.
4. Flashes a green LED after approximately twelve seconds.

For the first ten minutes, the green LED flashes every second for five consecutive flashes and then pauses to take a vibration reading. More frequent measurements (every six seconds) are taken in this startup period so that an alarm can be immediately detected.

i-ALERT™ Condition Monitor routine operation

Measurement interval

This table shows the measurement intervals for the condition monitor during normal operation and when the monitor is in alarm mode.

Mode	Measurement interval
Normal operating mode	Five minutes
Alarm mode	Two minutes

When the condition monitor measures a reading beyond the specified temperature and vibration limits, the appropriate red LED flashes. After the process or pump condition that causes the alarm is corrected, the condition monitor returns to normal mode after one normal-level measurement.

Alarm mode

When the condition monitor is in alarm mode, you should investigate the cause of the condition and make necessary corrections in a timely manner.

Magnetic device considerations

Be careful when you use magnetic devices in close proximity of the condition monitor, such as magnetic vibration-monitoring probes or dial indicators. These magnetic devices can accidentally activate or deactivate the condition monitor resulting in improper alarm levels or loss of monitoring.

Pump operation precautions

General considerations

CAUTION:

- Vary the capacity with the regulating valve in the discharge line. Never throttle the flow from the suction side since this can result in decreased performance, unexpected heat generation, and equipment damage.
  Do not overload the driver. Driver overload can result in unexpected heat generation and equipment damage. The driver can overload in these circumstances:
  - The specific gravity of the pumped fluid is greater than expected.
  - The pumped fluid exceeds the rated flow rate.
- Do not operate pump past the maximum flow. For maximum flow refer to the pump performance curve.
- Do not overload the driver. Driver overload can result in unexpected heat generation and equipment damage. The driver can overload in these circumstances:
  - The specific gravity of the pumped fluid is greater than expected.
  - The pumped fluid exceeds the rated flow rate.
- Do not operate pump below hydraulic or thermal minimum flow. For hydraulic minimum flows refer to technical manual and pump performance curve. To calculate thermal minimum flow, refer to HI Centrifugal Pumps for Design and Application ANSI/HI 1.3-2000.
- Make sure to operate the pump at or near the rated conditions. Failure to do so can result in pump damage from cavitation or recirculation.

Operation at reduced capacity

WARNING:
Never operate any pumping system with a blocked suction and discharge. Operation, even for a brief period under these conditions, can cause confined pumped fluid to overheat, which results in a violent explosion. You must take all necessary measures to avoid this condition. If pump becomes plugged shut down and unplug prior to restarting pump.

CAUTION:

- The pump and system must be free of foreign objects. If pump becomes plugged, shut down and unplug prior to restarting pump.
- Avoid excessive vibration levels. Excessive vibration levels can damage the bearings, stuffing box or seal chamber, and the mechanical seal, which can result in decreased performance.
- Avoid increased radial load. Failure to do so can cause stress on the shaft and bearings.
- Avoid heat build-up. Failure to do so can cause rotating parts to score or seize.
- Avoid cavitation. Failure to do so can cause damage to the internal surfaces of the pump.

Operation under freezing conditions

NOTICE:
Do not expose an idle pump to freezing conditions. Drain all liquid that is inside the pump and the cooling coils. Failure to do so can cause liquid to freeze and damage the pump.

Shut down the pump

WARNING:
The pump can handle hazardous and toxic fluids. Identify the contents of the pump and observe proper decontamination procedures in order to eliminate the possible exposure to any hazardous or toxic fluids. Wear the proper personal protective equipment. Potential hazards include, but are not limited to, high temperature, flammable, acidic, caustic, explosive, and other risks. You must handle and dispose of pumped fluid in compliance with the applicable environmental regulations.

1. Slowly close the discharge valve.
2. Shut down and lock the driver to prevent accidental rotation.

Deactivate the i-ALERT™ Condition Monitor

NOTICE:
Always deactivate the condition monitor when the pump is going to be shut down for an extended period of time. Failure to do so will result in reduced battery life.

1. Touch and hold a small magnet to the condition monitor over the ITT logo until the red LEDs blink three times.
   This should take 10-15 seconds if the condition monitor is in normal operating mode and approximately five seconds if the condition monitor is in alarm mode.
2. Remove the magnet.

If the deactivation is successful, solid red LEDs will be displayed.

Reset the i-ALERT™ Condition Monitor

NOTICE:
Always reset the condition monitor when the pump is started after maintenance, system change, or down-time. Failure to do so may result in false baseline levels that could cause the condition monitor to alert in error.

1. Touch a magnet to the condition monitor over the ITT logo to turn the power on.The condition monitor begins to establish a new baseline vibration level.

Make the final alignment of the pump and driver

WARNING:
- Always disconnect and lock out power to the driver before you perform any installation or maintenance tasks. Failure to disconnect and lock out driver power will result in serious physical injury.
  - Electrical connections must be made by certified electricians in compliance with all international, national, state, and local rules.
  - Refer to driver/coupling/gear manufacturers installation and operation manuals (IOM) for specific instructions and recommendations.
- Follow shaft alignment procedures in order to prevent catastrophic failure of drive components or unintended contact of rotating parts. Follow the coupling installation and operation procedures from the coupling manufacturer.

You must check the final alignment after the pump and driver are at operating temperature. For initial alignment instructions, see the Installation chapter.

1. Run the unit under actual operating conditions for enough time to bring the pump, driver, and associated system to operating temperature.
2. Shut down the pump and the driver.
3. Remove the coupling guard.
   See Remove the coupling guard in the Maintenance chapter.
4. Check the alignment while the unit is still hot.
   See Pump-to-driver alignment in the Installation chapter.
5. Reinstall the coupling guard.
6. Restart the pump and driver.

Maintenance

Maintenance schedule

Maintenance inspections

A maintenance schedule includes these types of inspections:

- Routine maintenance
- Routine inspections
- Three-month inspections
- Annual inspections

Shorten the inspection intervals appropriately if the pumped fluid is abrasive or corrosive or if the environment is classified as potentially explosive.

Routine maintenance

Perform these tasks whenever you perform routine maintenance:

- Lubricate the bearings.
- Inspect the seal.

Routine inspections

Perform these tasks whenever you check the pump during routine inspections:

- Check the level and condition of the oil through the sight glass on the bearing frame.
- Check for unusual noise, vibration, and bearing temperatures.
- Check the pump and piping for leaks.
- Analyze the vibration.
- Inspect the discharge pressure.
- Inspect the temperature.
- Check the seal chamber and stuffing box for leaks.
  - Ensure that there are no leaks from the mechanical seal.
  - Adjust or replace the packing in the stuffing box if you notice excessive leaking.

Three-month inspections

Perform these tasks every three months:

- Check that the foundation and the hold-down bolts are tight.
- Check the packing if the pump has been left idle, and replace as required.
- Change the oil every three months (2000 operating hours) at minimum.
  - Change the oil more often if there are adverse atmospheric or other conditions that might contaminate or break down the oil.
- Check the shaft alignment, and realign as required.

Annual inspections

Perform these inspections one time each year:

- Check the pump capacity.
- Check the pump pressure.
- Check the pump power.

If the pump performance does not satisfy your process requirements, and the process requirements have not changed, then perform these steps:

1. Disassemble the pump.
2. Inspect it.

3. Replace worn parts.

Bearing maintenance

These bearing lubrication sections list different temperatures of the pumped fluid. If the pump is ATEX-certified and the temperature of the pumped fluid exceeds the permitted temperature values, then consult your ITT representative.

Bearing lubrication schedule

Type of bearing	First lubrication	Lubrication intervals
Oil-lubricated bearings	Add oil before you install and start the pump. Change the oil after 200 hours for new bearings.	After the first 200 hours, change the oil every 2000 operating hours or every three months.
Grease-lubricated bearings	Grease-lubricated bearings are initially lubricated at the factory.	Regrease bearings every 2000 operating hours or every three months.

Lubricating-oil requirements

Oil requirements based on temperature

For the majority of operating conditions, bearing temperatures run between 120°F (49°C) and 180°F (82°C), and you can use an oil of ISO viscosity grade 68 at 100°F (38°C). If temperatures exceed 180°F (82°C), refer to the table for temperature requirements.

Temperature	Oil requirement
Bearing temperatures exceed 180°F (82°C)	Use ISO viscosity grade 100 with bearing-frame cooling or finned-tube oil cooler. The finned-tube oil cooler is standard with the HT 3196 model and optional for all other models.
Pumped-fluid temperatures exceed 350°F (177°C)	Use synthetic lubrication.

Oil volumes

Oil volume requirements

This table shows the required amount of oil for oil-lubricated bearings.

Frame	Qts.	Oz.	ml
STi	0.5	16	400
MTi	1.5	47	1400
LTi	1.5	48	1400
XLT-i and i17	3	96	3000

Acceptable oil for lubricating bearings

Acceptable lubricants

Examples of acceptable high quality turbine oils with rust and oxidation inhibitors.

Brand	Lubricant type
Chevron	GTS Oil 68
Exxon	Teresstic EP 68
Mobil	DTE 26 300 SSU @ 100°F (38°C)
Philips	Mangus Oil 315
Shell	Tellus Oil 68
Sunoco	Sunvis 968
Royal Purple	SYNFILM ISO VG 68 Synthetic Lube

Examples of acceptable synthetic lubricants.

Brand	Lubricant type
Castrol	Hyspin R&O 220
Chevron	GST 220
Exxon	Teresstic 220

Brand	Lubricant type
Mobil	DTE Oil BB SHC 630
Shell	Marlina 220 Tellus 220
Sunoco	Sunvis 9220
Texaco	Regal R&O 220 Rando HD 220
Royal Purple	Synfilm GT 220 Synergy 220

Regrease the grease-lubricated bearings

NOTICE:
Make sure that the grease container, the greasing device, and the fittings are clean. Failure to do this can result in impurities entering the bearing housing when you regrease the bearings.

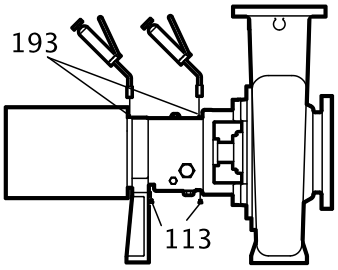

1. Wipe dirt from the grease fittings.
2. Remove the two grease-relief plugs from the bottom of the frame.
3. Fill both of the grease cavities through the fittings with a recommended grease until the fresh grease comes out of the relief holes.
4. Make sure that the frame seals are seated in the bearing housing.
   If they are not, press them in place with the drains located at the bottom.
5. Reinstall the grease-relief plugs.
6. Wipe off any excess grease.
7. Recheck the alignment.

The bearing temperature usually rises after you regrease due to an excess supply of grease. Temperatures return to normal in about two to four operating hours as the pump runs and purges the excess grease from the bearings.

Lubricating-grease requirements

Precautions

NOTICE:

- Never mix greases of different consistencies (NLGI 1 or 3 with NLGI 2) or with different thickeners. For example, never mix a lithium-based grease with a polyurea-based grease. Doing so may result in decreased performance.
- Remove the bearings and old grease if you need to change the grease type or consistency. Failure to do so may result in equipment damage or decreased performance.

Bearing temperature

Bearing temperatures are generally about 20Â°F (18Â°C) greater than bearing-housing outer surface temperatures.
This table shows the type of grease required for the operating temperature of the pump.

Bearing temperature	Type of grease
5°F to 230°F (-15°C to 110°C)	Use a lithium-based mineral-oil grease with a consistency of NLGI 2.
Exceed 350°F (177°C)	Use a high-temperature grease. Mineral-oil greases should have oxidation stabilizers and a consistency of NGLI 3.

Grease recommendations based on temperature

Most pumps use Sunoco 2EP grease. High temperature units that can pump fluids with a temperature greater than 350°F (177°C) use Mobil SCH32.
This table shows which brand of grease to use when lubricating the pump.

Brand	When temperature of pumped fluid is less than 350°F (177°C) âM M NLGI consistency 2	When temperature of pumped fluid is greater than350°F (177°C) âM M NLGI consistency 3
Mobil	Mobilux EP2	SCH32
Exxon	Unirex N2	Unirex N3
Sunoco	Mutipurpose 2EP	N/A
SKF	LGMT 2	LGMT 3

Lubricate the bearings after a shutdown period

1. Flush out the bearings and bearing frame with a light oil to remove contaminants.
   During flushing, make sure to rotate the shaft slowly by hand.
2. Flush the bearing housing with the proper lubricating oil to ensure oil quality after cleaning.
3. Refer to "Reassembly" section for proper bearing greasing procedure.

Shaft seal maintenance

Mechanical-seal maintenance

WARNING:
The mechanical seal used in an Ex-classified environment must be properly certified. Prior to startup, make sure that all areas that could leak pumped fluid to the work environment are closed.

CAUTION:
Never operate the pump without liquid supplied to mechanical seal. If you run a mechanical seal dry, even for a few seconds, this can cause seal damage. Physical injury can occur if a mechanical seal fails.

Cartridge-type mechanical seals

Cartridge-type mechanical seals are commonly used. Cartridge seals are preset by the seal manufacturer and require no field settings. Cartridge seals installed by the user require disengagement of the holding clips prior to operation, allowing the seal to slide into place. If the seal has been installed in the pump by ITT, these clips have already been disengaged.

Other mechanical seal types

For other types of mechanical seals, refer to the instructions provided by the seal manufacturer for installation and setting.

Reference drawing

The manufacturer supplies a reference drawing with the data package. Keep this drawing for future use when you perform maintenance and seal adjustments. The seal drawing specifies the required flush fluid and attachment points.

Before you start the pump

Check the seal and all flush piping.

Mechanical seal life

The life of a mechanical seal depends on the cleanliness of the pumped fluid. Due to the diversity of operating conditions, it is not possible to give definite indications as to the life of a mechanical seal.

Packed stuffing-box maintenance

WARNING:
- Packed stuffing boxes are not allowed in an ATEX-classified environment.
- Never attempt to replace the packing until the driver is properly locked out and the coupling spacer is removed.

Accepted leakage rate

It is not necessary to shut down or disassemble the pump to inspect the packing operation. During normal operation, the packing should leak approximately one drop per second.

Adjustment of gland

Adjust the gland if the leakage rate is greater than or less than the specified rate.

Evenly adjust each of the two gland bolts with a one-quarter (1/4) turn until the desired leakage rate is obtained. Tighten the bolts to decrease the rate. Loosen the bolts to increase the rate.

Tightening of packing

NOTICE: Never over-tighten packing to the point where less than one drop per second is observed. Over-tightening can cause excessive wear and power consumption during operation.

If you cannot tighten the packing to obtain less than the specified leakage rate, then replace the packing.

Dynamic-seal maintenance

WARNING:
Dynamic seals are not allowed in an ATEX-classified environment.

About the dynamic seal

Dynamic seal parts do not wear substantially to affect operation and do not require maintenance unless the service is particularly abrasive or corrosive.

Repeller

The dynamic repeller prevents pumpage leaks through the stuffing box when the pump operates under published acceptable conditions.

Static seal

A static seal prevents leakage when the pump is shut down. A static seal is either of the following:

- a lip seal
- an elastomeric-face seal
- graphite packing

The only maintenance that the lip seal and the elastomeric-face seal require is replacement when leakage becomes excessive.

The graphite packing should be installed as stuffing-box packing and is designed to run dry.

Disassembly

Disassembly precautions

WARNING:

- This manual clearly identifies accepted methods for disassembling units. These methods must be adhered to. Trapped liquid can rapidly expand and result in a violent explosion and injury. Never apply heat to impellers, propellers, or their retaining devices to aid in their removal unless explicitly stated in this manual.
- Always disconnect and lock out power to the driver before you perform any installation or maintenance tasks. Failure to disconnect and lock out driver power will result in serious physical injury.
  - Electrical connections must be made by certified electricians in compliance with all international, national, state, and local rules.
  - Refer to driver/coupling/gear manufacturers installation and operation manuals (IOM) for specific instructions and recommendations.
- Crush hazard. The unit and the components can be heavy. Use proper lifting methods and wear steel-toed shoes at all times.
- The pump can handle hazardous and toxic fluids. Identify the contents of the pump and observe proper decontamination procedures in order to eliminate the possible exposure to any hazardous or toxic fluids. Wear the proper personal protective equipment. Potential hazards include, but are not limited to, high temperature, flammable, acidic, caustic, explosive, and other risks. You must handle and dispose of pumped fluid in compliance with the applicable environmental regulations.
- A small amount of liquid will be present in certain areas like the seal chamber.

NOTICE:

- Avoid injury. Worn pump components can have sharp edges. Wear appropriate gloves while handling these parts.
- Make sure that all replacement parts are available before you disassemble the pump for overhaul.

Tools required

In order to disassemble the pump, you need these tools:

- Bearing puller
- Brass drift punch
- Cleaning agents and solvents
- Dial indicators
- Feeler gauges
- Hex wrenches
- Hydraulic press
- Induction heater
- Leveling blocks and shims
- Lifting sling
- Micrometer
- Rubber mallet
- Screwdriver
- Snap-ring pliers
- Torque wrench with sockets
- Wrenches

Drain the pump

CAUTION:
- Allow all system and pump components to cool before you handle them to prevent physical injury.
- If your pump is a Model NM3171, NM3196, 3198, 3298, V3298, SP3298, 4150, 4550, or 3107 there is a possible risk of static electric discharge from plastic parts that are not properly grounded. If the pumped fluid is non-conductive, drain and flush the pump with a conductive fluid under conditions that will not allow for a spark to be released to the atmosphere.

1. Close the isolation valves on the suction and discharge sides of the pump.
   You must drain the system if no valves are installed.
2. Open the drain valve.
   Do not proceed until liquid stops coming out of the drain valve. If liquid continues to flow from the drain valve, the isolation valves are not sealing properly and you must repair them before you proceed.
3. Leave the drain valve open and remove the drain plug located on the bottom of the pump housing.
   Do not reinstall the plug or close the drain valve until the reassembly is complete.
4. Drain the liquid from the piping and flush the pump if it is necessary.
5. Disconnect all auxiliary piping and tubing.
6. Remove the coupling guard.

Remove the coupling

1. Disconnect the coupling.
2. Remove the C-face adapter.
3. Remove the coupling-guard pump end-plate.

Remove the back pull-out assembly

CAUTION:
Never remove the back pull-out assembly without assistance.

1. Is your bearing frame oil lubricated?
   - If No: Proceed to step 2.
   - If Yes:
     1. Remove the bearing-frame drain plug (408A) in order to drain oil from the bearing frame.
     2. Replace the plug after the oil is drained.

3. Remove the oil reservoir, if equipped.

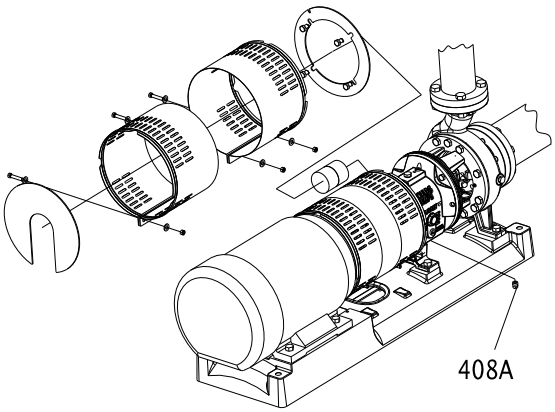

NOTICE:
Oil analysis should be part of a preventive maintenance program that determines the cause of a failure. Save the oil in a clean container for inspection.

2. Does your pump use a C-face adapter?
   - If Yes: Place one sling from the hoist through the frame adapter (108) or frame (228A) for the STi and a second sling from the hoist through the C-face adapter.
   - If No: Place a sling from the hoist through the frame adapter (108) or the frame (228A) for the STi.

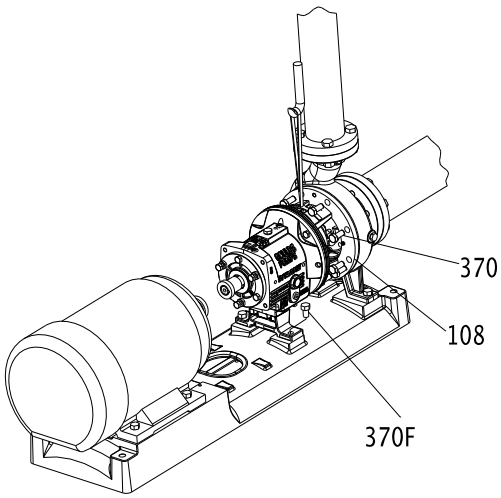

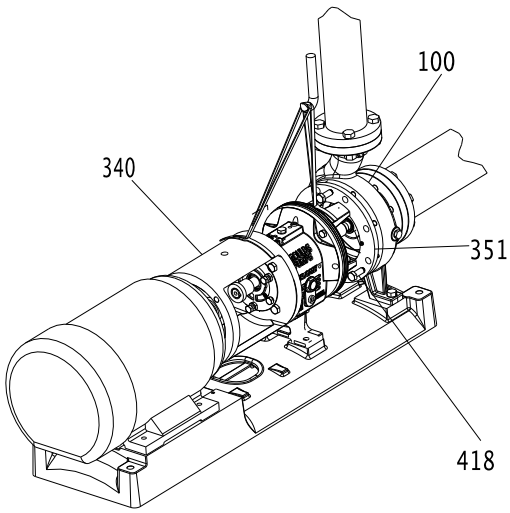

3. Remove the hold-down bolts of the bearing frame foot.
4. Remove the casing bolts.

WARNING:
- Never use heat to disassemble the pump due to the risk of an explosion from trapped liquid.

5. Tighten the jackscrews evenly, using an alternating pattern, in order to remove the back pull-out assembly.
   You can use penetrating oil if the adapter to the casing joint is corroded.
6. Remove the back pull-out assembly from the casing (100).
7. Mark and remove the shims from under the frame foot and save them for reassembly.
8. Remove and discard the casing gasket.
   You will insert a new casing gasket during reassembly.
9. Remove the jackscrews.
10. Clean all gasket surfaces.
    Clean surfaces prevent the casing gasket from partially adhering to the casing due to binders and adhesives in the gasket material.

Remove the coupling hub

1. Clamp the frame adapter securely to the workbench.
2. Remove the coupling hub.
   Mark the shaft for relocation of the coupling hub during reassembly.

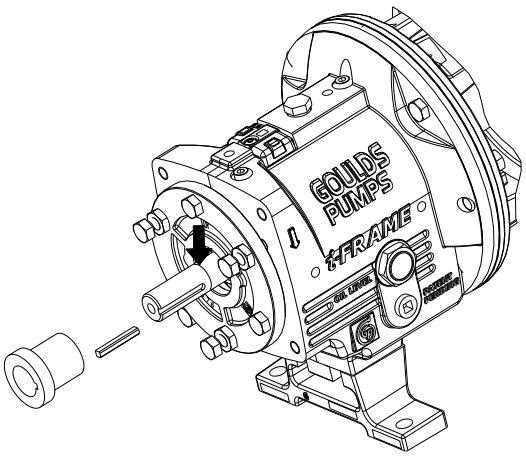

Impeller removal

Remove the impeller (STi, MTi, and LTi)

WARNING:
Never apply heat to remove an impeller. The use of heat may cause an explosion due to trapped liquid, resulting in severe physical injury and property damage.

CAUTION:
Wear heavy work gloves when you handle impellers. The sharp edges can cause physical injury.

1. Slide the shaft wrench (A05107A or A01676A) over the shaft (122) and key.
2. Rotate the impeller (101) clockwise (viewed from the impeller end of the shaft) and raise the wrench off of the work surface.
3. To loosen the impeller, quickly turn it counter-clockwise (viewed from the impeller end of the shaft) while impacting the wrench handle on the workbench or a solid block.

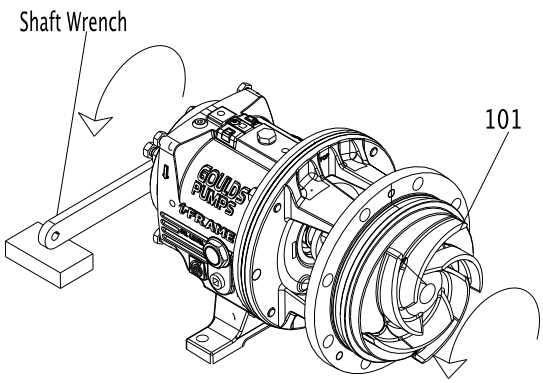

4. Repeat step 3 until the impeller becomes loose.
5. Remove and discard the impeller O-ring (412A).
   You will insert a new O-ring during reassembly.

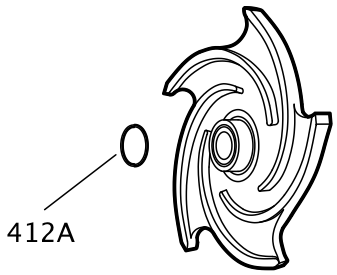

Figure 19: O-ring for models 3196, HT 3196, NM 3196, 3198, and 3796

If the impeller cannot be removed by the previous methods, cut the shaft between the gland and the frame, remove the impeller, stuffing-box cover, gland, sleeve, and shaft end as a unit. Do not apply heat.

Remove the impeller (XLT-i, and i17)

WARNING:
Never apply heat to remove an impeller. The use of heat may cause an explosion due to trapped liquid, resulting in severe physical injury and property damage.

CAUTION:
Wear heavy work gloves when you handle impellers. The sharp edges can cause physical injury.

Clamp the frame foot (241) to the workbench when you use this method to remove the impeller.

1. Remove the impeller plug (458Y) from the front of the impeller (101) and discard the Teflon gasket (428D).

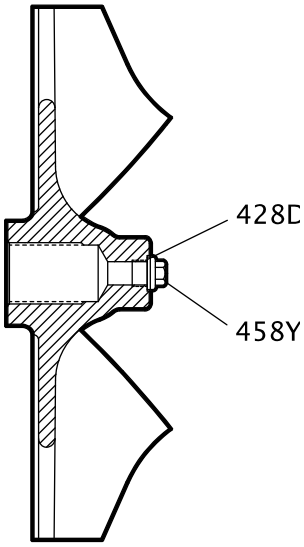

2. Spray penetrating oil through the plug hole into the cavity at the end of the shaft and let it penetrate for 15 minutes.
3. While waiting, rotate the shaft several times to distribute the oil.
4. Slide the shaft wrench (A05107A) over the shaft (122) and key.
5. Rotate the impeller clockwise (viewed from the impeller end of the shaft) and raise the wrench off of the work surface.
6. To loosen the impeller, quickly turn the impeller counter-clockwise (viewed from the impeller end of the shaft) while impacting the wrench handle on the workbench or a solid block.
7. Repeat step 6 until the impeller becomes loose.
8. If step 6 and 7 do not work then do this:
   a) Place a socket wrench over the cast nut on the impeller hub.
   b) Turn the impeller counter-clockwise (viewed from the impeller end of the shaft).

   Be sure that the impeller wrench rests on the workbench or a solid block and that the power end is secure on the work surface.
9. Remove and discard the impeller O-ring (412A).

You will insert a new O-ring during reassembly.

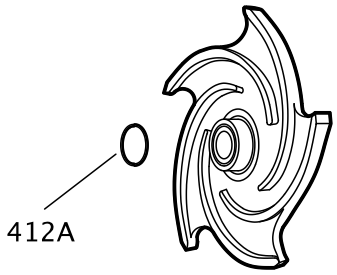

Figure 20: O-ring for models 3196 and HT 3196

If the impeller cannot be removed by the previous methods, cut the shaft between the gland and the frame, remove the impeller, stuffing-box cover, gland, sleeve, and shaft end as a unit. Do not apply heat.

Seal-chamber cover removal

Seal-chamber removal procedures

Choose from one of these procedures to remove the seal-chamber cover.

Table 10: Procedures for seal-chamber cover removal by model

Model	Procedure
3196, CV 3196, HT 3196, LF 3196, 3796	Remove the seal-chamber cover.
NM 3196, 3198	Remove the seal-chamber cover and/or backplate.

Remove the seal-chamber cover (3196, CV 3196, HT 3196, LF 3196, 3796)

1. Remove the gland stud nuts (355).
2. Remove the seal-chamber stud nuts (370H).
3. Remove the seal chamber (184).

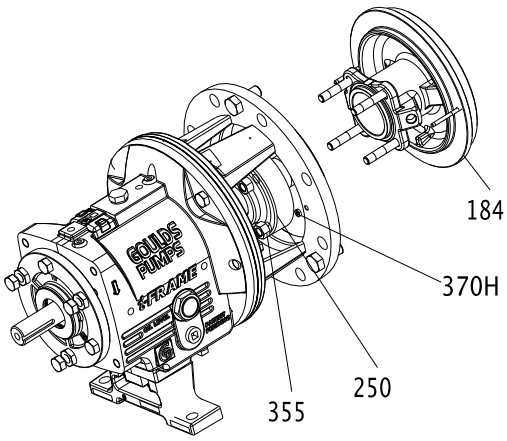

4. Remove the shaft sleeve (126) if it is used.
   The mechanical seal is attached to the sleeve.

NOTICE:
Be careful with the stationary portion of the mechanical seal that is either clamped between the backplate and the gland or seated in the seal-chamber bore. Failure to do so may result in equipment damage.

5. Remove the rotary portion of the seal from the sleeve by loosening the setscrews and sliding it off the sleeve.
   Refer to the mechanical-seal instructions for more information.
6. Remove the gland (250), the stationary portion of the seal, and the O-ring (360Q).

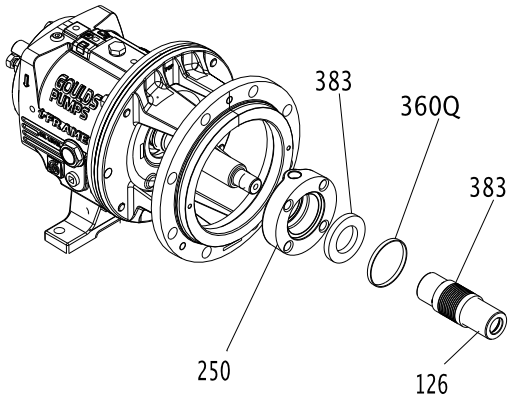

Remove the stuffing-box cover (3196, CV 3196, HT 3196, LF 3196, 3796)

1. Remove the gland nuts (355) and the gland (107).
2. Remove the stuffing-box-cover nuts (370H).
3. Remove the stuffing-box cover (184).

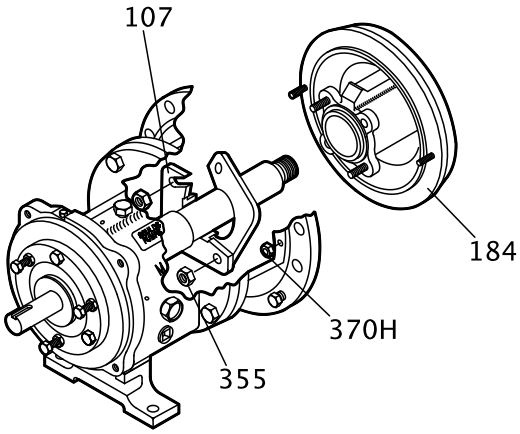

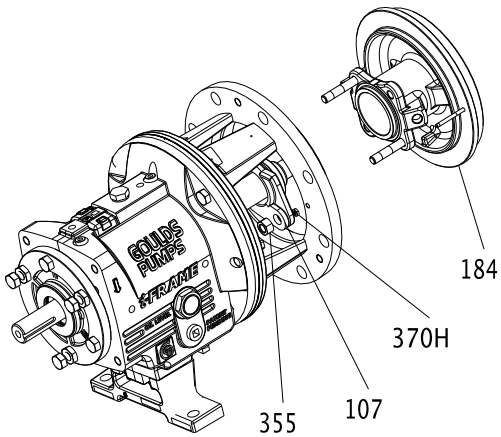

4. Remove the shaft sleeve (126).

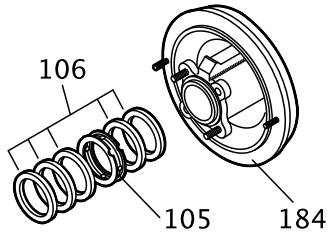

5. Remove the packing (106) and lantern ring (105) from the stuffing-box cover (184). A lantern ring does not come with self-lubricating graphite packing.

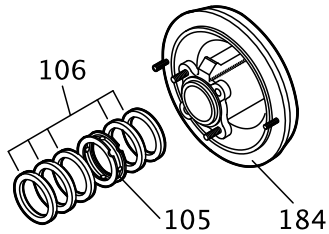

Remove the dynamic seal

1. Remove the stud nuts (370H).
2. Remove the dynamic-seal assembly.

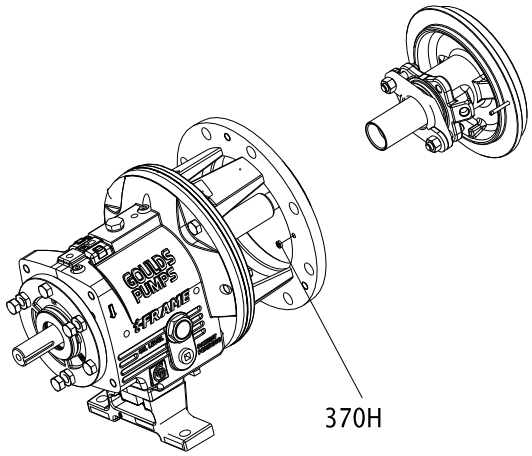

3. Remove the socket head cap screws (265).
4. Remove the packed stuffing box cover (184) and gasket (264).
5. Remove the repeller (262) from the backplate (444).

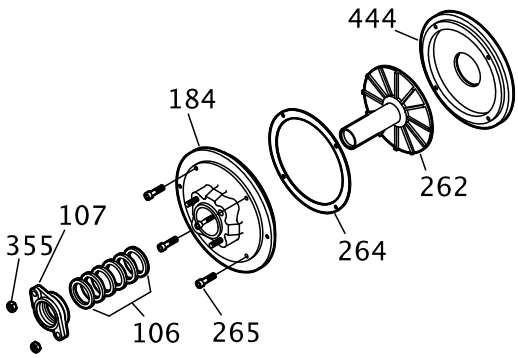

Remove the frame adapter (MTi, LTi, XLT-i, i17)

The 3198 frame adapter is not interchangeable with the adapter of any other model.

1. Remove the dowel pins (469B) and the bolts (370B).
2. Remove the frame adapter (108).
3. Remove and discard the gasket (360D).
   You will install a new gasket during reassembly.

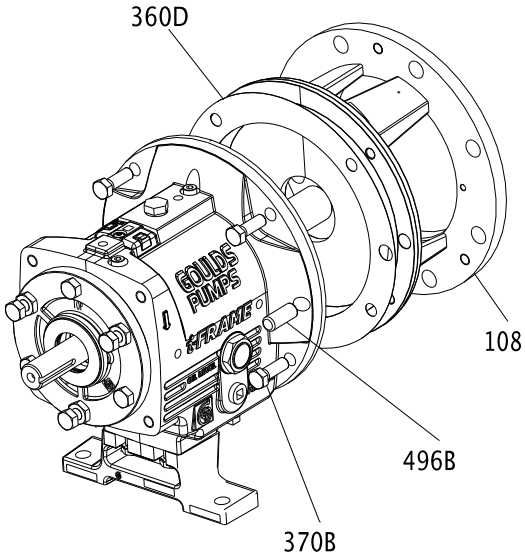

Remove the inboard labyrinth oil seal

Labyrinth oil-seal O-rings are part of the 3196 maintenance kits, and they are sold separately.

1. Determine the fit of your labyrinth oil seal.

Table 11: Labyrinth oil-seal fit

Model	Type of fit
STi	O-ring fit into the bearing-frame adapter (228A)
MTi, LTi, XLT-i and i17	O-ring fit into the frame adapter

2. Remove the O-rings (497H and 497J) and the seal (333A).

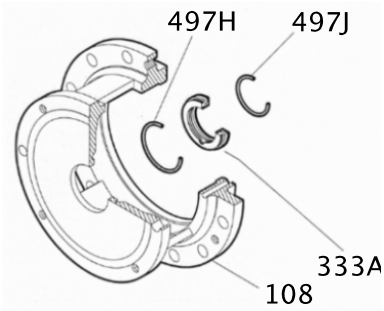

Power-end disassembly

Disassemble the power end (STi, MTi)

1. Remove the clamp screws (370C) and back off the jam nuts (423).
2. Tighten the jack screws (370D) evenly to move the bearing housing (134) out of the bearing frame (228A).

3. Remove the shaft assembly from the bearing frame (228A).

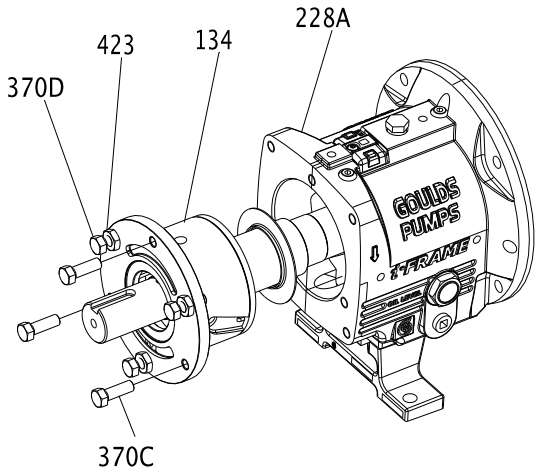

4. Remove the jack screws (370D) with nuts (423).
5. Remove the bearing housing O-ring (496) and the bearings.
6. Remove the outboard bearing retaining snap ring (361A).

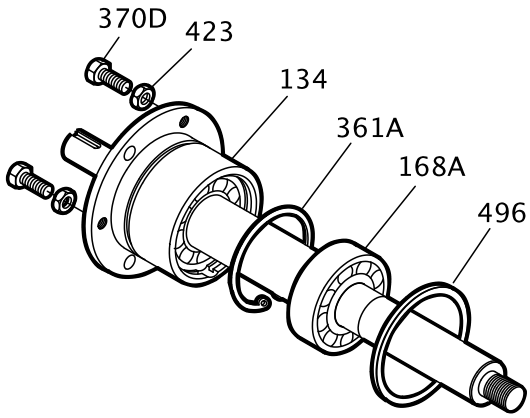

7. Remove the bearing housing (134) and bearings (112A and 168A) from the shaft (122).

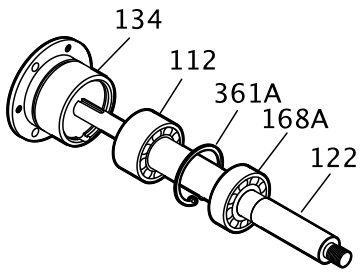

8. Remove the bearing locknut (136) and bearing lock washer (382).
9. Remove the inboard bearing (168A).
10. Remove the outboard bearing (112A).

NOTICE:
Use force only on the inner race when you press bearings off the shaft. Do not use force in situations in which you might break a part. Doing so may result in equipment damage.

NOTICE:
Save the bearings for inspection. Do not reuse the bearings. Doing so may result in decreased performance.

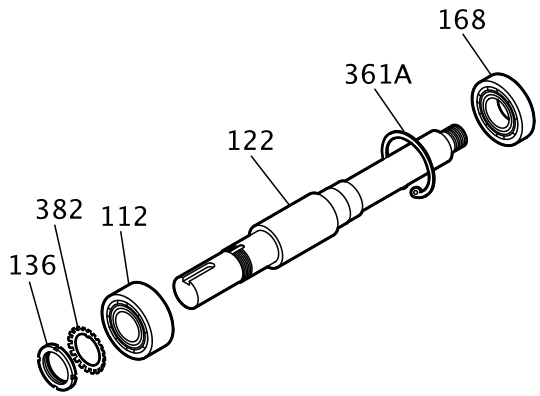

Disassemble the power end (STi and MTi with duplex bearings)

1. Remove the clamp screws (370C) and back off the jam nuts (423).
2. Tighten the jack screws (370D) evenly to move the bearing housing (134) out of the bearing frame (228A).
3. Remove the shaft assembly from the bearing frame (228A).

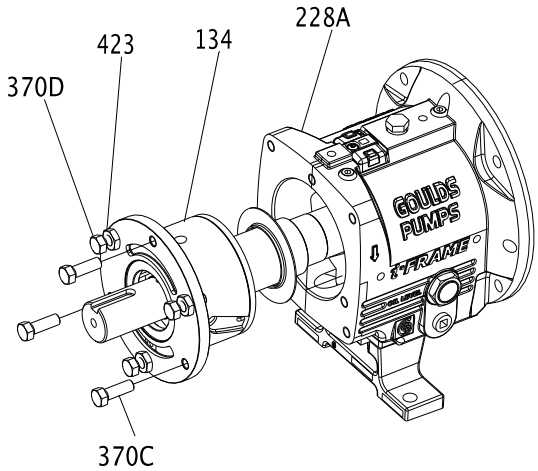

4. Remove the jack screws (370D) with the nuts (423).

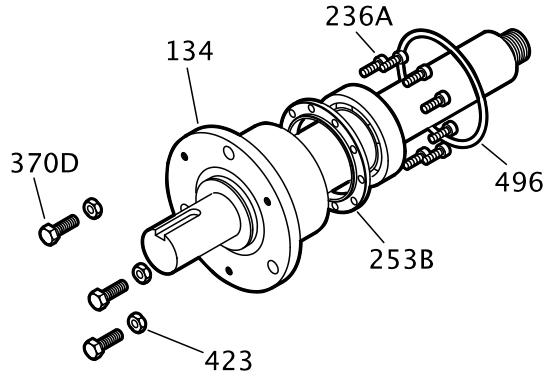

5. Remove the bearing housing O-ring (496).
6. Remove the clamp ring screws (236A) and separate the clamp ring (253B) from the bearing housing (134).
   You must remove the bearings before you can remove the clamp ring from the shaft.
7. Remove the bearing housing (134) and the bearings (112A and 168A) from the shaft (122).

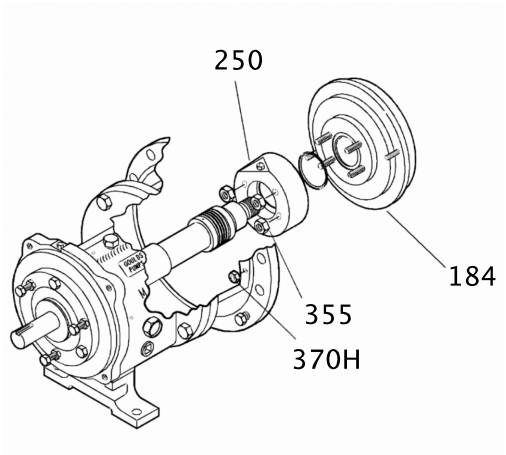

8. Remove the inboard bearing (168A).

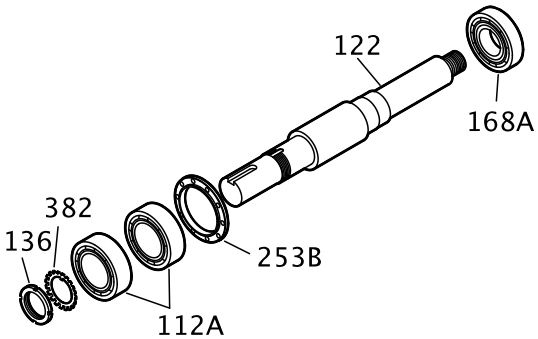

9. Remove the bearing locknut (136) and bearing lockwasher (382).
10. Remove the outboard bearings (112A).

NOTICE:
Use force only on the inner race when you press bearings off the shaft. Do not use force in situations in which you might break a part. Doing so may result in equipment damage.

NOTICE:
Save the bearings for inspection. Do not reuse the bearings. Doing so may result in decreased performance.

11. Remove the outboard labyrinth oil seal (332A) from the bearing housing (134).

Remove the O-rings (497F and 497G) if it is necessary. Labyrinth oil seal O-rings are part of the 3196 maintenance kits and they are sold separately.

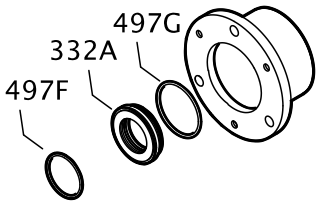

Disassemble the power end (LTi)

1. Remove the clamp screws (370C) and back off the jam nuts (423).
2. Evenly tighten the jack screws (370D) to move the bearing housing (134) out of the bearing frame (228A).
3. Remove the shaft assembly from the bearing frame (228A).

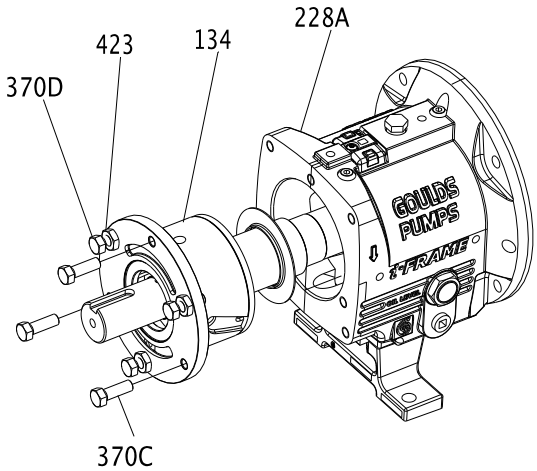

4. Remove the jack screws (370D) with the nuts (423).
5. Remove the clamp-ring screws (236A) and separate the clamp ring (253B) from the bearing housing (134).
   You must remove the bearings before you can remove the clamp ring from the shaft.

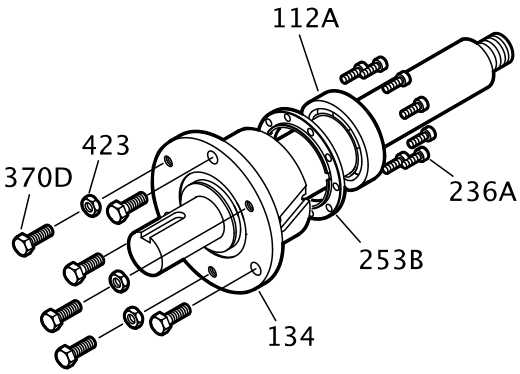

6. Remove the bearing housing (134) and the bearings (112A and 168A) from the shaft (122).

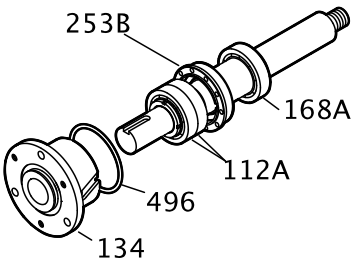

7. Remove the bearing housing O-ring (496) and the inboard bearing (168A).

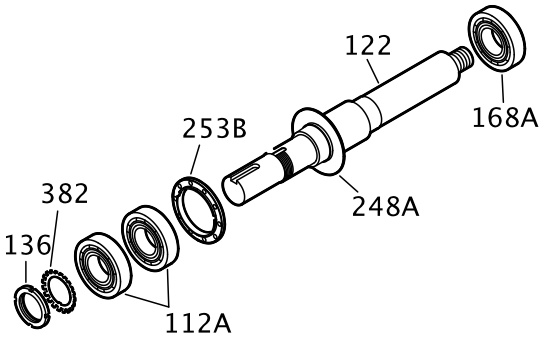

8. Remove the bearing locknut (136) and the bearing lockwasher (382).
9. Remove the outboard bearings (112A) and the clamp ring (253B).

NOTICE:
Do not remove the oil flinger unless it is damaged. Doing so may result in unnecessary shutdown time or equipment damage.

NOTICE:
Use force only on the inner race when you press bearings off the shaft. Do not use force in situations in which you might break a part. Doing so may result in equipment damage.

NOTICE:
Save the bearings for inspection. Do not reuse the bearings. Doing so may result in decreased performance.

10. Remove the outboard labyrinth oil seal (332A) from the bearing housing (134).
11. Remove the O-rings (497F and 497G) if it is necessary.

Labyrinth oil-seal O-rings are part of the 3196 maintenance kits, and they are sold separately.

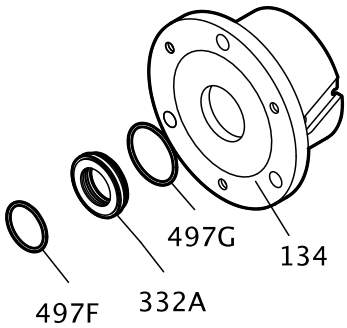

Disassemble the power end (XLT-i and i17)

1. Remove the bearing frame from the frame foot (241) using the frame-foot bolts (370F).

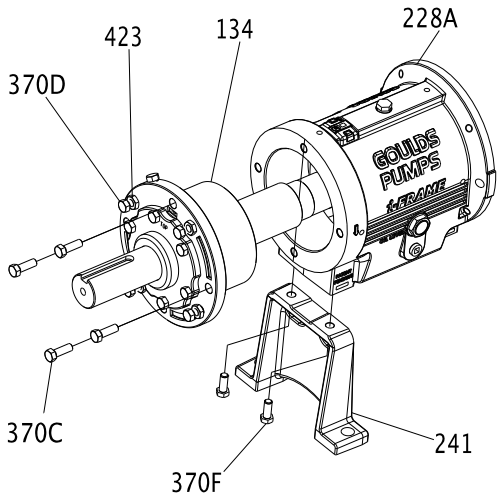

2. Remove the clamp screws (370C) and back off the jam nuts (423).
3. Tighten the jack screws (370D) evenly to move the bearing housing (134) out of the bearing frame (228A).
4. Remove the shaft assembly from the bearing frame (228A).
5. Remove the jack screws (370D), the nuts (423), and the bearing housing O-ring.
6. Remove the inboard bearing (168A).

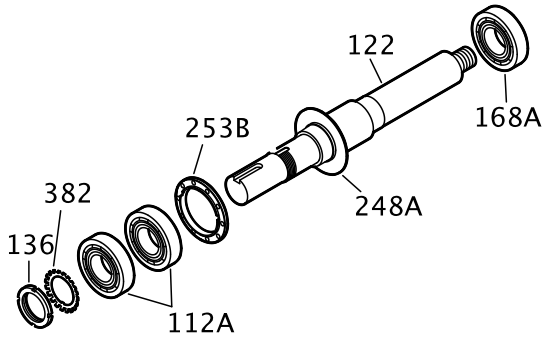

7. Remove the bolts (371C), the bearing end cover (109A), and the gasket (360C).
8. Remove the outboard labyrinth oil seal (332A) from the end cover (109A).

9. Remove the O-rings (497F and 497G) if it is necessary.
   Labyrinth oil-seal O-rings are part of the 3196 maintenance kits, and they are sold separately.

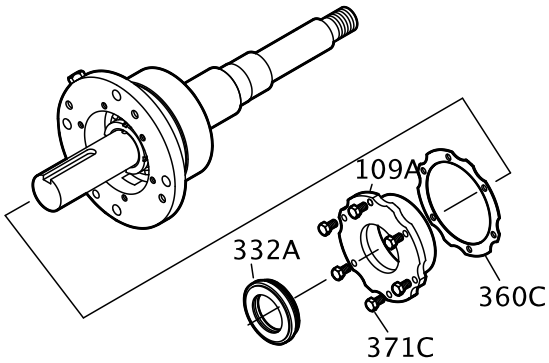

10. Remove the bearing housing (134) and the bearing (112A) from the shaft (122).

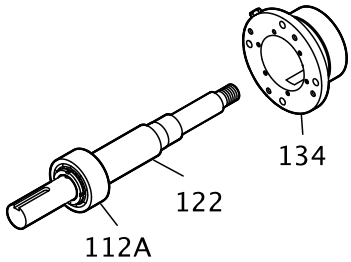

11. Remove the bearing locknut (136), the bearing lockwasher (382), and the outboard bearing (112A).

NOTICE:
Use force only on the inner race when you press bearings off the shaft. Do not use force in situations in which you might break a part. Doing so may result in equipment damage.

NOTICE:
Save the bearings for inspection. Do not reuse the bearings. Doing so may result in decreased performance.

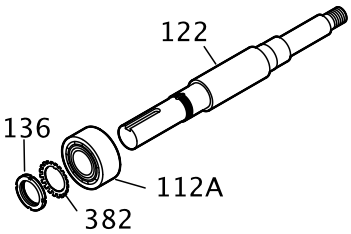

Disassemble the power end (XLT-i and i17 with duplex bearings)

1. Remove the bearing frame to frame foot (241) using the frame-foot bolts (370F).

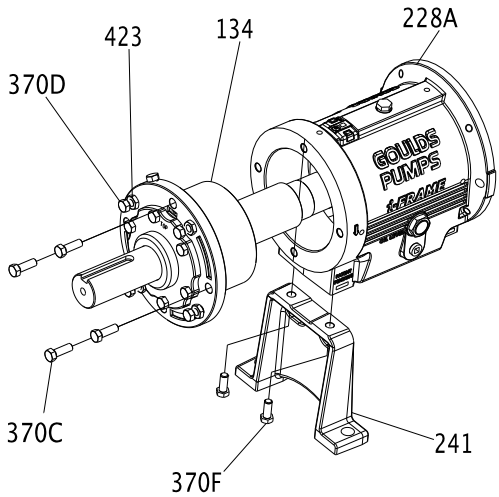

2. Remove the clamp screws (370C) and back off the jam nuts (423).
3. Tighten the jack screws (370D) evenly to move the bearing housing (134) out of the bearing frame (228A).
4. Remove the shaft assembly from the bearing frame (228A).
5. Remove the jack screws (370D) and the nuts (423).
6. Remove the bearing housing O-ring (496) and the inboard bearing (168A).

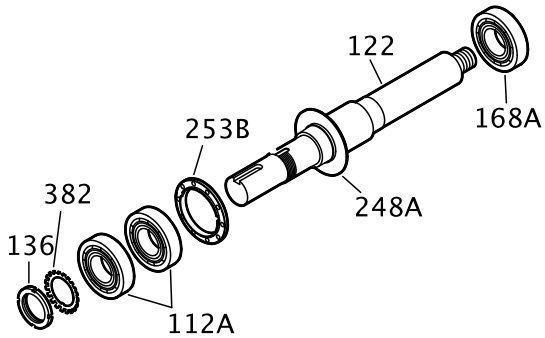

7. Remove the bolts (371C), the end cover (109A), and the gasket (360C).
8. If necessary, remove the outboard labyrinth oil seal (332A) from the end cover (109A) and remove the O-rings (497F and 497G).

Labyrinth oil-seal O-rings are part of the 3196 maintenance kits, or they are sold separately.

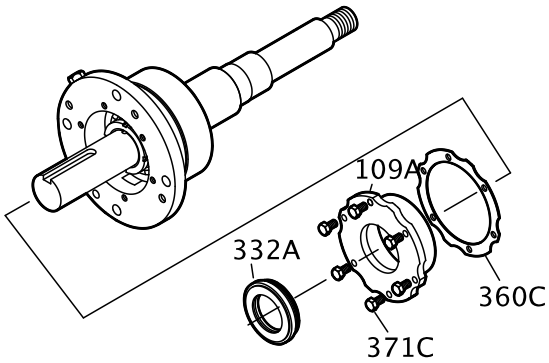

9. Remove the bearing housing (134) and bearings (112A) from the shaft (122) .

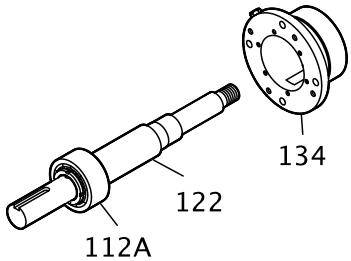

10. Remove the bearing locknut (136), the bearing lockwasher (382), and the outboard bearing (112A).

NOTICE:
Use force only on the inner race when you press bearings off the shaft. Do not use force in situations in which you might break a part. Doing so may result in equipment damage.

NOTICE:
Save the bearings for inspection. Do not reuse the bearings. Doing so may result in decreased performance.

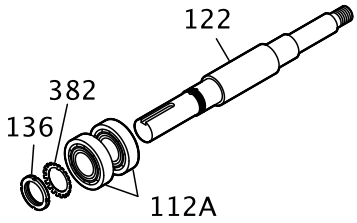

Disassemble the bearing frame

1. Remove these plugs from the bearing frame (228A).
   - oil-fill plug (113A)
   - oil-drain plug (408A)
   - sight-oiler plug (408J)
   - four oil mist/grease connection plugs (408H)
   - oil-cooler inlet and outlet plugs (408L and 408M) or oil cooler

2. For the MTi and LTi models, remove the bearing frame foot-to-frame bolts (370F) and the frame foot (241).

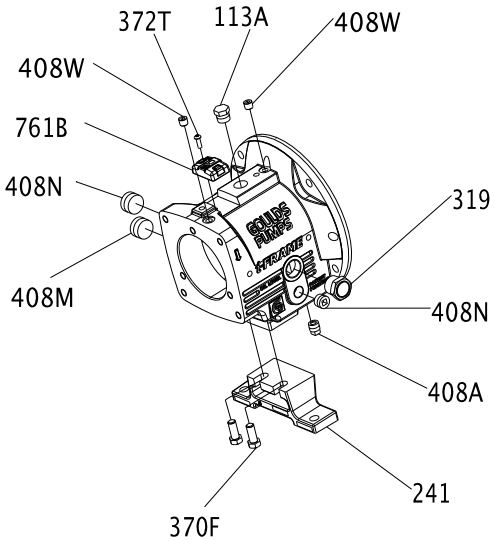

Guidelines for i-ALERT™ Condition Monitor disposal

Precautions

WARNING:
- Never heat the condition monitor to temperatures in excess of 300°F (149°C). Heating to these temperatures could result in death or serious injury.
- Never dispose of the condition monitor in a fire. This could result in death or serious injury.

Guidelines

The battery contained in the condition monitor does not contain enough lithium to qualify as reactive hazardous waste. Use these guidelines when disposing of the condition monitor.

- The condition monitor is safe for disposal in the normal municipal waste stream.
- Adhere to local laws when you dispose of the condition monitor.

Disassemble the C-face adapter

NOTICE:
You must properly support the motor with a clean, uncorroded eye bolt or a strap under both end bells. Failure to do so may result in equipment damage.

1. Loosen the motor-mounting bolts and remove the motor.

   Table 12: Required number of motor-mounting bolts
   This table shows the number of motor-mounting bolts.

Pump frame	Motor frame	Number of bolts
STi	All	4
MTi and LTi	143-286	4
	324-365	8

2. Loosen the bolts attached to the bearing-frame flange and remove the C-face adapter from the bearing frame.

Pre-assembly inspections

Guidelines

Before you assemble the pump parts, make sure you follow these guidelines:

- Inspect the pump parts according to the information in these pre-assembly topics before you reassemble your pump. Replace any part that does not meet the required criteria.
- Make sure that the parts are clean. Clean the pump parts in solvent in order to remove oil, grease, and dirt.

NOTICE:
Protect machined surfaces while you clean the parts. Failure to do so may result in equipment damage.

Replacement guidelines

Casing check and replacement

WARNING:
Avoid death or serious injury. Leaking fluid can cause fire and/or burns. Inspect and assure gasket sealing surfaces are not damaged and repair or replace as necessary.

Inspect the casing for cracks and excessive wear or pitting. Thoroughly clean gasket surfaces and alignment fits in order to remove rust and debris.

Repair or replace the casing if you notice any of these conditions:

- Localized wear or grooving that is greater than 1/8 in. (3.2 mm) deep
- Pitting that is greater than 1/8 in. (3.2 mm) deep
- Irregularities in the casing-gasket seat surface

Casing areas to inspect

The arrows point to the areas to inspect for wear on the casing:

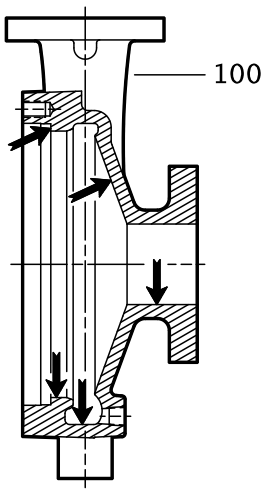

Figure 21: 3196, HT 3196, LF 3196, NM 3196, and 3198 casing

Impeller replacement

This table shows the criteria for replacing the impeller:

Impeller parts	When to replace
Impeller vanes	• When grooved deeper than 1/16 in. (1.6 mm), or • When worn evenly more than 1/32 in. (0.8 mm)
Pumpout vanes	When worn or bent more than 1/32 in. (0.8 mm)
Vane edges	When you see cracks, pitting, or corrosion damage

Impeller areas to inspect

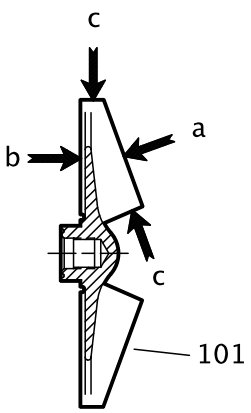

Figure 22: Areas to inspect for wear on the 3196 impeller.

Frame adapter check and replacement

- Replace the frame adapter if it has cracks or excessive corrosion damage.
- Make sure the gasket surface is clean.

Dynamic-seal repeller replacement

This table shows the criteria for replacing dynamic-seal repeller parts for the 3196, CV 3196, and LF 3196 pump models.

Dynamic seal part	When to replace
Dynamic-seal repeller vane	The grooves are deeper than 1/16 in. (1.6 mm) or are worn evenly more than 1/32 in. (0.8 mm).
Sleeve surface	The surface has grooves, pitting, or other damage.

Labyrinth seal replacement

Replace the labyrinth-seal O-ring if it has cuts and cracks.

Gaskets, O-rings, and seats replacement

WARNING:
Avoid death or serious injury. Leaking fluid can cause fire and/or burns. Replace any damaged or worn gaskets/o-rings.

- Replace all gaskets and O-rings at each overhaul and disassembly.
- Inspect the seats. They must be smooth and free of physical defects.
  In order to repair worn seats, skin cut them in a lathe while you maintain dimensional relationships with other surfaces.
- Replace parts if the seats are defective.

Shaft and sleeve replacement guidelines

Two types of sleeves

The 3198 is offered with either a metallic sleeve that uses the standard 3196 shaft or a Teflon sleeve. The Teflon sleeve requires a special shaft and a different inboard labyrinth oil seal.

Shaft measurements check

Replace the shaft (122) if any measurements exceed acceptable values. See Bearing fits and tolerances.

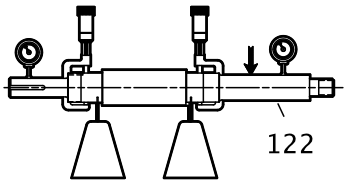

Straightness check

Replace the shaft (122) if runout exceeds the values in this table:

Table 13: Shaft runout tolerances for sleeve fit and coupling fit

	Sleeve fit in inches (millimeters)	Coupling fit in inches (millimeters)
With sleeve	0.001 (0.025)	0.001 (0.025)
Without sleeve	0.002 (0.051)	0.001 (0.025)

Shaft and sleeve check

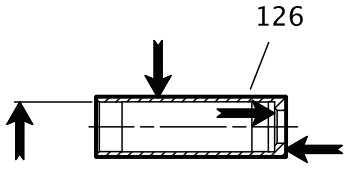

- Check the shaft and sleeve (126) surface for grooves and pitting.
- Replace the shaft and sleeve if any grooves or pits are found.

Bearing-frame inspection

Checklist

Check the bearing frame for these conditions:

- Visually inspect the bearing frame and frame foot for cracks.
- Check the inside surfaces of the frame for rust, scale, or debris. Remove all loose and foreign material.
- Make sure that all lubrication passages are clear.
- If the frame has been exposed to pumped fluid, inspect the frame for corrosion or pitting.
- Inspect the inboard-bearing bores.
  If any bores are outside the measurements in the Bearing fits and tolerances table, replace the bearing frame.

Surface inspection locations

This figure shows the areas to inspect for wear on the bearing frame outside surface.

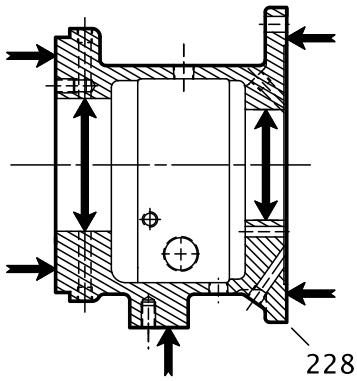

Figure 23: Outside surface inspection locations

This figure shows the areas to inspect for wear on the bearing frame inside surface.

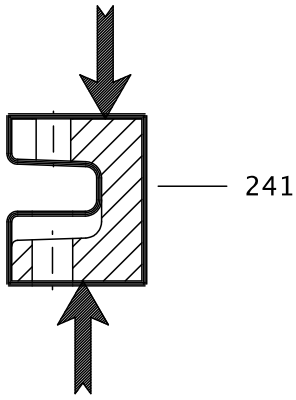

Figure 24: Inside surface inspection locations

C-face adapter inspection

Checklist

- Visually inspect the C-face adapter (340) for cracks.
- Check all surfaces for rust, scale, or debris and remove all loose and foreign material.
- Check for corrosion or pitting.

This figure shows the areas to inspect for cracks on the C-face adapter.

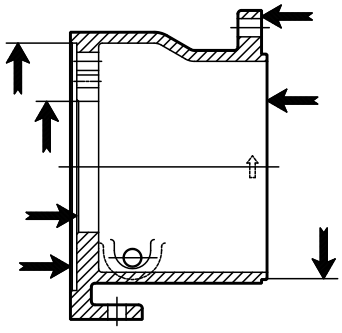

Figure 25: C-face adapter inspection locations

Seal chamber and stuffing box cover inspection

Checklist

Perform these checks when you inspect the seal chamber and stuffing box cover:

- Make sure that these surfaces are clean:
  - Seal chamber and stuffing box cover
  - Dynamic-seal backplate gasket
  - Mounting
- Make sure there is no pitting or wear greater than 1/8 in. (3.2 mm) deep. Replace the seal chamber and stuffing box cover if pitting or wear exceeds this measurement.
- Inspect the machined surfaces and mating faces noted in the figures.

These images point to the areas to inspect:

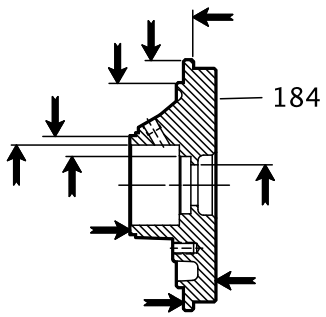

Figure 26: BigBore™ chamber

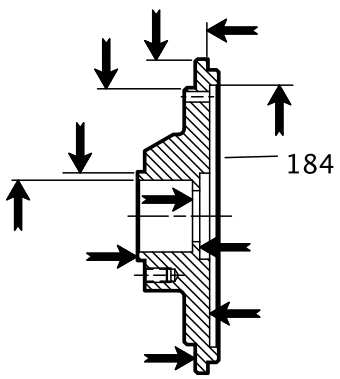

Figure 27: Stuffing box cover

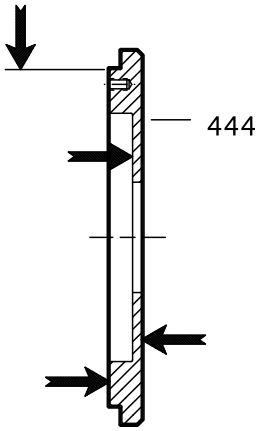

Figure 28: Dynamic-seal backplate

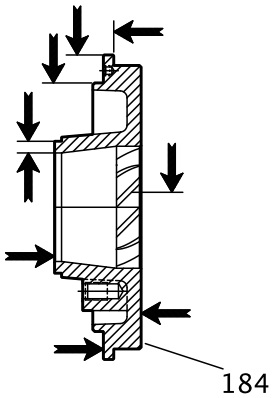

Figure 29: TaperBore™ Plus

Bearings inspection

Condition of bearings

Do not reuse bearings. The condition of the bearings provides useful information on operating conditions in the bearing frame.

Checklist

Perform these checks when you inspect the bearings:

- Inspect the bearings for contamination and damage.
- Note any lubricant condition and residue.
- Inspect the ball bearings to see if they are loose, rough, or noisy when you rotate them.
- Investigate any bearing damage to determine the cause. If the cause is not normal wear, correct the issue before you return the pump to service.

Bearing-housing inspection

Checklist

- Inspect the bearing-housing (134) bore according to the bearing fits and tolerances table.

- Replace the bearing housing if the dimensions exceed acceptable values. Reference: see Bearings fits and tolerances.
- Visually inspect the bearing housing for cracks and pits.

Checklist for specific models

This table shows bearing-housing checks that are required for specific models of pump.

Frame	Bearing-housing check
STi and MTi	Ensure that the snap-ring groove is not cracked.
LTi	Clear all grooves and holes.
XLT-i and i17	Clean the gasket surface.

Inspection locations

The following images point to the areas to inspect on the bearing housing.

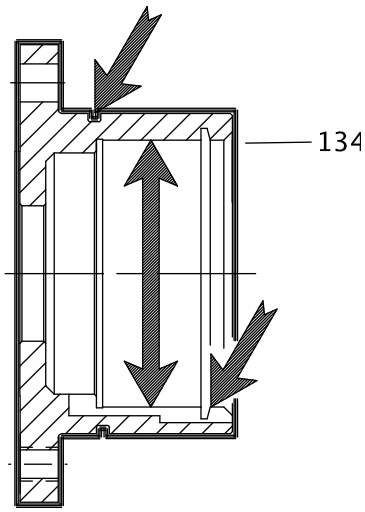

Figure 30: STi and MTi bearing housing

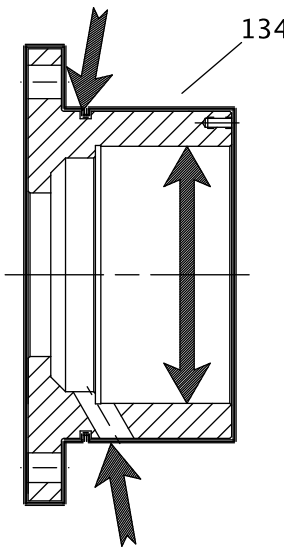

Figure 31: LTi bearing housing

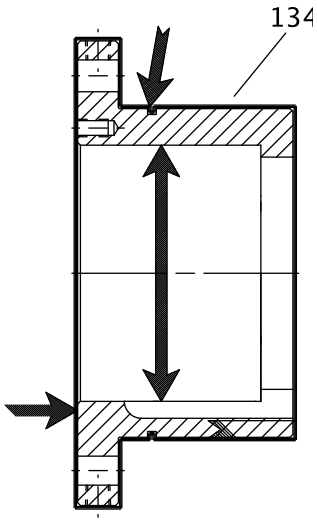

Figure 32: XLT-i and i17 bearing housing

Bearing fits and tolerances

Table 14: Bearing fits and tolerances table

This table references the bearing fits and tolerances according to the ABEC I standard.

	STi inches (millimeters)	**MTi inches (millimeters)**	**LTi inches (millimeters)**	**XLT-i, i-17 inches (millimeters)**
Shaft OD Inboard	1.3785 (35.014) 1.3781 (35.004)	1.7722 (45.014) 1.7718 (45.004)	2.1660 (55.016) 2.1655 (55.004)	2.5597 (65.016) 2.5592 (65.004)
Clearance	0.0010 (0.025) tight 0.0001 (0.003) tight	0.0010 (0.025) tight 0.0001 (0.003) tight	0.0012 (0.030) tight 0.0001 (0.003) tight	0.0012 (0.030) tight 0.0001 (0.003) tight
Bearing ID Inboard	1.3780 (35.001) 1.3775 (34.989)	1.7717 (45.001) 1.7712 (44.988)	2.1654 (55.001) 2.1648 (54.986)	2.5591 (65.001) 2.5585 (64.986)
Frame ID Inboard	2.8346 (72.000) 2.8353 (72.017)	3.9370 (100.000) 3.9379 (100.023)	4.7244 (120.000) 4.7253 (120.023)	5.5118 (140.000) 5.5128 (140.025)
Clearance	0.0012 (0.031) loose 0.0000 (0.000) loose	0.0015 (0.038) loose 0.0000 (0.000) loose	0.0015 (0.038) loose 0.0000 (0.000) loose	0.0017 (0.043) loose 0.0000 (0.000) loose
Bearing OD Inboard	2.8346 (72.000) 2.8341 (71.986)	3.9370 (100.000) 3.9364 (99.985)	4.7244 (120.000) 4.7238 (119.985)	5.5118 (140.000) 5.5111 (139.982)
Shaft OD Outboard	1.1815 (30.010) 1.1812 (30.002)	1.7722 (45.014) 1.7718 (45.004)	1.9690 (50.013) 1.9686 (50.003)	2.5597 (65.016) 2.5592 (65.004)
Clearance	0.0008 (0.020) tight 0.0001 (0.003) tight	0.0010 (0.025) tight 0.0001 (0.003) tight	0.0010 (0.025) tight 0.0001 (0.003) tight	0.0012 (0.030) tight 0.0001 (0.003) tight
Bearing OD Outboard	1.1811 (30.000) 1.1807 (29.990)	1.7717 (45.001) 1.7712 (44.988)	1.9685 (50.000) 1.9680 (49.987)	2.5591 (65.001) 2.5585 (64.986)
Housing OD Outboard	2.8346 (72.000) 2.8353 (72.017)	3.9370 (100.000) 3.9379 (100.022)	4.3307 (110.000) 4.3316 (110.023)	5.5118 (140.000) 5.5128 (140.025)
Clearance	0.0012 (0.031) loose 0.0000 (0.000) loose	0.0015 (0.038) loose 0.0000 (0.000) loose	0.0015 (0.038) loose 0.0000 (0.000) loose	0.0017 (0.043) loose 0.0000 (0.000) loose
Bearing OD Outboard	2.8346 (72.000) 2.8341 (71.986)	3.9370 (100.000) 3.9364 (99.985)	4.3307 (110.000) 4.3301 (109.985)	5.5118 (140.000) 5.5111 (139.982)

Reassembly

Assemble the rotating element and the bearing frame (STi and MTi)

CAUTION:
Wear insulated gloves when you use a bearing heater. Bearings get hot and can cause physical injury.

NOTICE:
Make sure that the pipe threads are clean, and that you apply thread sealant to the plugs and fittings. Failure to do so may result in equipment damage or decreased performance.

NOTICE:
Use an induction heater that heats as well as demagnetizes the bearings when you install bearings. Failure to do so may result in decreased performance.

1. Prepare the bearing frame (228) as follows (see the illustration):
   a) Install the oil-fill plug (113A).
   b) Install the oil-drain plug (408A).
   c) Install the sight glass (319).
   d) Install the sight oiler plug (408J).
   e) Install the plug for the oil-cooler inlet (408L).
   f) Install the plug for the oil-cooler outlet (408M).
   g) Install four oil-mist connection plugs (408H).
   Or: Install two grease fittings (193) and two grease-relief plugs (113).
   h) Attach the bearing-frame foot (241) and fasten the bolts (370F) by hand.

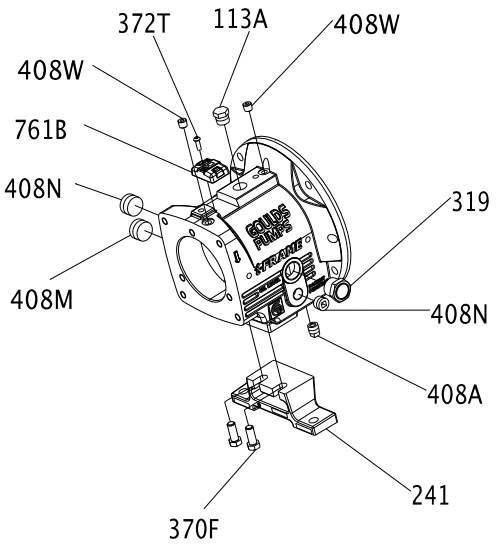

2. Install the outboard bearing (112A) on the shaft (122).
   The regreaseable bearing has a single shield. The outboard bearing is installed with the shield toward the impeller.
   a) Inspect the shaft (122) to ensure that it is clean, dimensionally correct, and is free of nicks and burrs.
   b) Lightly coat the bearing seating with a thin film of oil.
   c) Remove the bearing (112) from its packaging.
   d) Wipe the preservative from the bearing (112) bore and outer diameter.

e) Use an induction heater with a demagnetizing cycle to heat the bearing (112) to an inner ring temperature of 230 °F (110 °C).
f) Position the bearing (112) on the shaft (122) against the shoulder and snug the locknut (136) against the bearing until it is cool.
The locknut prevents the bearing from moving away from the shaft shoulder as it cools.
g) Remove the bearing locknut (136) after the bearing (112) cools.

3. Put the lockwasher (382) onto the shaft (122).
4. Thread the locknut (136) onto the shaft (122) and tighten it until it is snug.
5. Bend the tangs of the lockwasher into the slots of the locknut.
6. Put the bearing-retaining ring (361A) onto the shaft (122).
Make sure that the flat side of the ring is towards the bearing.
7. Coat the inner surfaces of the bearings with lubricant.
8. Put the inboard bearing (168) onto the shaft (122).
The regreasable bearing has a single shield. Make sure that the bearing is installed with the shield away from the impeller.

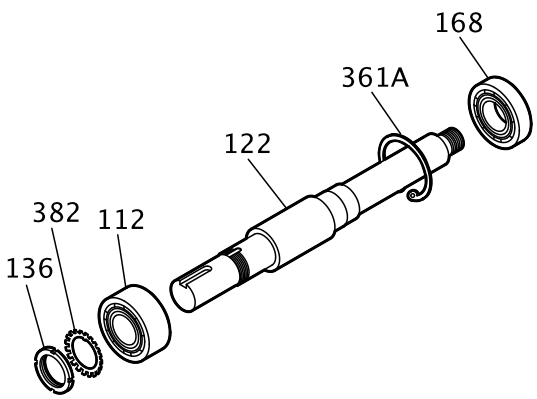

9. Prepare the shaft for assembly as follows (see the illustration):
a) Install a new O-ring (496).
b) Coat the outside of the outboard bearing (112A) with oil.
c) Coat the bore of the bearing housing (134) with oil.
d) Put the bearing housing (134) onto the shaft.
Do not use force.
e) Insert the bearing-retaining ring (361A) into the bore groove of the bearing housing (134).

NOTICE:
Ensure that the space between the ends of the retaining ring are located in the oil-return groove. Failure to do so may result in oil-flow obstruction.

Make sure that the shaft rotates freely.

f) Install the outboard labyrinth oil-seal (332A) into the bearing housing (134).
Place the drain slots of the oil seal at the bottom position (6 o'clock).
Make sure that the edges of the keyway are free from burrs. To protect the O-ring, cover the keyway lengthwise with a piece of electrical tape before you install the oil seal.

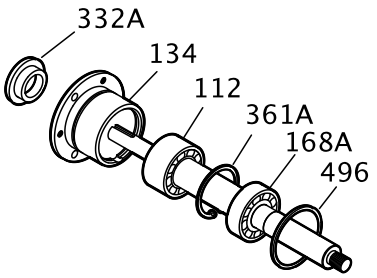

10. Install the shaft assembly into the bearing frame as follows (see the illustration):
    a) Coat the outside of the bearing housing (134) with oil.
    b) Coat all the internal surfaces of the bearing frame (228) with oil.
    c) Install the shaft assembly into the bearing frame (228).
    Make sure that the shaft rotates freely.
    d) Install the clamp bolts (370C) in the bearing housing (134) and tighten by hand.
    e) Install the jack bolts (370D) with the locknuts (423) in the bearing housing (134) and tighten by hand.

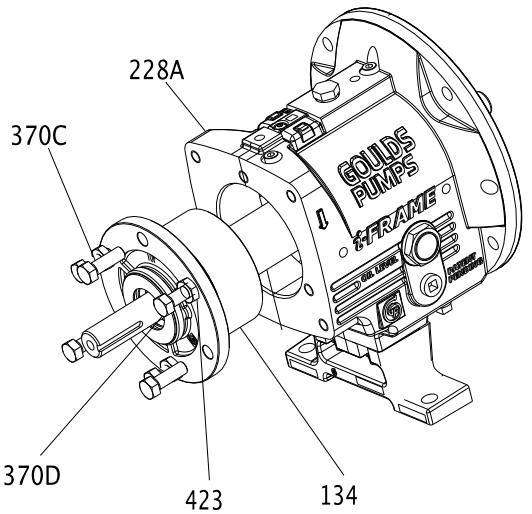

Assemble the rotating element and the bearing frame (STi and MTi with duplex bearings)

CAUTION:
- Wear insulated gloves when you use a bearing heater. Bearings get hot and can cause physical injury.
- Use care when you handle the shaft because it can be heavy. Failure to do so could result in personal injury.

NOTICE:
Make sure that the pipe threads are clean, and that you apply thread sealant to the plugs and fittings. Failure to do so may result in equipment damage or decreased performance.

NOTICE:
Use an induction heater that heats as well as demagnetizes the bearings when you install bearings. Failure to do so may result in decreased performance.

1. Prepare the bearing frame (228) as follows (see the illustration):
   a) Install the oil-fill plug (113A).
   b) Install the oil-drain plug (408A).
   c) Install the sight glass (319).
   d) Install the sight oiler plug (408J).
   e) Install the plug for the oil-cooler inlet (408L).
   f) Install the plug for the oil-cooler outlet (408M).
   g) Install four oil-mist connection plugs (408H).
      Or: Install two grease fittings (193) and two grease-relief plugs (113).
   h) Attach the bearing-frame foot (241) and fasten the bolts (370F) by hand.

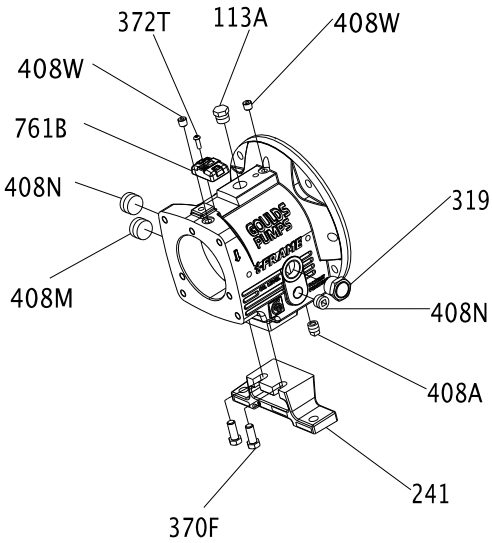

2. Install the outboard bearings (112A) on the shaft (122).
   The regreasable bearing has a single shield. Make sure that the bearing is installed with the shield away from the impeller.
   The duplex bearings are mounted back-to-back. Make sure that the orientation of the bearings are correct.
   a) Inspect the shaft (122) to ensure that it is clean, dimensionally correct, and is free of nicks and burrs.

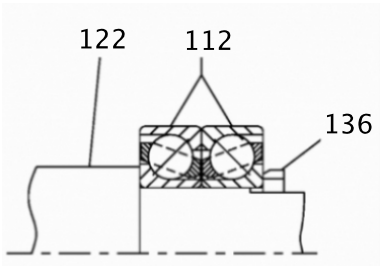

b) Lightly coat the bearing seating with a thin film of oil.
c) Remove the bearings (112) from their packaging.
d) Wipe the preservative from the bearing (112) bore and outer diameter.
e) Use an induction heater with a demagnetizing cycle to heat both bearings (112) to an inner ring temperature of 230 °F (110 °C).
f) Place both bearings (112) on the shaft (122) with the large outer races together (back-to-back).
g) Position the bearings (112) on the shaft (122) against the shoulder and snug the locknut (136) against the bearings until they are cool.
The locknut prevents the bearings from moving away from the shaft shoulder as they cool. Rotate the outer bearing rings relative to each other as they are placed on the shaft to assure good alignment.
h) Remove the bearing locknut (136) after the bearings (112) are cool.

3. Put the lockwasher (382) onto the shaft (122).
4. Thread the locknut (136) onto the shaft (122) and tighten it until it is snug.
5. Bend the tangs of the lockwasher into the slots of the locknut.
6. Place the bearing-clamp ring (253B) onto the shaft (122).
Make sure that the orientation of the bearing-clamp ring is correct.
7. Coat the inner surfaces of the bearings with lubricant.
8. Put the inboard bearing (168) onto the shaft (122).

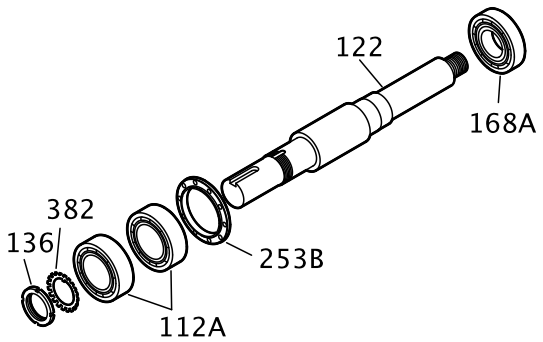

9. Install the bearing housing as follows (see the illustration):
a) Coat the outside of the outboard bearing (112A) with oil.
b) Coat the bore of the bearing housing (134) with oil.
c) Put the bearing housing (134) onto the shaft.
Do not use force.

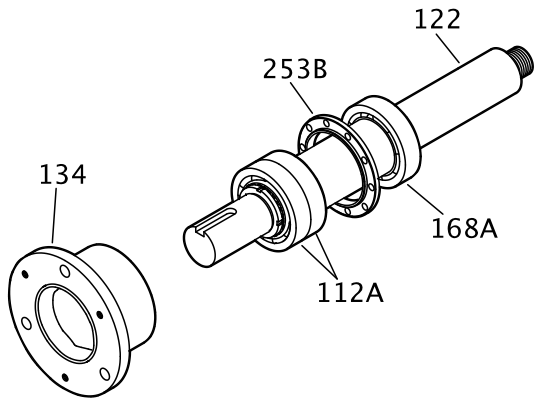

10. Prepare the shaft for assembly as follows (see the illustration):
a) Place the bearing-clamp ring (253B) onto the shaft (122).

b) Fasten the clamp-ring bolts (236A) crosswise.
See the specified torque values.
Make sure that the shaft rotates freely.
c) Install a new O-ring (496).
d) Install the outboard labyrinth oil-seal (332A) into the bearing housing (134).
Place the drain slots of the oil seal at the bottom position (6 o'clock).
Make sure that the edges of the keyway are free from burrs. To protect the O-ring, cover the keyway lengthwise with a piece of electrical tape before you install the oil seal.

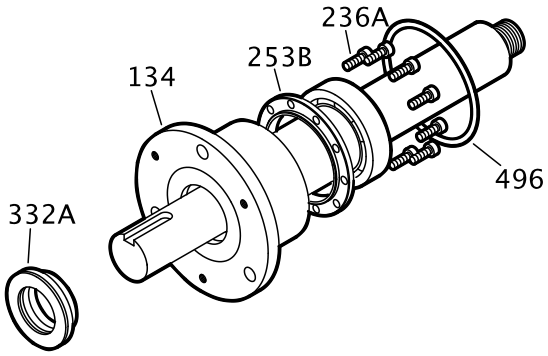

11. Install the shaft assembly into the bearing frame as follows (see the illustration):
    a) Coat the outside of the bearing housing (134) with oil.
    b) Coat all the internal surfaces of the bearing frame (228) with oil.
    c) Install the shaft assembly into the bearing frame (228).
    Make sure that the shaft rotates freely.
    d) Install the clamp bolts (370C) in the bearing housing (134) and tighten by hand.
    e) Install the jack bolts (370D) with the locknuts (423) in the bearing housing (134) and tighten by hand.

Assemble the rotating element and the bearing frame (LTi)

CAUTION:
Wear insulated gloves when you use a bearing heater. Bearings get hot and can cause physical injury.

NOTICE:
Make sure that the pipe threads are clean, and that you apply thread sealant to the plugs and fittings. Failure to do so may result in equipment damage or decreased performance.

NOTICE:
Use an induction heater that heats as well as demagnetizes the bearings when you install bearings. Failure to do so may result in decreased performance.

1. Prepare the bearing frame (228) as follows (see the illustration):
    a) Install the oil-fill plug (113A).
    b) Install the oil-drain plug (408A).
    c) Install the sight glass (319).
    d) Install the sight oiler plug (408J).
    e) Install the plug for the oil-cooler inlet (408L).
    f) Install the plug for the oil-cooler outlet (408M).

g) Install four oil-mist connection plugs (408H).
Or: Install two grease fittings (193) and two grease-relief plugs (113).

h) Attach the bearing-frame foot (241) and fasten the bolts (370F) by hand.

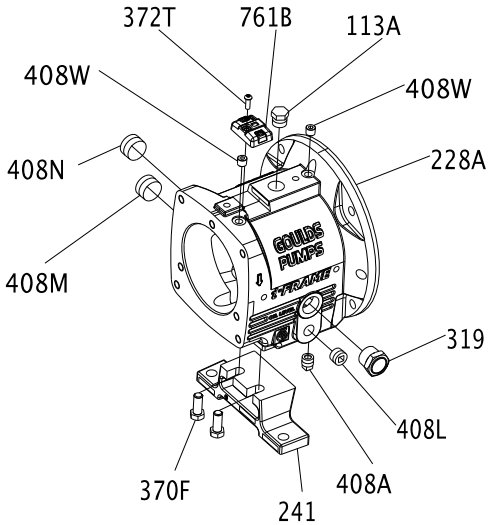

2. Install the oil flinger (248A) onto the shaft (122).

NOTICE:
The oil flinger is press fitted onto the shaft. Use a properly sized driver. Failure to do so may result in damage to the oil flinger.

---

3. Place the bearing-clamp ring (253B) onto the shaft (122).
Make sure that the orientation of the bearing-clamp ring is correct.
4. Install outboard bearings (112A) on shaft (122).
The regreasable bearing has a single shield. Make sure that the bearing is installed with the shield away from the impeller.
The duplex bearings are mounted back-to-back. Make sure that the orientation of the bearings are correct.
   a) Inspect the shaft (122) to ensure that it is clean, dimensionally correct, and is free of nicks and burrs.

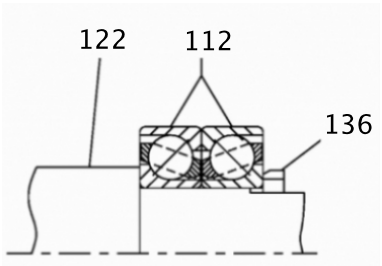

   b) Lightly coat the bearing seating with a thin film of oil.
   c) Remove the bearings (112) from their packaging.
   d) Wipe the preservative from the bearing (112) bore and outer diameter.
   e) Use an induction heater with a demagnetizing cycle to heat both bearings (112) to an inner ring temperature of 230 °F (110 °C).
   f) Place both bearings (112) on the shaft (122) with the large outer races together (back-to-back).

g) Position the bearings (112) on the shaft (122) against the shoulder and snug the locknut (136) against the bearings until they are cool.
The locknut prevents the bearings from moving away from the shaft shoulder as they cool. Rotate the outer bearing rings relative to each other as they are placed on the shaft to assure good alignment.

h) Remove the bearing locknut (136) after the bearings (112) are cool.

5. Put the lockwasher (382) onto the shaft (122).
6. Thread the locknut (136) onto the shaft (122) and tighten it until it is snug.
7. Bend the tangs of the lockwasher into the slots of the locknut.
8. Coat the inner surfaces of the bearings with lubricant.
9. Put the inboard bearing (168) onto the shaft (122).

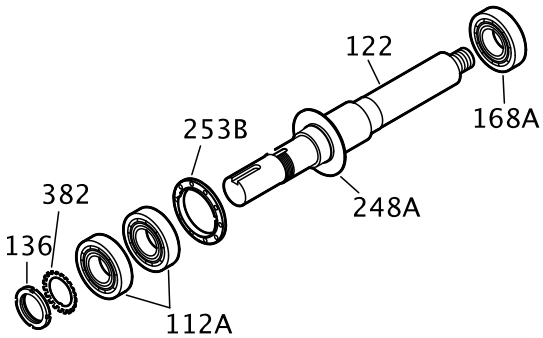

10. Install the bearing housing as follows (see the illustration):
    a) Coat the outside of the outboard bearing (112A) with oil.
    b) Coat the bore of the bearing housing (134) with oil.
    c) Put the bearing housing (134) onto the shaft.
    Do not use force.

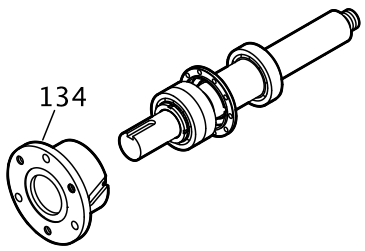

11. Prepare the shaft for assembly as follows (see the illustration):
    a) Fasten the clamp-ring bolts (236A) crosswise.
    See the specified torque values.
    Make sure that the shaft rotates freely.
    b) Install a new O-ring (496).

c) Install the outboard labyrinth oil-seal (332A) into the bearing housing (134).
Place the drain slots of the oil seal at the bottom position (6 o'clock).
Make sure that the edges of the keyway are free from burrs. To protect the O-ring, cover the keyway lengthwise with a piece of electrical tape before you install the oil seal.

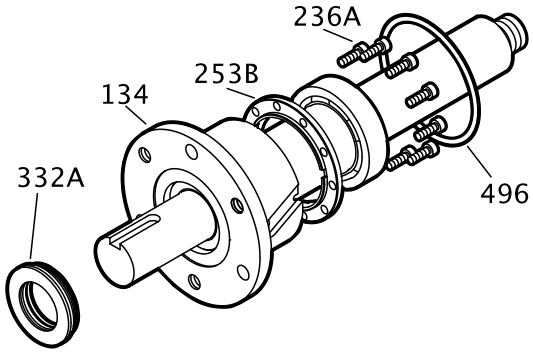

12. Install the shaft assembly into the bearing frame as follows (see the illustration):
    a) Coat the outside of the bearing housing (134) with oil.
    b) Coat all the internal surfaces of the bearing frame (228) with oil.
    c) Install the shaft assembly into the bearing frame (228).
    Make sure that the shaft rotates freely.
    d) Install the clamp bolts (370C) in the bearing housing (134) and tighten by hand.
    e) Install the jack bolts (370D) with the locknuts (423) in the bearing housing (134) and tighten by hand.

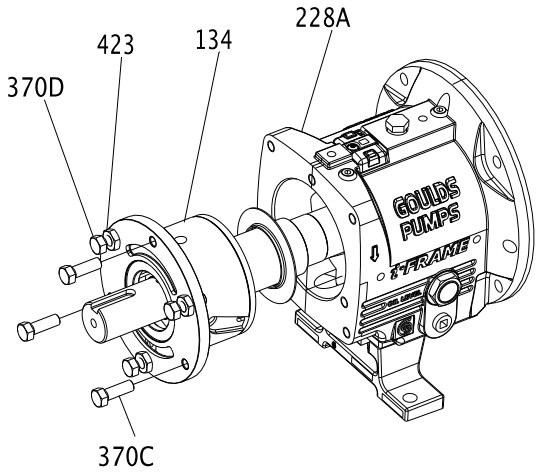

Assemble the rotating element and the bearing frame (XLT-i and i17)

CAUTION:
- Wear insulated gloves when you use a bearing heater. Bearings get hot and can cause physical injury.
- Use care when you handle the shaft because it can be heavy. Failure to do so could result in personal injury.

NOTICE:
Make sure that the pipe threads are clean, and that you apply thread sealant to the plugs and fittings. Failure to do so may result in equipment damage or decreased performance.

NOTICE:
Use an induction heater that heats as well as demagnetizes the bearings when you install bearings. Failure to do so may result in decreased performance.

1. Prepare the bearing frame (228) as follows (see the illustration):
   a) Install the oil-fill plug (113A).
   b) Install the oil-drain plug (408A).
   c) Install the sight glass (319).
   d) Install the sight oiler plug (408J).
   e) Install the plug for the oil-cooler inlet (408L).
   f) Install the plug for the oil-cooler outlet (408M).
   g) Install four oil-mist connection plugs (408H).
   Or: Install two grease fittings (193) and two grease-relief plugs (113).

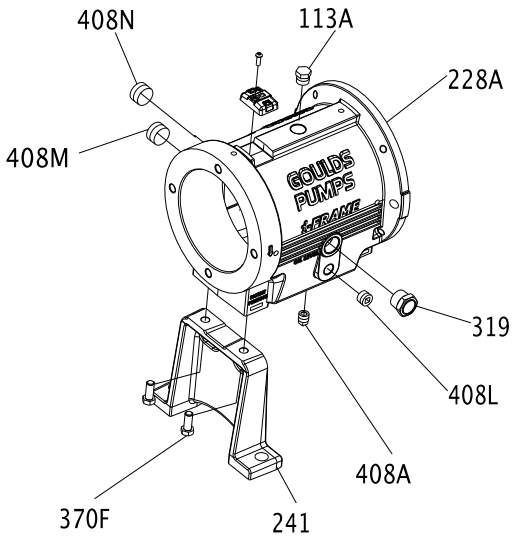

2. Install the outboard bearings (112A) on the shaft (122).
   The regreaseable bearing has a single shield. The outboard bearing is installed with the shield toward the impeller.
   a) Inspect the shaft (122) to ensure that it is clean, dimensionally correct, and is free of nicks and burrs.
   b) Lightly coat the bearing seating with a thin film of oil.
   c) Remove the bearing (112) from its packaging.
   d) Wipe the preservative from the bearing (112) bore and outer diameter.
   e) Use an induction heater with a demagnetizing cycle to heat the bearing (112) to an inner ring temperature of 230 °F (110 °C).
   f) Position the bearing (112) on the shaft (122) against the shoulder and snug the locknut (136) against the bearing until it is cool.
   The locknut prevents the bearing from moving away from the shaft shoulder as it cools.
   g) Remove the bearing locknut (136) after the bearing (112) cools.
3. Put the lockwasher (382) onto the shaft (122).
4. Thread the locknut (136) onto the shaft (122) and tighten it until it is snug.

5. Bend the tangs of the lockwasher into the slots of the locknut.

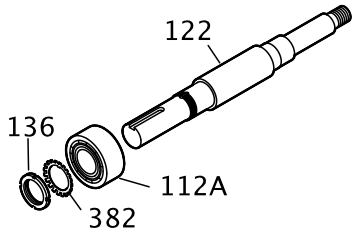

6. Install the bearing housing as follows (see the illustration):
   a) Coat the outside of the outboard bearing (112A) with oil.
   b) Coat the bore of the bearing housing (134) with oil.
   c) Put the bearing housing (134) onto the shaft.
      Do not use force.

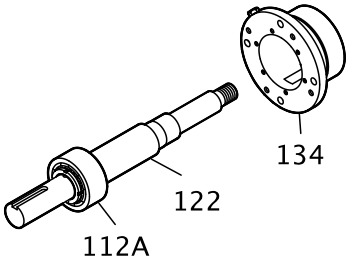

7. Fasten the gasket (360C) and the end cover (109A) with the bolts (371C).
   See the specified torque values.
   Make sure that the shaft rotates freely.

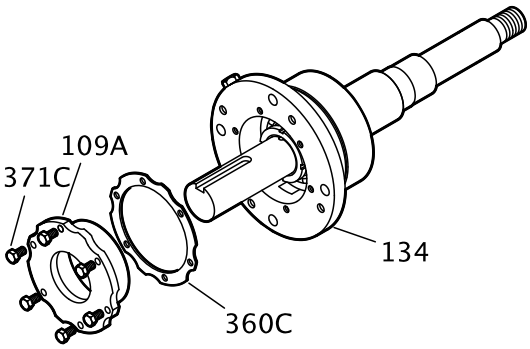

8. Install the inboard bearing as follows (see the illustration):
   a) Coat the inner surfaces of the bearings with lubricant.
   b) Put the inboard bearing (168) onto the shaft (122).
      The regreasable bearing has a single shield. Make sure that the bearing is installed with the shield away from the impeller.

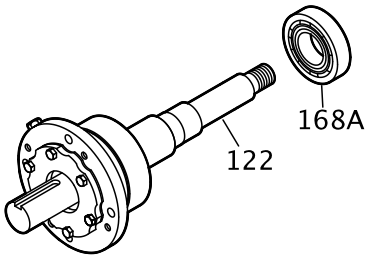

9. Install the remaining parts onto the bearing shaft as follows (see the illustration):
   a) Install a new O-ring (496).
   b) Install the outboard labyrinth oil-seal (332A) into the end cover (109A).
      Place the drain slots of the oil seal at the bottom position (6 o'clock).
      Make sure that the edges of the keyway are free from burrs. To protect the O-ring, cover the keyway lengthwise with a piece of electrical tape before you install the oil seal.

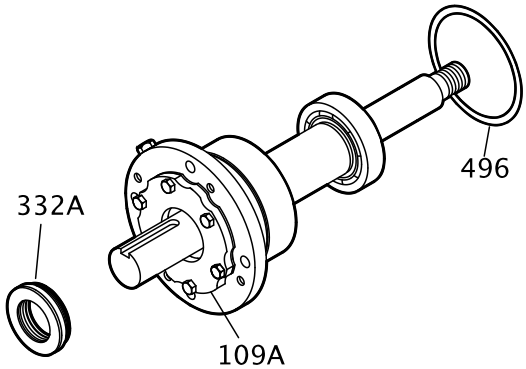

10. Install the shaft assembly into the bearing frame as follows (see the illustration):
    a) Coat the outside of the bearing housing (134) with oil.
    b) Coat all the internal surfaces of the bearing frame (228) with oil.
    c) Install the shaft assembly into the bearing frame (228).
       Make sure that the shaft rotates freely.
    d) Install the clamp bolts (370C) in the bearing housing (134) and tighten by hand.
    e) Install the jack bolts (370D) with the locknuts (423) in the bearing housing (134) and tighten by hand.
    f) Attach the bearing-frame foot (241) and fasten the bolts (370F) by hand.

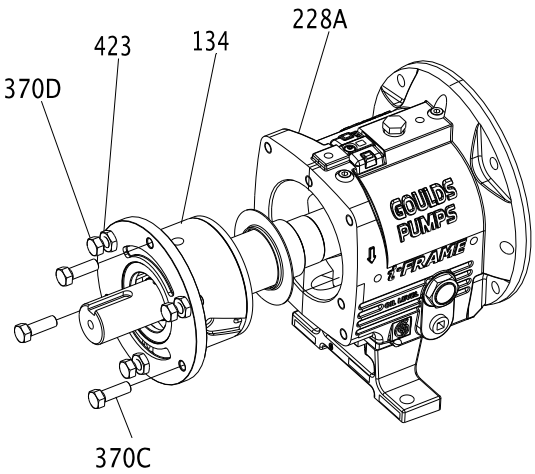

Assemble the rotating element and the bearing frame (XLT-i and i17 with duplex bearings)

CAUTION:
- Wear insulated gloves when you use a bearing heater. Bearings get hot and can cause physical injury.
- Use care when you handle the shaft because it can be heavy. Failure to do so could result in personal injury.

NOTICE:
Make sure that the pipe threads are clean, and that you apply thread sealant to the plugs and fittings. Failure to do so may result in equipment damage or decreased performance.

NOTICE:
Use an induction heater that heats as well as demagnetizes the bearings when you install bearings. Failure to do so may result in decreased performance.

1. Prepare the bearing frame (228) as follows (see the illustration):
   a) Install the oil-fill plug (113A).
   b) Install the oil-drain plug (408A).
   c) Install the sight glass (319).
   d) Install the sight oiler plug (408J).
   e) Install the plug for the oil-cooler inlet (408L).
   f) Install the plug for the oil-cooler outlet (408M).
   g) Install four oil-mist connection plugs (408H).
   Or: Install two grease fittings (193) and two grease-relief plugs (113).

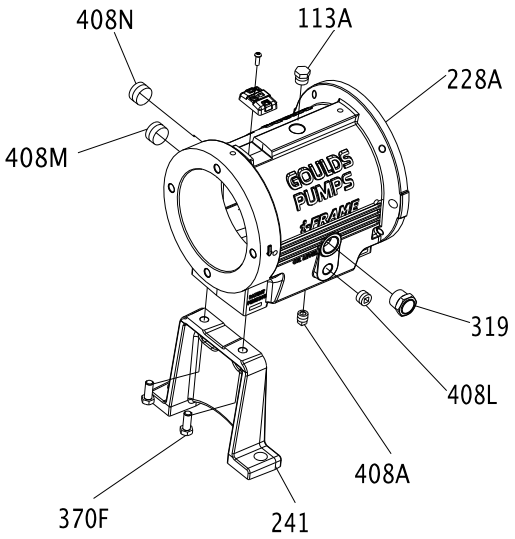

2. Install the outboard bearings (112A) on the shaft (122).
   The regreasable bearing has a single shield. Make sure that the bearing is installed with the shield away from the impeller.
   The duplex bearings are mounted back-to-back. Make sure that the orientation of the bearings are correct.
   a) Inspect the shaft (122) to ensure that it is clean, dimensionally correct, and is free of nicks and burrs.

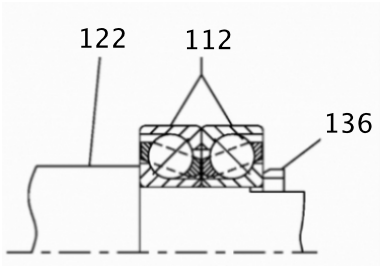

   b) Lightly coat the bearing seating with a thin film of oil.

c) Remove the bearings (112) from their packaging.
d) Wipe the preservative from the bearing (112) bore and outer diameter.
e) Use an induction heater with a demagnetizing cycle to heat both bearings (112) to an inner ring temperature of 230 °F (110 °C).
f) Place both bearings (112) on the shaft (122) with the large outer races together (back-to-back).
g) Position the bearings (112) on the shaft (122) against the shoulder and snug the locknut (136) against the bearings until they are cool.
The locknut prevents the bearings from moving away from the shaft shoulder as they cool. Rotate the outer bearing rings relative to each other as they are placed on the shaft to assure good alignment.
h) Remove the bearing locknut (136) after the bearings (112) are cool.

3. Put the lockwasher (382) onto the shaft (122).
4. Thread the locknut (136) onto the shaft (122) and tighten it until it is snug.
5. Bend the tangs of the lockwasher into the slots of the locknut.

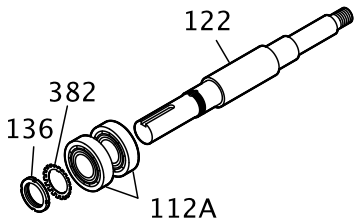

6. Install the bearing housing as follows (see the illustration):
a) Coat the outside of the outboard bearing (112A) with oil.
b) Coat the bore of the bearing housing (134) with oil.
c) Put the bearing housing (134) onto the shaft.
Do not use force.

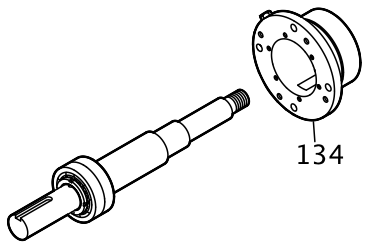

7. Fasten the gasket (360C) and the end cover (109A) with the bolts (371C).
See the specified torque values.
Make sure that the shaft rotates freely.

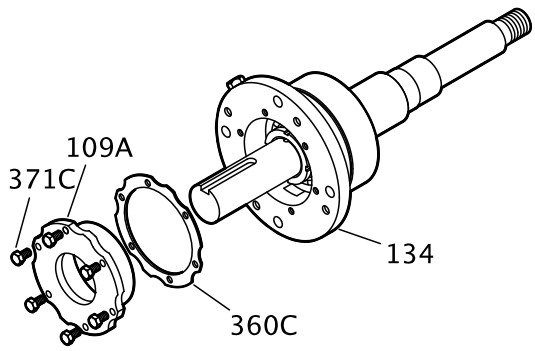

8. Install the inboard bearing as follows (see the illustration):

a) Coat the inner surfaces of the bearings with lubricant.
b) Put the inboard bearing (168) onto the shaft (122).
The regreasable bearing has a single shield. Make sure that the bearing is installed with the shield away from the impeller.

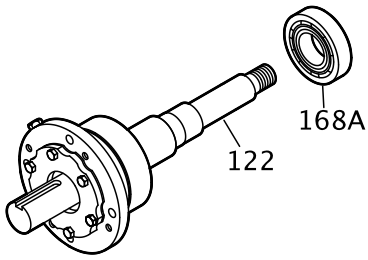

9. Install the remaining parts onto the bearing shaft as follows (see the illustration):
   a) Install a new O-ring (496).
   b) Install the outboard labyrinth oil-seal (332A) into the end cover (109A).
   Place the drain slots of the oil seal at the bottom position (6 o'clock).
   Make sure that the edges of the keyway are free from burrs. To protect the O-ring, cover the keyway lengthwise with a piece of electrical tape before you install the oil seal.

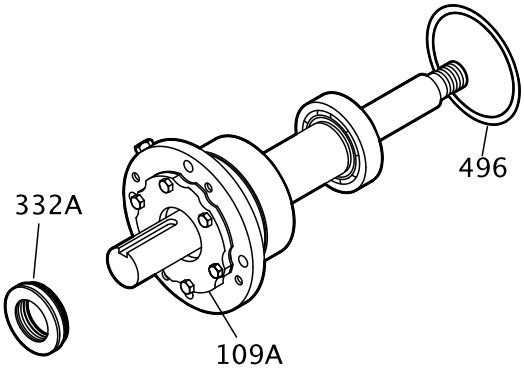

10. Install the shaft assembly into the bearing frame as follows (see the illustration):
   a) Coat the outside of the bearing housing (134) with oil.
   b) Coat all the internal surfaces of the bearing frame (228) with oil.
   c) Install the shaft assembly into the bearing frame (228).
   Make sure that the shaft rotates freely.
   d) Install the clamp bolts (370C) in the bearing housing (134) and tighten by hand.
   e) Install the jack bolts (370D) with the locknuts (423) in the bearing housing (134) and tighten by hand.

f) Attach the bearing-frame foot (241) and fasten the bolts (370F) by hand.

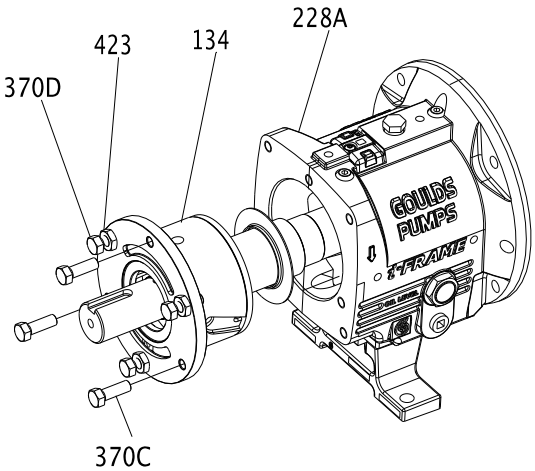

Assemble the frame

1. Support the frame assembly in a horizontal position.
2. Check the shaft-end play by moving the shaft forward and backward by hand, and note any indicator movement.
   If the total indicator reading is greater than the values in this table, then disassemble the shaft and determine the cause.

Table 15: Shaft-end play

Use this table as a reference for shaft-end play values.

Frame	Double row bearing	Duplex bearing
STi inches (millimeters)	0.0011 (0.028) 0.0019 (0.048)	0.0007 (0.018) 0.0010 (0.025)
MTi inches (millimeters)	0.0013 (0.033) 0.0021 (0.053)	0.0009 (0.023) 0.0012 (0.030)
LTi inches (millimeters)	Not applicable	0.0010 (0.025) 0.0015 (0.038)
XLT-i inches (millimeters)	0.0014 (0.036) 0.0023 (0.058)	0.0010 (0.025) 0.0015 (0.038)

Frame	Double row bearing	Duplex bearing

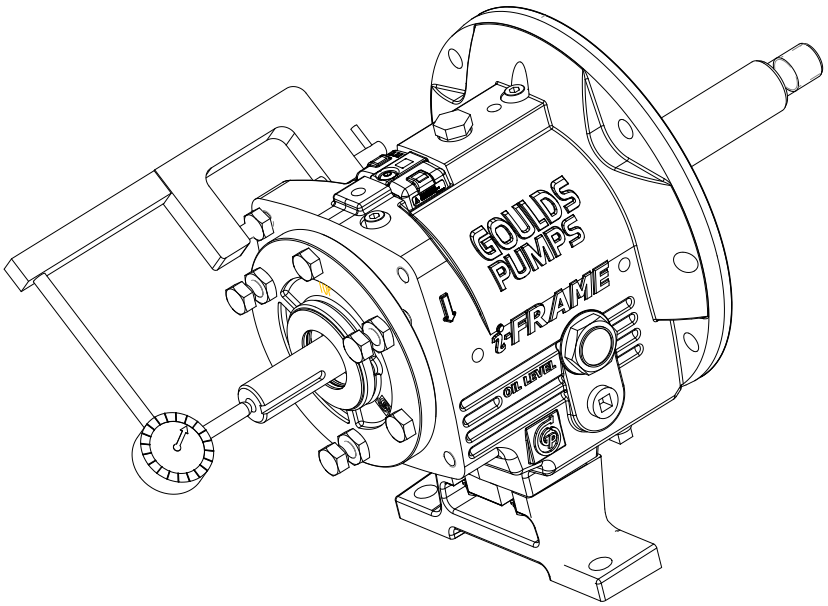

3. Check the shaft-sleeve (126) runout.
   a) Install the shaft sleeve.
   b) Thread the impeller on the shaft until hand tight.
   c) Rotate the shaft 360º.
   d) If the total indicator reading is greater than 0.002 in. (0.051 mm), then disassemble the shaft sleeve and determine the cause.
   e) Remove the impeller and shaft sleeve.

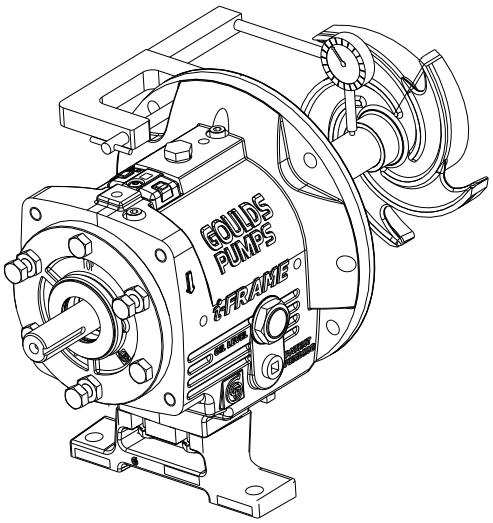

4. Check the frame-face runout by rotating the shaft so that the indicator measures the fit for 360º.
   If the total indicator reading is greater than 0.001 in. (0.025 mm), then disassemble and determine the cause.

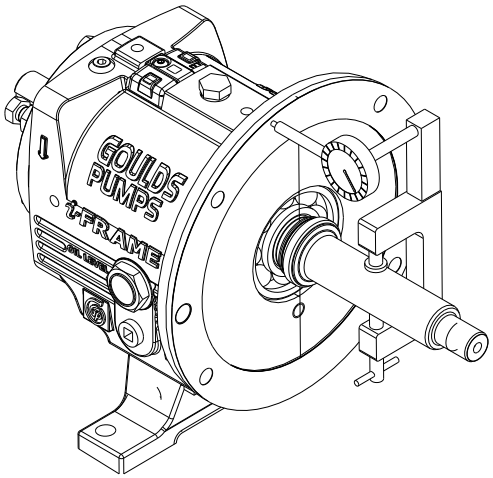

5. Place the manila gasket (360D) on the frame (228), and hold the gasket in place by inserting the dowel pins (469B) in their holes.
   The gasket is designed to fit only one way.
6. Install the frame adapter.
   a) Place the frame adapter (108) onto the frame assembly.
   b) Align the bolt holes and dowel locations on the frame adapter with the bolt holes and dowel locations on the frame.

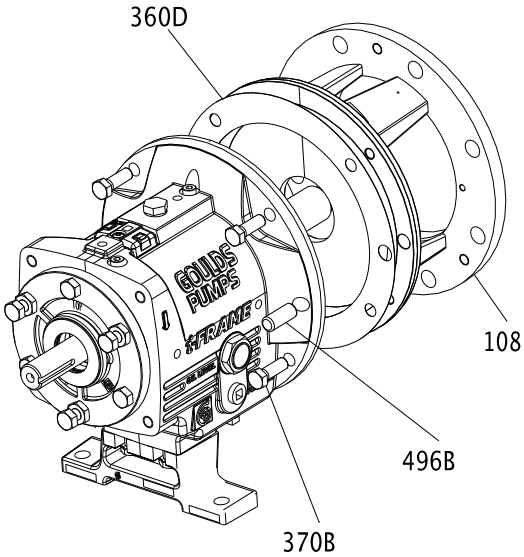

   c) Install the dowel pins (469B) and bolts (370B). Tighten the bolts in a criss-cross pattern according to the specifications in the bolt torque values table.

d) Rotate the shaft 360º to check the adapter fit.
If the total indicator reading is greater than 0.005 in. (0.13 mm), then determine the cause and correct it before you proceed.

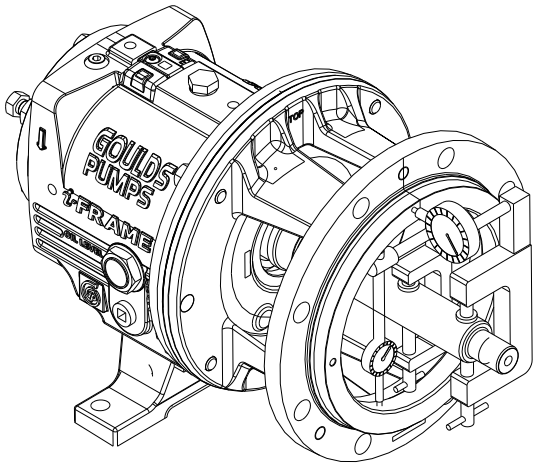

7. Install the labyrinth oil-seal (333A) into the adapter (108) and the bearing frame (228).
The labyrinth oil seal is an O-ring fit.
8. Position the labyrinth oil-seal drain slots at the bottom (6 o'clock) position.
Refer to Assemble the INPRO labyrinth oil-seal for more information on the labyrinth oil-seal installation.

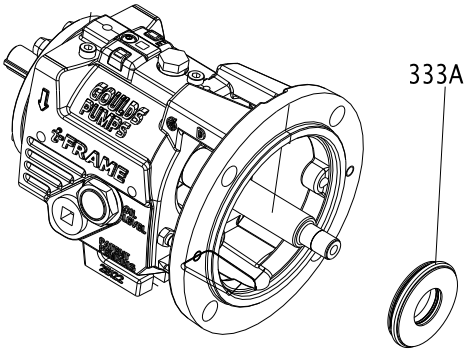

INPRO labyrinth oil seal description

Description

The INPRO VBXX-D Labyrinth Oil Seal consists of the rotor (1), the stator (2), and the VBX Ring (3). The rotor (1) fits over the shaft and is held in place by an elastomeric drive ring (4). The drive ring causes the rotor to turn with the shaft and provides a positive, static seal against the shaft. Since there is no metal-to-metal contact, there are no friction or wear concerns.

NOTICE:
The INPRO VBX is a one-piece design. Do not attempt to separate the rotor from the stator before or during installation. Doing so may result in equipment damage.

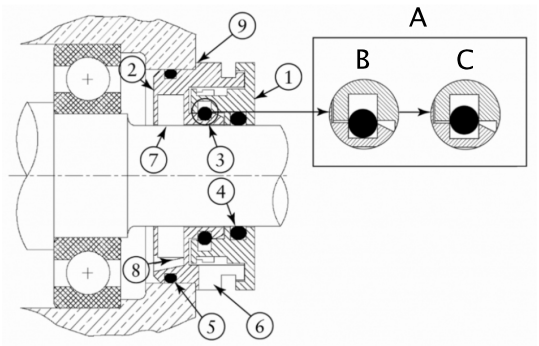

A	"VBX" O-ring action
B	Static
C	Dynamic
1	Rotor
2	Stator
3	"VBX" ring
4	Rotor drive ring
5	Stator gasket
6	Expulsion port
7	D groove
8	Lube return
9	Location shoulder

Assemble the INPRO labyrinth oil seal

1. Wrap electrical tape around the coupling end of the shaft to cover the keyway.

   NOTICE:
   The edges of the keyway can be sharp. Make sure to cover the keyway with tape. Failure to do so may result in cutting the O-ring and damaging the seal.

2. Lightly lube the shaft and the drive ring (4) with lubricant.
   Lubricant helps in the installation process. Be sure that the lubricant is compatible with the O-ring material and the pump-system standards.
3. Use an arbor press to install the outboard INPRO VBXX-D into the bearing cover with the expulsion port (6) at the 6 o'clock position.
   Press the outboard INPRO VBXX-D down to where the stator location ramp (9) starts to avoid angular misalignment. There is a nominal 0.002 in. (0.051 mm) interference fit.
4. Discard any residual material from the stator gasket (5).
5. Complete the applicable step in this table depending on the model of your pump.

Pump model	Action
STi	Press the inboard seal along the shaft into the bearing frame.
All other models	After you install the frame adapter on the bearing frame, press the inboard seal over the shaft and into the adapter.

Assemble the C-face adapter

1. Mount the pump and the motor-coupling hubs if they are not already mounted.
2. Slide the C-face adapter over the pump shaft and mount it against the bearing-frame flange using four bolts.
3. Mount the motor to the C-face adapter using either four or eight motor bolts.

Table 16: Motor-bolt torque values for C-face adapter to frame
This table contains the motor-bolt torque values for assembling the C-face adapter to a frame.

Frame	Lubricated threads	Dry threads
STi	20 ft-lb (27 Nm)	30 ft-lb (41 Nm)
MTi	20 ft-lb (27 Nm)	30 ft-lb (41 Nm)
LTi	20 ft-lb (27 Nm)	30 ft-lb (41 Nm)

Table 17: Motor-bolt torque values for C-face adapter to motor
This table contains the motor-bolt torque values for assembling the C-face adapter to a motor.

Frame	Lubricated threads	Dry threads
143TC-145TC	8 ft-lb (11 Nm)	12 ft-lb (16 Nm)
182TC-286TC	20 ft-lb (27 Nm)	30 ft-lb (41 Nm)
324TC-365TC	39 ft-lb (53 Nm)	59 ft-lb (80 Nm)

Shaft sealing

WARNING:
The mechanical seal used in an Ex-classified environment must be properly certified. Prior to startup, make sure that all areas that could leak pumped fluid to the work environment are closed.

NOTICE:
The mechanical seal must have an appropriate seal-flush system. Otherwise, excess heat generation and seal failure can occur.

Methods for sealing the shaft

These sections discuss the methods that you can use to seal the shaft.

- Seal the shaft with a dynamic seal.
- Seal the shaft with a cartridge-mechanical seal.
- Seal the shaft with a conventional inside-component mechanical seal.
- Seal the shaft with a conventional outside-component mechanical seal.
- Seal the shaft with a packed stuffing box.

Seal the shaft with a dynamic seal

1. Place the backplate (444) with the flat side down on the bench.

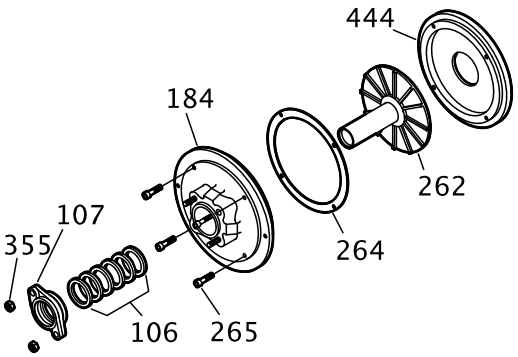

2. Place the repeller (262) in the backplate (444) with the sleeve side up.
3. Place a Teflon gasket (264) on the backplate (444) and align the holes in the gasket with the holes in the backplate.
4. Place a stuffing-box cover (184) on the backplate (444) and align the holes in the gasket with the holes in the backplate.
5. Install four socket-head capscrews (265) and tighten them securely.
6. Install a new sealing element into the gland.

7. Install a gasket (360Q) and gland (107) on the stuffing-box cover (184).
8. Install the nuts (355).
9. Install a dynamic-seal assembly and nuts (370H).

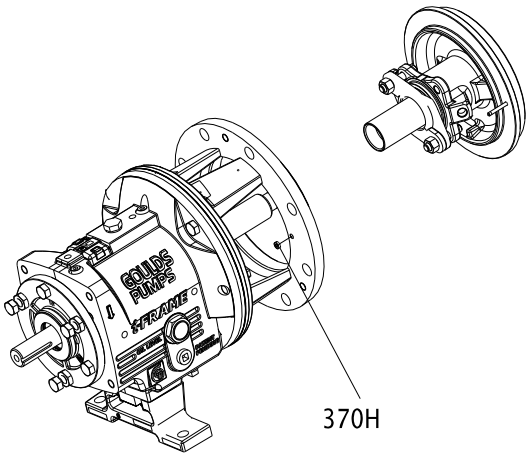

10. Check the stuffing-box-cover runout and rotate the indicator through 360 degrees. An indicator reading that is greater than 0.005 in. (0.013 mm) indicates a problem.

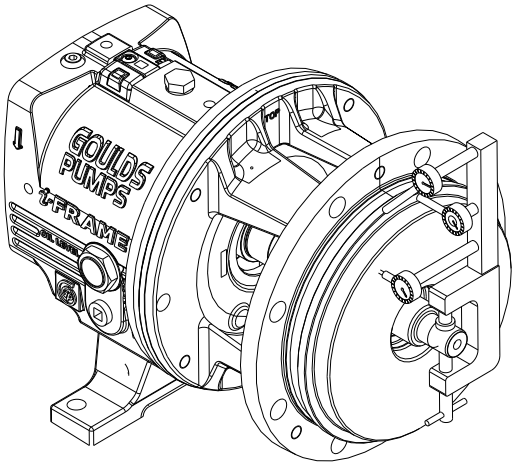

Seal the shaft with a packed stuffing box

WARNING:
Packed stuffing boxes are not allowed in an ATEX-classified environment.

Pumps are shipped without the packing, lantern ring, or split gland installed. These parts are included with the box of fittings shipped with each pump and must be installed before startup.

1. Carefully clean the stuffing-box bore.

2. Twist the packing enough to get it around the shaft.

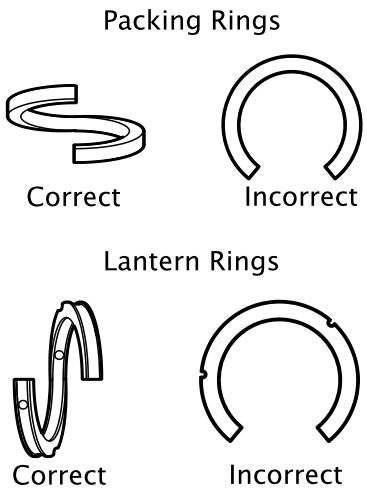

3. Insert the packing and stagger the joints in each ring by 90°.
   Install the stuffing-box parts in this order:
   a) Two packing rings
   b) One lantern ring (two-piece)
   c) Three packing rings

   NOTICE:
   Make sure that the lantern ring is located at the flushing connection to ensure that flush is obtained. Failure to do so may result in decreased performance.

4. Install the gland halves and evenly hand-tighten the nuts.

Seal the shaft with a cartridge mechanical seal

WARNING:
The mechanical seal used in an Ex-classified environment must be properly certified. Prior to startup, make sure that all areas that could leak pumped fluid to the work environment are closed.

NOTICE:
The mechanical seal must have an appropriate seal-flush system. Otherwise, excess heat generation and seal failure can occur.

1. Slide the cartridge seal onto the shaft or sleeve until it contacts the inboard labyrinth oil seal.
2. Assemble the seal chamber.
3. Slide the cartridge seal into the seal chamber and secure using the four studs and nuts.
4. Continue with the pump reassembly.
5. Set the impeller clearance.
   Refer to the Impeller clearance setting topic for more information.
6. Tighten the setscrews in the seal locking ring in order to secure the seal to the shaft.
7. Remove the centering clips from the seal.

Seal the shaft with a conventional inside-component mechanical seal

WARNING:
The mechanical seal used in an Ex-classified environment must be properly certified. Prior to startup, make sure that all areas that could leak pumped fluid to the work environment are closed.

NOTICE:
The mechanical seal must have an appropriate seal-flush system. Otherwise, excess heat generation and seal failure can occur.

1. Assemble the seal chamber:
   a) Install a seal-chamber cover or a backplate (184) and fasten with nuts (370H) with .

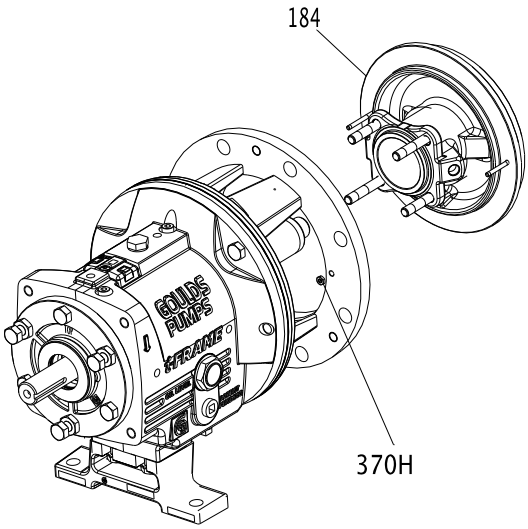

   b) Check the seal-chamber cover runout.

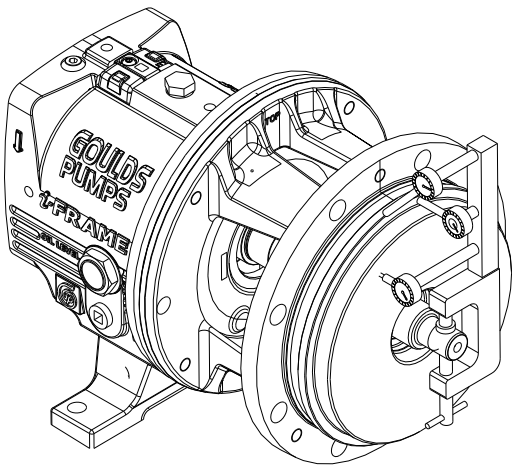

   Rotate the indicator through 360º. If the total indicator reading is greater than 0.005 inches (0.13 mm), determine the cause and correct the issue before you proceed.

c) Install the shaft sleeve (126).

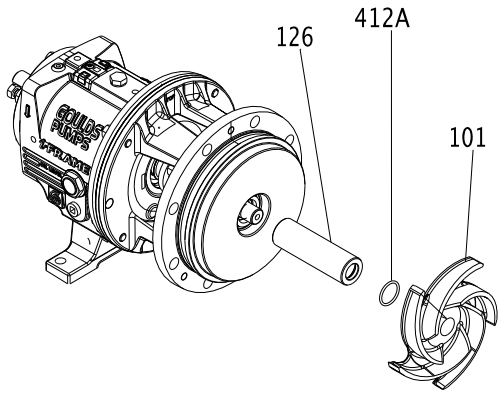

2. Mark the shaft and sleeve at the face of the seal chamber.
3. Continue the complete reassembly of the pump, except for the mechanical seal.
4. Set the impeller clearance.
   Refer to the Impeller Clearance Setting section for more information.
5. Scribe a line on the marked shaft and sleeve at the face of the seal chamber.
6. Remove the casing, the impeller, and the seal chamber.
7. If applicable, slide the gland, with the stationary seat and gland gasket installed, onto the shaft until it contacts the inboard labyrinth oil seal.
8. Install the mechanical-seal rotary unit according to the manufacturer's instructions.
   Use the scribed line and the seal-reference dimension.
9. Reinstall the seal chamber.
10. Slide the gland on the seal-chamber studs and secure them with the gland nuts.
    Tighten the nuts evenly so that the gland is seated on the seal-chamber pilot and is perpendicular to the shaft.
11. Complete the reassembly of the pump.

Seal the shaft with a conventional outside-component mechanical seal

WARNING:
The mechanical seal used in an Ex-classified environment must be properly certified. Prior to startup, make sure that all areas that could leak pumped fluid to the work environment are closed.

NOTICE:
The mechanical seal must have an appropriate seal-flush system. Otherwise, excess heat generation and seal failure can occur.

1. Assemble the seal chamber.

a) Install the seal-chamber cover or backplate (184) and fasten with nuts (370H).

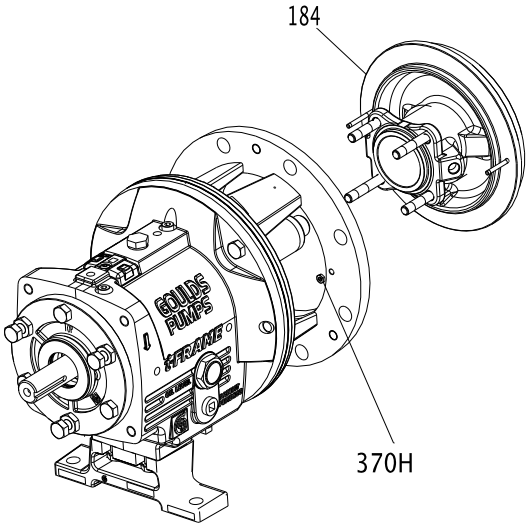

b) Check the seal-chamber cover runout.

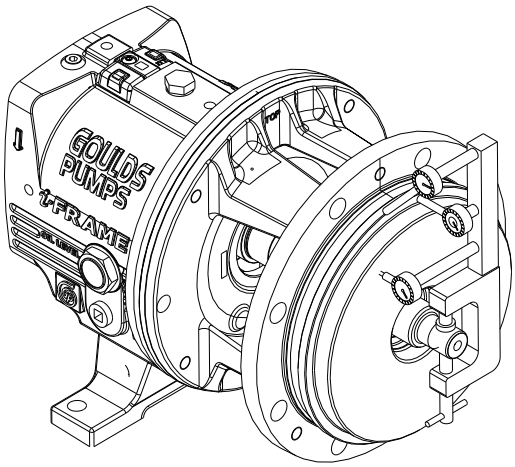

Rotate the indicator through 360 degrees. If the total indicator reading is greater than 0.005 in. (0.13 mm), determine the cause and correct the issue before you proceed.

c) Install the shaft sleeve (126).

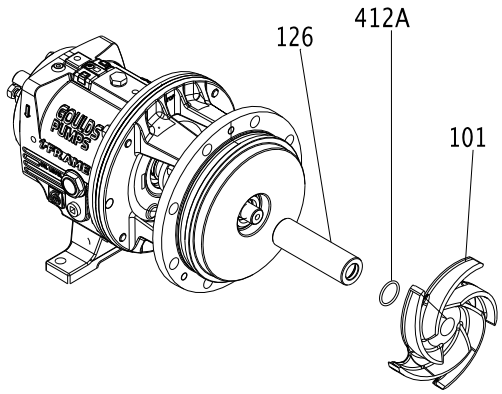

2. Mark the shaft and sleeve at the face of the seal chamber.
3. Continue the complete reassembly of the pump, except for the mechanical seal.
4. Set the impeller clearance.
   Refer to the Impeller clearance setting section for more information.
5. Scribe a line on the marked shaft and sleeve at the face of the seal chamber.
6. Remove the casing, the impeller, and the seal chamber.
7. Install the mechanical-seal rotary unit per the manufacturer's instructions.
   Use the scribed line as the seal-reference dimension. Be sure to secure the rotary unit in place using the set screws in the locking ring.
8. Install the gland, with the stationary seat and gland gaskets installed, on the seal chamber.
9. Reinstall the seal chamber.
10. Complete the reassembly of the pump.

Install the impeller

CAUTION:
Wear heavy work gloves when you handle impellers. The sharp edges can cause physical injury.

1. Install the impeller.

Pump size	Action
STi, MTi, and LTi	Install the impeller (101). Use a new impeller O-ring (412A).
XLT-i and i17	Install the impeller (101) and a Teflon washer (428D) on the plug (458Y). Use a new impeller O-ring (412A).

2. Attach a shaft wrench and a coupling key on the shaft.
   a) When the impeller (101) makes firm contact with the sleeve (126), raise the shaft wrench (counterclockwise, viewed from the impeller end of the shaft) off of the bench and slam it down (clockwise, viewed from the impeller end of shaft).

b) Apply a few sharp raps to tighten the impeller (101).

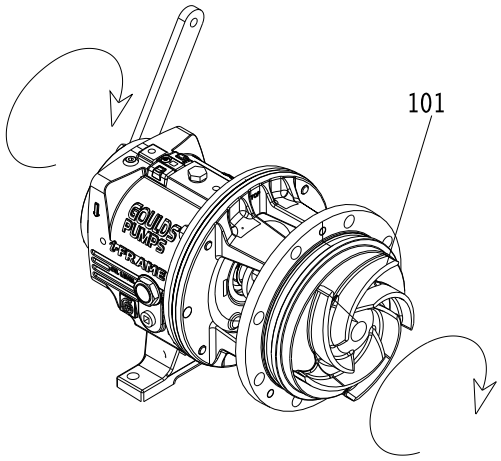

3. Loosen the clamp bolts (370C) and the jack bolts (370D).
4. Measure the gap between the impeller (101) and the seal chamber and stuffing-box cover (184) with a feeler gauge.

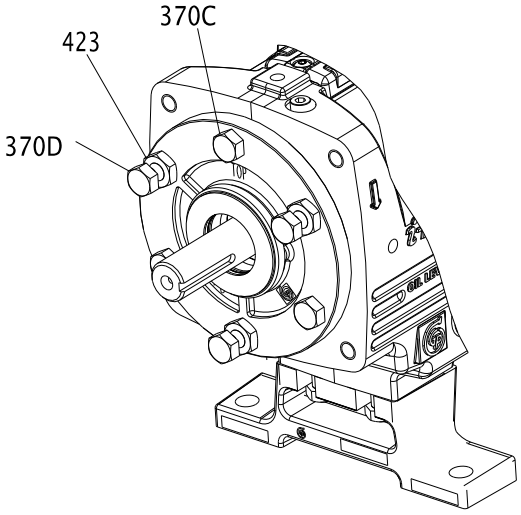

5. When you reach a 0.030 in. (0.76 mm) clearance, tighten the clamp bolts (370C), jack bolts (370D), and lock nuts (423).
   This approximates the impeller position when it is set to 0.015 in. (0.38 mm) from the casing. Perform a final impeller adjustment after you install the impeller into the casing.
6. Check the impeller (101) runout.

Check vane tip to vane tip. If the total indicator reading is greater than 0.005 in. (0.13 mm), determine the cause and correct the issue before you proceed.

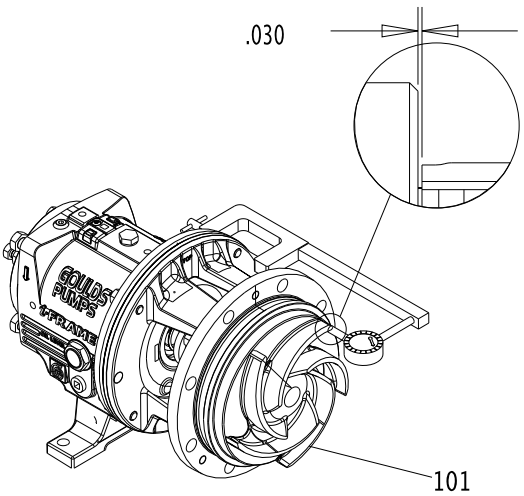

For more information on how to set the impeller clearances, refer to the Impeller-clearance checks and Impeller-clearance setting sections in Commissioning, Startup, Operation, and Shutdown.

Attach the i-ALERT™ Condition Monitor to the pump

CAUTION:
Always wear protective gloves. The pump and condition monitor can be hot.

Tools required:

- 5/32 inch hex wrench

1. Attach the condition monitor (761B) to the bearing frame (228A) using the hex-head screw (372T) provided.

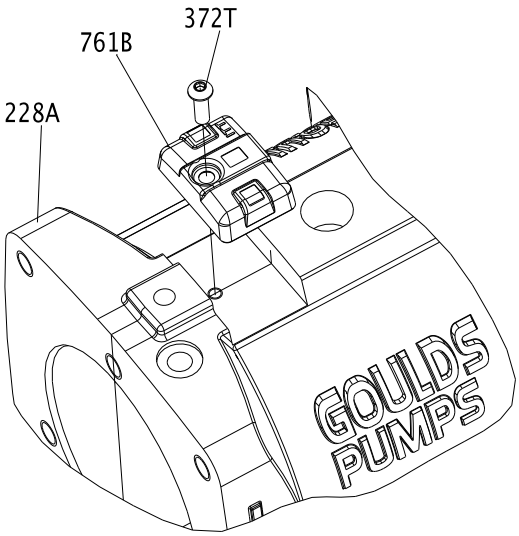

2. Tighten the hex-head screw with a 5/32 inch hex wrench to 6 ft-lbs (8 Nm).

Post-assembly checks

Perform these checks after you assemble the pump, then continue with pump startup:

- Rotate the shaft by hand in order to make sure that it rotates easily and smoothly and that there is no rubbing.
- Open the isolation valves and check the pump for leaks.

Install the back pull-out assembly (except HT 3196)

CAUTION:
Never remove the back pull-out assembly without assistance.

1. Clean the casing fit and install the casing gasket (351) on the seal chamber and stuffing-box cover.
2. Loosen the clamping bolts (370C) and jack bolts (370D) on the bearing housing.

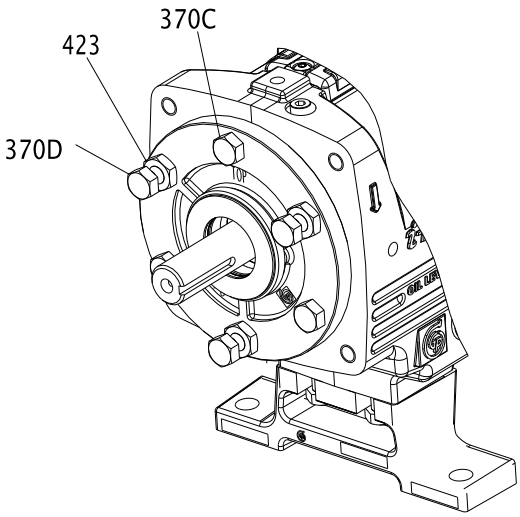

3. Install the back pull-out assembly in the casing.

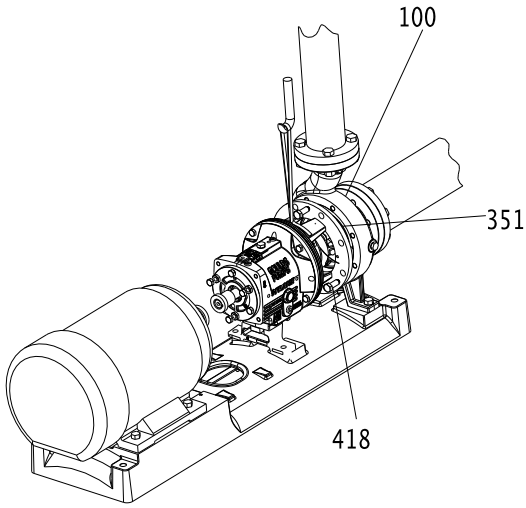

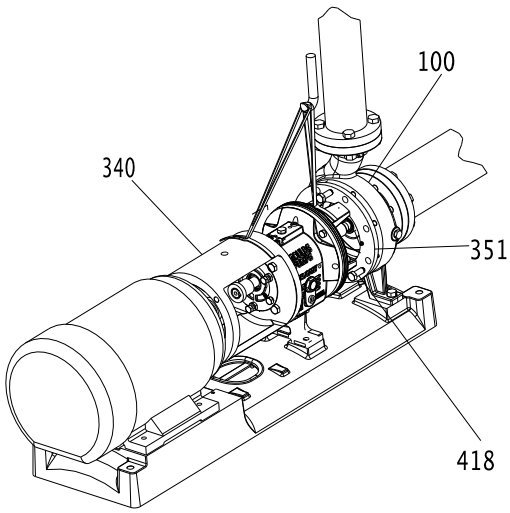

4. Install and then hand-tighten the casing bolts (370).
   Refer to the bolt torque values for information on how to tighten the casing bolts.
5. Install and tighten the casing jackscrews (418).

NOTICE:
Do not overtighten the casing jackscrews. Doing so may result in equipment damage.

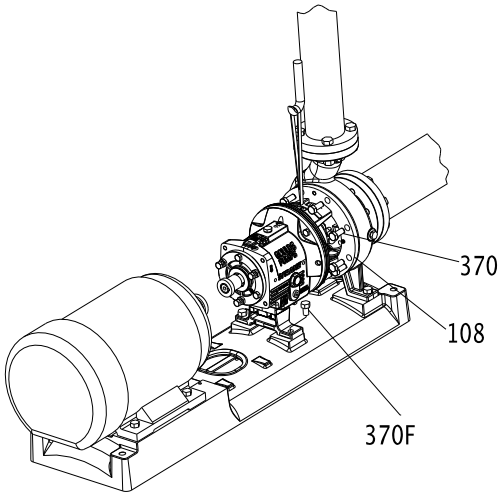

6. Reinstall the shims under the frame foot and tighten the frame foot to the baseplate.
   Make sure that you use the proper shim. Mount a dial indicator in order to measure the distance between the top of the frame and the baseplate. Make sure that the distance does not change as you tighten the frame-foot bolts.
7. Check the total clearance of the impeller in the casing.
   With new parts, an acceptable range is 0.030 in. (0.76 mm) to 0.065 in. (1.65 mm). If the impeller clearance is outside of this range, you either have the incorrect parts, an improper installation, or too much pipe strain. Determine the cause and correct the problem before you proceed.
8. Adjust the impeller clearance.
   Refer to the Impeller clearance setting section for more information.
9. Replace the auxiliary piping.
10. Fill the pump with the proper lubricant. See Lubricating-oil requirements.
11. Reinstall the coupling guard.

See Install the coupling guard for more information.

NOTICE:
Risk of damage to the mechanical seal or shaft sleeve on units supplied with cartridge mechanical seals. Prior to startup, make sure to tighten the set screws in the seal locking ring and remove the centering clips.

Assembly references

Bolt torque values

Table 18: Bolt torque, lb-ft (Nm)
This table provides the bolt torque values.

Location	Frame	3196, CV 3196, LF 3196, 3796		NM 3196		3198	
		Lube	Dry	Lube	Dry	Lube	Dry
Casing bolts (370) or casing nuts (425)	6-in. STi	Refer to the maximum torque values in lb-ft (Nm) for casing bolts table.		27 (36)	40 (53)	N/A	N/A
	8-in. STi			20 (27)	30 (40)	35 (47)	53 (71)
	MTi, LTi			27 (36)	40 (53)	35 (47)	53 (71)
	XLT-i, i17			N/A	N/A	N/A	N/A
Frame-to-adapter bolts	All	20 (27)	30 (40)	20 (27)	30 (40)	20 (27)	30 (40)
Bearing-clamp ring bolts (236A) - duplex bearing only	STi, MTi	10* (1.1)	17* (1.9)	10* (1.1)	17* (1.9)	10* (1.1)	17* (1.9)
	LTi	55* (6.2)	83* (9.4)	55* (6.2)	83* (9.4)	55* (6.2)	83* (9.4)
Bearing end cover bolts (371C)	XLT-i, i17	9 (12)	12 (16)	N/A	N/A	N/A	N/A
Dynamic seal cap-screws (265)	STi, MTi, LTi	55* (6.2)	83* (9.4)	N/A	N/A	N/A	N/A
	XLT-i, i17	9 (12)	12 (16)	N/A	N/A	N/A	N/A
* Values are in lb-in. (Nm)							

Table 19: Maximum torque values in lb-ft (Nm) for casing bolts
This table provides the maximum torque values for casing bolts.

		Models 3196, CV 3196 LF 3196, 3796 with 150 lb (68 kg) casing flanges				Model HT 3196 and all models with 300 lb (136 kg) casing flanges	
		Material specification					
		Ductile iron casing with A307 Grade B casing bolts		Alloy casing with (304SS) F593 Grade 1 or (316SS F593) Grade 2 casing bolts		Ductile iron and alloy casings with A193 grade B7 casing bolts	
Frame	Casing bolt diameter (in.)	Lube	Dry	Lube	Dry	Lube	Dry
8 in. STi	0.50	20 (27)	30 (41)	35 (47)	54 (73)	58 (79)	87 (118)
6 in. STi	0.625	39 (53)	59 (80)	71 (96)	107 (145)	115 (156)	173 (235)
MTi	0.625	39 (53)	59 (80)	71 (96)	107 (145)	115 (156)	173 (235)
LTi	0.625	39 (53)	59 (80)	71 (96)	107 (145)	115 (156)	173 (235)
XLT-i	0.625	39 (53)	59 (80)	71 (96)	107 (145)	115 (156)	173 (235)
i17	7/8	113 (153)	170 (230)	141 (191)	212 (287)	330 (447)	495 (671)

Shaft-end play

Table 20: Shaft-end play
Use this table as a reference for shaft-end play values.

Frame	Double row bearing	Duplex bearing
STi inches (millimeters)	0.0011 (0.028) 0.0019 (0.048)	0.0007 (0.018) 0.0010 (0.025)
MTi inches (millimeters)	0.0013 (0.033) 0.0021 (0.053)	0.0009 (0.023) 0.0012 (0.030)

Frame	Double row bearing	Duplex bearing
LTi inches (millimeters)	Not applicable	0.0010 (0.025) 0.0015 (0.038)
XLT-i inches (millimeters)	0.0014 (0.036) 0.0023 (0.058)	0.0010 (0.025) 0.0015 (0.038)

Bearing types

Table 21: Bearing types

Frame Double row	Inboard bearing Duplex	Outboard bearing	
STi	6207	3306	7306
MTi	6309	3309	7309
LTi	6311	Not applicable	7310
XLT-i, i17	6313	3313	7313

Spare parts

Always state the serial number and indicate the part name and item number from the relevant sectional drawing when you order spare parts. It is imperative for service reliability to have a sufficient stock of readily available spare parts.

- Impeller (101)
- Shaft (122A)
- Shaft sleeve (126)
- Outboard bearing (112A)
- Inboard bearing (168A)
- Casing gasket (351)
- Frame-to-adapter gasket (360D)
- Bearing-housing retaining ring (361A)
- Bearing lockwasher (382)
- Bearing locknut (136)
- Impeller O-ring (412A)
- Bearing-housing O-ring (496)
- Outboard labyrinth-seal rotary O-ring (497F)
- Outboard labyrinth-seal stationary O-ring (497G)
- Inboard labyrinth-seal rotary O-ring (497H)
- Inboard labyrinth-seal stationary O-ring (497J)
- Lantern ring half (105) (packed stuffing box)
- Stuffing box packing (106) (packed stuffing box)
- Packing gland (107) (packed stuffing box)
- Impeller gasket (428D) (XLT-i and i17 only)

Interchangeability drawings

3196 interchangeability

Table 22: 3196 interchangeability drawing

Description	Shaft and Bearing Frame Assembly	Adapter	Seal Chamber	Impeller	Casing	Size
Model 3196 STi 1–3/8 in. Shaft Dia. Max BHP-40 HP	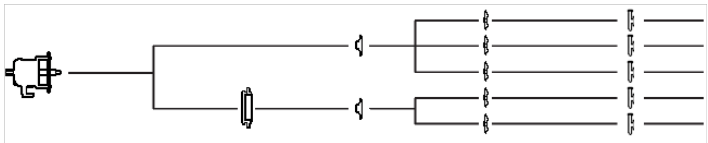					1x1.5-6 A 1.5x3-6 A 2x3-6 AC 1X1.5-8 A 1.5X3-8 A

Description	Shaft and Bearing Frame Assembly	Adapter	Seal Chamber	Impeller	Casing	Size
Model 3196 MTi 1–3/4 in. Shaft Dia. Max BHP-122 HP	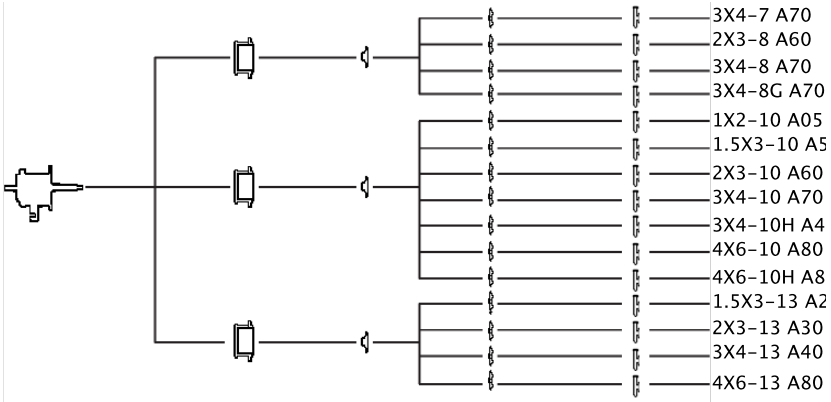					3X4-7 A70 2X3-8 A60 3X4-8 A70 3X4-8G A70 1X2-10 A05 1.5X3-10 A5 2X3-10 A60 3X4-10 A70 3X4-10H A4 4X6-10 A80 4X6-10H A8 1.5X3-13 A2 2X3-13 A30 3X4-13 A40 4X6-13 A80
Model 3196 LTi 2–1/8 in. Shaft Dia. Max BHP-200 HP	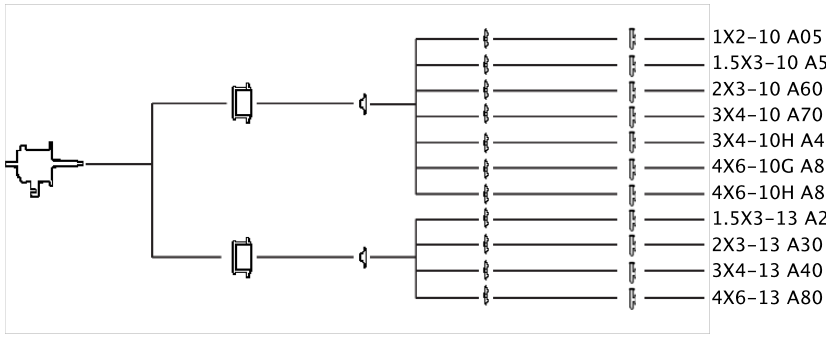					1X2-10 A05 1.5X3-10 A5 2X3-10 A60 3X4-10 A70 3X4-10H A4 4X6-10G A8 4X6-10H A8 1.5X3-13 A2 2X3-13 A30 3X4-13 A40 4X6-13 A80
Model 3196 XLT-i 2–1/2 in. Shaft Dia. Max BHP-250 HP 17 in. XLT-i has 2–3/4 in. Shaft Dia. Max BHP-350 HP	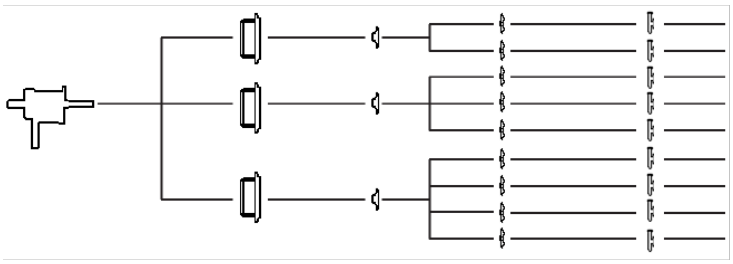					6X8-13 A90 8X10-13 A100 6X8-15 A110 8X10-15 A120 8X10-15G A12 8X10-15H A12 4X6-17 A105 6X8-17 A110 8X10-17 A120

Lubrication conversion

Frame lubrication conversion

NOTICE:

- Never mix greases of different consistencies (NLGI 1 or 3 with NLGI 2) or with different thickeners. For example, never mix a lithium-based grease with a polyurea-based grease. Doing so may result in decreased performance.
- Remove the bearings and old grease if you need to change the grease type or consistency. Failure to do so may result in equipment damage or decreased performance.

Use a grease that is suitable for high temperatures when you have frame pumpage temperatures greater than 350°F (177°C). Ensure that mineral-oil greases have oxidation stabilizers and a consistency of NLGI 3.

Table 23: Lubricating-grease requirements

Most pumps use Sunoco 2EP grease. High temperature units with a pumpage temperature greater than 350° F (177°C) use Mobil SCH32.

This table shows which brand of grease to use when lubricating the pump.

	Pumpage temperature less than 350°F (177°C)	Pumpage temperature greater than 350°F (177°C)
NGLI consistency	2	3
Mobil	Mobilux EP2	SCH32
Exxon	Unirex N2	Unirex N3
Sunoco	Mutipurpose 2EP	N/A
SKF	LGMT 2	LGMT 3

Convert from greased-for-life or regreaseable to oil-lubricated bearings

1. Remove the plug from the oil-return slot in the frame located under the radial bearing. Use this table as a guide.

Pump model	Action
STi	Remove the epoxy from the return slot.
MTi, LTi, XLT-i, and i-17	Remove the set screw installed in the oil-return hole.

2. Remove the plug from the oil-return hole in the bearing housing (134).
3. Replace both bearings with unshielded, oil-lubricated bearings.

Table 24: Bearing types

Frame Double row	Inboard bearing Duplex	Outboard bearing	
STi	6207	3306	7306
MTi	6309	3309	7309
LTi	6311	Not applicable	7310
XLT-i, i17	6313	3313	7313

4. Remove the grease fittings (193) to prevent accidental greasing.
   Two plugs (408H) are required to replace the two grease fittings.

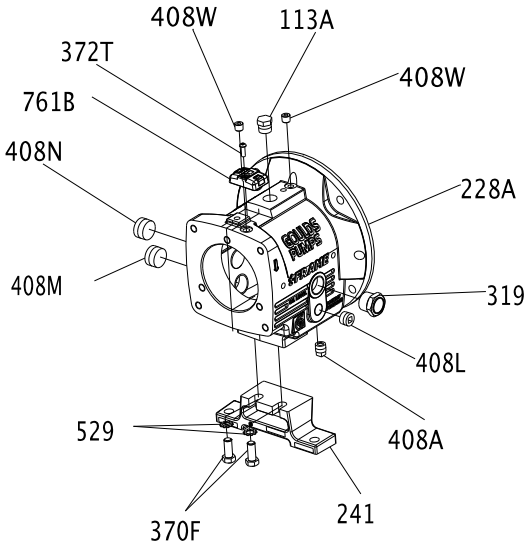

Item Number	Size	Description	Quantity
113	1/4"-18 NPT	External hex/square head pipe plug	2
113A	1/2"-14 NPT	External hex/square head pipe plug	1
193	1/4"-18 NPT	Grease fitting	2
228	- - - -	Bearing frame	1
241	- - - -	Frame foot	1
370F	1/2"	Hex cap screw	2
408A	3/8"-18 NPT	External square head pipe plug (magnetic)	1

Item Number	Size	Description	Quantity
408J	1/4"-18 NPT	External hex/square head pipe plug	1
408L	1/2"-14 NPT	Square countersunk headless pipe plug	1
408M	1" 11-1/2" NPT	Square countersunk headless pipe plug	1
529	1/2"	Light helical spring lock washer	2

Conversion from flood-oil to pure-oil mist

Consult your local ITT representative for further information on this topic.

Convert from flood oil to regreaseable

Consult your local ITT representative for further information on this topic.

Troubleshooting

Operation troubleshooting

Symptom	Cause	Remedy
The pump is not delivering liquid.	The pump is not primed.	Re-prime the pump and check that the pump and suction line are full of liquid.
	The suction line is clogged.	Remove the obstructions.
	The impeller is clogged.	Back-flush the pump in order to clean the impeller.
	The shaft is rotating in the wrong direction.	Change the rotation. The rotation must match the arrow on the bearing housing or pump casing.
	The foot valve or suction pipe opening is not submerged enough.	Consult an ITT representative for the proper submersion depth. Use a baffle in order to eliminate vortices.
	The suction lift is too high.	Shorten the suction pipe.
The pump is not producing the rated flow or head.	The gasket or O-ring has an air leak.	Replace the gasket or O-ring.
	The stuffing box has an air leak.	Replace or readjust the mechanical seal.
	The impeller is partly clogged.	Back-flush the pump in order to clean the impeller.
	The clearance between the impeller and the pump casing is excessive.	Adjust the impeller clearance.
	The suction head is not sufficient.	Make sure that the suction-line shutoff valve is fully open and that the line is unobstructed.
	The impeller is worn or broken.	Inspect and replace the impeller if necessary.
The pump starts and then stops pumping.	The pump is not primed.	Re-prime the pump and check that the pump and suction line are full of liquid.
	The suction line has air or vapor pockets.	Rearrange the piping in order to eliminate air pockets.
	The suction line has an air leak.	Repair the leak.
The bearings are running hot.	The pump and driver are not aligned properly.	Realign the pump and driver.
	There is not sufficient lubrication.	Check the lubricant for suitability and level.
	The lubrication was not cooled properly.	Check the cooling system.
The pump is noisy or vibrates.	The pump and driver are not aligned properly.	Realign the pump and driver.
	The impeller is partly clogged.	Back-flush the pump in order to clean the impeller.
	The impeller or shaft is broken or bent.	Replace the impeller or shaft as necessary.
	The foundation is not rigid.	Tighten the hold-down bolts of the pump and motor. Make sure the baseplate is properly grouted without voids or air pockets.
	The bearings are worn.	Replace the bearings.
	The suction or discharge piping is not anchored or properly supported.	Anchor the suction or discharge piping as necessary according to recommendations in the Hydraulic Institute Standards Manual.
	The pump is cavitating.	Locate and correct the system problem.
The mechanical seal is leaking excessively.	The packing gland is not adjusted properly.	Tighten the gland nuts.
	The stuffing box is not packed properly.	Check the packing and repack the box.
	The mechanical seal parts are worn.	Replace the worn parts.
	The mechanical seal is overheating.	Check the lubrication and cooling lines.
	The shaft sleeve is scored.	Machine or replace the shaft sleeve as necessary.
The motor requires excessive power.	The discharge head has dropped below the rated point and is pumping too much liquid.	Install a throttle valve. If this does not help, then trim the impeller diameter. If this does not help, then contact your ITT representative.
	The liquid is heavier than expected.	Check the specific gravity and viscosity.
	The stuffing-box packing is too tight.	Readjust the packing. If the packing is worn, then replace the packing.
	Rotating parts are rubbing against each other.	Check the parts that are wearing for proper clearances.
	The impeller clearance is too tight.	Adjust the impeller clearance.

Alignment troubleshooting

Symptom	Cause	Remedy
Horizontal (side-to-side) alignment cannot be obtained (angular or parallel).	The driver feet are bolt-bound.	Loosen the pump's hold-down bolts, and slide the pump and driver until you achieve horizontal alignment.
	The baseplate is not leveled properly and is probably twisted.	1. Determine which corners of the base-plate are high or low. 2. Remove or add shims at the appropri-ate corners. 3. Realign the pump and driver.

Assembly troubleshooting

Symptom	Cause	Remedy
There is excessive shaft end play.	The internal clearance of the bearings ex-ceeds the recommended amount.	Replace the bearings with a bearing of the correct type.
	The snap ring is loose in the bearing-housing groove.	Re-seat the snap ring.
There is excessive shaft and sleeve runout.	The sleeve is worn.	Replace the sleeve.
	The shaft is bent.	Replace the shaft.
There is excessive bearing-frame flange runout.	The shaft is bent.	Replace the shaft.
	The flange of the bearing frame is distorted.	Replace the bearing-frame flange.
There is excessive frame-adapter runout.	There is corrosion on the frame adapter.	Replace the frame adapter.
	The adapter-to-frame gasket is not seated properly.	Re-seat the frame adapter and make sure that the adapter-to-frame gasket is seated properly.
There is excessive seal chamber or stuffing-box cover runout.	The seal chamber or the stuffing-box cover is not properly seated in the frame adapter.	Re-seat the seal chamber or stuffing-box cover.
	There is corrosion or wear on the seal chamber or stuffing-box cover.	Replace the seal chamber or stuffing-box cover.
There is excessive vane-tip runout of the impeller.	The vane is bent.	Replace the impeller.

i-ALERT™ Condition Monitor troubleshooting

Symptom	Cause	Remedy
There are no green or red flashing LEDs.	The battery is dead.	Replace the condition monitor.
	The unit is deactivated.	Activate the condition monitor.
	The unit is malfunctioning.	Consult your ITT representative for a warranty replacement.
The red LEDs are flashing, but the temperature and vibration are at acceptable levels.	The baseline is bad.	Check the temperature and vi-bration levels and reset the con-dition monitor.
	The unit is malfunctioning.	Consult your ITT representative for a warranty replacement.

Parts Listings and Cross-Sectionals

Parts list

Table 25: Construction material and quantity

Item	Quantity	Part name	Pump Material				
			All D.I.	D.I. With 316 SS impeller	All 316SS	All CD4MCu	All Alloy 20
100	1	Casing	1012	1012	1203	1216	1204
101	1	Impeller	1013	1203	1203	1216	1204
105	1	Lantern Ring	Teflon				
106	1 set	Stuffing Box Packing	Non-asbestos braid				
107	1	Gland—Packed Box	1203			1204	
108	1	Frame Adapter	1013				
109C	1***	Outboard Bearing End Cover	1001				
112A	1	Outboard Bearing	Double row angular contact (duplex pair for LTi)				
113	2	Plug—Grease Relief	2210				
113B	1	Plug—Oil Fill	2210				
122	1	Shaft—Without Sleeve	2229			2230	
122	1	Shaft—With Sleeve	2238				
126	1	Shaft Sleeve	2229				2230
134	1	Bearing Housing	1001				
136	1	Bearing Locknut	Steel				
168A	1	Radial Bearing	Single row ball				
184	1	Seal Chamber/Stuffing Box Cover	1012	1012	1203	1216	1204
193	2	Grease Fitting	Steel				
228	1	Bearing Frame	STi 1013, All others - 1001				
236A	10	Cap Screw—Bearing Clamp Ring	2210				
239	1	Support, Casing	–	–	2201*	2201*	2201*
241	1	Frame Foot	1001				
248	1	Oil Thrower	2210				
250	1	Gland—Mechanical Seal	Material varies				
253B	1	Bearing Clamp Ring	2210				
319	1	Sight Glass	Glass/steel				
332A	1	Outboard Labyrinth Seal w/O-rings	Brass ASTM B505-96				
333A	1	Inboard Labyrinth Seal w/O-rings	Brass ASTM B505-96				
351	1	Casing Gasket	Aramid fiber w/EPDM				
353	4	Gland Stud	2228				
355	4	Gland Stud Nut	2228				
358	1	Plug—Casing Drain	2210		2229	2230	
358Y	1 ***	Plug, Impeller	2229			2230	
360C	1 ***	Gasket—Thrust End Cover	Buna				
360D	1	Gasket—Frame-to-Adapter	Buna				
360Q	1	Gasket—Gland-to-Stuffing Box Cover	Material varies				
361A	1	Retaining Ring	Steel				
370	****	Bolt—Adapter to Case	2210		2228		
370B	4	Bolt—Frame-to-Adapter	2210				
370C	**	Clamp Bolt —Bearing Housing	2210				
370D	**	Jack Bolt—Bearing Housing	2210				
370F	2	Bolt—Frame Foot to Frame	2210				
370H	2	Stud—Stuffing Box Cover-to-Adapter	2228				
370Y	2	Bolt—Cap Casing to Support	–	–	2210*		
371C	6 ***	Cap Screw-End Cover to Bearing Housing	2210				
382	1	Bearing Lockwasher	Steel				
383	1	Mechanical Seal	Material varies				
400	1	Coupling Key	2210				

Item	Quantity	Part name	Pump Material				
			All D.I.	D.I. With 316 SS impeller	All 316SS	All CD4MCu	All Alloy 20
408A	1	Plug—Oil Drane	2210				
408H	4	Plug—Oil Mist Connection	2210				
408J	1	Plug—Oiler	2210				
408L	1	Plug—Oil Cooler Inlet	2210				
408M	1	Plug—Oil Cooler Outlet	2210				
408N	1	Plug—Sight Glass	2210				
412A	1	O-Ring, Graphoil Impeller	–	–	*		
418	3	Jack Bolt—Adapter-to-Case	2228				
423	3	Jam Nut—Bearing Housing Jack Bolt	2210				
423B	2	Hex Nut—Stuffing Box Cover to Adapter	2228				
428	1	Gasket, Plug	Teflon				
437	1	Lockwasher, Casing to Support	–	–	2210*		
458Y	1 ***	Plug, Impeller	2229			2230	
469B	2	Dowel Pin—Frame-to-Adapter	Steel				
494	1	Tube Element, Finned Cooled	304SS / Copper				
496	1	O-Ring Bearing Housing	Buna N				
412A	1	O-Ring—Impeller	Viton				
497F	1	O-Ring—Outboard Labyrinth Rotor	Viton				
497G	1	O-Ring—Outboard Labyrinth Stator	Viton				
497H	1	O-Ring—Inboard Labyrinth Rotor	Viton				
497J	1	O-Ring—Inboard Laybrinth Stator	Viton				
497L	1	O-Ring Internal (inboard)	Viton				
497N	1	O-Ring Internal (outboard)	Viton				
503	1	Adapter Ring	1013				
529	1	Lockwasher—Frame Foot-to-Bearing Frame	Steel				
555	1	Tube, Finned Cooling Assembly	304AA / Copper				
555A	1	Tube, Ftg Male (Frame Cooling)	Brass				
555B	2	Connector, Thermocouple (Frame Cooling)	Brass				
555C	2	Elbow, Female (Frame Cooling)	Brass				
555D	1	Conn TC Sealed PWR	Cast iron				
761B	1	i-ALERT™ Condition Monitor	Stainless steel/epoxy				

Table 26: Construction material and quantity (continued)

Item	Quantity	Part name	Pump Material				
			All 317SS	All Monel	All Nickel	All Hastelloy C	All Hastelloy B
100	1	Casing	1209	1119	1601	1215	1217
101	1	Impeller	1209	1119	1601	1215	1217
105	1	Lantern Ring	Teflon				
106	1 set	Stuffing Box Packing	Non-asbestos braid				
107	1	Gland—Packed Box	1209	1119	1601	1215	1217
108	1	Frame Adapter	1013				
109C	1***	Outboard Bearing End Cover	1001				
112A	1	Outboard Bearing	Double row angular contact (duplex pair for LTi)				
113	2	Plug—Grease Relief	2210				
113B	1	Plug—Oil Fill	2210				
122	1	Shaft—Less Sleeve	2232	2150	2155	2248	2247
122	1	Shaft—With Sleeve	2229				
126	1	Shaft Sleeve	2232	2150	2155	2248	2247
134	1	Bearing Housing	1001				
136	1	Bearing Locknut	Steel				
168A	1	Radial Bearing	Single row ball				
184	1	Seal Chamber/Stuffing Box Cover	1209	1119	1601	1215	1217
193	2	Grease Fitting	Steel				

Item	Quantity	Part name	Pump Material				
			All 317SS	All Monel	All Nickel	All Hastelloy C	All Hastelloy B
228	1	Bearing Frame	STi-1013, All others - 1001				
236A	10	Cap Screw—Bearing Clamp Ring	2210				
239	1	Support, Casing	–	–	–	2201*	–
241	1	Frame Foot	1001				
248	1	Oil Thrower	2210				
250	1	Gland—Mechanical Seal	Material varies				
253B	1	Bearing Clamp Ring	2210				
319	1	Sight Glass	Glass/steel				
332A	1	Outboard Labyrinth Seal w/O-rings	Brass ASTM B505-96				
333A	1	Inboard Labyrinth Seal w/O-rings	Brass ASTM B505-96				
351	1	Casing Gasket	Aramid fiber w/EPDM				
353	4	Gland Stud	2232	2150	2155	2248	2247
355	4	Gland Stud Nut	2232	2150	2155	2248	2247
358	1	Plug—Casing Drain	2232	2150	2156	2248	2247
358Y	1 ***	Plug, Impeller	2232	2150	2156	2248	2156
360C	1 ***	Gasket—Thrust End Cover	Buna				
360D	1	Gasket—Frame-to-Adapter	Buna				
360Q	1	Gasket—Gland-to-Stuffing Box Cover	Material varies				
361A	1	Retaining Ring	Steel				
370	****	Bolt—Adapter to Case	2228				
370B	4	Bolt—Frame-to-Adapter	2210				
370C	**	Clamp Bolt —Bearing Housing	2210				
370D	**	Jack Bolt—Bearing Housing	2210				
370F	2	Bolt—Frame Foot to Frame	2210				
370H	2	Stud—Stuffing Box Cover-to-Adapter	2228				
370H	2	Bolt—Cap Casing to Support	–	–	–	2210*	–
371C	6 ***	Cap Screw-End Cover to Bearing Housing	2210				
382	1	Bearing Lockwasher	Steel				
383	1	Mechanical Seal	Material varies				
400	1	Coupling Key	2210				
408A	1	Plug—Oil Drane	2210				
408H	4	Plug—Oil Mist Connection	2210				
408J	1	Plug—Oiler	2210				
408L	1	Plug—Oil Cooler Inlet	2210				
408M	1	Plug—Oil Cooler Outlet	2210				
408N	1	Plug—Sight Glass	2210				
412A	1	O-Ring, Graphoil Impeller	–	–	–	*	–
418	3	Jack Bolt—Adapter-to-Case	2228				
423	3	Jam Nut—Bearing Housing Jack Bolt	2210				
423B	2	Hex Nut—Stuffing Box Cover to Adapter	2228				
428	1	Gasket, Plug	Teflon				
437	1	Lockwasher, Casing to Support	–	–	–	2210*	–
458Y	1***	Plug, Impeller	2232	2150	2155	2248	2247
469B	2	Dowel Pin—Frame-to-Adapter	Steel				
494	1	Tube Element, Finned Cooled	304SS / Copper				
496	1	O-Ring Bearing Housing	Buna N				
412A	1	O-Ring—Impeller	Viton				
497F	1	O-Ring—Outboard Labyrinth Rotor	Viton				
497G	1	O-Ring—Outboard Labyrinth Stator	Viton				
497H	1	O-Ring—Inboard Labyrinth Rotor	Viton				
497J	1	O-Ring—Inboard Laybrinth Stator	Viton				
497L	1	O-Ring Internal (inboard)	Viton				
497N	1	O-Ring Internal (outboard)	Viton				
503	1	Adapter Ring	1013				

Item	Quantity	Part name	Pump Material				
			All 317SS	All Monel	All Nickel	All Hastelloy C	All Hastelloy B
529	1	Lockwasher—Frame Foot-to-Bearing Frame	Steel				
555	1	Tube, Finned Cooling Assembly	304AA / Copper				
555A	1	Tube, Ftg Male (Frame Cooling)	Brass				
555B	2	Connector, Thermocouple (Frame Cooling)	Brass				
555C	2	Elbow, Female (Frame Cooling)	Brass				
555D	1	Conn TC Sealed PWR	Cast iron				
761B	1	i-ALERT™ Condition Monitor	Stainless steel/epoxy				

Table 27: Construction material and quantity (continued)

Item	Quantity	Part name	Pump Material (3196, HT 3196, CV 3196, 3796)	Pump Material (NM 3196)	Pump Material (3198)
			All Titanium	Vinylester	D.I./Teflon
100	1	Casing	1220	6929	9639
101	1	Impeller	1220	6929	6944
105	1	Lantern Ring	Teflon	–	–
106	1 set	Stuffing Box Packing	Non-asbestos braid	–	–
107	1	Gland—Packed Box	1220	–	–
108	1	Frame Adapter	1013		
109C	1***	Outboard Bearing End Cover	1001		
112A	1	Outboard Bearing	Double row angluar contact (duplex pair for LTi)		
113	2	Plug—Grease Relief	2210		
113B	1	Plug—Oil Fill	2210		
122	1	Shaft—Less Sleeve	2156	2229	–
122	1	Shaft—With Sleeve	2229		6947
126	1	Shaft Sleeve	2156	2229	–
134	1	Bearing Housing	1001		
136	1	Bearing Locknut	Steel		
168A	1	Radial Bearing	Single row ball		
184	1	Seal Chamber/Stuffing Box Cover	1220	6929	9639
193	2	Grease Fitting	Steel		
228	1	Bearing Frame	STi - 1013, All others - 1001		
236A	10	Cap Screw—Bearing Clamp Ring	2210		
239	1	Support, Casing	–	–	–
241	1	Frame Foot	1001		
248	1	Oil Thrower	2210		
250	1	Gland—Mechanical Seal	Material varies		
253B	1	Bearing Clamp Ring	2210		
319	1	Sight Glass	Glass/steel		
332A	1	Outboard Labyrinth Seal w/O-rings	Brass ASTM B505-96		
333A	1	Inboard Labyrinth Seal w/O-rings	Brass ASTM B505-96		
351	1	Casing Gasket	Aramid fiber w/EPDM		
353	4	Gland Stud	2156	2229	2229
355	4	Gland Stud Nut	2156	2229	2229
358	1	Plug—Casing Drain	2156	–	–
358Y	1 ***	Plug, Impeller	2156	–	–
360C	1 ***	Gasket—Thrust End Cover	Buna		
360D	1	Gasket—Frame-to-Adapter	Buna		
360Q	1	Gasket—Gland-to-Stuffing Box Cover	Material varies		
361A	1	Retaining Ring	Steel		
370	****	Bolt—Adapter to Case	2228		
370B	4	Bolt—Frame-to-Adapter	2210		
370C	**	Clamp Bolt —Bearing Housing	2210		
370D	**l	Jack Bolt—Bearing Housing	2210		
370F	2	Bolt—Frame Foot to Frame	2210		

Item	Quantity	Part name	Pump Material (3196, HT 3196, CV 3196, 3796)	Pump Material (NM 3196)	Pump Material (3198)
			All Titanium	Vinylester	D.I./Teflon
370H	2	Stud—Stuffing Box Cover-to-Adapter	2228		
370Y	2	Bolt—Cap Casing to Support	–	–	–
371C	6 ***	Cap Screw-End Cover to Bearing Housing	2210		
382	1	Bearing Lockwasher	Steel		
383	1	Mechanical Seal	Material varies		
400	1	Coupling Key	2210		
408A	1	Plug—Oil Drane	2210		
408H	4	Plug—Oil Mist Connection	2210		
408J	1	Plug—Oiler	2210		
408L	1	Plug—Oil Cooler Inlet	2210		
408M	1	Plug—Oil Cooler Outlet	2210		
408N	1	Plug—Sight Glass	2210		
412A	1	O-Ring, Graphoil Impeller	–	–	–
418	3	Jack Bolt—Adapter-to-Case	2228		
423	3	Jam Nut—Bearing Housing Jack Bolt	2210		
423B	2	Hex Nut—Stuffing Box Cover to Adapter	2228		
428	1	Gasket, Plug	Teflon		
437	1	Lockwasher, Casing to Support	–	–	–
458Y	1 ***	Plug, Impeller	2156	–	–
469B	2	Dowel Pin—Frame-to-Adapter	Steel		
494	1	Tube Element, Finned Cooled	304SS / Copper		
496	1	O-Ring Bearing Housing	Buna N		
412A	1	O-Ring—Impeller	Viton		
497F	1	O-Ring—Outboard Labyrinth Rotor	Viton		
497G	1	O-Ring—Outboard Labyrinth Stator	Viton		
497H	1	O-Ring—Inboard Labyrinth Rotor	Viton		
497J	1	O-Ring—Inboard Laybrinth Stator	Viton		
497L	1	O-Ring Internal (inboard)	Viton		
497N	1	O-Ring Internal (outboard)	Viton		
503	1	Adapter Ring	1013		
529	1	Lockwasher—Frame Foot-to-Bearing Frame	Steel		
555	1	Tube, Finned Cooling Assembly	304AA / Copper		
555A	1	Tube, Ftg Male (Frame Cooling)	Brass		
555B	2	Connector, Thermocouple (Frame Cooling)	Brass		
555C	2	Elbow, Female (Frame Cooling)	Brass		
555D	1	Conn TC Sealed PWR	Cast iron		
761B	1	i-ALERT™ Condition Monitor	Stainless steel/epoxy		

Table 28: Key to table symbols

–	Not applicable
*	Only applicable for HT 3196
**	3 for STi, MTi, LTi 4 for XLT-i, i17
***	XLT-I and i17 only
****	4 for 6 in. STi 8 for 8 in. STi and MTi 16 for 13 in. MTi, LTi , XLT-I 24 for 15 in. XLT-I 12 for 10 in. MTi, LTi , i17

Table 29: Material-code reference

Material	Goulds material code	ASTM	Din	ISO	JIS
Cast Iron	1001	A48 CLASS 20			
Ductile Iron	1012	A395 Gr60-40-18			
Ductile Iron	1013	A536 Gr60-42-10			
CD4MCu	1041	A744 CD4MCU			
Monel	1119	A494 GrM-35-1			
316SS	1203	A744 CF-8M	1.4408		G5121 (SC514)
Alloy 20	1204	A744CN-7M	1.4500		
317SS	1209	A744CG-8M	1.4448		
Hastelloy C	1215	A494 CW-6M			
CD4MCu	1216	A744CD4MCU	9.4460		
Hastelloy B	1217	A494 N-7M			
Titanium	1220	B367 GrC-3			
Nickel	1601	A494 GrCZ100			
Monel	2150	B164 UNS N04400			
Nickel	2155	B160 UNS N02200			
Titanium	2156	B348 Gr2			
Carbon Steel	2201	A576 Gr. 1018 and 1020			
Carbon Steel	2210	A108Gr1211			
304SS	2228	A276 Type 304			
316SS	2229	A276 Type 316			
Alloy 20	2230	B473 (N08020)			
317SS	2232	A276			
4150 Steel	2237	A322Gr4150			
4140 Steel	2238	A434Gr4140			
4140 Steel	2239	A193 Gr. B7			
Alloy B-2	2247	B335 (N10665)			
Alloy C-276	2248	B574 (N10276)			
GMP-2000	6929	N/A			
PFA Lined Steel	6944	N/A			
PFA Lined 316SS	6947	N/A			
PFA Lined Ductile Iron	9639	N/A			

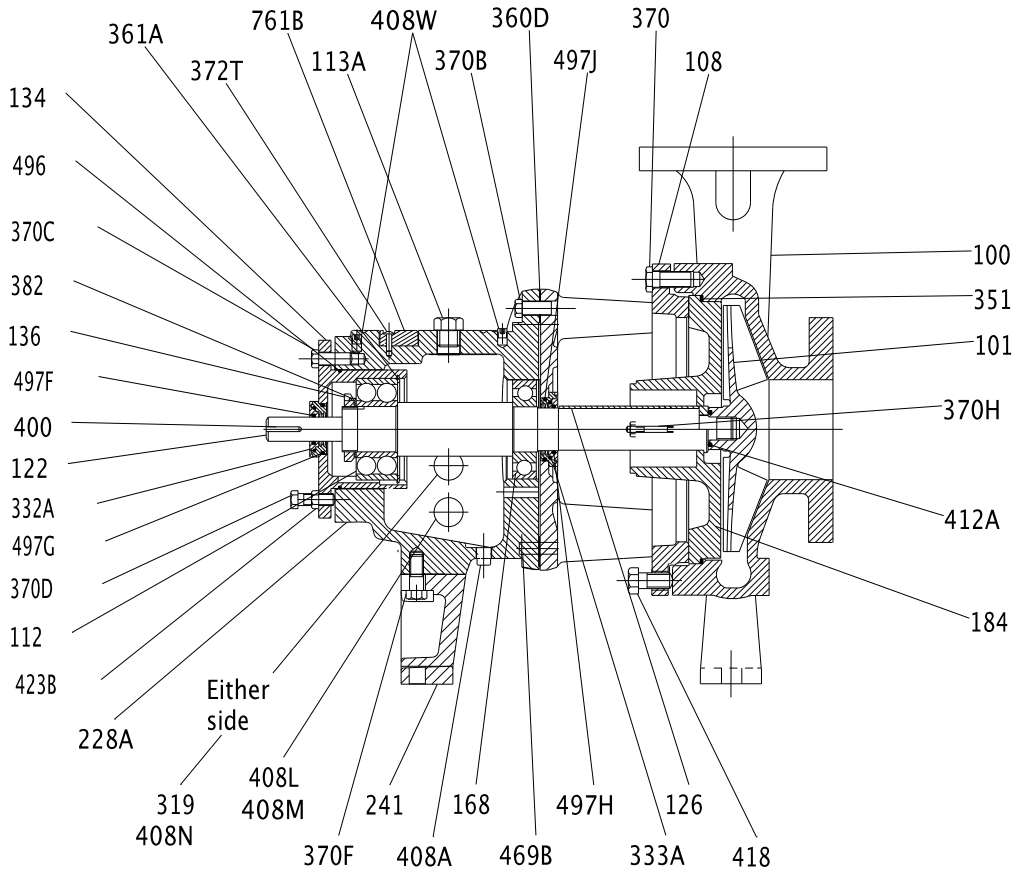

Figure 33: 3196 cross-sectional drawing

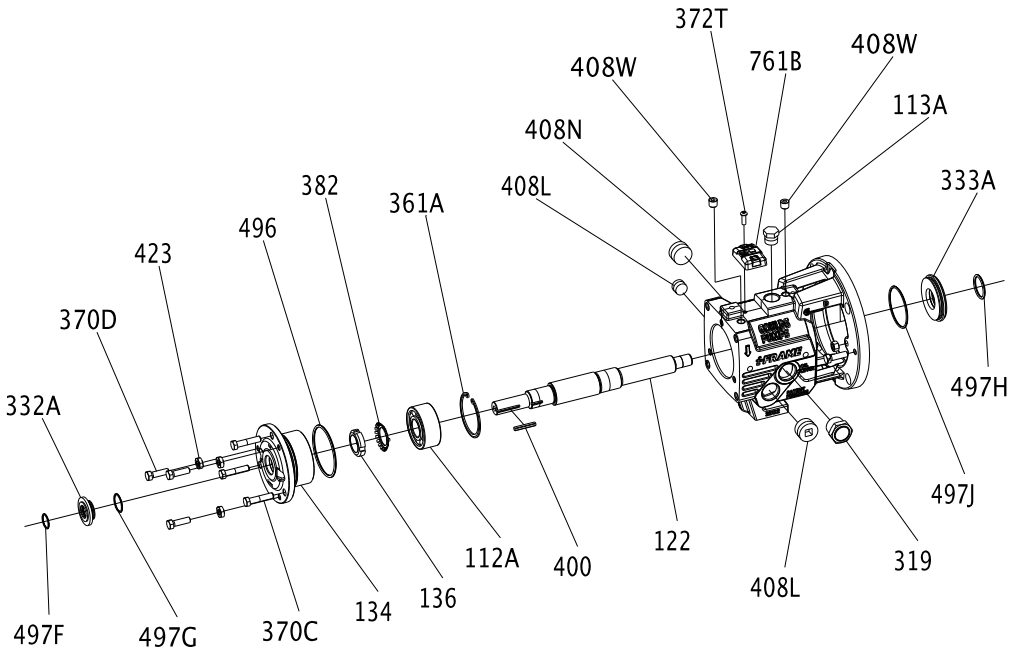

Figure 34: STi bearing-frame exploded view

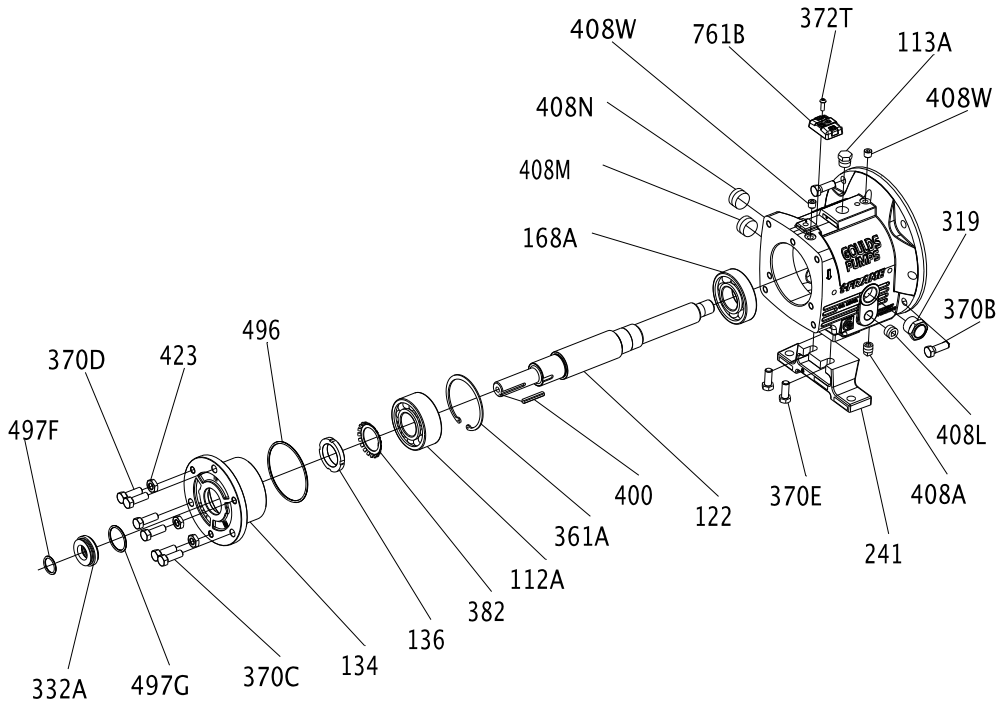

Figure 35: MTi bearing-frame exploded view

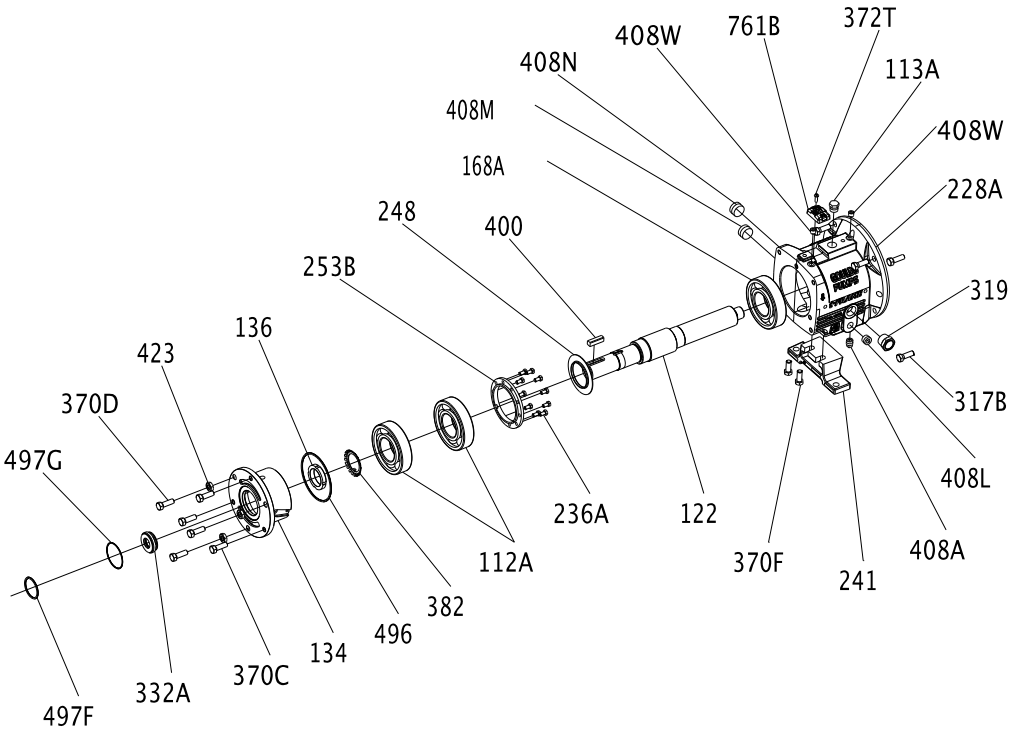

Figure 36: LTi bearing-frame exploded view

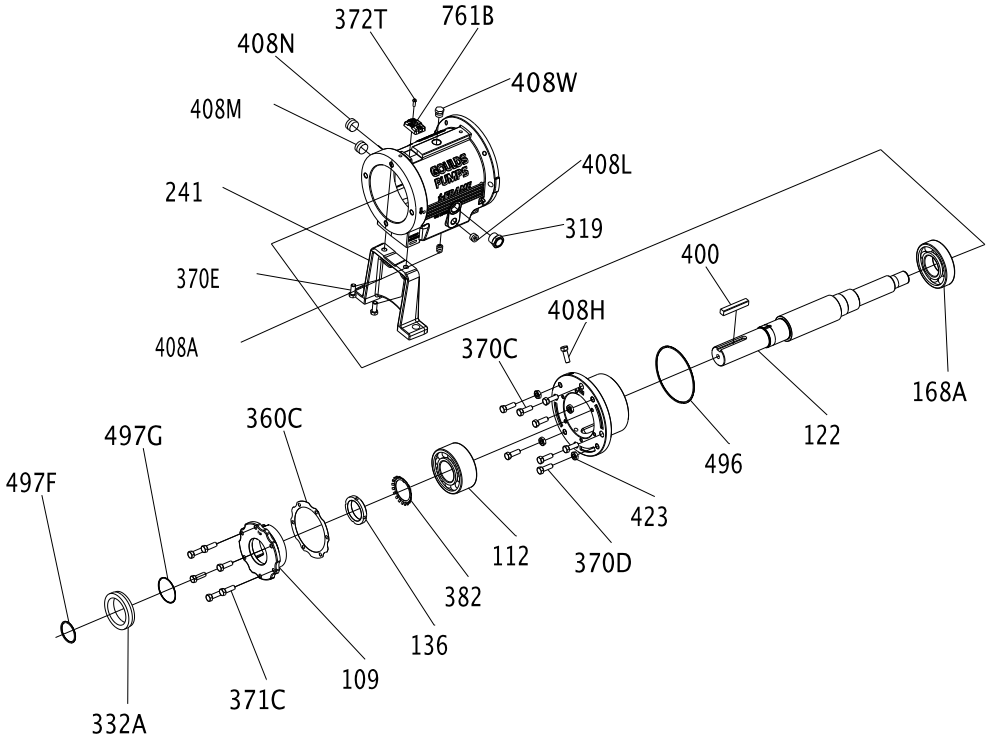

Figure 37: XLT-i bearing-frame exploded view

The finned-tube oil cooler is standard on HT 3196 and optional on all other models.

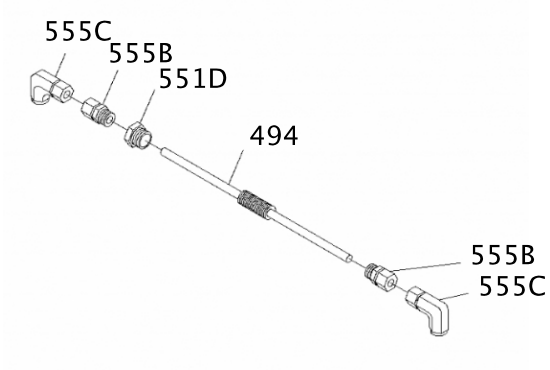

Figure 38: Finned-tube oil cooler exploded view

Certification: CE or CE ATEX

Certificates of conformance

CSA Certificate

CSA INTERNATIONAL

Certificate of Compliance

Certificate: 1992883 **Master Contract:** 236924

Project: 2254252 **Date Issued:** 2009/12/16

Issued to: **ITT Corporation**

240 Fall St
Seneca Falls, NY 13148
USA
Attention: Anthony Stavale

The products listed below are eligible to bear the CSA Mark shown with adjacent indicators 'C' and 'US' for Canada and US or with adjacent indicator 'US' for US only or without either indicator for Canada only.

C US

D. Simpson, Certifier

Issued by: D. Simpson, Certifier

PRODUCTS

CLASS 2258 03 - PROCESS CONTROL EQUIPMENT - Intrinsically Safe and Non - Incendive Systems - For Hazardous Locations

CLASS 2258 83 - PROCESS CONTROL EQUIPMENT-Intrinsically Safe and Non-Incendive - Systems-For Hazardous Locations-Certified to U.S. Standards

Class I, Division 1, Group A, B, C and D; Class II, Group E, F and G; Class III:

- Condition Monitor, Model LCCM, p/n C07667A, battery operated (non-replaceable, non-rechargeable), intrinsically safe, temperature code T4 (at max ambient of 100C).

APPLICABLE REQUIREMENTS

CAN/CSA-C22.2 No. 0-M91 - General Requirements – Canadian Electrical Code, Part II

CAN/CSA-C22.2 No.157-92 - Intrinsically Safe and Non-Incendive Equipment for Use in Hazardous Locations

UL Std No.913, Ed. 7 - Intrinsically Safe Apparatus and Associated Apparatus for Use in Class I, II and III, Division 1, Hazardous Locations

DQD 507 Rev. 2009-09-01

CSA INTERNATIONAL

Certificate:	1992883	**Master Contract:**	236924
Project:	2254252	**Date Issued:**	2009/12/16

UL Std No. 969, 4th Edition - UL standard for safety marking and labeling systems

MARKINGS

- submittor's identification
- model designation
- date code or serial number
- Hazardous Location designations
- temperature code rating
- maximum ambient temperature
- the CSA Mark, with the C/US indicator
- the warning, WARNING: NOT FOR USE IN ATMOSPHERES CONTAINING ACETIC ACID
- the words "Ex ia" and "Intrinsically safe"

DQD 507 Rev. 2009-09-01

ATEX notification

DET NORSKE VERITAS

PRODUCTION QUALITY ASSURANCE NOTIFICATION

[2] EQUIPMENT OR PROTECTED SYSTEM INTENDED FOR USE IN POTENTIALLY EXPLOSIVE ATMOSPHERES DIRECTIVE 94/9/EC

[3] Notification Number: **DNV-2008-OSL-ATEX-30303Q** Rev. 1

[4] Equipment or Protective Systems or components as listed: **Intrinsically safe equipment**

(The EC-Type Examination Certificates based on this notification are listed by the notified body)

[5] Applicant –Manufacturer or Authorized Representative in the Community: **ITT Industries, Goulds Pumps**
204 Fall St.,
Seneca Falls, New York 13148 USA

[6] Manufacturer: **ITT Industries, Goulds Pumps**

[7] DNV, notified body number 0575 for Annex IV in accordance with Article 9 of the Council Directive 94/9/EC of 23 March 1994, notifies to the applicant that the actual manufacturer has a production quality system which complies to Annex IV of the Directive.

[8] This notification is based on audit report: **2008-3354**
This notification can be withdrawn if the manufacturer no longer satisfies the requirements of Annex IV

Results of periodical re-assessment of the manufacturing process is a part of this notification.

[9] This notification is valid until **2011-06-25** and can be withdrawn if the manufacturer does not satisfy the production quality re-assessment.

[10] According to article 10[1] of the Directive 94/9/EC the CE marking shall be followed by the identification Number 0575 identifying the notified body involved in the production control stage.

Høvik, 2008-09-05
for Det Norske Veritas Certification AS

Marianne Spæren
Certification Manager

Bjørn Spongsveen
Technical Reviewer

Notice: This notification may only be reproduced in its entirety and without any change

IECEx Certificate of Conformity

IECEx Certificate of Conformity

INTERNATIONAL ELECTROTECHNICAL COMMISSION
IEC Certification Scheme for Explosive Atmospheres
for rules and details of the IECEx Scheme visit www.iecex.com

Certificate No.: IECEx LCI 08.0038 issue No.:0 Certificate history:

Status: Current

Date of Issue: 2008-09-16 Page 1 of 3

Applicant: **ITT Corp.**
Goulds pumps
240 Fall Street
Seneca Falls, NY 13148
United States of America

Electrical Apparatus: **Condition Monitor**
Optional accessory:

Type of Protection: **ia**

Marking: **ITT Corp.**
Goulds pumps
240 Fall Street
Seneca Falls, NY 13148
U.S.A.
Condition Monitor
Type : LCCM, p/n C07667A
Ex ia IIC T4
Tamb : -40°C à 100°C

Approved for issue on behalf of the IECEx Certification Body: Marc Gilaux

Position: Ex Certification Manager

Signature: (for printed version)

Date: le 16 Septembre 2

1. This certificate and schedule may only be reproduced in full.
2. This certificate is not transferable and remains the property of the issuing body.
3. The Status and authenticity of this certificate may be verified by visiting the Official IECEx Website.

Certificate issued by:

Laboratoire Central des Industries Electriques (LCIE)
33 Avenue du General Leclerc
FR-92260 Fontenay-aux-Roses
France

IECEx Certificate of Conformity

Certificate No.: IECEx LCI 08.0038

Date of Issue: 2008-09-16 Issue No.: 0

Page 2 of 3

Manufacturer: **ITT Corp.**
Goulds pumps
240 Fall Street
Seneca Falls, NY 13148
United States of America

Manufacturing location(s):

This certificate is issued as verification that a sample(s), representative of production, was assessed and tested and found to comply with the IEC Standard list below and that the manufacturer's quality system, relating to the Ex products covered by this certificate, was assessed and found to comply with the IECEx Quality system requirements. This certificate is granted subject to the conditions as set out in IECEx Scheme Rules, IECEx 02 and Operational Documents as amended.

STANDARDS:
The electrical apparatus and any acceptable variations to it specified in the schedule of this certificate and the identified documents, was found to comply with the following standards:

IEC 60079-0 : 2004 Edition: 4.0	Electrical apparatus for explosive gas atmospheres - Part 0: General requirements
IEC 60079-11 : 2006 Edition: 5	Explosive atmospheres - Part 11: Equipment protection by intrinsic safety "i"

*This Certificate **does not** indicate compliance with electrical safety and performance requirements other than those expressly included in the Standards listed above.*

TEST & ASSESSMENT REPORTS:
A sample(s) of the equipment listed has successfully met the examination and test requirements as recorded in

Test Report:

FR/LCI/ExTR08.0043/00

Quality Assessment Report:
NO/DNV/QAR08.0006/00

Chinese Certificate of Conformity

CONFORMITY CERTIFICATE OF EXPLOSION-PROOF

PCEC

Certificate No.: CB082171

Name of Product:	Condition Monitor
Type of Product:	LCCM, p/n C07667A
Marking:	Exia II CT4
Technical Documents:	/
Drawing No.:	C07667A
Note (s):	1.The power is supplied by PANASONIC battery. The battery type is BR2477A 3V. 2.The manufacturer address: Goulds pumps, 240 Fall Street, Seneca Falls, NY 13148, U.S.A.

By verifying the drawings and technical documents and checking samples, the product complies with the following standards currently valid in P.R.China:

GB3836.1-2000 GB3836.4-2000

Issued to:	ITT Corp.
Date of Expire:	2013-12-22
Date of Issue:	2008-12-22

Center seal

Director

Xu Gang

PCEC has been approved by

Supervision & Test Center of Ex- products of China Petroleum & Chemical Industry

注: 本证仅对与送检样品一致的产品有效.
Note: This certificate is only valid for the products that are in accord with sample(s) tested and verified.
中心地址:中国天津市丁字沽三号路85号 邮政编码: 300131 电话/传真: 022-26651066 /26689116
Center Add: No.85 No.3 Road DingZiGu Tianjin China Post code: 300131 Tel/ Fax: 022-26651066/26689116
E-mail:cec@pcec.com.cn http://www.pcec.com.cn

Other Relevant Documentation or Manuals

For additional documentation

For any other relevant documentation or manuals, contact your ITT representative.

Local ITT Contacts

Regional offices

Region	Address	Telephone	Fax
North America (Headquarters)	ITT - Goulds Pumps 240 Fall Street Seneca Falls, NY 13148 USA	+1 315-568-2811	+1 315-568-2418
Asia Pacific	ITT Industrial Process 10 Jalan Kilang #06-01 Singapore 159410	+65 627-63693	+65 627-63685
Europe	ITT - Goulds Pumps Millwey Rise Industrial Estate Axminster, Devon, England EX13 5HU	+44 1297-630250	+44 1297-630256
Latin America	ITT - Goulds Pumps Camino La Colina # 1448 Condominio Industrial El Rosal Huechuraba Santiago 8580000 Chile	+562 544-7000	+562 544-7001
Middle East and Africa	ITT - Goulds Pumps Achileos Kyrou 4 Neo Psychiko 115 25 Athens Greece	+30 210-677-0770	+30 210-677-5642

Visit our website for the latest version of this document and more information:

http://www.gouldspumps.com

ENGINEERED FOR LIFE

240 Fall Street
Seneca Falls, NY 13148
USA
Tel. 1-800-446-8537
Fax (315) 568-2418

© 2014 ITT Corporation
The original instruction is in English. All non-English instructions are translations of the original instruction.

Form en-US.2014-07.IOM.3196.i-FRAME

ASHCROFT®
Trust the shield.™

Type 1130 – 2˝, 2½˝, 3½˝, 4˝, 4½˝, & 6˝ Differential Gauge

- *Piston actuator*
- *Stainless steel case*
- *Ranges from 5 psid-150 psid*
- *Static pressures up to 6000 psi[4]*
- *Aluminum[3], brass or stainless steel bodies[1]*
- *Buna-N O-rings (others available)*
- *Superior magnets for smoother pointer motion*
- *Standard or explosion-proof reed switches available*
- *5-year warranty*

The Type 1130 uses a piston design where small migration of the process media is permissible.[1] It is recommended for high differential and high static pressures, up to 6000 psi. Body materials are available in Aluminum, Brass and Stainless Steel, with Buna, Viton or EPDM seals.[2]

NOTES:

(1) Not for use with incompatible media.

(2) Other wetted parts include stainless steel spring, Teflon piston and ceramic magnet.

(3) Aluminum bodies not to be used with water or corrosive applications.

(4) Static pressure over 3000 psi in SS only.

PRODUCT SPECIFICATIONS

Model Number:	1130
Accuracy (Ascending):	±2%
Migration:	Minor
Ranges:	0-5 psid to 150 psid
Maximum Static Pressure:	3000 psi (6000 psi for SS)
Actuator:	Piston
Case Material:	Stainless steel
Dial Size:	2˝ (20), 2½˝ (25), 3½˝ (35), 4˝ (40), 4½˝ (45), 6˝ (60)
Maximum Process Temp.:	175°F/80°C
Body Materials:	Aluminum (F), brass (A), stainless steel (S)
O-Rings/Diaphragm:	Buna-N
Connection Size (Female):	¼ NPT (25)
Connection Location:	In-Line (S), Lower (L), Back (B)
Window:	Glass

PRODUCT OPTIONS

Switches[1]:		Available
⅛ NPT Female Adapter:	XGE	Available
Front Flange:	XFF	Available
Viton O-Rings:	XVD	Available
EPDM O-Rings:	XEM	Available
Fill[3]:		
Glycerin	L	Standard
Silicone	XGV	Available
Window		
Plastic:	XPD	Available
Explosion Proof:	XEK	Available[2]
Pipe Mounting Bracket:	XTM	In-line (only)

(1) Applicable to switches:
XV1 – 1 SPST with DIN plug
XV2 – 1 SPST with terminal strip
XV3 – 2 SPST with DIN plug
XV4 – 2 SPST with terminal strip
XV5 – 1 SPDT with DIN plug
XV6 – 1 SPDT with terminal strip
XV7 – 2 SPDT with DIN plug
XV8 – 2 SPDT with terminal strip
Adjustable from 20-100% of range
Preset at 90% ascending
Terminal or DIN connected switches are not available with back connection

(2) Specify lower or back connection for gauge (not available in-line) and switch type V2, V4, V6, V8

(3) Liquid fill has an effect on accuracy that varies with range and temperature. Liquid filling may be required only in some very severe applications.

HOW TO ORDER:

25 1130 FD 25S XXX 30#

Dial Size: 2˝, 2½˝, 3½˝, 4˝, 4½˝, & 6˝ — 25
Case Type Number: 1130 — 1130
Body Material — FD
Connection Size: ¼ NPTF (25) — 25S
Connection Location: In-line (S), Lower (L), Back (B) — 25S
Optional Features: see above — XXX
Standard Pressure Range — 30#

ISO 9001
REGISTERED FIRM
BULLETIN DP-1130

All specifications are subject to change without notice.
All sales subject to standard terms and conditions.
© Ashcroft Inc. 2010 09/14

Ashcroft Inc., 250 East Main Street, Stratford, CT 06614 USA
Tel: 203-378-8281 • Fax: 203-385-0408
email: info@ashcroft.com • www.ashcroft.com

Type 1130 – 2″, 2½″, 3½″, 4″, 4½″, & 6″ Differential Gauge

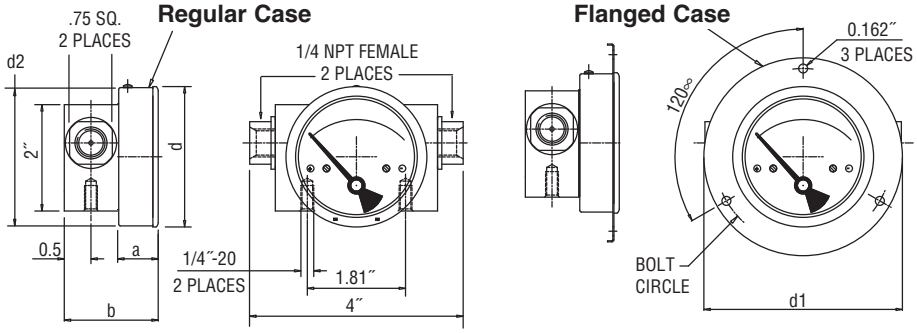

Type 1130 Dimension Drawing

Dial Size	a	b	d	d¹	d²	Bolt Circle
2″	0.70″	1.70″	2.08″	3.11″	2.04″	2.72″
2.5″	0.75″	1.75″	2.59″	3.66″	2.55″	3.26″
3.5″	0.75″	1.75″	3.26″	4.29″	3.22″	3.89″
4″	0.75″	1.75″	4.10″	5.15″	4.01″	4.76″
4.5″	0.75″	1.75″	4.71″	5.74″	4.60″	5.35″
6″	0.75″	1.75″	6.07″	7.12″	6.00″	6.73″

Type 1130 – Standard Ranges

psi		0-5	0-8	0-10	0-15	0-20	0-25	0-30	
kPa	0-25		0-50	0-75	0-100		0-160	0-200	0-250
kg/cm²-bar	0-0.25		0-0.5	0-0.75	0-1		0-1.6	0-2	0-2.5

psi	0-40	0-50	0-60		0-80		0-100		0-150
kPa	0-300		0-400	0-500		0-600	0-700	0-900	0-1000
kg/cm²-bar	0-3		0-4	0-5		0-6	0-7	0-9	0-10

Ratings for Both Standard & Explosion Proof Switches:

SPST SWITCH

Specifications:

Contact Rating
10 VA ac (rms) or dc (max)

Switching Current
0.5 Amp ac (rms) or dc (max)

Switch Voltage
100 Vac/Vdc (max)

SPDT SWITCH

Specifications:

Contact Rating
3 VA ac (rms) or dc (max)

Switching Current
.3 Amp ac (rms) or dc (max)

Switch Voltage
30 Vac/Vdc (max)

Explosion Proof Switches Information:

Switches and electrical connections are mounted in an explosion-proof enclosure with UL, CSA, Cenelec and FM approval. The enclosure meets Class 1, Groups B, C, D, Class 2 Groups E, F, G, Class 3, NEMA 7 & 9 and IP 66. Two ¾″ electrical conduit connections.

All specifications are subject to change without notice.
All sales subject to standard terms and conditions.
© Ashcroft Inc. 2010 09/14

Ashcroft Inc., 250 East Main Street, Stratford, CT 06614 USA
Tel: 203-378-8281 • Fax: 203-385-0408
email: info@ashcroft.com • www.ashcroft.com

ASHCROFT®
Trust the shield.™

Type 1259 Process Pressure Gauge

- *Solid front safety case*
- *Accuracy complies with ASME B40.1 Grade 2A (±0.5% of span)*
- *As-welded Bourdon tube for safety and longer life*
- *Micrometer adjustable pointer.*
- *Adjustable movement*
- *Ranges: vac to 20,000 psi*
- *Date coded socket to ensure pedigree*
- *Wetted part material printed on dial*
- *Liquid filled case option (Code L)*

The Type 1259 process gauge is offered with an as-welded Bourdon tube to ensure safety and a long life. Meeting ASME B40.1, the Type 1259 process gauge has been engineered to meet marketplace requirements.

TEMPERATURE LIMITS

	Ambient	Process	Storage
Dry	–20/200°F (–29/93°C)	–20/250°F (–29/121°C)	–40/250°F (–40/121°C)
LF (glycerin)	20/150°F (7/66°C)	20/200°F (7/93°C)	0/150°F (–18/66°C)

Note: Other than discoloration of the dial and hardening of the gasketing that may occur as ambient or process temperatures exceeds 150°F, non-liquid-filled gauges with standard glass windows, can withstand continuous operating temperatures up to 250°F (121°C). Liquid-filled gauges can withstand 200°F (93°C) but glycerin fill and acrylic window will tend to yellow. Accuracy at temperatures above or below the reference ambient temperature of 68°F (20°C) will be affected by approximately .4% per 25°F. Gauges with welded joints will withstand 750°F (450°F (232°C) with silver brazed joints) for short times without rupture, although other parts of the gauge will be destroyed and calibration will be lost. For continuous use and for process or ambient temperatures above 250°F (121°C), a diaphragm seal or capillary or siphon is recommended.

PRODUCT SPECIFICATIONS

Model Number:	1259
Accuracy:	½% full scale (Grade 2A, ASME B40.100)
Ranges:	Vacuum – 20,000 psi
Ring Type:	Cam lock, fiberglass reinforced thermoplastic
Dial Size:	4½″ diameter
Case:	Solid front safety
Case Material:	Fiberglass reinforced thermoplastic
Weather Protection:	Dry Case: IP54 Liquid filled or hermetically sealed case: IP 65
Window:	Glass
Dial:	Aluminum, white background, black pressure scale.
Pointer:	Micrometer adjustable
Movement:	Adjustable 300 series ss
Bourdon Tube & Socket:	316L SS/316L SS (S)[1] K Monel/Monel (P)[1]
Conn. Size:	¼, ½ NPT
Conn. Location:	Lower
Weight (Lbs.)	2.5 (Dry) 3.5 (Liquid Filled)

PRODUCT OPTIONS

Fill:	Glycerin
Hermetic Seal:	XLJ
Flush Mounting Ring:	X56, X57
Shatter Proof Glass Window:	XSG
Window Acrylic:	XPD

[1] Joints welded

Dimensions

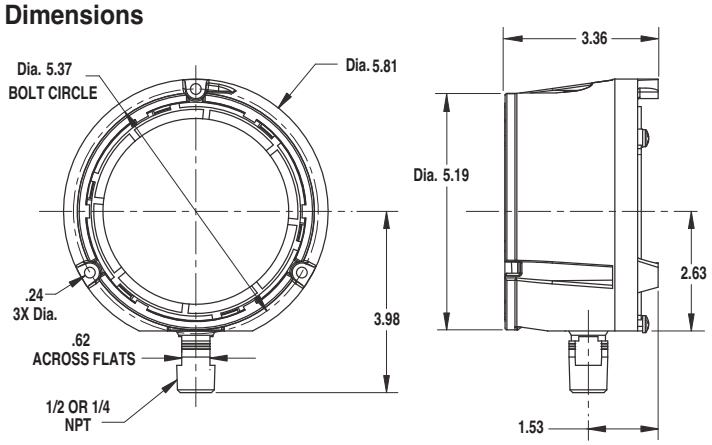

All specifications are subject to change without notice.
All sales subject to standard terms and conditions.
© 2014 Ashcroft Inc. 11/14

Ashcroft Inc., 250 East Main Street, Stratford, CT 06614 USA
Tel: 203-378-8281 • Fax: 203-385-0408
email: info@ashcroft.com • www.ashcroft.com

ASHCROFT®
Trust the shield.™

Type 1259 Process Pressure Gauge

PSI RANGES
Pressure – psi
Range
0/15
0/30
0/60
0/100
0/160
0/200
0/300
0/400
0/600
0/800
0/1000
0/1500
0/2000
0/3000
0/4000
0/6000
0/10,000
0/20,000
Vacuum
30/0 in.Hg
34/0 ftH_20
Compound
30˝Hg/15 psi
30˝Hg/30 psi
30˝Hg/60 psi
30˝Hg/100 psi
30˝Hg/150 psi
30˝Hg/300 psi

METRIC RANGES	
Pressure – kg/cm² and bar	
Range	**(Outer Scale) psi**
0/1	0/14
0/1.6	0/22
0/2.5	0/35
0/4	0/55
0/6	0/85
0/10	0/140
0/16	0/220
0/25	0/350
0/40	0/550
0/60	0/850
0/100	1400
0/160	2200
0/250	3500
0/400	5500
0/600	8500
0/1000	14,000
0/1600	22,000
Vacuum	**Outer Scale**
–1/0	30˝Hg
Compound	
–1/0/1.5	30˝Hg/20
–1/0/3	30˝Hg/40
–1/0/5	30˝Hg/70
–1/0/9	30˝Hg/125
–1/0/15	30˝Hg/215
–1/0/24	30˝Hg/340

METRIC RANGES	
Pressure – kPa	
Range	**(Outer Scale) psi**
0/100	0/14
0/160	0/22
0/250	0/35
0/400	0/55
0/600	0/85
0/1000	0/140
0/1600	0/220
0/2500	0/350
0/4000	0/550
0/6000	0/850
0/10,000	1400
0/16,000	2200
0/25,000	3500
0/40,000	5500
0/60,000	8500
0/100,000	14,000
0/160,00	22,000
Vacuum	**Outer Scale**
–100/0	30˝Hg
Compound	
–100/0/150	30˝Hg/20
–100/0/300	30˝Hg/40
–100/0/500	30˝Hg/70
–100/0/900	30˝Hg/125
–100/0/1500	30˝Hg/215
–100/0/2400	30˝Hg/340

METRIC RANGES	
Pressure – mPa	
Range	**(Outer Scale) psi**
0/0.1	0/14
0/0.16	0/22
0/0.25	0/35
0/0.4	0/55
0/0.6	0/85
0/1	0/140
0/1.6	0/220
0/2.5	0/350
0/4	0/550
0/6	0/850
Vacuum	**Outer Scale**
–0.1/0	30˝Hg
Compound	
–0.1/0/0.15	30˝Hg/20
–0.1/0/0.3	30˝Hg/40
–0.1/0/0.5	30˝Hg/70
–0.1/0/0.9	30˝Hg/125
–0.1/0/1.5	30˝Hg/215
–0.1/0/2.4	30˝Hg/340

Order Coding Example

45	1259	S	S	04	L	OPTIONAL X VARIATIONS	100	#

SIZE	TYPE	SYSTEM (TUBE & SOCKET)	CASE DESIGN SOLID FRONT	PROCESS CONNECTION SIZE	CONNECTION LOCATION	OPTIONS (X VARIATIONS)[1]	RANGE	ENGINEERING UNITS
(45) 4½	**1259**	**(S)** 316L[2] **(P)** K-Monel 500 tube, Monel 400 socket[2] [2] Max pressure 30,000psi	**(S)** Dry (IP54) **(SL)** Liquid filled (glycerin standard) (IP65)	**(02)** 1/4 NPT male **(04)** 1/2 NPT male	**(L)** Lower	**(LJ)** Hermetically Sealed, IP65 **(NH)** St. St. Wired Tag **(PD)** Acrylic window **(SG)** Safety glass **(56)** Flush mounting ring [1] Others on request	See above	**(#)** PSI **(BR)**) Bar **(KG)** Kilograms/CM2 **(KP)** Kilopascal **(IMV)** Inches of Mercury Vacuum

All specifications are subject to change without notice.
All sales subject to standard terms and conditions.
© 2014 Ashcroft Inc. 11/14

Ashcroft Inc., 250 East Main Street, Stratford, CT 06614 USA
Tel: 203-378-8281 • Fax: 203-385-0408
email: info@ashcroft.com • www.ashcroft.com

REVISIONS					
REV	DESCRIPTION	ECN	DATE	BY	APPROVED
F	Updated Top plate closure, pre cuts	-	6/25/13	JS	-
-	-	-	-	-	-

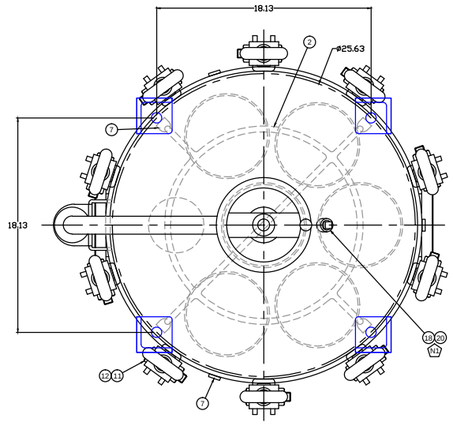

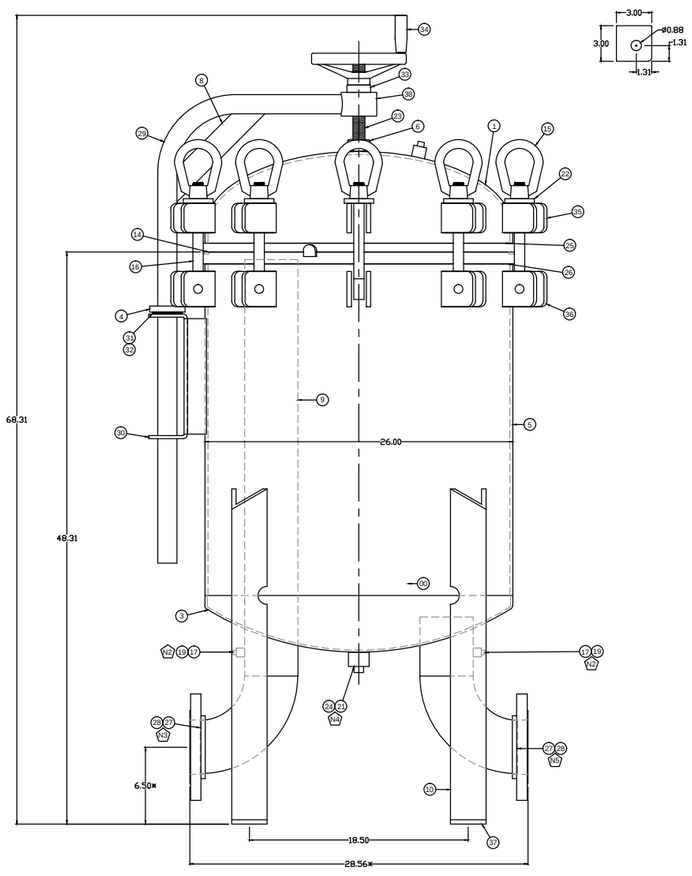

Balloon	Part #	Description	Quantity
38	3RDC	3" ROUND ROD CARBON A36 20FT	2
37	PL-C-144	Plate,Feet,3x3x.375,SA-36	4
36	PL-C-134-NC	Ear,Shell,MR,C/S,SA-36	10
35	PL-C-135-NC	Ear,LID,MR,C/S,SA-36	10
34	KW-30748	Handle Wheel,Aluminum,8"OD,	1
33	1"TB-HD	1" THRUST BEARING, HEAVY DUT	1
32	DTBR	WASHER THRUST TRD 2840	2
31	DTB	DAVIT THRUST BEARINGS TORRIN	1
30	DLBRC	BRACKET DAVIT LIFT 1/4" HR	1
29	DLAC	DAVIT LIFT ARM CARBON	1
28	4FC	4" RFSO FLANGE CARBON 150#	2
27	4-90-C	4" 90 DEGREE CARBON ELBOW LR	2
26	26TPC6D4	TOP PLATE.26.75"OD,1"T,6 Bag	1
25	HR-26.75-C-PART	Head Ring,26.75"OD,SA-36	1
24	1PPC	1" PIPE PLUG CARBON	1
23	FTS-1X8-C-ZP	Full Thread Stud,1"-8x8"L	1
22	.375SQW	.375" X 2" X 2.5" SQUARE WAS	10
21	1HCC	1" HALF COUPLING CARBON 3000	1
20	.50HCC	Coupler,Half,.50",3000 class	1
19	.25HCC	Coupler,Half,.25",3000 class	2
18	.50PPC	1/2 PIPE PLUG CARBON	1
17	.25PPC	1/4 PIPE PLUG CARBON STEEL	2
16	REM	ROD END 7/8"-9 X 9",4140 All	10
15	ENM	EYE NUT 7/8-9,C1045	10
14	CB26LB	O Ring,Buna,LR6/C26	1
13	BT-LR-2-SR-S	Basket,LR Style,#2,9/64"Perf	6 Not Shown
12	.75NLN	.75-10 NYLON LOCK NUT ZINC P	10
11	.75HB	.75-10 X 3.5" GR5 HEX HEAD S	10
10	3ANG.375C	3"X3" ANGLE 3/8" A36 CARBN 2	111.75
9	4P-SCH40-C	Pipe,4",Sch.40,SA53-B,Type E	40.19
8	.375X2HRC	3/8" X 2" SA36 HR CARBON 20'	10.5
7	PL-C-142	Plate Tab,.25" x 1",SA-36	7
6	HN-1-2H-PF	Hex Nut,1"-8,2H,Plain Finish	1
5	2628RTC.1875	Plate Roll & Tack,SA-36	1
4	PL-C-116	Plate,Donut,3"OD,1.75"ID	1
3	26H1F5-.1875	Head,F&D,26"OD,.1875"t	1
2	HD-26-C-102	Hold Down,MR,SA-36 or Equiv.	1
1	26HFC-.25-NB	HEAD,2:1 Elip,26"OD,.25"WT	1

MARK	QTY	SERVICE	SIZE	TYPE	WALL THICKNESS	WELD DETAIL	NUMBER	PURPOSE
N5	1	Outlet	4"	RFSO	150#	H, U		
N4	1	Drain	1"	NPT	3000#	B		
N3	1	Inlet	4"	RFSO	150#	H, U		
N2	2	Gauge	.25"	NPT	3000#	B		
N1	1	Vent	.5"	NPT	3000#	B	-	-

NOZZLE SCHEDULE — JIGS USED

APPROVALS		DATE
Approved By	-	-
Checked By	-	-
Drawn By	JS	6/21/13

FINISH INFO	
Prep Sandblast Interior:	SP 7 (Closure)
Prep Sandblast Exterior:	SP 7 (Closure)
Finish Sandblast Interior:	SP 7 (Rough)
Finish Sandblast Exterior:	SP 7 (Rough)
Paint Interior:	Black Epoxy
Paint Exterior:	Black Epoxy

DESIGN INFO	
M.A.W.P.:	150 psig @ 300° F
M.A.E.P.:	0
M.D.M.T.:	-20° F @ 150 psig
Hydro Test Pressure:	195 psig
Radiography:	None
Corrosion Allowance:	None
Weight:	-
Element:	(6) #2 Filter Bag

GENERAL TOLERANCES (unless otherwise noted)	
*	+/- .125" (Critical)
XX.XXXX	+/- .0625"
XX.XXX	+/- .125"
XX.XX	+/- .25"
XX.X	+/- .5"
ANGULAR TOLERANCE : 3°	

GENERAL NOTES

1) All dimensions are in inches unless otherwise noted
2) No heat treatment or impact testing.

PENTAIR
9449 South 550 West
Winamac, IN. 46996
Phone: 574-278-7161 / Fax: 574-278-7131

Part Number: LR6304FAC15

Dwg No. 2273 | Revision F

THIS DOCUMENT IS SOLELY THE PROPERTY OF PENTAIR. REPRODUCTION, USE DISCLOSURE, OR TRANSMISSION OF THIS DOCUMENT OR DETAILS CONTAINED HEREIN, IN PART OR IN WHOLE, IS PROHIBITED WITHOUT WRITTEN CONSENT OF PENTAIR ENGINEERING. THIS DOCUMENT AND ANY COPIES SHALL BE RETURNED TO PENTAIR UPON WRITTEN REQUEST.

Scale: Not to Scale | AutoCAD Format | Sheet 1 of 1

WARNING-SAFETY INFORMATION

1. The housings in this catalog, if improperly used, can cause serious injury or death
2. Always wear proper protective clothing for the liquid being filtered. Check your M.S.D.S. for any instructions or suggestions.
3. Do not run housing in excess of the rated pressure or temperature found on the housing tank label.
4. Check chemical compatibility of selected o-ring and housing material before housing installation.
5. Do not open housing when the system is under pressure; always relieve all pressure through housing before opening of housing lid.
6. *Stop all flow of liquid before opening of lid*.
7. Bolt housing to floor, as tipping may occur when lid is opened.

Do not operate over 150 PSI working pressure

MODEL **LR2**: maximum flow rate of **400** gallons per minute
MODEL **LR3**: maximum flow rate of **600** gallons per minute
MODEL **LR4**: maximum flow rate of **800** gallons per minute
MODEL **LR6**: maximum flow rate of **1200** gallons per minute
MODEL **LR8**: maximum flow rate of **1600** gallons per minute
MODEL **LR12**: maximum flow rate of **2000** gallons per minute
MODEL **LR17**: maximum flow rate of **3500** gallons per minute

RECEIVING INSTRUCTIONS:

1. Uncrate the housing(s) and discard any shipping materials
2. Place housing in the desired location on a flat surface, securing the four support legs to the base.

INSTALLATION INSTRUCTIONS:

*** flow to the housing should be turned off***

1. Place housing on pipe connections
   a. N.P.T./Coupling style – We do not recommend using any type of liquid sealant due to contamination of the pipe that may occur.
   b. Flange style – put a small amount of clean, heavy oil on one side of the gaskets, place oiled side down onto existing flanges to hold gaskets.
2. Please note the labeling of the inlet and outlet connections for proper installation. Tighten housing with proper tension to seal housing onto existing pipe or flange. Note: housing has been factory pressure tested to assure a leak proof vessel. If leaking occurs, check for improper connections.
3. Remove lid from housing by turning eye nuts until loosened and swing them down. Using the Lid Lift Handle, swing the lid until full view of the inner housing area is gained.
4. Check inner housing and pipe connections for foreign material and discard any items that have entered during shipping or unpacking.
5. Make sure that the strainer baskets are pushed fully into housing grooves. If using a filter bag, seat bag fully into strainer basket to assure a leak-proof seal between bag and basket. For best results, bag should be fully extended into the basket.
6. Close lid and alternately tighten the eye nuts until lid is fully seated onto the O-ring gasket.
7. Housing is now ready for start-up.

START-UP OF HOUSING

1. Loosen vent plug to allow air to escape from housing.
2. Slowly open the inlet to gradually fill the housing body.
3. When housing body is full (liquid escapes from top vent), close the vent.
4. Open the outlet connection and fully open the inlet connection. Housing is now operating properly.

REMOVAL OF SPENT ELEMENT:

1. When the housing reaches your pre-determined differential pressure, stop flow to the housing and relieve housing pressure through housing drain. Remove enough liquid to show top of basket flange.
2. Loosen eye nuts on housing and, using the Lid Lift Handle, swing the lid to gain full access to the inside of housing.
3. If using a liquid bag, pull the element out of the basket and discard the element in accordance with any required local and federal laws.
4. Remove filter baskets and clean thoroughly.
5. Housing debris and sludge should be removed to prolong filter efficiencies.
6. Replace filter baskets and bags into housings as noted in Installation Instructions above.

RECOMMENDED MAINTENANCE:

Periodic checks should be made on all housing lid and basket o-rings to ensure no cuts or damage has incurred that would cause the housing not to seal. If housing parts become damaged or worn, replace immediately.

OPTIONAL REPLACEMENT PARTS LIST

CB*LB	Buna Lid O-ring
LLHM	Lid Lift Handle
ENM	Eye Nut
REM	Rod End
CBAM	Clevis Bolt Assembly
PER APPLICATION **	Filter Bags
PER APPLICATION **	Filter Basket

* Insert outside diameter of housing model #
** Full line of replacement bags and baskets are available

McCROMETER

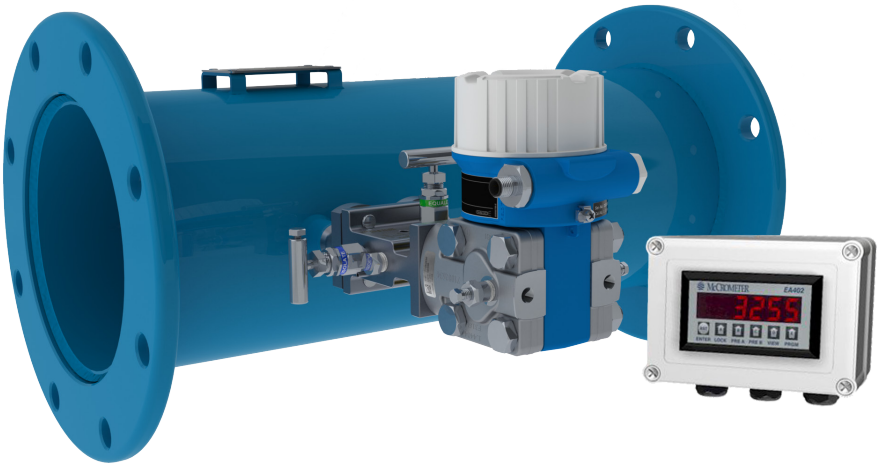

The VM V-Cone System Flow Meter . . .

Measurement Simplified.

The McCrometer VM V-Cone System flow meter is designed to make flow measurement easy!

- Small Footprint
- No Moving Parts
- For Hard-to-Fit Applications
- Designable Head Loss
- Ready to Install Right Out of the Box
- Self-Conditions Disturbed Flows
- Minimal Up or Downstream Piping Requirements

The VM V-Cone System flow meter keeps total cost of ownership where it should be...DOWN.

VM VCONE®

More than 70,000 V-Cones Installed Worldwide

25+ Years Experience

HIGH PERFORMANCE

The VM V-Cone flow meter offers great accuracy and repeatability, wide rangeability, installation flexibility and reduced maintenance in a compact all-in-one package.

ACCURACY YOU CAN COUNT ON

The key benefit to the VM V-Cone flow meter's unique design is its ability to provide reliable system accuracy of ±0.5% of rate over a 10:1 flow range under the most difficult flow conditions. Readings are precise and reliable, even under changing flow conditions and start/stop flows. The VM V-Cone is available for the following Municipal and Industrial applications:

- Well Water Production
- Raw Water Influent
- Filter and Pipe Galleries
- Finished Water Effluent
- Collection and Distribution Systems
- Facilities Distribution
- Cooling Water
- Reclaimed Water

SELF-CONDITIONS FLOW

The VM V-Cone flow meter's enhanced performance is due to the shape and positioning of the measuring element. The VM V-Cone flow meter's unique design centers the differential pressure cone centrally in the flow tube. This placement reshapes the flow profile, giving the V-Cone the smallest footprint of any in-line flow meter. This conditioned flow creates a low amplitude, high frequency signal that is accurate to ±0.5% of rate.

MAXIMUM INSTALLATION FLEXIBILITY

Due to its ability to accurately measure disturbed flow, the VM V-Cone flow meter doesn't require the same upstream or downstream straight pipe runs of many other flow meters. This key feature means the VM V-Cone flow meter can be installed virtually anywhere in a piping system or easily retrofitted into an existing piping layout. The result can be significant cost savings. It also means the VM V-Cone flow meter can fit almost anywhere other flow meters can't due to limited space or weight requirements.

LITTLE TO NO MAINTENANCE

The VM V-Cone System assures long-term performance because there are no moving parts to repair or replace. Once installed, the primary element rarely, if ever, needs to be removed from service. This leaves only the flow transmitter with the occasional recalibration over its lifetime. The V-Cone family of flow meters have a proven long life with installations exceeding 20 years without the need to be removed or re-calibrated.

PRE-PACKAGED, TESTED AND READY TO INSTALL

Start-Up and Commissioning are easy with the VM V-Cone Flow Meter. It comes wet flow calibrated and ready to install. All electronics come pre-programmed and ready to be powered and hooked into the SCADA, DCS or other control system, if desired.

FEATURES AND BENEFITS

- System accuracy of ±0.5% of rate
- Flow range: 10:1
- Installation: Typically 0-3 diameters upstream and 0-1 diameter downstream
- No parts to wear so little maintenance required
- HART® and Digital Protocols
- Totalizer pulse and linear 4-20mA outputs
- 3-way manifold for isolating the transmitter
- Displays both rate of flow and total flow
- Rate and total functions are independent of each other allowing for many different combinations of flow units

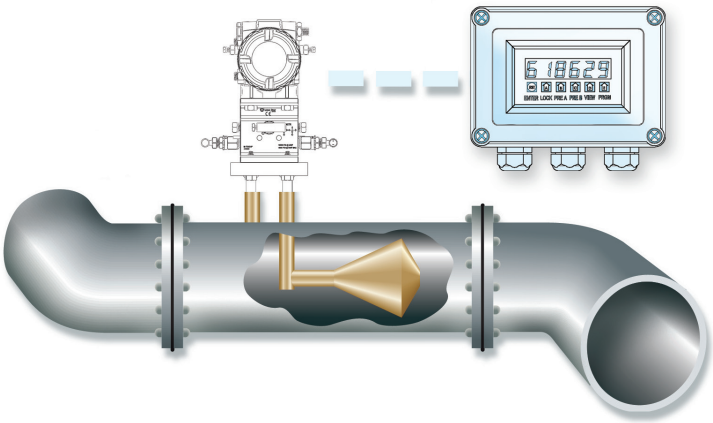

VM MODELS WITH 150psi AND 300psi PRESSURE RATING

PERFORMANCE

ACCURACY: ±0.5% of reading over standard flow range
RANGE: See dimensions chart below
HEAD LOSS: Typical ≤ 2 psi at Full Scale
MAXIMUM TEMPERATURE: (Standard Construction) 180°F constant
PRESSURE RATING: 150 psi
300 psi
POWER: 24VDC, Remote Display 110 VAC
OUTPUTS: Analog 4-20mA
OPTICALLY ISOLATED PULSE OUTPUT: For Remote Totalization
TRANSMITTER HOUSING: IP67
DISPLAY ENCLOSURE: NEMA 4X (IP66)

MATERIALS

Remote mount display includes 25 feet of power/signal cable. For additional length, please consult factory.

BODY
6-inch & larger: Fusion-bonded epoxy coated carbon steel
4-inch & smaller: All 304 stainless steel

MEASURING ELEMENT: 304 stainless steel
END CONNECTIONS
150#: 6-inch & larger: Carbon Steel AWWA Class D;
4-inch & smaller: Raised Face ANSI Class 150
300#: 6-inch and larger: Carbon Steel AWWA Class F;
4-inch & smaller: Raised Face ANSI Class 300

OPTIONS
- Other flange standards available
- Other laying lengths available

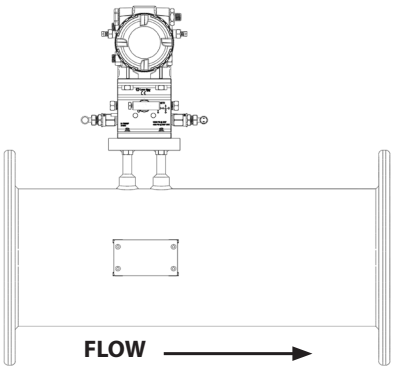

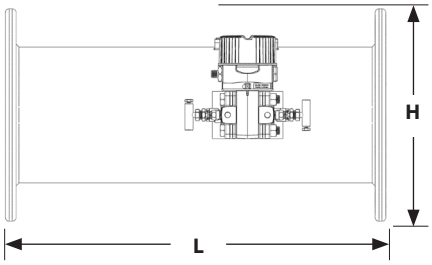

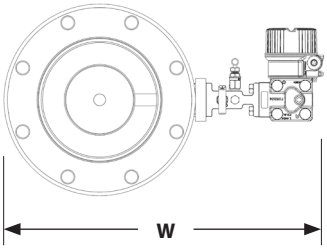

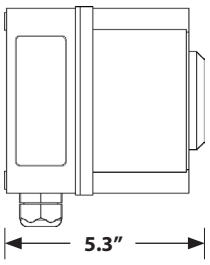

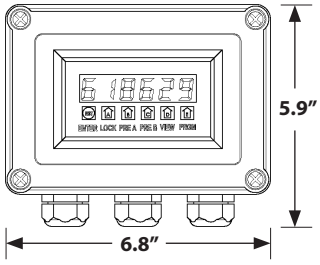

Remote Display w/ Enclosure

McCrometer reserves the right to change design specifications without notice.

FLOW RANGE CHART												
Size (in)	2	3	4	6	8	10	12	14	16	18	20	24
Applicable Standard Flow Ranges * (GPM)	10-230	20-500	40-900	80-1800	100-2250	120-2700	160-3750	200-4500	270-6000	300-7500	350-9000	560-14000
150#	**150#**											
Approx. Shipping Weight - lbs.	24	39	54	115	135	197	325	465	530	744	920	1254
W (width - inches)	15	16.5	17.75	20	22	24.5	27	28.5	30.75	32.5	34.75	39
H (height - inches)	14	15	13	14	15.4	16.6	19	21	23.5	25	27.5	32
L (length - inches)	12	14	16	22	26	28	30	30	30	32	36	48
No. of Bolts per Flange	4	4	8	8	8	12	12	12	16	16	20	20
300#	**300#**											
Approx. Shipping Weight - lbs.	29	44	90	145	220	340	430	650	820	1315	1517	1917
W (width - inches)	15.5	17	18.25	21	23	25.25	27.75	29.5	31.75	34	36.25	41
H (height - Inches)	15	16	13.8	15	16.3	17.5	20.5	23	25.5	28	30.5	36
L (length - inches)	12	14	16	22	26	28	30	30	30	32	36	48
No. of Bolts per Flange	8	8	8	12	12	16	16	20	20	24	24	24

* Meter will be 10:1 flow range standard (i.e. 400 to 40 GPM)

NOTE: Larger meter sizes, special laying lengths, other flow ranges available by special order.

The McCrometer Value Difference

For over 55 years, McCrometer has demonstrated an unyielding commitment to integrity which is reflected in our stringent flow meter calibration processes. Each flow meter is individually wet calibrated in one of our two world-class NIST traceable calibration facilities and delivered with a Certificate of Calibration.

NIST
National Institute of Standards and Technology

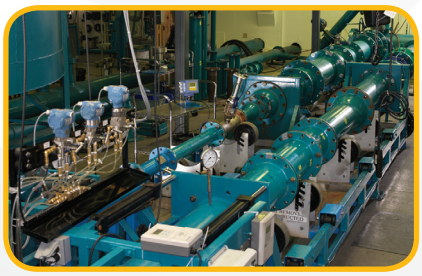

Our Hemet, California factory boasts a robust Calibration Test Lab that enables production of the most accurate and precise flow instrumentation. The test facility utilizes three gravimetric systems and two volumetric systems providing accuracy and calibration tests of flow meters from 1/2 to 20-inch diameter, with flow rates up to 4,000 gpm.

Our large volume test facility is located in Porterville, California. This facility is one of the world's larget volumetric test facilities owned by a meter manufacturer, and it offers accuracy and calibration tests of flow meters from 3 to 72-inch diameter, with flow rates up to 60,000 gpm.

REPRESENTED BY

McCROMETER

www.mccrometer.com
3255 West Stetson Avenue, Hemet, California 92545 USA
Phone 800-220-2279 | 951-652-6811 | Fax 951-652-3078

© 2014 by McCrometer, Inc.

Printed in USA

Lit Number 30121-51 Rev. 1.0/04-14

May be covered by one or more patents, including U.S. Patents 5,363,699 and 5,814,738 and counterparts outside the U.S.; other U.S. and foreign patents pending. V-Cone® is a registered trademark of McCrometer, Inc. HART® is a registered trademark of the HART Communication Foundation.

V2 System™
The Space Saver Solution

CONFIGURATION SHEET

MODEL V2150 / V2300

MAIN LINE FLOWMETER

DESCRIPTION

The V2 System's innovative design delivers repeatable accuracy of up to ±1% of rate over a 10:1 flow range under the most difficult flow conditions. The V2 System™ acts as its own flow conditioner, fully conditioning and mixing the flow prior to measurement. Readings are always precise and reliable, even under changing flow situations.
With this unique ability to self-condition flow, the V2 System virtually eliminates the need for upstream or downstream straight pipe runs. Thus, the V2 System can be installed virtually anywhere in a piping system or easily retrofit into an existing piping layout, resulting in significant installation flexibility and cost savings. In addition, the V2 System has proven to provide long-term performance with no moving parts to replace or maintain.

BENEFITS AND FEATURES

- Installs virtually anywhere in the system—even in tight spaces
- Displays both rate of flow and total flow. Rate and total functions are independent of each other allowing for many different combinations of flow units.
- Accuracy up to ±1% of rate
- Flow range: 10:1
- Installation: Typically 0-3 diameters upstream and 0-1 diameter downstream
- Totalizer pulse and linear 4-20 mAdc outputs
- No parts to wear so little maintenance required
- HART™ Interface
- 3-way manifold for isolating the transmitter

APPLICATIONS

Typical applications include:

- Water Well Production
- Cooling Water
- Raw Water Influent
- Reclaimed Water
- Finished Water Effluent
- Filter and Pipe Galleries
- Back Wash

Remote mounted display

3255 West Stetson Avenue
Hemet, CA 92545 USA
951-652-6811 / FAX 951-652-3078
Web Site: www.mccrometer.com

©2006 by McCrometer/Printed in USA
Lit#24509-01 Rev. 2.7/08-06

SPACE SAVER MODELS V2150 & V2300

PERFORMANCE

ACCURACY: Up to ±1% of reading over standard flowrange.
RANGE: See dimensions chart below
HEAD LOSS: Typical ≤2 psi at Full Scale
MAXIMUM TEMPERATURE: (Standard Construction) 180°F constant
PRESSURE RATING: Model V2150: 150 psi
Model V2300: 300 psi
POWER: 110 VAC, optional 24VDC
OUTPUTS: Analog 4-20mA
OPTICALLY ISOLATED PULSE OUTPUT For Remote Totalization
TRANSMITTER HOUSING & DISPLAY ENCLOSURE: NEMA 4X (IP66)

MATERIALS

Remote mount display includes 50 feet of power/signal cable. For additional length, please consult factory.
BODY: 6-inch & larger: Fusion-bonded epoxy coated carbon steel
4-inch: All 304 stainless steel
MEASURING ELEMENT: 304 stainless steel

END CONNECTIONS

V2150: 6-inch & larger: Carbon Steel AWWA Class D;
4-inch: Raised Face ANSI Class 150
V2300: 6-inch and larger: Carbon Steel AWWA Class F;
4-inch: Raised Face ANSI Class 300

OPTIONS

- Other flange standards available
- Other laying lengths available
- Transmitter may be mounted on either side of the flow tube

Instrument orientation
(Specified at time of order)

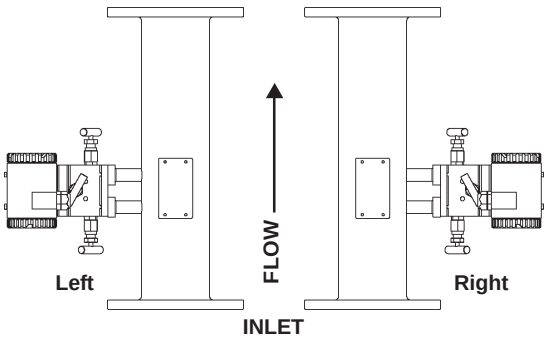

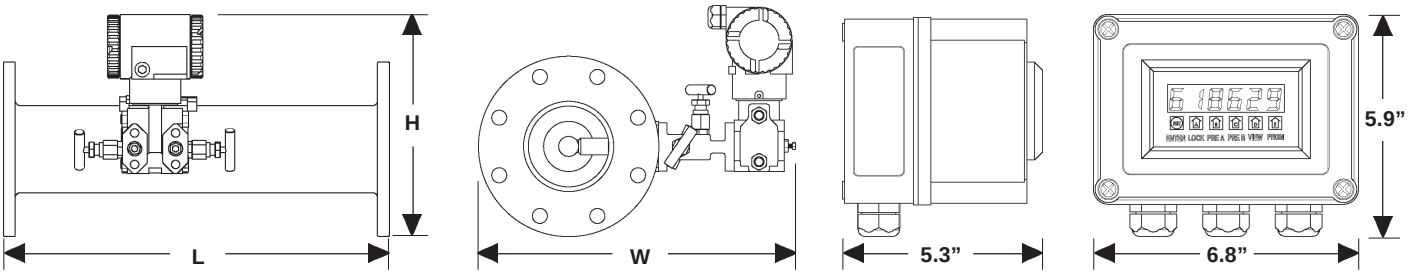

McCrometer reserves the right to change design specifications without notice.

Flow Computer

V2150 / V2300					DIMENSIONS				
Meter and Nominal Pipe Size		4	6	8	10	12	14	16	18
Standard Flow Ranges (GPM)	**A**	40-400	80-800	100-1000	120-1200	160-1600	200-2000	270-2700	300-3000
	B	60-600	120- 1200	150-1500	180-1800	250-2500	300-3000	400-4000	500-5000
	C	90-900	180-1800	225-2250	270-2700	375-3750	450-4500	600-6000	750-7500
V2150					**V2150**				
Approx. Shipping Weight - lbs.		54	115	135	197	325	465	530	744
W (width - inches)		17.75	20	22	24.5	27	28.5	30.75	32.5
H (height - inches)		13	14	15.4	16.6	19	21	23.5	25
L (length - inches)		20	28	34	38	42	44	46	50
No. of Bolts per Flange		8	8	8	12	12	12	16	16
V2300					**V2300**				
Approx. Shipping Weight - lbs.		90	145	220	340	430	650	820	1315
W (width - inches)		18.25	21	23	25.25	27.75	29.5	31.75	34
H (height - inches)		13.8	15	16.3	17.5	20.5	23	25.5	28
L (length - inches)		20	28	34	38	42	44	46	50
No. of Bolts per Flange		8	12	12	16	16	20	20	24

Note: *Larger meter sizes, special laying lengths, other flow ranges available by special order.*

ORDERING INFORMATION:
1. Select Nominal Pipe Size and one of the standard flow ranges A, B, or C.
2. Specify Instrument Orientation – Viewed from the inlet end of the meter, will the instrument(s) be on the right or left?
3. Specify units of measurement for both the flowrate indicator and totalizer.
4. For vertical installation, specify upflow or downflow.

3255 West Stetson Avenue • Hemet, CA 92545 USA
951-652-6811 / FAX 951-652-3078 • Web Site: www.mccrometer.com

©2006 by McCrometer/Printed in USA
Lit#24509-01 Rev. 2.7/08-06

Final Inspection Checklist

Serial Number:	15-1022
Job Reference:	518506

✓ Meter Body Construction

- Tube Type / Rating
- Tube Material
- Tube Internal Diameter
- Flange Material
- Flanges Parallel
- Face-to-Face Dimension
- Cone Type
- Cone Material
- Cone Centered
- Pressure Ports Free of Burrs
- Fitting Threads Clean
- Name Plate
- Flow Arrow

✓ Standard Technical Documentation

- V-Cone Application Sizing
- Materials Of Construction Report
- Warranty Card

✓ Optional Technical Documentation

- ☑ Calibration Test Report
- ☐ Hydrostatic Pressure Test
- ☐ Dye Penetrant Examination
- ☐ X-Ray Examination
- ☐ Magnetic Particle Examination
- ☐ Certified Mill Test Reports (CMTR's)

Inspected By: PS

Date: 5/20/15

McCROMETER

V-Cone® Application Sizing

Serial #	15-1022	Fluid	WATER
Tag		Fluid State	LIQUID
P.O. Ref.	518506	End User	
Model	VM04QE03F-E1HS-V3	Market	
		Application	
		Mark/App Code	

Description	4" VM meter
Note	

C_d	0.8104	
P_f	175	psiG
T_f	70	°F
ρ	62.18	lb/ft3
μ	0.9957	cP
G		
Z		
Y		
k		
C_P		
Mw	18.015	
P_b		
T_b		
Z_b		
P_{atm}	14.696	psi
P_c	3198.8	psi
T_c	705.16	°F
F_a	1.000	
aPE	D 6.7e-06	d 6.7e-06
P_v	0.3633	psi
P_{loss}	1.655	psi

⇐ Entered value.

q	max. Flowrate	400	GPM
Re	max. Reynolds	3.138e+05	
V	max. Velocity	10.05	fps
ΔP	max. Dp	102.77	inWC
ΔP	min. Dp	1.0277	inWC
D	Meter I.D.	4.0330	in
d	Cone O.D.	2.9460	in
β	Beta Ratio	0.6829	
	Turn Down	10	

McCrometer Eng. MaBa

	Re	Cd	Velocity fps	Gas. Exp. Y	ΔP inWC	Flowrate GPM
1	3.138e+05	0.8104	10.05		102.77	400.00
2	2.824e+05	0.8104	9.041		83.243	360.00
3	2.510e+05	0.8104	8.037		65.772	320.00
4	2.196e+05	0.8104	7.032		50.358	280.00
5	1.883e+05	0.8104	6.028		36.997	240.00
6	1.569e+05	0.8104	5.023		25.693	200.00
7	1.255e+05	0.8104	4.018		16.443	160.00
8	9.413e+04	0.8104	3.014		9.2492	120.00
9	6.275e+04	0.8104	2.009		4.1109	80.000
10	3.138e+04	0.8104	1.005		1.0277	40.000

Table based on one flow condition (P, T ,Z , k ...) V40 Version 2.0

Record Start Date	3/31/2015
Print Date	04-17-2015

McCROMETER

McCROMETER

V-Cone Calibration Report

Serial Number: 15-1022

Test Number: 15-1022

Model: VM04QE03F-E1HS-V3

Calibration Date: 4/16/2015

Report Date: 4/16/2015

Sold To: Null

Description: 4" VM meter

Notes:

Inside Diameter (in): 4.033

Beta Ratio: 0.6829

Cone Outside Diameter (in): 2.946

Average Cf: 0.8104

Calibration Report

	Reynolds Number Interval:	SLBF Cf:
1	321718 - 293593	0.8104
2	293593 - 265468	0.8104
3	265468 - 237343	0.8104
4	237343 - 209218	0.8104
5	209218 - 181093	0.8104
6	181093 - 152968	0.8104
7	152968 - 124843	0.8104
8	124843 - 96718	0.8104
9	96718 - 68593	0.8104
10	68593 - 40468	0.8104

Approved By: Luis Leon Pacheco

Luis Leon Pacheco

Test Fluid: Water

Test Stand Instrumentation Traceability Kit Number: V0117

Standard Used: Primary

Test Data

	Water Temperature (°C)	Test Time (seconds)	Collected Mass (kilograms)	Air Temperature (°C)	Barometric Pressure (kPa)	Relative Humidity (%)	Differential Pressure (kPa)	Rate of Flow Reference (m^3/sec)	Reynolds Number ($\times^1/_{1000}$)	Combined Uncertainty (%) at 95% confidence
1	26.00	33.704	760.904	21.68	96.19	52.29	20.6982	0.02261	322	0.15
2	26.00	42.462	746.830	21.68	96.19	52.29	12.4438	0.01761	251	0.15
3	25.90	54.495	730.940	21.68	96.19	52.29	7.2237	0.01343	191	0.15
4	26.00	97.216	710.964	21.68	96.19	52.29	2.1557	0.00732	104	0.15
5	26.00	243.815	692.350	21.68	96.19	52.29	0.3278	0.00284	40	0.15

This calibration was performed using standards traceable to the National Institute of Standards and Technology (NIST), USA. Certificates of traceability for the individual test measurements listed in this report are documented and serialized by the Test Stand Instrumentation Traceability Kit Number identified above and are available upon request. Combined Uncertainty to a 95% confidence level is developed for each test point according to the methods described in the ANSI/NCSL Z540-2-1997. Methods and procedures used in this calibration are in accordance with the McCrometer Flow Laboratory Technical Manual, revision 2.0.

McCrometer, Inc. • 3255 West Stetson Avenue, Hemet, CA 92545, USA
Tel (951) 652-6811 • Fax (951) 652-3078 • Website: http://www.mccrometer.com
Hours: 8am - 4:30pm PST, Monday – Friday

McCROMETER CONFIGURATION SHEET

MODEL DP141-200-02 **Differential Pressure Transmitter**

V-CONE®

V-Cone Model Number: VM04QE03F-E1HS-V3
V-Cone Serial Number: 15-1022
V-Cone Tag:

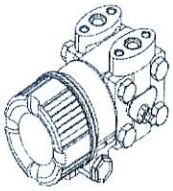

Description: DIFFERENTIAL PRESSURE TRANSMITTER
Manufacturer: Endress + Hauser
Model Number: DP141-200-02
Serial Number: E15-01717
Factory Range: 0 to 200 in WC

☐ Linear Output ☑ Square Root Output

Configuration Data:

Pressure (in WC)	Flow Rate (GPM)	Output (mA)
0	0	4.0
102.77	400.00	20.0

Date: 4/21/2015

Configured by: Certified by:

3255 West Stetson Ave., Hemet, CA 92545-7799 USA -- Phone (951)652-6811 / FAX (951)652-3078
Web Site: http://www.mccrometer.com

Materials of Construction Report

Serial Number: 15-1022

Job Number: 518506

Tracking Number	Item Number	Heat Number	Description
50005	x6084-00	3t998	PIPE .25" S80 S304/L SMLS *
52124	x6564	140307t02	PIPE 4" S40 S304/L SMLS *1,267
52307	x6127-00	n3x9	BAR RND 3" S304/L *1,267 (MK)
52818	X6859	265222	BAR FLT 0.75" X 3" S316/L *
53109	x6575	f6b4	BAR RND 1.315" S316/L *1,267
53390	f1943	el704	FLG 4" 150# RF SO A182 S304/L*

Notes:
1. The serial number listed at the top of this page should be used to reference this document.
2. Tracking Number - This number is used to track each material receipt.

Final Inspection Checklist

Serial Number:	15-1023
Job Reference:	518505

✓ Meter Body Construction

- Tube Type / Rating
- Tube Material
- Tube Internal Diameter
- Flange Material
- Flanges Parallel
- Face-to-Face Dimension
- Cone Type
- Cone Material
- Cone Centered
- Pressure Ports Free of Burrs
- Fitting Threads Clean
- Name Plate
- Flow Arrow

✓ Standard Technical Documentation

- V-Cone Application Sizing
- Materials Of Construction Report
- Warranty Card

✓ Optional Technical Documentation

- ☑ Calibration Test Report
- ☐ Hydrostatic Pressure Test
- ☐ Dye Penetrant Examination
- ☐ X-Ray Examination
- ☐ Magnetic Particle Examination
- ☐ Certified Mill Test Reports (CMTR's)

Inspected By: PS

Date: 5/20/15

McCROMETER

V-Cone® Application Sizing

Serial #	15-1023	Fluid	WATER
Tag		Fluid State	LIQUID
P.O. Ref.	518505	End User	
Model	VM04QE03F-E1HS-V3	Market	Mark/App Code
		Application	

Description	4" VM meter
Note	

C_d	0.8138	
P_f	175	psiG
T_f	70	°F
ρ	62.18	lb/ft3
μ	0.9957	cP
G		
Z		
Y		
k		
C_P		
Mw	18.015	
P_b		
T_b		
Z_b		
P_{atm}	14.696	psi
P_c	3198.8	psi
T_c	705.16	°F
F_a	1.000	
aPE	D 6.7e-06	d 6.7e-06
P_v	0.3633	psi
P_{loss}	1.642	psi

⇐ Entered value.

q	max. Flowrate	400	GPM
Re	max. Reynolds	3.138e+05	
V	max. Velocity	10.05	fps
ΔP	max. Dp	101.91	inWC
ΔP	min. Dp	1.0191	inWC
D	Meter I.D.	4.0330	in
d	Cone O.D.	2.9460	in
β	Beta Ratio	0.6829	
	Turn Down	10	

McCrometer Eng. MaBa

	Re	Cd	Velocity fps	Gas. Exp. Y	ΔP inWC	Flowrate GPM
1	3.138e+05	0.8138	10.05		101.91	400.00
2	2.824e+05	0.8138	9.041		82.550	360.00
3	2.510e+05	0.8138	8.037		65.224	320.00
4	2.196e+05	0.8138	7.032		49.937	280.00
5	1.883e+05	0.8138	6.028		36.689	240.00
6	1.569e+05	0.8138	5.023		25.479	200.00
7	1.255e+05	0.8138	4.018		16.306	160.00
8	9.413e+04	0.8138	3.014		9.1723	120.00
9	6.275e+04	0.8138	2.009		4.0764	80.000
10	3.138e+04	0.8138	1.005		1.0191	40.000

Table based on one flow condition (P, T ,Z , k ...) V40 Version 2.0

Record Start Date	3/31/2015
Print Date	04-17-2015

McCROMETER

McCROMETER

V-Cone Calibration Report

Serial Number: 15-1023

Test Number: 15-1023

Model: VM04QE03F-E1HS-V3

Calibration Date: 4/16/2015

Report Date: 4/16/2015

Sold To: Null

Description: 4" VM meter

Notes:

Inside Diameter (in): 4.033

Beta Ratio: 0.6829

Cone Outside Diameter (in): 2.946

Average Cf: 0.8138

Calibration Report

	Reynolds Number Interval:	SLBF Cf:
1	325986 - 297669	0.8151
2	297669 - 269352	0.8150
3	269352 - 241035	0.8149
4	241035 - 212718	0.8147
5	212718 - 184401	0.8145
6	184401 - 156084	0.8142
7	156084 - 127767	0.8138
8	127767 - 99450	0.8132
9	99450 - 71133	0.8123
10	71133 - 42816	0.8102

Approved By: Luis Leon Pacheco

Luis Leon Pacheco

Test Fluid: Water

Test Stand Instrumentation Traceability Kit Number: V0117

Standard Used: Primary

Test Data

	Water Temperature (°C)	Test Time (seconds)	Collected Mass (kilograms)	Air Temperature (°C)	Barometric Pressure (kPa)	Relative Humidity (%)	Differential Pressure (kPa)	Rate of Flow Reference (m^3/sec)	Reynolds Number ($\times^1/_{1000}$)	Combined Uncertainty (%) at 95% confidence
1	26.00	33.502	765.898	21.68	96.19	52.29	20.8676	0.02289	326	0.15
2	25.90	42.125	744.560	21.68	96.19	52.29	12.4704	0.01770	252	0.15
3	25.90	54.443	729.578	21.68	96.19	52.29	7.1756	0.01342	191	0.15
4	25.90	95.258	712.326	21.68	96.19	52.29	2.2426	0.00749	106	0.15
5	25.90	230.566	693.258	21.68	96.19	52.29	0.3674	0.00301	43	0.15

This calibration was performed using standards traceable to the National Institute of Standards and Technology (NIST), USA. Certificates of traceability for the individual test measurements listed in this report are documented and serialized by the Test Stand Instrumentation Traceability Kit Number identified above and are available upon request. Combined Uncertainty to a 95% confidence level is developed for each test point according to the methods described in the ANSI/NCSL Z540-2-1997. Methods and procedures used in this calibration are in accordance with the McCrometer Flow Laboratory Technical Manual, revision 2.0.

McCrometer, Inc. • 3255 West Stetson Avenue, Hemet, CA 92545, USA
Tel (951) 652-6811 • Fax (951) 652-3078 • Website: http://www.mccrometer.com
Hours: 8am - 4:30pm PST, Monday – Friday

McCROMETER CONFIGURATION SHEET

MODEL **DP141-200-02** **Differential Pressure Transmitter**

V CONE®

V-Cone Model Number: VM04QE03F-E1HS-V3
V-Cone Serial Number: 15-1023
V-Cone Tag:

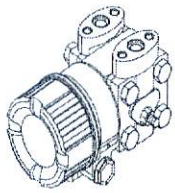

Description: DIFFERENTIAL PRESSURE TRANSMITTER
Manufacturer: Endress + Hauser
Model Number: DP141-200-02
Serial Number: E15-01718
Factory Range: 0 to 200 in WC

☐ Linear Output ☑ Square Root Output

Configuration Data:

Pressure (in WC)	Flow Rate (GPM)	Output (mA)
0	0	4.0
101.91	400.00	20.0

Date: 4/21/2015

Configured by: Certified by:

3255 West Stetson Ave., Hemet, CA 92545-7799 USA -- Phone (951)652-6811 / FAX (951)652-3078
Web Site: http://www.mccrometer.com

Materials of Construction Report

Serial Number: 15-1023

Job Number: 518505

Tracking Number	Item Number	Heat Number	Description
50005	x6084-00	3t998	PIPE .25" S80 S304/L SMLS *
52124	x6564	140307t02	PIPE 4" S40 S304/L SMLS *1,267
52307	x6127-00	n3x9	BAR RND 3" S304/L *1,267 (MK)
52818	X6859	265222	BAR FLT 0.75" X 3" S316/L *
53109	x6575	f6b4	BAR RND 1.315" S316/L *1,267
53279	f1943	el502	FLG 4" 150# RF SO A182 S304/L*

Notes:
1. The serial number listed at the top of this page should be used to reference this document.
2. Tracking Number - This number is used to track each material receipt.

McCROMETER

Flow
Measurement
Solutions
for Water &
Waste Water

VCONE

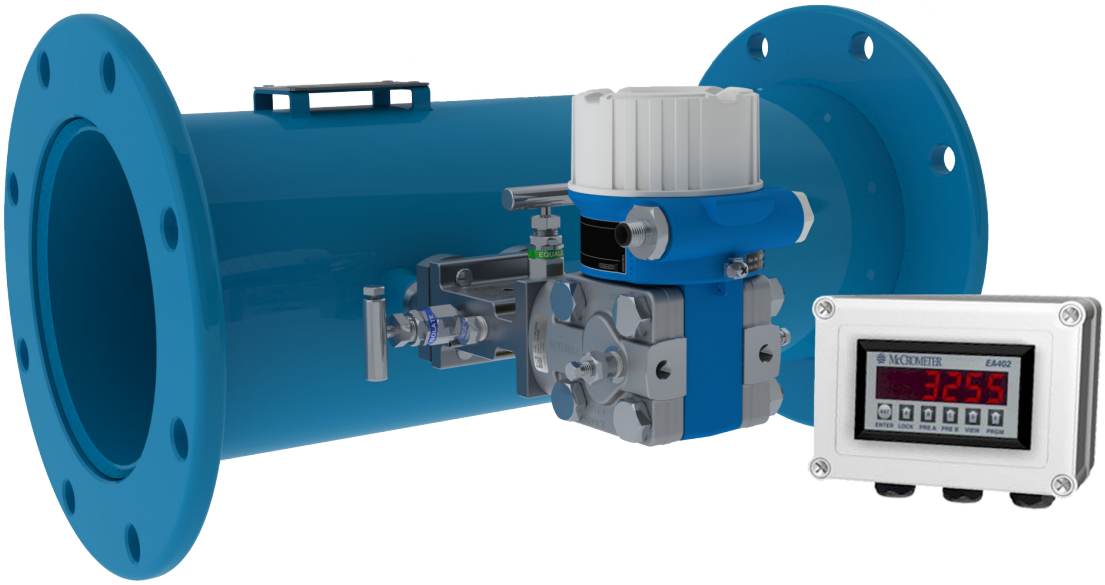

INSTALLATION OPERATION & MAINTENANCE MANUAL

Table of Contents

SECTION 1 - INTRODUCTION

Specifications 2
Dimensions 2
Flow Ranges 2

SECTION 2 - INSTALLATION

Flow Tube Installation - Direct Mount 3
Flow Tube Installation - Remote Mount 4
Upstream Piping 5
Remote Flow Indicator Installation 5
Wiring - Local Display 6
Wiring - Remote Display 6

SECTION 3 - START UP

Purging the System 7
Zeroing Local Display 7
Zeroing Remote Display 8

SECTION 4 - TROUBLESHOOTING

Changes in Flow Accuracy or Meter Operation: Tube 9
No Change in Flow Measurement or Flow Reading Inaccuracy: 3-Way Valve Manifold 9
Inaccurate or Erratic Flow Readings: Flow Transmitter 9
Inaccurate or Erratic Flow Readings: Flow Indicator 9

PARTS

Parts Identification 10

CONTACT INFORMATION 11

MANUFACTURER'S WARRANTY 12

Copyright © 2014 McCrometer, Inc. All printed material should not be changed or altered without permission of McCrometer. Any published technical data and instructions are subject to change without notice. Contact your McCrometer representative for current technical data and instructions.

McCROMETER

3255 WEST STETSON AVENUE • HEMET, CALIFORNIA 92545 USA
TEL: 951-652-6811 • 800-220-2279 • FAX: 951-652-3078

www.mccrometer.com
Printed In The U.S.A.
Lit. # 30121-60 Rev. 1.0/04-14

SECTION 1 - INTRODUCTION

The VM V-Cone Water and Waste Water Flow Meter System consists of a flanged Flow Tube, Flow Transmitter and Flow Indicator. The Flow Transmitter detects flow and transmits a 4-20mA signal proportional to the flow rate. The Flow Indicator converts the signal into a flow Rate and Total, displayed on an LED display. The flow indicator is either integrated to the flow transmitter or remote mounted from the meter body. The Flow Indicator outputs an auxiliary 4-20 mA signal and an open collector transistor alarm pulse assignable to Rate or Total. A 3-way-valve isolation manifold is standard.

PERFORMANCE

ACCURACY: ±0.5% of reading over standard flowrange
RANGE: See dimensions chart below
HEAD LOSS: Typical ≤ 2 psi at Full Scale
MAXIMUM TEMPERATURE: (Standard Construction) 180°F constant
PRESSURE RATING: 150 psi
300 psi
POWER: 24VDC, Remote Display 110 VAC
OUTPUTS: Analog 4-20mA
OPTICALLY ISOLATED PULSE OUTPUT for Remote Totalization
TRANSMITTER HOUSING & DISPLAY ENCLOSURE: NEMA 4X (IP66)

MATERIALS

Remote mount display includes 25 feet of power/signal cable. For additional length, please consult factory.
BODY: 6-inch & larger: Fusion-bonded epoxy coated carbon steel
4-inch & smaller: All 304 stainless steel
MEASURING ELEMENT: 304 stainless steel

END CONNECTIONS

150#: 6-inch & larger: Carbon Steel AWWA Class D;
4-inch & smaller: Raised Face ANSI Class 150
300#: 6-inch & larger: Carbon Steel AWWA Class F;
4-inch & smaller: Raised Face ANSI Class 300

OPTIONS

- Other flange standards available
- Other laying lengths available

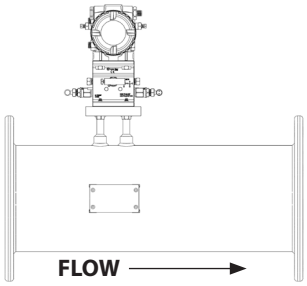

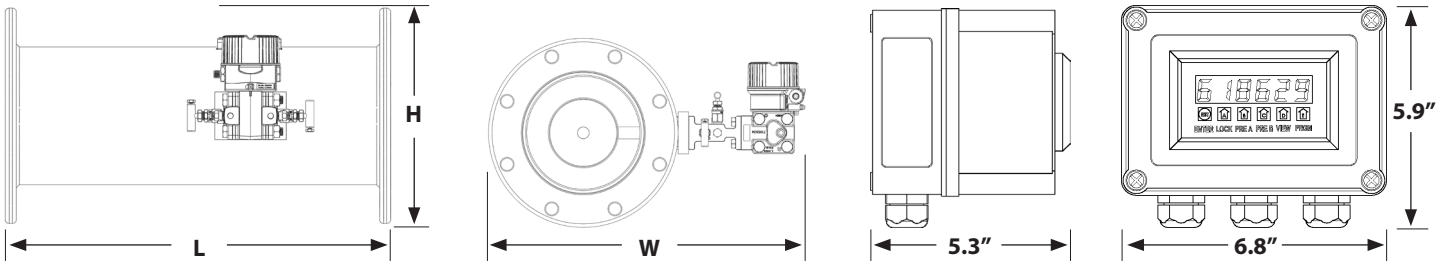

Remote Display w/ Enclosure

McCrometer reserves the right to change design specifications without notice.

Flow Range Chart												
Size (in)	2	3	4	6	8	10	12	14	16	18	20	24
Applicable Standard Flow Ranges * (GPM)	10-230	20-500	40-900	80-1800	100-2250	120-2700	160-3750	200-4500	270-6000	300-7500	350-9000	560-14000
150#							**150#**					
Approx. Shipping Weight - lbs.	24	39	54	115	135	197	325	465	530	744	920	1254
W (width - inches)	15	16.5	17.75	20	22	24.5	27	28.5	30.75	32.5	34.75	39
H (height - inches)	14	15	13	14	15.4	16.6	19	21	23.5	25	27.5	32
L (length - inches)	12	14	16	22	26	28	30	30	30	32	36	48
No. of Bolts per Flange	4	4	8	8	8	12	12	12	16	16	20	20
300#							**300#**					
Approx. Shipping Weight - lbs.	29	44	90	145	220	340	430	650	820	1315	1517	1917
W (width - inches)	15.5	17	18.25	21	23	25.25	27.75	29.5	31.75	34	36.25	41
H (height - Inches)	15	16	13.8	15	16.3	17.5	20.5	23	25.5	28	30.5	36
L (length - inches)	12	14	16	22	26	28	30	30	30	32	36	48
No. of Bolts per Flange	8	8	8	12	12	16	16	20	20	24	24	24

* Meter will be 10:1 flow range standard (i.e. 400 to 40 GPM)
NOTE: Larger meter sizes, special laying lengths, other flow ranges available by special order.

SECTION 2 - INSTALLATION

WARNING!
SERIOUS INJURY CAN RESULT FROM WORKING ON A LINE UNDER PRESSURE. Shut off the water and relieve the pressure from the line before attemping to install, remove or service the flow tube and/or the 3-way-valve manifold.

FLOW TUBE INSTALLATION - DIRECT MOUNT

1. Provide an adequate opening for the flow tube and gaskets. Allow enough room around the flow tube to access the instrumentation. Use only installation hardware that is appropriate for the process fluid, temperature and pressure.

2. Match the flow tube direction with the system flow - a Flow Direction Arrow is indicated on the flow tube Data Plate.

(Transmitter removed for clarity)

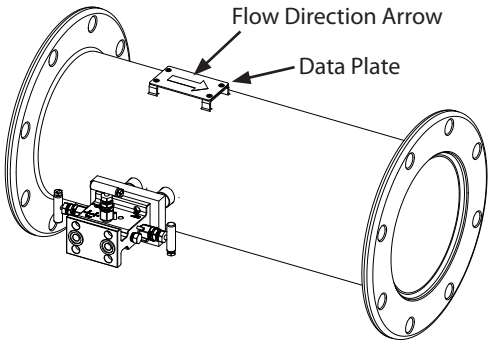

3. The meter body is always installed with the **Transmitter** connections on the side of the meter body kept in a horizontal orientation (see below).

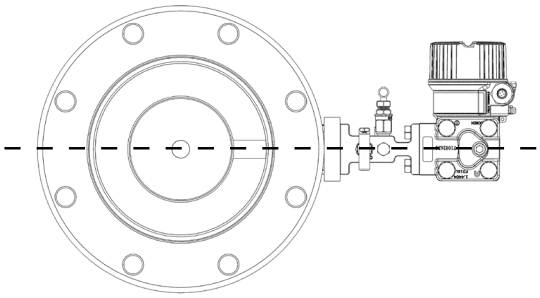

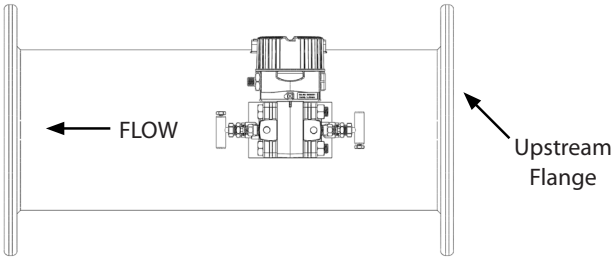

HORIZONTAL FLOW

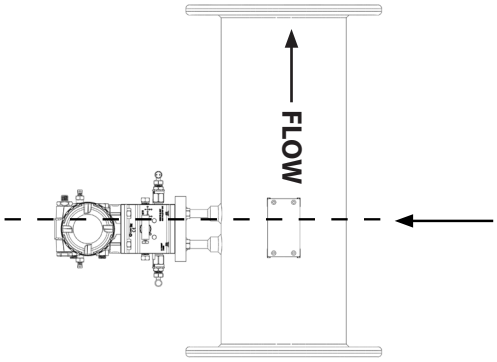

Transmitter connections must be horizontal

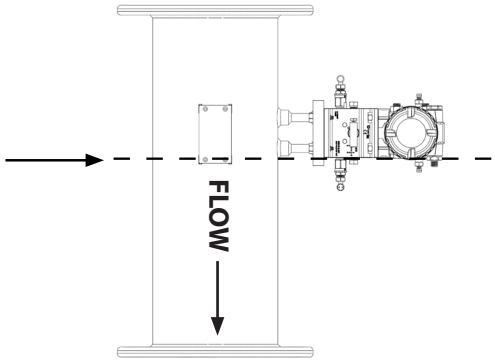

UPFLOW **DOWNFLOW**

VERTICAL FLOW

4. Direct mount transmitters can be used in vertical down applications when there is no entrained air. They can also be used in vertical up if there is no debris.

SECTION 2 - INSTALLATION (continued)

FLOW TUBE INSTALLATION - REMOTE MOUNT TRANSMITTER

1. The pressure taps shall be between horizontal centerline and 60˚ below centerline (3 o'clock to 5o o'clock or 7 o'clock to 9 o'clock). Taps at bottom dead-center may accumulate solids if they are present in the liquid; taps above the centerline will accumulate air or non-condensing gases. In neither case should the taps be more than 60˚ to the horizontal plane.

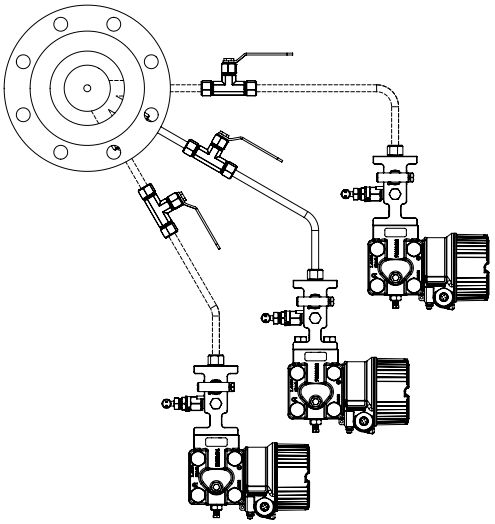

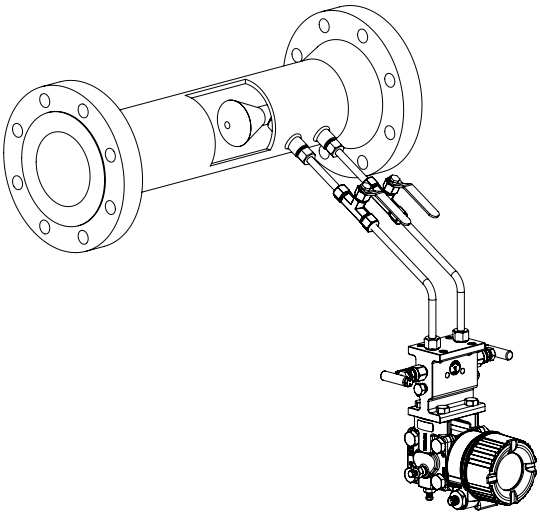

2. In vertical applications with entrained air or debris, it is recommended to use wall taps (Process Connection W must be selected). It is always best to install the transmitter below the pressure taps.

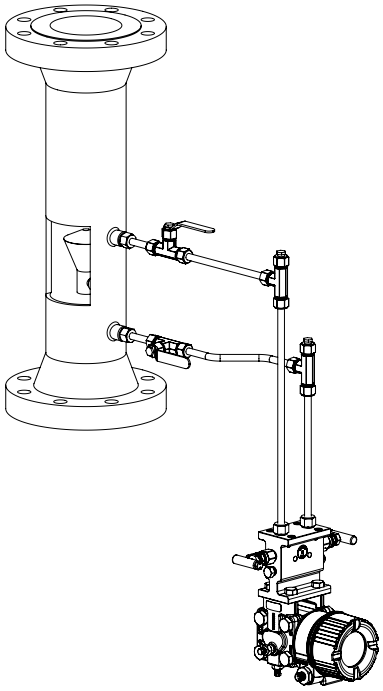

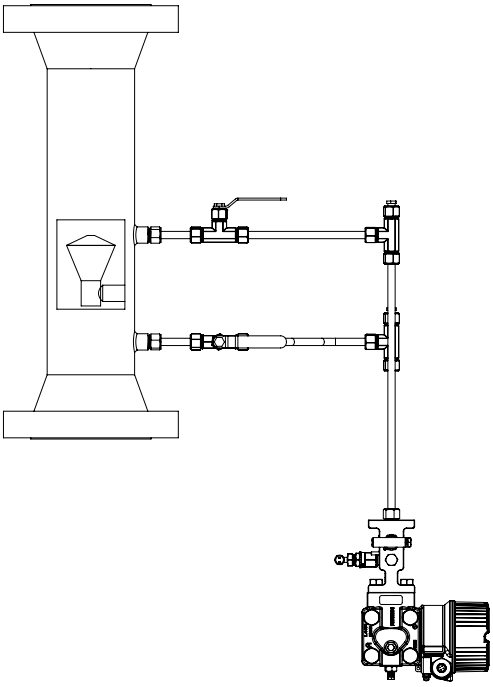

SECTION 2 - INSTALLATION (continued)

UPSTREAM PIPING

Some flow meter installations require longer upstream runs of straight pipe to lessen the effects of upstream turbulence. Turbulence can be caused by a variety of upstream conditions. Proper upstream straight pipe lengths (dimension D, below) will ensure accuracte flow measurement. Refer to the guide below for recommended upstream runs of straight pipe.

ACCEPTABLE DIRECT UPSTREAM PIPE CONNECTIONS

- Transitions from upstream pipe (schedules 10 to 80)
- Single Elbows
- Double Elbows
- Fully open Gate Valve
- Transitions from pipe inside diameters smaller than schedule 80; typically concrete lined pipe

PROVIDE UP TO 3 DIAMETERS UPSTREAM STRAIGHT PIPE IF ANY OF THESE CONDITIONS EXIST:

- Pumps
- Butterfly Valves
- Partially open Gate Valves
- Check Valves
- Strainers and Sand Separators

EXAMPLE: A 6" diameter meter with a butterfly valve upstream may need as much as 18" of straight pipe ("**D**") before the meter to ensure accuracy.

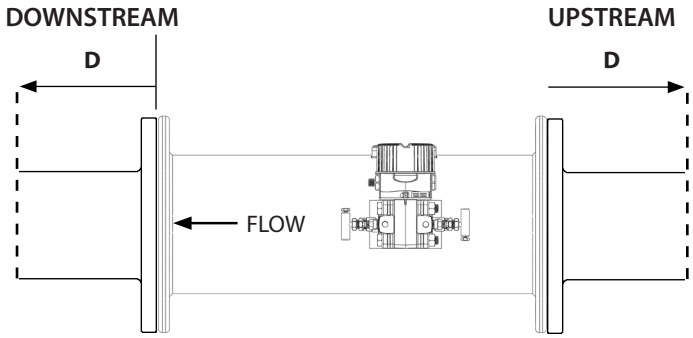

REMOTE FLOW INDICATOR INSTALLATION

Mount the Flow Indicator housing in a location that provides access, viewing, and it suitable for a NEMA 4X rated device. The Indicator is prewired to the Flow Meter Transmitter with 50 feet of cable for remote mounting. The housing mounting holes are located at the bottom of the indicator housing base, beneath the cover screws. *Not applicable for V-Cones with local flow indication.*

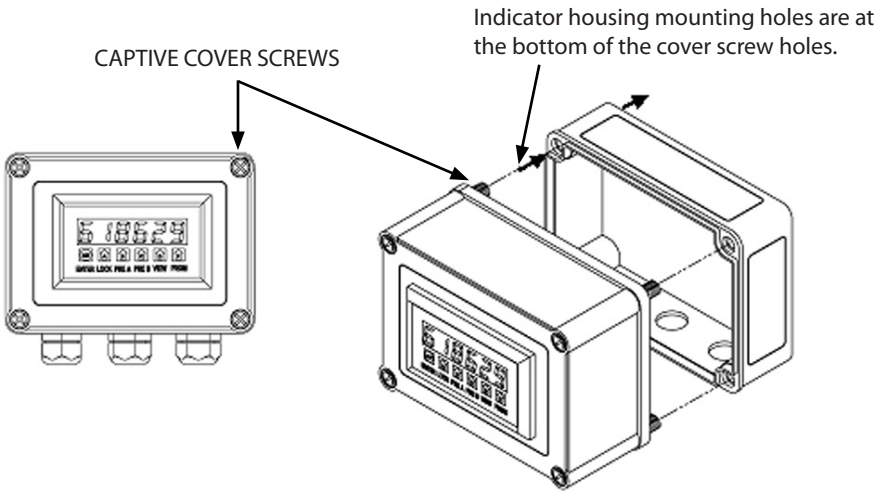

SECTION 2 - INSTALLATION (continued)

WIRING - LOCAL DISPLAY

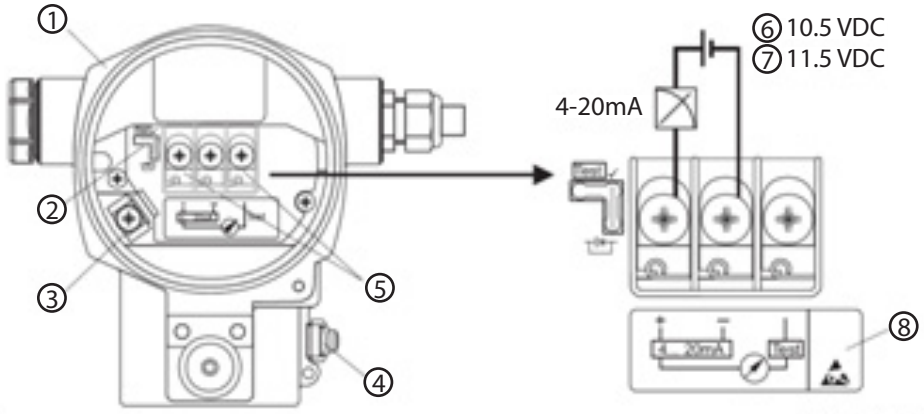

Electrical connection 4-20mA HART

1. Housing
2. Jumper for 4-20mA test signal
3. Internal ground terminal
4. External ground terminal
5. 4-20mA test signal between positve and test terminal
6. Minimum supply voltage = 10.5 VDC, jumper is set as illustrated in the diagram
7. Minimum supply voltage = 11.5 VDC, jumper is inserted in "Test" position
8. Devices with integrated overvoltage protection are labeled OVP (overvoltage protection)

WIRING - REMOTE DISPLAY

The flow meter is pre-wired to the Flow Indicator. The cable for the A/C power input should have an outside dimension (OD) at least as large as the provided cables to ensure proper sealing in the compression fitting.

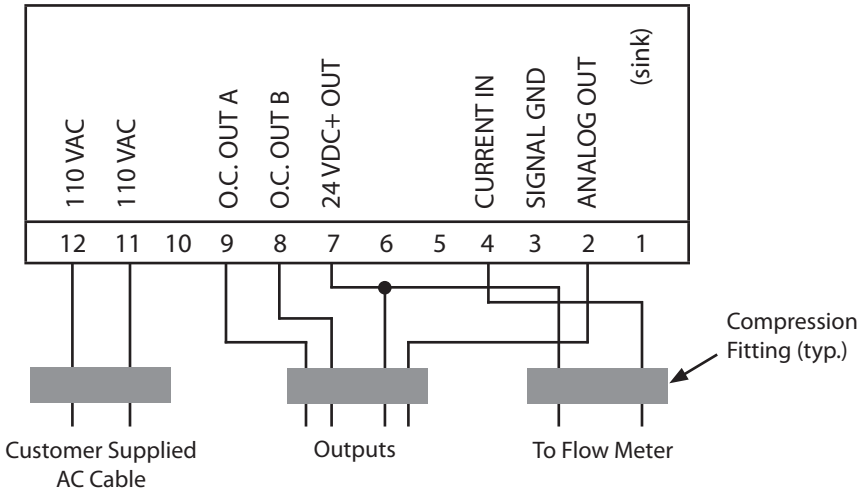

WIRE COLOR

FLOW METER

RED	(+)
BLACK	(-)
WHITE	(not used)
GREEN	(not used)

OUTPUTS

RED	Analog (+)	
BLACK	Signal Common (-)	Shared
WHITE	Preset A	
GREEN	Preset B	
BLACK	Signal Common (-)	Shared

INPUTS

110 VAC inputs are not polarized.

SECTION 3 - START UP

PURGING THE SYSTEM

1. Meter is shipped with valves in operating positions with both isolation valves open and cross valve closed.

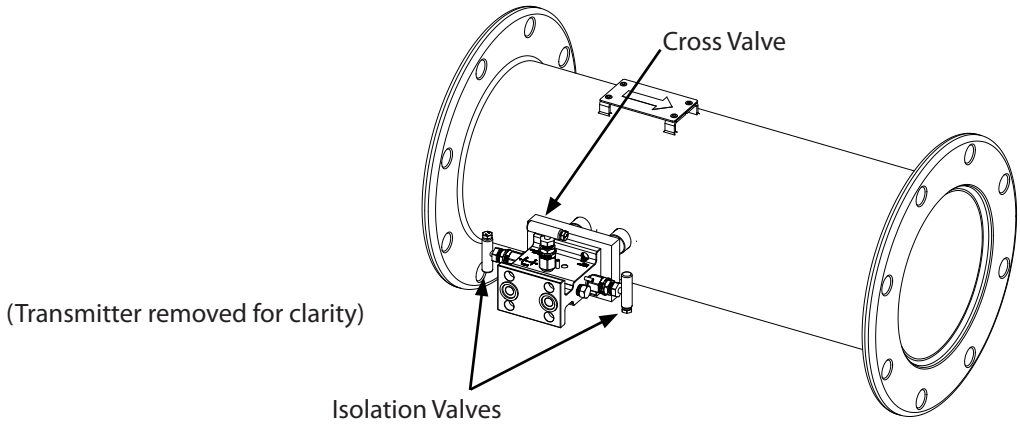

2. Start the flow. **Check all connections for leaks and correct as necessary before continuing.**

3. Open each vent screw (below) to purge any air from the system, and then close the vent screws.

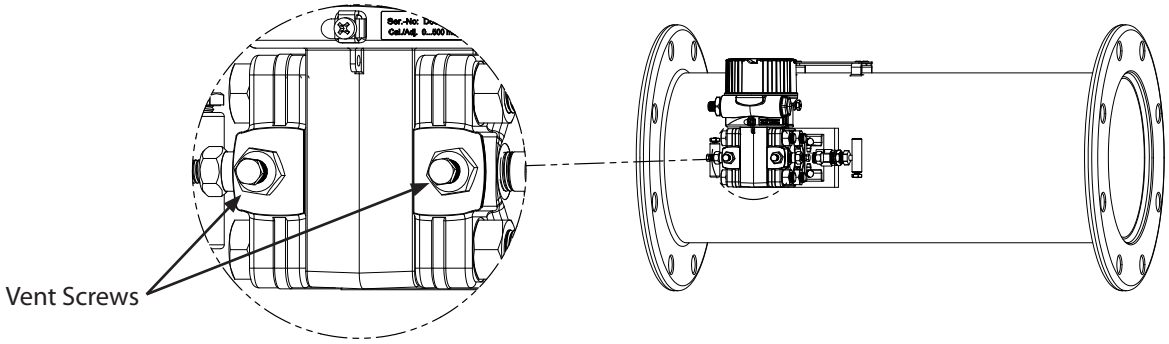

ZEROING LOCAL DISPLAY
(display on transmitter)

1. Close both isolation valves and open the cross over (equalizing) valve.
2. Remove the cap over the LCD display.
3. Press the enter key.
4. Press the up or down key until "Setup" is highlighted.
5. Press the enter key.
6. Press the up or down key until "Pos. zero adjust" is highlighted.
7. Press the enter key.
8. Press the down key and highlight "confirm".
9. Press the enter key
10. To return to operating mode press the up and down keys at the same time. Do this until you are in run mode.
11. Return the valves to operating positions. Both isolation valves open and cross over (equalizing) valve closed.

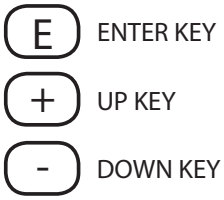

ZEROING REMOTE DISPLAY
(no display on transmitter)

1. Close both isolation valves and open cross over (equalizing) valve.
2. Remove the cap.
3. Press and hold the zero button (See figure below, item #7). **DO NOT PRESS THE SPAN BUTTON.**
4. Return the valves to operating positions. Both isolation valves open and cross over (equalizing) valve closed.

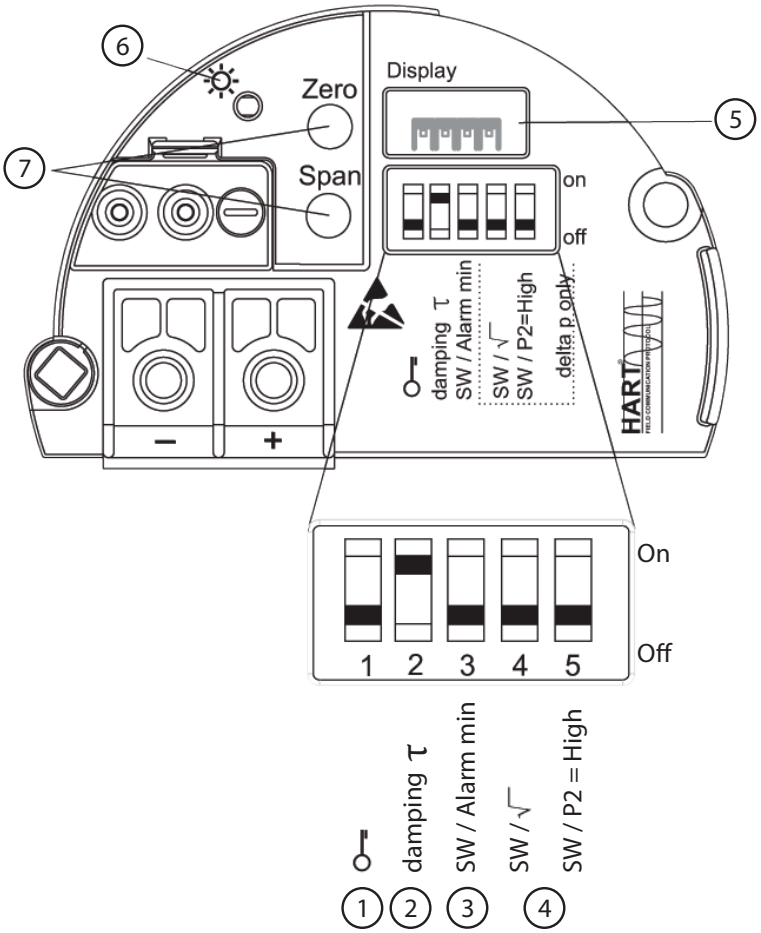

Item Number	Description
1	DIP switch for locking/unlocking parameters relevant to the measured value
2	DIP switch for switching damping on/off
3	DIP switch for alarm current SW / Alarm Min (3.6 mA)
4	DIP switch only for Deltabar M: Switch 4: "SW/Square root"; used to control the output characteristics Switch 5: "SW/P2-High"; used to determine the high-pressure side
5	Slot for optional local display
6	Green LED to indicate successful operation
7	Operating keys for lower range value (zero) and upper range value (span)

SECTION 4 - TROUBLESHOOTING

CHANGES IN FLOW ACCURACY OR METER OPERATION:
TUBE

1. Debris in the tube. Repeat the purging procedure (see PURGING THE SYSTEM page #7) to remove any dirt and/or air from the flow transmitter and manifold. Trash or debris may be caught inside the meter - removal and inspection of the interior of the meter body may be required.
2. Verify that the flow tube was designed for the expected flow rates (see SPECIFICATIONS page #2).
3. Less-than-full-pipe. Verify the pipe remains full at all times. Modify the piping or relocate the flow tube.

NO CHANGE IN FLOW MEASUREMENT OR FLOW READING INACCURACY:
3-WAY VALVE MANIFOLD

1. One or both ISOLATION VALVES not open. Keep them **FULLY OPEN** during operation.
2. The cross VALVE is not closed. Keep it **FULLY CLOSED** during operation.
3. Debris in the manifold. Repeat the purging procedure (see PURGING THE SYSTEM page #7).

INACCURATE OR ERRATIC FLOW READINGS:
FLOW TRANSMITTER

1. Debris in the transmitter. Repeat the purging procedure (see PURGING THE SYSTEM page #7). Debris in the transmitter may damage and/or permanently change its calibration.
2. Improper transmitter programming. Verify that the flow transmitter is on the correct meter.

   The flow transmitter is programmed by the factory for the flow rate specified by the customer. An Operation, Configuration and Calibration manual is shipped with the VM V-Cone System.

INACCURATE OR ERRATIC FLOW READINGS:
FLOW INDICATOR

1. Changes to the original settings. Contact the factory for the proper programming data.
2. Loose or improper wiring. Check all connections and verify the correct source voltage.
3. Line noise or electrical interference. Locate the indicator away from power lines, protect from power surges.

   The flow indicator is programmed by the factory for the flow rate and flow units specified by the customer. Flow Indicator program parameters are accessed after entering a factory default password of "1000". The user can verify and/or change the program parameters, assign a new password, and lockout the front panel to prevent further changes.
   More Flow Indicator information can be found in the EA402 IOM manual (included with the VM V-Cone System), or from the McCrometer website at www.mccrometer.com. The document number is 24508-68.

PARTS IDENTIFICATION

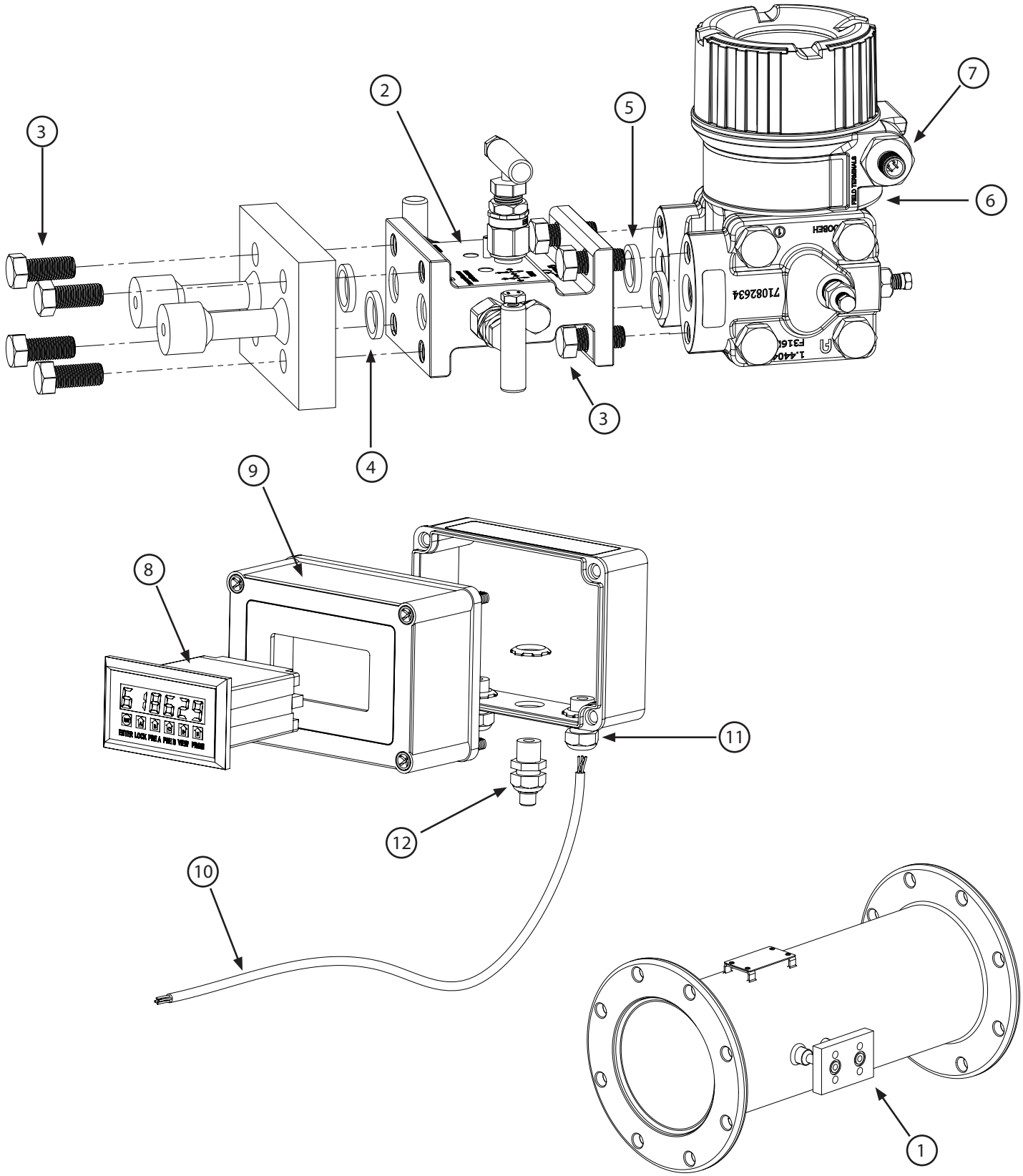

PARTS IDENTIFICATION (continued)

Drawing Number	Part Number	Description	Quantity Required	Comments
1	*	V-Cone Primary Element	1	
2	F1131	3-way Valve Isolation Manifold	1	Includes two ring seals
3	10299	Bolt, 7/16-20 x 1", Grade 5	8	
4	10300	Seal, Manifold-to-Meter	2	Included with 3-way Valve Manifold
5	10300	Seal, Transmitter-to-Manifold	2	Included with Flow Transmitter
6	DP124-xxx	Flow Transmitter	1	
7	EJ120-00	Compression fitting, 1/2" NPT	4	
8 - OPTIONAL	EA402-10	Flow Indicator	1	Remote Mount Display
9 - OPTIONAL	EA402-50	Indicator Housing	1	Includes 3 each EH445-00 and EJ120-00
10	EW550-00	Wire, 4-conductor Flow Meter-toFlow Indicator	300"	Not to be used for A/C source voltage
11	EH445-00	Lock nut, 1/2" NPT	3	
12	10771	Mushroom Plug	1	Seals output when not in use

* Part number varies by application flow rate and line size. Contact the factory for the correct part number.

CONTACT INFORMATION

Product information, pricing, and technical assistance is available from the McCrometer Customer Service Department at 951-652-6811.

Information on all McCrometer products is available on our website at www.mccrometer.com.

MANUFACTURER'S WARRANTY

This Warranty shall apply to and be limited to the original purchaser consumer of any McCrometer product. Meters or instruments defective because of faulty material or workmanship will be repaired or replaced, at the option of McCrometer, Inc., free of charge, FOB the factory in Hemet, California, within a period of one (1) year from the date of delivery.

Repairs or modifications by others than McCrometer, Inc. or their authorized representatives shall render this Warranty null and void in the event that factory examination reveals that such repair or modification was detrimental to the meter or instrument. Any deviations from the factory calibration require notification in writing to McCrometer, Inc. of such recalibrations or this warranty shall be voided.

In case of a claim under this Warranty, the claimant is instructed to contact McCrometer, Inc. 3255 West Stetson Ave., Hemet, California 92545, and to provide an identification or description of the meter or instrument, the date of delivery, and the nature of the problem.

The Warranty provided above is the only warranty made by McCrometer, Inc. with respect to its products or any parts thereof and is made expressly in lieu of any other warranties, by course of dealing, usages of trade or otherwise, expressed or implied, including but not limited to any implied warranties of fitness for any particular purpose or of merchantability under the uniform commercial code. It is agreed this warranty is in lieu of and buyer hereby waives all other warranties, guarantees or liabilities arising by law or otherwise. Seller shall not incur any other obligations or liabilities or be liable to buyer, or any customer of buyer for any anticipated or lost profits, incidental or consequential damages, or any other losses or expenses incurred by reason of the purchase, installation, repair, use or misuse by buyer or third parties of its products (including any parts repaired or replaced); and seller does not authorize any person to assume for seller any other liability in connection with the products or parts thereof. This Warranty cannot be extended, altered or varied except by a written instruction signed by seller and buyer.

This Warranty gives you specific legal rights, and you may also have other rights which vary from state to state.

McCrometer, Inc. reserves the right to make improvements and repairs on product components which are beyond the warranty period at the manufacturer's option and expense, without obligation to renew the expired warranty on the components or on the entire unit. Due to the rapid advancement of meter design technology, McCrometer, Inc. reserves the right to make improvements in design and material without prior notice to the trade.

All sales and all agreements in relation to sales shall be deemed made at the manufacturer's place of business in Hemet, California and any dispute arising from any sale or agreement shall be interpreted under the laws of the State of California.

OTHER McCROMETER PRODUCTS INCLUDE:

Propeller Meter	Propeller Flowmeters
Water Specialties Propeller Meter	Propeller Flowmeters
Ultra Mag®	Magnetic Flowmeters
FPI Mag®	Magnetic Flowmeters
FPI-X™	Magnetic Flowmeters
SPI Mag™	Magnetic Flowmeters
Mag 3000™	Magnetic Flowmeters
McCrometer Connect™	Wireless Monitoring Systems
VCONE®	Differential Pressure Flowmeters
VCONE®	Differential Pressure Flowmeters
Wafer-Cone®	Differential Pressure Flowmeters

McCROMETER
3255 WEST STETSON AVENUE • HEMET, CALIFORNIA 92545 USA www.mccrometer.com
TEL: 951-652-6811 • 800-220-2279 • FAX: 951-652-3078 Printed In The U.S.A. Lit. # 30121-60 Rev. 1.0/04-14

Copyright © 2014 McCrometer, Inc. All printed material should not be changed or altered without permission of McCrometer. Any published technical data and instructions are subject to change without notice. Contact your McCrometer representative for current technical data and instructions.

Level Pressure Flow Temperature Liquid Analysis Registration Systems Components Services Solutions

Brief Operating Instructions

Deltabar M

PMD55

Differential pressure measurement

HART COMMUNICATION PROTOCOL

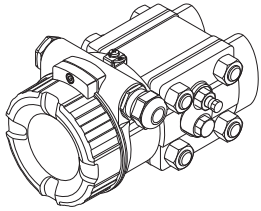

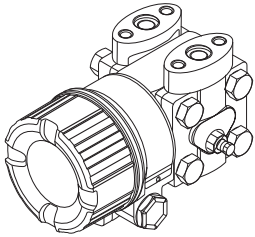

These Instructions are Brief Operating Instructions; they are not a substitute for the Operating Instructions pertaining to the device.
Detailed information about the device can be found in the Operating Instructions and the other documentation:

Available for all device versions via:
– Internet: www.endress.com/deviceviewer
– Smart phone/tablet: *Endress+Hauser Operations App*

KA01027P/00/EN/16.14
71269367

Endress+Hauser
People for Process Automation

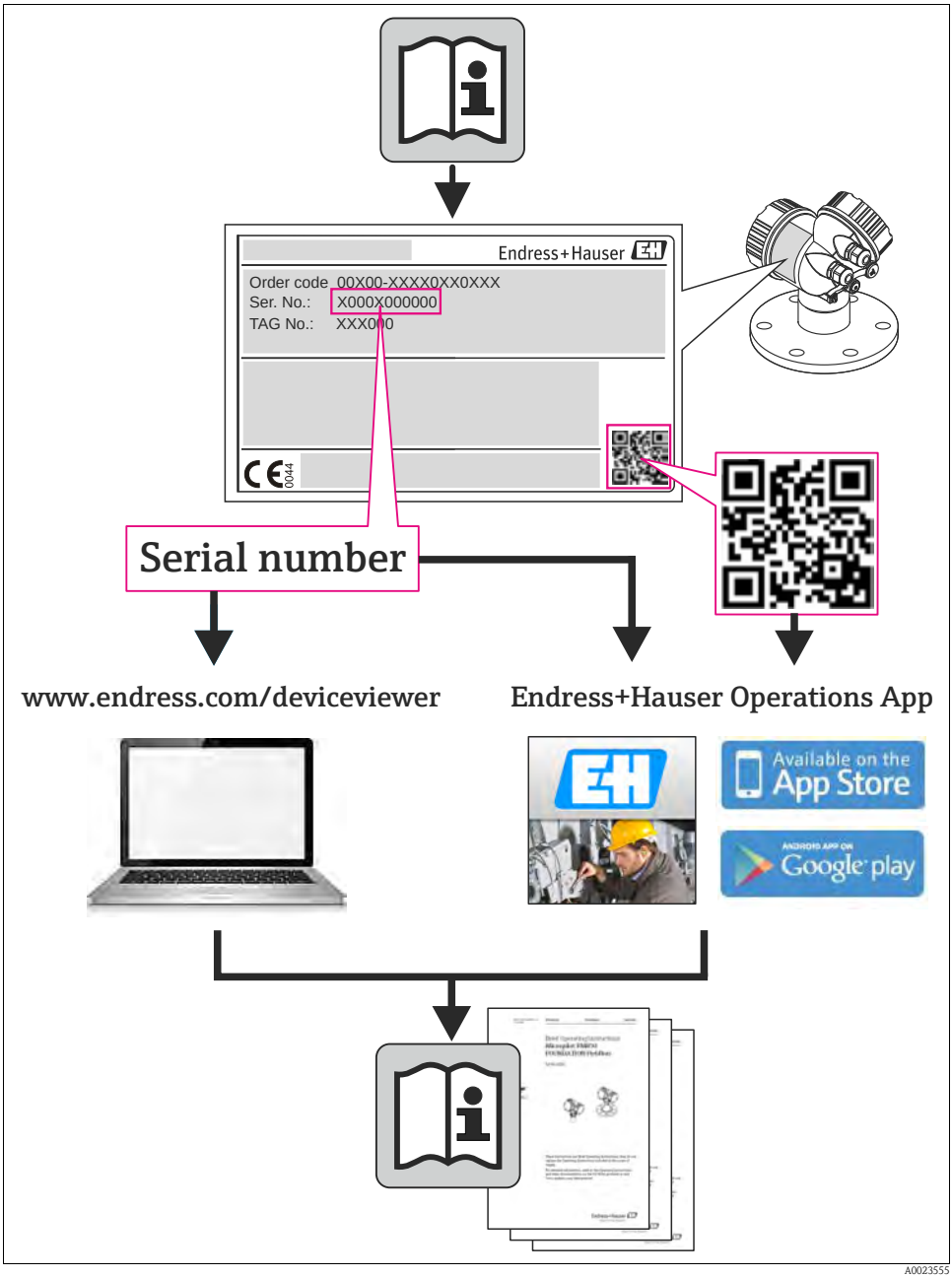
Endress+Hauser
Order code 00X00-XXXX0XX0XXX
Ser. No.: X000X000000
TAG No.: XXX000
0044
Serial number
www.endress.com/deviceviewer
Endress+Hauser Operations App
Available on the App Store
ANDROID APP ON Google play

A0023555

Table of contents

1 Safety instructions 4
1.1 Designated use 4
1.2 Installation, commissioning and operation 4
1.3 Operational safety and process safety 4
1.4 Return 5
1.5 Safety icons 5

2 Product identification. 5

3 Installation 5
3.1 Installation position 6
3.2 Closing the housing cover 8
3.3 Post-installation check 8

4 Wiring. 9
4.1 Connecting the device 9
4.2 Connecting the measuring unit 10
4.3 Potential equalization 10
4.4 Post-connection check 11

5 Operation 11
5.1 Operation without operating menu 11
5.2 Operation with operating menu 13

6 Commissioning 21
6.1 Commissioning without an operating menu 22
6.2 Commissioning with an operating menu 25
6.3 Position zero adjustment 26
6.4 Commissioning of Differential pressure measurement 27
6.5 Commissioning of Flow measurement 28
6.6 Commissioning of Level measurement 30

1 Safety instructions

1.1 Designated use

The Deltabar M is a differential pressure transmitter for measuring differential pressure, level and flow.

The manufacturer accepts no liability for damages resulting from incorrect use or use other than that designated.

1.2 Installation, commissioning and operation

- The device must only be installed, connected, commissioned and maintained by qualified and authorized specialists (e.g. electrical technicians) in full compliance with the instructions in this manual, the applicable norms, legal regulations and certificates (depending on the application).
- The specialist must have read and understood this manual and must follow the instructions it contains. If you are unclear on anything in these Brief Operating Instructions, you must read the Operating Instructions. The Operating Instructions provide detailed information on the device/measuring system.
- The device may only be modified or repaired if such work is expressly permitted in the Operating Instructions.
- If faults cannot be rectified, the device must be taken out of service and secured against unintentional commissioning.
- Do not operate damaged devices. Mark them as defective.

1.3 Operational safety and process safety

- Alternative monitoring measures must be taken to ensure operational safety and process safety during confiugration, testing and maintenance work on the device.
- The device is safely built and tested according to state-of-the-art technology and has left the factory in perfect condition as regards technical safety. The applicable regulations and European standards have been taken into account.
- Pay particular attention to the technical data on the nameplate.
- Devices for use in hazardous areas are fitted with an additional nameplate. If the device is to be installed in an explosion hazardous area, then the specifications in the certificate as well as all national and local regulations must be observed. The device is accompanied by separate "Ex documentation", which is an integral part of this Operating Instructions. The installation regulations, connection values and Safety Instructions listed in this Ex document must be observed. The documentation number of the related Safety Instructions is also indicated on the additional nameplate.
- If using devices for applications with safety integrity level, the separate manual on functional safety must be observed thoroughly.

1.4 Return

Follow the instructions on returning the device as outlined in the Operating Instructions.

1.5 Safety icons

Symbol	Meaning
⚠	**Warning!** A warning highlights actions or procedures which, if not performed correctly, will lead to personal injury, a safety hazard or destruction of the instrument.
☝	**Caution!** Caution highlights actions or procedures which, if not performed correctly, may lead to personal injury or incorrect functioning of the instrument.
✎	**Note!** A note highlights actions or procedures which, if not performed correctly, may indirectly affect operation or may lead to an instrument response which is not planned.

2 Product identification

The following options are available for identification of the measuring device:
- Nameplate specifications
- Order code with breakdown of the device features on the delivery note
- Enter serial numbers from nameplates in W@M Device Viewer (www.endress.com/deviceviewer): All information about the measuring device is displayed.

For an overview of the technical documentation provided, enter the serial number from the nameplates in the W@M Device Viewer (www.endress.com/deviceviewer).

3 Installation

✎ Note!
Disassembly of the screws with item number (1) is not permissible under any circumstances and will result in loss of warranty.

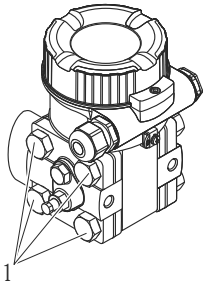

3.1 Installation position

Note!

- Due to the orientation of the Deltabar M, there may be a shift in the measured value, i.e. when the container is empty, the measured value does not display zero. You may correct this zero point shift by a position adjustment in one of the following ways:
  - via the operation keys on the electronics module (→ 13, "Function of the operating elements")
  - via the operating menu (→ 26, "Position zero adjustment")
- General recommendations for routing the impulse piping can be found in DIN 19210 "Methods for measurement of fluid flow; differential piping for flow measurement devices" or the corresponding national or international standards.
- Using a three-valve or five-valve manifold allows for easy commissioning, installation and maintenance without interrupting the process.
- When routing the impulse piping outdoors, ensure that sufficient anti-freeze protection is used, e.g. by using pipe heat tracing.
- Install the impulse piping with a monotonic gradient of at least 10%.
- Endress+Hauser offers a mounting bracket for installing on pipes or walls (see Operating Instructions BA00382P).

3.1.1 Installation position for flow measurement

Note!
For more information about differential pressure flow measurement refer to following documents:

- Differential pressure flow measurements with orifices: Technical Information TI00422P
- Differential pressure flow measurement with Pitot tubes: Technical Information TI00425P

Flow measurement in gases

- Mount the Deltabar M above the measuring point so that the condensate which may be present, can run off into the process piping.

Flow measurement in steam

- Mount the Deltabar M below the measuring point.
- Mount the condensate traps at the same level as the tapping points and at the same distance to the Deltabar M.
- Prior to commissioning, fill the impulse piping to the height of the condensate traps.

Flow measurement in liquids

- Mount the Deltabar M below the measuring point so that the impulse piping is always filled with liquid and gas bubbles can run back into the process piping.
- When measuring in media with solid parts, such as dirty liquids, installing separators and drain valves is useful for capturing and removing sediment.

3.1.2 Installation position for level measurement

Level measurement in an open container

- Mount the Deltabar M below the lower measuring connection so that the impulse piping is always filled with liquid.
- The low-pressure is open to atmospheric pressure.
- When measuring in media with solid parts, such as dirty liquids, installing separators and drain valves is useful for capturing and removing sediment.

Level measurement in a closed container

- Mount the Deltabar M below the lower measuring connection so that the impulse piping is always filled with liquid.
- Always connect the low-pressure above the maximum level.
- When measuring in media with solid parts, such as dirty liquids, installing separators and drain valves is useful for capturing and removing sediment.

Level measurement in a closed container with superimposed steam

- Mount the Deltabar M below the lower measuring connection so that the impulse piping is always filled with liquid.
- Always connect the low-pressure above the maximum level.
- A condensate trap ensures constant pressure on the low-pressure.
- When measuring in media with solid parts, such as dirty liquids, installing separators and drain valves is useful for capturing and removing sediment.

3.1.3 Installation position for differential pressure measurement

Differential pressure measurement in gases and steam

- Mount the Deltabar M above the measuring point so that the condensate which may be present, can run off into the process piping.

Differential pressure measurement in liquids

- Mount the Deltabar M below the measuring point so that the impulse piping is always filled with liquid and gas bubbles can run back into the process piping.
- When measuring in media with solid parts, such as dirty liquids, installing separators and drain valves is useful for capturing and removing sediment.

3.2 Closing the housing cover

✎ Note!
When closing the housing cover, please ensure that the thread of the cover and housing are free from dirt, e.g. sand.If you feel any resistance when closing the cover, check the thread on both again to ensure that they are free from dirt.

3.3 Post-installation check

After installing the device, carry out the following checks:
- Are all screws firmly tightened?
- Are the housing covers screwed down tight?
- Are all locking screws and vent valves firmly tightened?

4 Wiring

4.1 Connecting the device

Note!
- When using the measuring device in hazardous areas, installation must comply with the corresponding national standards and regulations and the Safety Instructions or Installation or Control Drawings.
- A suitable circuit breaker has to be provided for the device in accordance with IEC/EN 61010.
- Devices with integrated overvoltage protection must be earthed.
- Protective circuits against reverse polarity, HF influences and overvoltage peaks are integrated.

The procedure

1. Check if the supply voltage matches the specified supply voltage on the nameplate.
2. Switch off the supply voltage before connecting the device.
3. Remove housing cover.
4. Guide cable through the gland. Preferably use twisted, screened two-wire cable.
5. Connect device in accordance with the following diagram.
6. Screw down housing cover.
7. Switch on supply voltage.

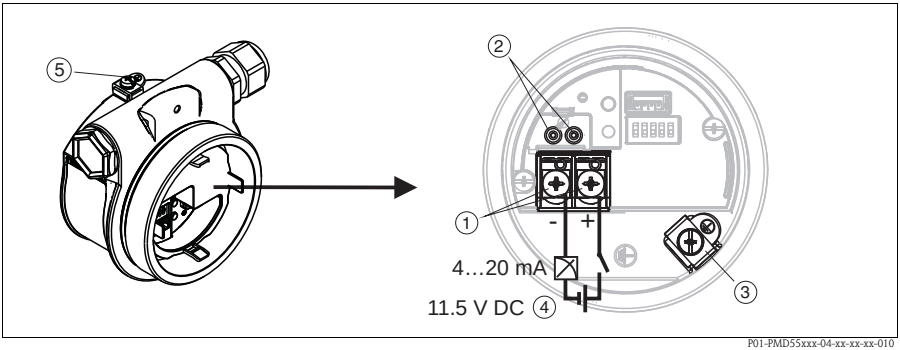

Electrical connection 4...20 mA HART

1 Terminals for supply voltage and signal
2 Test terminals
3 Grounding terminal
4 Supply voltage: 11,5 ... 45 VDC (versions with plug connectors: 35 V DC)
5 External ground terminal

4.2 Connecting the measuring unit

4.2.1 Supply voltage

✎ Note!
- When using the measuring device in hazardous areas, installation must comply with the corresponding national standards and regulations and the Safety Instructions or Installation or Control Drawings.
- All explosion protection data are given in separate documentation which is available upon request. The Ex documentation is supplied as standard with all devices approved for use in explosion hazardous areas.

Electronic version	
4 to 20 mA HART, for non-hazardous areas	11.5 to 45 V DC (versions with plug-in connector 35 V DC)

Taking 4 to 20 mA test signal

A 4 to 20 mA test signal may be measured via the test terminals without interrupting the measurement.
To keep the corresponding measured error below 0.1%, the current measuring device should exhibit an internal resistance of < 0.7 Ω.

4.2.2 Cable specification

- Endress+Hauser recommends using twisted, shielded two-wire cables.
- Terminals for wire cross-sections 0.5 to 2.5 mm^2 (20 to 14 AWG)
- Cable outer diameter: 5 to 9 mm (0.2 to 0.35 in) depends on the used cable gland (see technical information)

4.2.3 Shielding/potential equalization

- You achieve optimum shielding against disturbances if the shielding is connected on both sides (in the cabinet and on the device). If potential equalization currents are expected in the plant, only ground shielding on one side, preferably at the transmitter.
- When using in hazardous areas, you must observe the applicable regulations.
  Separate Ex documentation with additional technical data and instructions is included with all Ex systems as standard.

4.3 Potential equalization

Hazardous area applications: Connect all devices to the local potential equalization.
Observe the applicable regulations.

4.4 Post-connection check

Perform the following checks after completing electrical installation of the device:
- Does the supply voltage match the specifications on the nameplate?
- Is the device connected as per Section 3.1?
- Are all screws firmly tightened?
- Are the housing covers screwed down tight?

As soon as voltage is applied to the device, the green LED on the electronic insert lights up for a few seconds or the connected local display lights up.

5 Operation

5.1 Operation without operating menu

5.1.1 Position of operating elements

The operating keys and DIP switches are located on the electronic insert in the device.

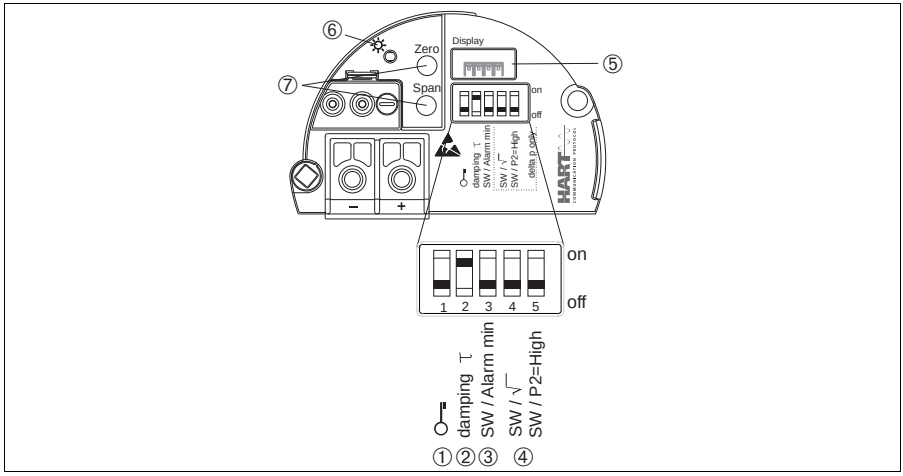

P01-Mxxxxxxx-19-xx-xx-xx-001

Fig. 1: HART electronic insert

1 DIP switch for locking/unlocking parameters relevant to the measured value
2 DIP switch for switching damping on/off
3 DIP switch for alarm current SW / Alarm Min (3.6 mA)
4 DIP switch:
Switch 4: "SW/Square root"; used to control the output characteristics
Switch 5: "SW/P2-High"; used to determine the high-pressure side
5 Slot for optional local display
6 Green LED to indicate successful operation
7 Operating keys for lower range value (zero) and upper range value (span)

Function of the DIP switches

Switches	Symbol/ labeling	Switch position	
		"off"	"on"
1		The device is unlocked. Parameters relevant to the measured value can be modified.	The device is locked [1]. Parameters relevant to the measured value cannot be modified.
2	damping τ	Damping is switched off. The output signal follows measured value changes without any delay.	Damping is switched on. The output signal follows measured value changes with the delay time τ.[2]
3	SW/Alarm min	The alarm current is defined by the setting in the operating menu. ("Setup" -> "Extended setup" -> "Curr. output" -> "Output fail mode")	The alarm current is 3.6 mA regardless of the setting in the operating menu.
4	SW/√	The output characteristics is defined by the setting in the operating menu. ■ "Setup" -> "Measuring mode" ■ "Setup" -> "Extended Setup" -> "Current output" -> "Linear/Sqroot"	The measuring mode is "flow" and the output characterisitcs is "Square root" regardless of the settings in the operating menu.
5	SW/P2= High	The high-pressure side is defined by the setting in the operating menu. ("Setup" -> "High Press. Side")	The high-pressure side is allocated to the P2 pressure connection regardless of the setting in the operating menu.

1) If operation is locked by means of the DIP switch, you can only unlock operation again by means of the DIP switch. If operation is locked by means of the operating menu, you can only unlock operation again using the operating menu.

2) The value for the delay time can be configured via the operating menu ("Setup" -> "Damping").
Factory setting: τ = 2 s or as per order specifications.

Function of the operating elements

Operating key(s)	Meaning
"Zero" pressed for at least 3 seconds	**Get LRV** ■ **"Pressure" measuring mode** The pressure present is accepted as the lower range value (LRV). ■ **"Level" measuring mode, "In pressure" level selection, "Wet" calibration mode** The pressure present is assigned to the lower level value ("Empty calibration"). ✎ Note! No function is assigned to the key if level selection = "In height" and/or calibration mode = "Dry" ■ **"Flow" measuring mode** There is no function allocated to the "Zero" key.
"Span" pressed for at least 3 seconds	**Get URV** ■ **"Pressure" measuring mode** The pressure present is accepted as the upper range value (LRV). ■ **"Level" measuring mode, "In pressure" level selection, "Wet" calibration mode** The pressure present is assigned to the upper level value ("Full calibration"). ✎ Note! No function is assigned to the key if level selection = "In height" and/or calibration mode = "Dry" ■ **"Flow" measuring mode** The pressure present is accepted as the maximum pressure ("Max. pressure flow") and allocated to the maximum flow ("max. flow").
"Zero" and **"Span"** pressed simultaneously for at least 3 seconds	**Position adjustment** The sensor characteristic curve is shifted such that the pressure present becomes the zero value.

5.2 Operation with operating menu

5.2.1 Operation concept

The operation concept makes a distinction between the following user roles:

User role	Meaning
Operator	Operators are responsible for the devices during normal "operation". This is usually limited to reading process values either directly at the device or in a control room. If the work with the devices extends beyond value read-off tasks, the tasks involve simple, application-specific functions that are used in operation. Should an error occur, these users simple forward the information on the errors but do not intervene themselves.
Service engineer/technician	Service engineers usually work with the devices in the phases following device commissioning. They are primarily involved in maintenance and troubleshooting activities for which simple settings have to be made at the device. Technicians work with the devices over the entire life cycle of the product. Thus, commissioning and advanced settings and configurations are some of the tasks they have to carry out.
Expert	Experts work with the devices over the entire product life cycle, but their device requirements are often extremely high. Individual parameters/functions from the overall functionality of the devices are required for this purpose time and again. In addition to technical, process-oriented tasks, experts can also perform administrative tasks (e.g. user administration). "Experts" can avail of the entire parameter set.

5.2.2 Structure of the operating menu

User role	Submenu	Meaning/use
Operator	Language	Only consists of the "Language" parameter (000) where the operating language for the device is specified. The language can always be changed even if the device is locked.
Operator	Display/operat.	Contains parameters that are needed to configure the measured value display (selecting the values displayed, display format, display contrast, etc.). With this submenu, users can change the measured value display without affecting the actual measurement.
Service engineer/ technician	Setup	Contains all the parameters that are needed to commission measuring operations. This submenu has the following structure: ▪ **Standard setup parameters** A wide range of parameters, which can be used to configure a typical application, is available at the start. The measuring mode selected determines which parameters are available. After making settings for all these parameters, the measuring operation should be completely configured in the majority of cases. ▪ **"Extended setup" submenu** The "Setup" submenu contains additional parameters for more in-depth configuration of the measurement operation to convert the measured value and to scale the output signal. This menu is split into additional submenus depending on the measuring mode selected.
Service engineer/ technician	Diagnosis	Contains all the parameters that are needed to detect and analyze operating errors. This submenu has the following structure: ▪ **Diagnostic list** Contains up to 10 error messages currently pending. ▪ **Event logbook** Contains the last 10 error messages (no longer pending). ▪ **Instrument info** Contains information on the device identification. ▪ **Measured values** Contains all the current measured values ▪ **Simulation** Is used to simulate pressure, level, flow, current and alarm/warning. ▪ **Reset**
Expert	Expert	Contains all the parameters of the device (including those in one of the submenus). The "Expert" submenu is structured by the function blocks of the device. It thus contains the following submenus: ▪ **System** Contains all the device parameters that neither affect measurement nor integration into a distributed control system. ▪ **Measurement** Contains all the parameters for configuring the measurement. ▪ **Output** Contains all the parameters for configuring the current output. ▪ **Communication** Contains all the parameters for configuring the HART interface. ▪ **Application** Contains all the parameters for configuring the functions that go beyond the actual measurement (e.g. totalizer). ▪ **Diagnosis** Contains all the parameters that are needed to detect and analyze operating errors.

5.2.3 Operation with device display (optional)

A 4-line liquid crystal display (LCD) is used for display and operation. The local display shows measured values, dialog texts, fault messages and notice messages.
For easy operation the display can be taken out of the housing (see figure steps 1 to 3). It is connected to the device through a 90 mm (3.54 in) cable.
The display of the device can be turned in 90° stages (see figure steps 4 to 6).
Depending on the orientation of the device, this makes it easy to operate the device and read the measured values.

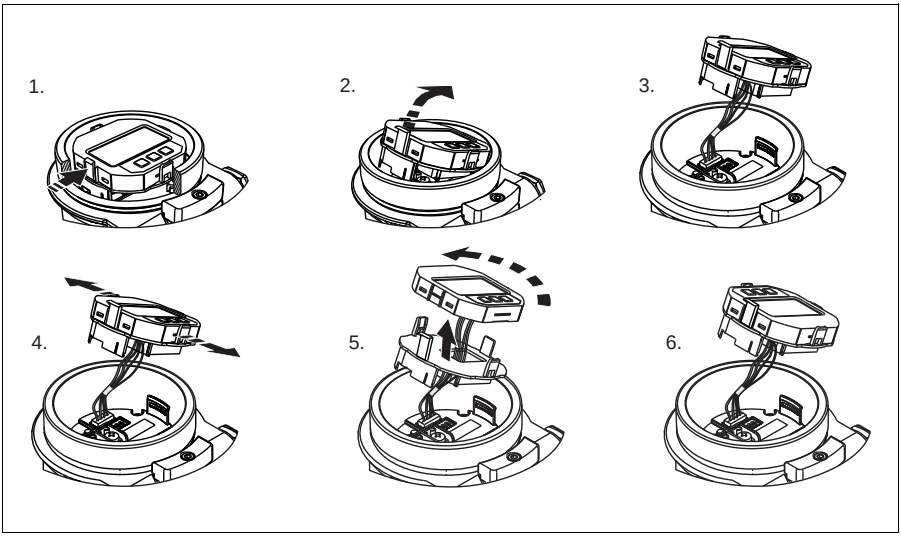

P01-Mxxxxxxx-19-xx-xx-xx-008

Functions:

- 8-digit measured value display including sign and decimal point, bargraph for 4 to 20 mA HART as current display
- Three keys for operation
- Simple and complete menu guidance as parameters are split into several levels and groups
- Each parameter is given a 3-digit parameter code for easy navigation
- Possibility of configuring the display to suit individual requirements and preferences, such as language, alternating display, contrast setting, display of other measured values such as sensor temperature etc.
- Comprehensive diagnostic functions (fault and warning message etc.)

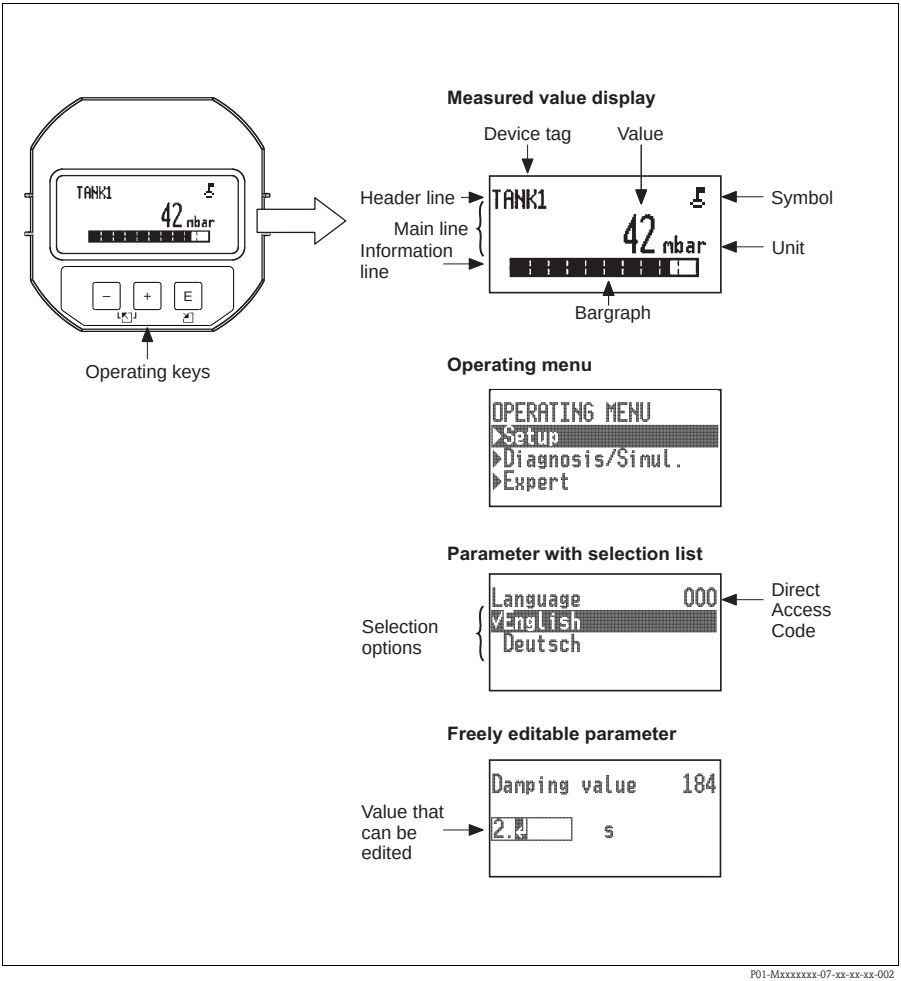

P01-Mxxxxxxx-07-xx-xx-xx-002

Display symbols

Symbol	Meaning
	Lock symbol The operation of the device is locked. To unlock the device, → 20, Locking/unlocking operation.
	Communication symbol Data transfer via communication
	Square root symbol Active measuring mode "Flow measurement" The root flow signal is used for the current output.
S	**Error message "Out of specification"** The device is being operated outside its technical specifications (e.g. during warmup or cleaning processes).
C	**Error message "Service mode"** The device is in the service mode (during a simulation, for example).
M	**Error message "Maintenance required"** Maintenance is required. The measured value remains valid.
F	**Error message "Failure detected"** An operating error has occurred. The measured value is no longer valid.

Operating keys on the display and operating module

Operating key(s)	Meaning
+	– Navigate downwards in the picklist – Edit the numerical values and characters within a function
–	– Navigate upwards in the picklist – Edit the numerical values and characters within a function
E	– Confirm entry – Jump to the next item – Selection of a menu item and activation of the editing mode
+ and E	Contrast setting of local display: darker
– and E	Contrast setting of local display: brighter
+ and –	ESC functions: – Exit the edit mode for a parameter without saving the changed value. – You are in a menu at a selection level. Each time you press the keys simultaneously, you go up a level in the menu.

Parameters with a picklist

Example: selecting "Deutsch" as the language of the menu.

Local display	Operation
Language 000 ✓English Deutsch P01-PMD55xxx-19-xx-xx-xx-002	"English" is set as the menu language (default value). A ✓ in front of the menu text indicates the active option.
Language 000 English ✓Deutsch P01-PMD55xxx-19-xx-xx-xx-001	Select "Deutsch" with "+" or "–" .
Language 000 ✓Deutsch English P01-PMD55xxx-19-xx-xx-xx-000	1. Confirm your choice with "E". A ✓ in front of the menu text indicates the active option. ("Deutsch" is now selected as the menu language.) 2. Exit the edit mode for the parameter with "E" .

User-definable parameters

Example: setting "Set URV" parameter from 100 mbar (1.5 psi) to 50 mbar (0.75 psi) .

Local display	Operation
Set URV 014 100.000 mbar P01-PMD55xxx-19-xx-xx-xx-003	The local display shows the parameter to be changed. The value highlighted in black can be changed. The "mbar" unit is specified in another parameter and cannot be modified here.
Set URV 014 100.000 mbar P01-PMD55xxx-19-xx-xx-xx-004	1. Press "+" or "–" to get to the editing mode. 2. The first digit is highlighted in black.

Local display	Operation
Set URV 014 500.000 mbar P01-PMD55xxx-19-xx-xx-xx-005	1. Use "+" to change "1" to "5". 2. Confirm "5" with "E". The cursor jumps to the next position (highlighted in black). 3. Confirm "0" with "E" (second position).
Set URV 014 500.000 mbar P01-PMD55xxx-19-xx-xx-xx-006	The third position is highlighted in black and can now be edited.
Set URV 014 50.000 mbar P01-PMD55xxx-19-xx-xx-xx-007	1. Switch to the "↵" symbol with the "-" key. 2. Use "E" to save the new value and exit the editing mode. → See next graphic.
Set URV 014 50.0000 mbar P01-PMD55xxx-19-xx-xx-xx-008	The new value for the upper range value is 50.0 mbar (0.75 psi). – You exit the edit mode for the parameter with "E" . – You can get back to the editing mode with "+" or "–".

Accepting the pressure present

Example: setting position adjustment

Local display	Operation
Pos. zero adjust 007 ✓Abort Confirm P01-PMD55xxx-19-xx-xx-xx-009	The pressure for position adjustment is present at the device.

Local display	Operation
Pos. zero adjust 007 Confirm ✓Abort P01-PMD55xxx-19-xx-xx-xx-010	Use "+" or "–" to switch to the "Confirm" option. The active option is highlighted in black.
Compensation accepted! P01-PMD55xxx-19-xx-xx-xx-011	Accept the pressure present as position adjustment with the "E" key. The device confirms the adjustment and goes back to the "Pos. zero adjust" parameter.
Pos. zero adjust 007 ✓Abort Confirm P01-PMD55xxx-19-xx-xx-xx-009	Exit the edit mode for the parameter with "E".

5.2.4 Locking/unlocking operation

Once you have entered all the parameters, you can lock your entries against unauthorized and undesired access.
Locked operation is indicated as follows:

- By the symbol on the onsite display
- The parameters are grayed out in FieldCare and the HART handheld terminal, which means they cannot be edited. Indicated in the corresponding "Locking" parameter.

Parameters which refer to how the display appears, e.g. "Language" and "Display contrast", can still be altered.

Note!
If operation is locked by means of the DIP switch, you can only unlock operation again by means of the DIP switch. If operation is locked by means of the operating menu, you can only unlock operation again using the operating menu.

The "Operator code" parameter is used to lock and unlock the device.

Parameter name	Description
Operator code (021) Entry Menu path: Setup → Extended setup → Operator code	Use this function to enter a code to lock or unlock operation. **User input:** ■ To lock: Enter a number ≠ the release code (value range: 1 up to 9999). ■ To unlock: Enter the release code. ✎ Note! The release code is "0" in the order configuration. Another release code can be defined in the "Code definition" parameter. If the user has forgotten the release code, it can be made visible again by entering the number sequence "5864". **Factory setting:** 0

The release code is defined in the "Code definition" parameter.

Parameter name	Description
Code definition (023) Entry Menu path: Setup → Extended setup → Code definition	Use this function to enter a release code with which the device can be unlocked. **User input:** ■ A number between 0 and 9999 **Factory setting:** 0

6 Commissioning

⚠ Warning!

- If a pressure smaller than the minimum permitted pressure or greater than the maximum permitted pressure is present at the device, the following messages are output in succession:
  1. "S140 Working range P" or "F140 Working range P"
  2. "S841 Sensor range" or "F841 Sensor range"[1)]
  3. "M431 Adjustment" or "F431 Sensor range"[1]

✎ Note!
The device is configured for the Pressure measuring mode as standard. The measuring range and the unit in which the measured value is transmitted correspond to the specifications on the nameplate.

1) depending on the setting in the "Alarm behavior" (050) parameter

6.1 Commissioning without an operating menu

6.1.1 Pressure measuring mode

If no local display is connected, the following functions are possible by means of the keys on the electronic insert:
- Position adjustment (zero point correction)
- Setting lower range value and upper range value
- Device reset

Note!
- Operation must be unlocked. → 20, "Locking/unlocking operation"
- The device is configured for the "Pressure" measuring mode as standard. You can switch measuring modes by means of the "Measuring mode" parameter. → 25, "Measuring mode selection"
- The pressure applied must be within the nominal pressure limits of the sensor. See information on the nameplate.

Carrying out position adjustment.[1]		**Setting lower range value.**		**Setting upper range value.**	
Pressure is present at device.		Desired pressure for lower range value is present at device.		Desired pressure for upper range value is present at device.	
↓		↓		↓	
Press the "Zero" and "Span" keys simultaneously for at least 3 s.		Press the "Zero" key for at least 3 s.		Press the "Span" key for at least 3 s.	
↓		↓		↓	
Does the LED on the electronic insert light up briefly?		Does the LED on the electronic insert light up briefly?		Does the LED on the electronic insert light up briefly?	
Yes	No	Yes	No	Yes	No
↓	↓	↓	↓	↓	↓
Applied pressure for position adjustment has been accepted.	Applied pressure for position adjustment has not been accepted. Observe the input limits.	Applied pressure for lower range value has been accepted.	Applied pressure for lower range value has not been accepted. Observe the input limits.	Applied pressure for upper range value has been accepted.	Applied pressure for upper range value has not been accepted. Observe the input limits.

1) Observe warning on commissioning (→ 21)

6.1.2 Level measuring mode

The following functions are possible by means of the keys on the electronic insert:
- Position adjustment (zero point correction)
- Setting the lower and upper pressure value and assigning to the lower and upper level value

- Device reset

✎ Note!

- The "Zero" and "Span" keys only have a function with the following setting:
  – "Level selection" = "In pressure", "Calibration mode" = "Wet"
  The keys have no function in other settings.
- The device is configured for the "Pressure" measuring mode as standard. You can switch measuring modes by means of the "Measuring mode" parameter. → 🗎 25, "Measuring mode selection"
  The following parameters are set to the following values at the factory:
  – "Level selection" = "In pressure"
  – "Calibration mode": wet
  – "Output unit": %
  – "Empty calib.": 0.0
  – "Full calib.": 100.0
  – "Set LRV": 0.0 (corresponds to 4 mA value)
  – "Set URV": 100.0 (corresponds to 20 mA value)
- Operation must be unlocked. → 🗎 20, "Locking/unlocking operation".
- The pressure applied must be within the nominal pressure limits of the sensor. See information on the nameplate.

Carrying out position adjustment.[1]		**Setting lower pressure value.**		**Setting upper pressure value.**	
Pressure is present at device.		Desired pressure for lower pressure value ("empty pressure") is present at device.		Desired pressure for upper pressure value ("full pressure") is present at device.	
↓		↓		↓	
Press the "Zero" and "Span" keys simultaneously for at least 3 s.		Press the "Zero" key for at least 3 s.		Press the "Span" key for at least 3 s.	
↓		↓		↓	
Does the LED on the electronic insert light up briefly?		Does the LED on the electronic insert light up briefly?		Does the LED on the electronic insert light up briefly?	
Yes	No	Yes	No	Yes	No
↓	↓	↓	↓	↓	↓
Applied pressure for position adjustment has been accepted.	Applied pressure for position adjustment has not been accepted. Observe the input limits.	The pressure present was saved as the lower pressure value ("empty pressure") and assigned to the lower level value ("empty calibration").	The pressure present was not saved as the lower pressure value. Observe the input limits.	The pressure present was saved as the upper pressure value ("full pressure") and assigned to the upper level value ("full calibration").	The pressure present was not saved as the upper pressure value. Observe the input limits.

1) Observe warning on commissioning (→ 🗎 21)

6.1.3 Flow measuring mode

The following functions are possible by means of the keys on the electronic insert:
- Position adjustment (zero point correction)
- Set the maximum pressure value and assign it to the maximum flow value
- Device reset

Note!
- The operation must be unlocked. → 20, "Locking/unlocking operation".
- The device is configured for the "Pressure" measuring mode as standard. You can switch measuring modes by means of the "Measuring mode" parameter. → 25, "Measuring mode selection".
- DIP switch 4 (SW/√) on the electronics insert can be used to switch to the "Flow" measuring mode. In this case, the "Measuring mode" parameter is adjusted automatically.
- The "Zero"- key does not have any function in the "Flow" measuring mode.
- The pressure applied must be within the nominal pressure limits of the sensor. See information on the nameplate.

Carry out position adjustment.[1]	
Pressure is present at device.	
↓	
Press the "Zero" and "Span" keys simultaneously for at least 3 s.	
↓	
Does the LED on the electronic insert light up briefly?	
Yes	No
↓	↓
Applied pressure for position adjustment has been accepted.	Applied pressure for position adjustment has not been accepted. Observe the input limits.

Setting maximum pressure value.	
Desired pressure for the maximum pressure value ("Max. Press. Flow") is present at device.	
↓	
Press the "Span" key for at least 3 s.	
↓	
Does the LED on the electronic insert light up briefly?	
Yes	No
↓	↓
The pressure present was saved as the maximum pressure value ("Max. Press. Flow") and assigned to the maximum flow value ("Max. Flow").	The pressure present was not saved as the maximum pressure value. Observe the input limits.

1) Observe warning concerning the commissioning (page → 21).

6.2 Commissioning with an operating menu

6.2.1 Selecting the language, measuring mode and pressure unit

Language selection

Parameter name	Description
Language (000) Selection Menu path: Main menu → Language	Select the menu language for the local display. **Options:** ■ English ■ Another language (as selected when ordering the device) ■ Possibly a third language (language of the manufacturing plant) **Factory setting**: English

Measuring mode selection

Parameter name	Description
Measuring mode (005) Selection Menu path: Setup → Measuring mode	Select the measuring mode. The operating menu is structured differently depending on the measuring mode selected. ✎ Note! If the measuring mode is changed, no conversion takes place. If necessary, the device has to be recalibrated after the measuring mode has been changed. **Options:** ■ Pressure ■ Level ■ Flow **Factory setting:** Pressure

Pressure unit selection

Parameter name	Description
Press. eng. unit (125) Selection Menu path: Setup → Press. eng. unit	Select the pressure unit. If a new pressure unit is selected, all pressure-specific parameters are converted and displayed with the new unit. **Options:** ■ mbar, bar ■ mmH2O, mH2O, inH2O ■ ftH2O ■ Pa, kPa, MPa ■ psi ■ mmHg, inHg ■ kgf/cm^2 **Factory setting:** mbar or bar depending on the sensor nominal measuring range, or as per order specifications

6.3 Position zero adjustment

The pressure resulting from the orientation of the device can be corrected here.

Parameter name	Description
Corrected press. (172) Display Menu path: Setup → Corrected press.	Displays the measured pressure after sensor trim and position adjustment. ✎ Note! If this value is not equal to "0", it can be corrected to "0" by the position adjustment.
Pos. zero adjust (007) Selection Menu path: Setup → Pos. zero adjust	Position zero adjustment – the pressure difference between zero (set point) and the measured pressure need not be known. **Example:** – Measured value = 2.2 mbar (0.033 psi) – You correct the measured value via the "Pos. zero adjust" parameter with the "Confirm" option. This means that you assign the value 0.0 to the pressure present. – Measured value (after pos. zero adjust) = 0.0 mbar – The current value is also corrected. **Options** ■ Confirm ■ Abort **Factory setting:** Abort

6.4 Commissioning of Differential pressure measurement

Parameter name	Description
Measuring mode (005) Selection	Select the "Pressure" measuring mode.
Switch P1/P2 (163) Display	Indicates whether the "SW/P2High" DIP switch (DIP switch 5) is switched on.
High pressure side (006) (183) Selection/Display	Determines, which pressure input corresponds to the high-pressure side. ✎ Note! This setting is only valid if the "SW/P2High" DIP switch is in the OFF position (see the "Pressure side switch" (163) parameter). Otherwise P2 corresponds to the high- pressure side in any case.
Press. eng. unit (125) Selection	Select the pressure unit. If a new pressure unit is selected, all pressure-specific parameters are converted and displayed with the new unit.
Corrected press. (172) Display	Displays the measured pressure after sensor trim and position adjustment.
Pos. zero adjust (007) Selection	Position adjustment – the pressure difference between zero (set point) and the measured pressure need not be known. **Example:** – Measured value = 2.2 mbar (0.033 psi) – You correct the measured value via the "Pos. zero adjust" parameter with the "Confirm" option. This means that you assign the value 0.0 to the pressure present. – Measured value (after pos. zero adjust) = 0.0 mbar – The current value is also corrected.
Set LRV (056) Entry	Set the pressure value for the lower current value (4 mA).
Set URV (057) Entry	Set the pressure value for the upper current value (20 mA).
Damping switch (164) Display	Displays the status of DIP switch 2 ("damping τ"), which is used to switch the damping of the output signal on and off.
Damping value (017) Entry/Display	Enter damping time (time constant τ). The damping affects the speed at which the measured value reacts to changes in pressure. ✎ Note! The damping is only active if DIP switch 2 ("damping τ") is in the ON position.
Pressure after damping (111) Display	Displays the measured pressure after sensor trim, position adjustment and damping.

6.5 Commissioning of Flow measurement

6.5.1 Information on flow measurement

In the "Flow" measuring mode, the device determines a volume or mass flow value from the differential pressure measured. The differential pressure is generated by means of primary elements such as pitot tubes or orifice plates and depends on the volume or mass flow. Four flow types are available: volume flow, norm volume flow (European norm conditions), standard volume flow (American standard conditions), mass flow and flow in %.

In addition, the Deltabar M software is equipped with two totalizers as standard. The totalizers add up the volume or the mass flow. The counting function and the unit can be set separately for both totalizers. The first totalizer (totalizer 1) can be reset to zero at any time while the second (totalizer 2) totalises the flow from commissioning onwards and cannot be reset.

✎ Note!
The totalizers are not available for the "Flow in %" flow type.

Parameter name	Description
Lin./SQRT switch (133) Display	Displays the status of DIP switch 4 on the electronic insert, which is used to define the output characteristics of the current output.
Measuring mode (005) Selection	Select the "Flow" measuring mode.
Pressure side switch (163) Display	Indicates whether the "SW/P2High" DIP switch (DIP switch 5) is switched on.
High pressure side (006) (183) Selection	Determines, which pressure input corresponds to the high-pressure side. ✎ Note! This setting is only valid if the "SW/P2High" DIP switch is in the OFF position (see the "Pressure side switch" (163) parameter). Otherwise P2 corresponds to the high- pressure side in any case.
Press. eng. unit (125) Selection	Select the pressure unit. If a new pressure unit is selected, all pressure-specific parameters are converted and displayed with the new unit.
Corrected press. (172) Display	Displays the measured pressure after sensor trim and position adjustment.
Pos. zero adjust (007) Selection	Position adjustment – the pressure difference between zero (set point) and the measured pressure need not be known. **Example:** – Measured value = 2.2 mbar (0.033 psi) – You correct the measured value via the "Pos. zero adjust" parameter with the "Confirm" option. This means that you assign the value 0.0 to the pressure present. – Measured value (after pos. zero adjust) = 0.0 mbar – The current value is also corrected.
Max. flow (009) Entry	Enter maximum flow of primary element. See also layout sheet of primary element. The maximum flow is assigned to the maximum pressure which you enter via the "Max. pressure flow" (010) parameter.

Parameter name	Description
Max. pressure flow (010) Entry	Enter maximum pressure of primry element. → See layout sheet of primary element. This pressure is assigned to the flow defined in the "Max. flow" (009) parameter.
Damping switch (164) Display	Displays the status of DIP switch 2 "damping τ", which is used to switch the damping of the output signal on and off.
Damping value (017) Entry/Display	Enter damping time (time constant τ). The damping affects the speed at which the measured value reacts to changes in pressure. ✎ Note! The damping is only active if DIP switch 2 "damping τ" is in the ON position.
Flow (018) Display	Displays the present flow value.
Pressure after damping (111) Display	Displays the measured pressure after sensor trim, position adjustment and damping.

6.6 Commissioning of Level measurement

6.6.1 Information on level measurement

✎ Note!
You have a choice of two methods for calculating the level: "In pressure" and "In height". The table in the "Overview of level measurement" section that follows provides you with an overview of these two measuring tasks.

- The limit values are not checked, i.e. the values entered must be appropriate for the sensor and the measuring task for the device to be able to measure correctly.
- Customer-specific units are not possible.
- The values entered for "Empty calib./Full calib.", "Empty pressure/Full pressure", "Empty height/Full height" and "Set LRV/Set URV" must be at least 1% apart. The value will be rejected, and a message output, if the values are too close together.

6.6.2 Overview of level measurement

Measuring task	Level selection	Measured variable options	Description	Measured value display
Calibration takes place by entering two pressure/level value pairs.	"In pressure"	Via the "Output unit" parameter: %, level, volume or mass units.	■ Calibration with reference pressure (wet calibration), → 📄 30 ■ Calibration without reference pressure (dry calibration) → 📄 32	The measured value display and the "Level before lin" parameter display the measured value.
Calibration takes place by entering the density and two height/level value pairs.	"In height"		■ Calibration with reference pressure (wet calibration), → 📄 36 ■ Calibration without reference pressure (dry calibration) → 📄 33	

6.6.3 Level selection "in pressure"
Calibration with reference pressure (wet calibration)

Example:
In this example, the level in a tank should be measured in "m". The maximum level is 3 m (9.8 ft). The pressure range is set to 0 to 300 mbar (4.5 psi).

Prerequisite:
- The measured variable is in direct proportion to the pressure.
- The tank can be filled and emptied.

✎ Note!
The values entered for "Empty calib./Full calib." and" Set LRV/Set URV" must be at least 1% apart. The value will be rejected, and a message output, if the values are too close together. Other limit values are not checked, i.e. the values entered must be appropriate for the sensor and the measuring task for the device to be able to measure correctly.

	Description
1	Perform "position zero adjustment" → 26.
2	Select the "Level" measuring mode via the "Measuring mode (005)" parameter (→ 25). Menu path: Setup → Measuring mode
3	Select a pressure unit via the "Press eng. unit" parameter, here "mbar" for example. Menu path: Setup → Press. eng. unit
4	Select the "In pressure" level mode via the "Level selection" parameter. Menu path: Setup → Extended setup → Level → Level selection
5	Select a level unit via the "Output unit" parameter, here "m" for example. Menu path: Setup → Extended setup → Level → Output unit
6	Select the "Wet" option via the "Calibration mode" parameter. Menu path: Setup → Extended setup → Level → Calibration mode
7	a. The hydrostatic pressure for the lower calibration point is present at the device, here "0 mbar" for example. b. Select the "Empty calib." parameter. c. Enter the level value, here "0 m" for example. Confirming the value means you assign the pressure value present to the lower level value. Menu path: Setup → Extended setup → Level → Empty calib.
8	a. The hydrostatic pressure for the upper calibration point is present at the device, here "300 mbar" (4.5 psi) for example. b. Select the "Full calib." parameter. c. Enter the level value, here "3 m" (9.8 ft) for example. Confirming the value means you assign the pressure value present to the upper level value. Menu path: Setup → Extended setup → Level → Full calib.
9	Result: The measuring range is set for 0 to 3 m (9.8 ft). 0 m corresponds to an output current of 4 mA. 3 m (9.8 ft) corresponds to an output current of 20 mA.

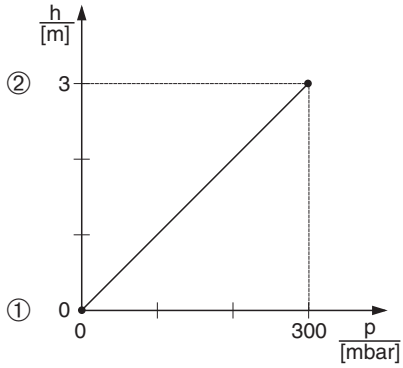

P01-xxxxxxxx-05-xx-xx-xx-011

Calibration with reference pressure (wet calibration)

1 See Table, Step 7
2 See Table, Step 8

6.6.4 Level selection "in pressure"
Calibration without reference pressure (dry calibration)

Example:
In this example, the volume in a tank should be measured in liters. The maximum volume of 1000 liters (264 US gal) corresponds to a pressure of 400 mbar (6 psi). The minimum volume of 0 liters corresponds to a pressure of 0 mbar.

Prerequisite:
- The measured variable is in direct proportion to the pressure.
- This is a theoretical calibration i.e. the pressure and volume values for the lower and upper calibration point must be known.

✎ Note!
The values entered for "Empty calib./Full calib." and" Set LRV/Set URV" must be at least 1% apart. The value will be rejected, and a message output, if the values are too close together. Other limit values are not checked, i.e. the values entered must be appropriate for the sensor and the measuring task for the device to be able to measure correctly.

	Description	
1	Perform "position zero adjustment" → 🗎 26.	
2	Select the "Level" measuring mode via the "Measuring mode (005)" parameter (→ 🗎 25). Menu path: Setup → Measuring mode	
3	Select a pressure unit via the "Press eng. unit" parameter (→ 🗎 26), here "mbar" for example. Menu path: Setup → Press. eng. unit	
4	Select the "In pressure" level mode via the "Level selection" parameter. Menu path: Setup → Extended setup → Level → Level selection	
5	Select a volume unit via the "Output unit" parameter, here "l" for example. Menu path: Setup → Extended setup → Level → Output unit	
6	Select the "Dry" option via the "Calibration mode" parameter. Menu path: Setup → Extended setup → Level → Calibration mode	

	Description
7	Enter the volume value for the lower calibration point via the "Empty calib." parameter, here "0 liter" for example. Menu path: Setup → Extended setup → Level → Empty calib.
8	Enter the pressure value for the lower calibration point via the "Empty pressure" parameter, here "0 mbar" for example. Menu path: Setup → Extended setup → Level → Empty pressure
9	Enter the volume value for the upper calibration point via the "Full calib." parameter, here "1000 liter" (264 US gal) for example. Menu path: Setup → Extended setup → Level → Full calib.
10	Enter the pressure value for the upper calibration point via the "Full pressure" parameter, here "400 mbar" (6 psi) for example. Menu path: Setup → Extended setup → Level → Full pressure
11	Result: The measuring range is set for 0 to 1000 l (264 US gal). 0 l corresponds to an output current of 4 mA. 1000 l (264 US gal) corresponds to an output current of 20 mA.

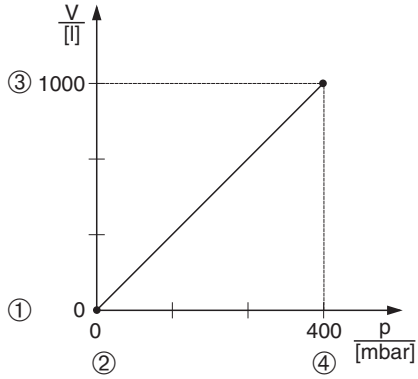

Calibration without reference pressure (dry calibration)

1 See Table, Step 7.
2 See Table, Step 8.
3 See Table, Step 9.
4 See Table, Step 10.

6.6.5 Level selection "in height"
Calibration without reference pressure (dry calibration)

Example:
In this example, the volume in a tank should be measured in liters. The maximum volume of 1000 liters (264 US gal) corresponds to a level of 4 m. The minimum volume of 0 liters corresponds to a height of 0 m. The density of the medium is 1 g/cm^3(1 SGU).

Prerequisite:
- The measured variable is in direct proportion to the pressure.
- This is a theoretical calibration i.e. the pressure and volume values for the lower and upper calibration point must be known.

✎ Note!
The values entered for "Empty calib./Full calib." and " Set LRV/Set URV" must be at least 1% apart. The value will be rejected, and a message output, if the values are too close together. Other limit values are not checked, i.e. the values entered must be appropriate for the sensor and the measuring task for the device to be able to measure correctly.

	Description	
1	Perform "position zero adjustment" → 📄 26.	
2	Select the "Level" measuring mode via the "Measuring mode (005)" parameter (→ 📄 25). Menu path: Setup → Measuring mode	
3	Select a pressure unit via the "Press eng. unit" parameter (→ 📄 26), here "mbar" for example. Menu path: Setup → Press. eng. unit	
4	Select the "In height" level mode via the "Level selection" parameter. Menu path: Setup → Extended setup → Level → Level selection	
5	Select a volume unit via the "Output unit" parameter, here "l" for example. Menu path: Setup → Extended setup → Level → Output unit	
6	Select a height unit via the "Height unit" parameter, here "m" for example. Menu path: Setup → Extended setup → Level → Height unit	
7	Select the "Wet" option via the "Calibration mode" parameter. Menu path: Setup → Extended setup → Level → Calibration mode	

	Description
8	Enter the height value for the lower calibration point via the "Empty height" parameter, here "0 m" for example. Menu path: Setup → Extended setup → Level → Empty height
9	Enter the volume value for the upper calibration point via the "Full calib." parameter, here "1000 liter" (264 US gal) for example. Menu path: Setup → Extended setup → Level → Full calib.
10	Enter the volume value for the lower calibration point via the "Empty calib." parameter, here "0 liter" for example. Menu path: Setup → Extended setup → Level → Empty calib.
11	Enter the height value for the upper calibration point via the "Full height" parameter, here "4 m" (13 ft) for example. Menu path: Setup → Extended setup → Level → Full height
12	Enter the density of the medium, using the "Adjust density" parameter, here 1 g/cm^3 (1 SGU) for example. Menu path: Setup → Extended setup → Level → Adjust density
13	Result: The measuring range is set for 0 to 1000 l (264 US gal). 0 l corresponds to an output current of 4 mA. 1000 l (264 US gal) corresponds to an output current of 20 mA.

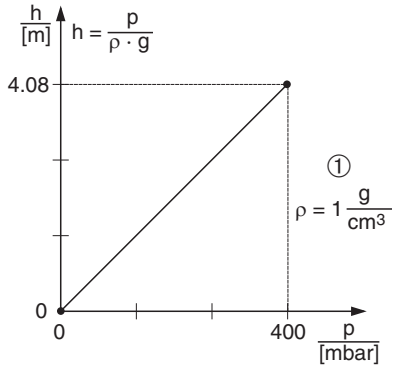

P01-FMX21xxx-05-xx-xx-xx-029

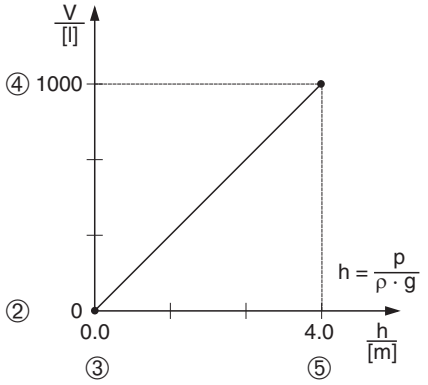

P01-FMX21xxx-05-xx-xx-xx-032

Calibration without reference pressure (dry calibration)

1 See table, Step 12.
2 See table, Step 8.
3 See table, Step 9.
4 See table, Step 10.
5 See table, Step 11.

6.6.6 Level selection "in height"
Calibration with reference pressure (wet calibration)

Example:
In this example, the volume in a tank should be measured in liters. The maximum volume of 1000 liters (264 US gal) corresponds to a level of 4 m (13 ft). The minimum volume of 0 liters corresponds to a height of 0 m. The density of the medium is 1 g/cm^3 (1 SGU).

Prerequisite:
- The measured variable is in direct proportion to the pressure.
- The tank can be filled and emptied.

✎ Note!
The values entered for "Empty calib./Full calib." and" Set LRV/Set URV" must be at least 1% apart. The value will be rejected, and a message output, if the values are too close together. Other limit values are not checked, i.e. the values entered must be appropriate for the sensor and the measuring task for the device to be able to measure correctly.

	Description	
1	Perform "position zero adjustment" → 🗎 26.	
2	Select the "Level" measuring mode via the "Measuring mode (005)" parameter (→ 🗎 25). Menu path: Setup → Measuring mode	
3	Select a pressure unit via the "Press eng. unit" parameter (→ 🗎 26), here "mbar" for example. Menu path: Setup → Press. eng. unit	
4	Select the "In height" level mode via the "Level selection" parameter. Menu path: Setup → Extended setup → Level → Level selection	
5	Select a volume unit via the "Output unit" parameter, here "l" for example. Menu path: Setup → Extended setup → Level → Output unit	
6	Select a height unit via the "Height unit" parameter, here "m" for example. Menu path: Setup → Extended setup → Level → Height unit	
7	Select the "Wet" option via the "Calibration mode" parameter. Menu path: Setup → Extended setup → Level → Calibration mode	

	Description	
8	a. The hydrostatic pressure for the lower calibration point is present at the device, here "0 mbar" for example. b. Select the "Empty calib." parameter. c. Enter the volume value, here "0 l" for example. Menu path: Setup → Extended setup → Level → Empty calib.	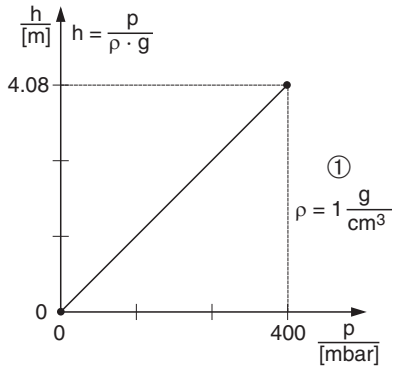 P01-FMX21xxx-05-xx-xx-xx-029
9	a. The hydrostatic pressure for the upper calibration point is present at the device, here "400 mbar" (6 psi) for example. b. Select the "Full calib." parameter. c. Enter the volume value, here "1000 l" (264 US gal) for example. Menu path: Setup → Extended setup → Level → Full calib.	
10	Enter the density of the medium, using the "Adjust density" parameter, here 1 g/cm³ (1 SGU) for example. Menu path: Setup → Extended setup → Level → Adjust density	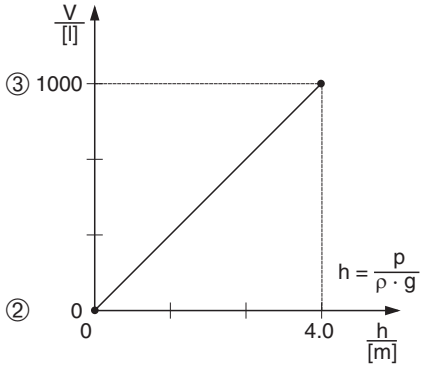 P01-FMX21xxx-05-xx-xx-xx-030 *Calibration with reference pressure (wet calibration)* *1 See table, Step 10 .* *2 See table, Step 8.* *3 See table, Step 9.*
11	If the process uses a medium other than the medium on which the calibration was based, the new density must be specified in the "Process density" parameter. Menu path: Setup → Extended Setup → Level → Density process	
12	Result: The measuring range is set for 0 to 1000 l (264 US gal). 0 l corresponds to an output current of 4 mA. 1000 l (264 US gal) corresponds to an output current of 20 mA.	

www.endress.com/worldwide

Endress+Hauser

People for Process Automation

KA01027P/00/EN/16.14
71269367
CCS/FM+SGML 9

71269367

Fliteway Technologies, Inc.

Feed Pump VFD - Control Panel

2129 East Birchwood Ave. Cudahy, WI 53110

(414) 483-5600 1-800-236-3580 FAX (414) 483-1957

FEED PUMP SKID

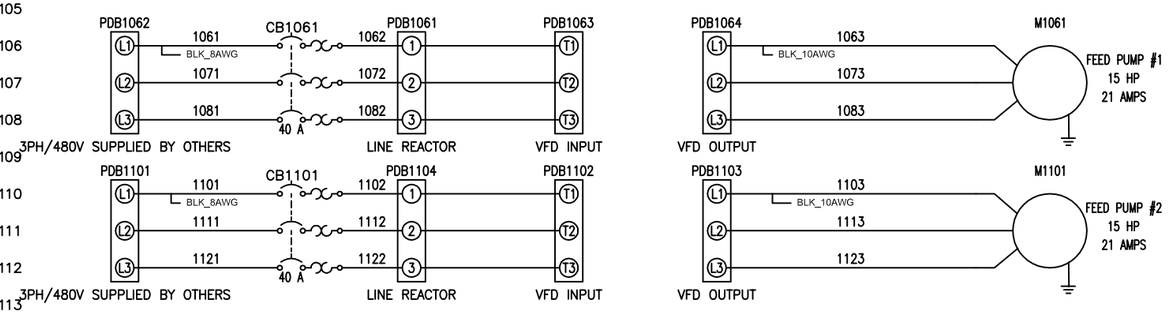

HIGH VOLTAGE PANEL

VFD FEED PUMP #1 WIRING

VFD TB 12	
VFD TB 13	VFD FAULT - PROVIDED OVER ETHERNET
VFD TB 15	
VFD TB 16	VFD RUNNING - PROVIDED OVER ETHERNET
VFD TB 25	N
VFD TB 28	120VAC VFD RUN SIGNAL (FROM MCP)

VFD FEED PUMP #2 WIRING

VFD TB 12	
VFD TB 13	VFD FAULT - PROVIDED OVER ETHERNET
VFD TB 15	
VFD TB 16	VFD RUNNING - PROVIDED OVER ETHERNET
VFD TB 25	N
VFD TB 28	120VAC VFD RUN SIGNAL (FROM MCP)

LOW VOLTAGE JUNCTION BOX

LOW VOLTAGE JBOX

HHL F/S	120VAC OR 24VDC CONTROL POWER
HHL F/S	TANK HHL ALARM (DRY CONTACT)
LL F/S	
LL F/S	TANK LLL (DRY CONTACT)
PRS. SW	
PRS. SW	HIGH PRESSURE SWITCH ALARM (N.O. DRY CONTACT)
FLOW METER	24VDC CONTROL POWER
FLOW METER	FLOW METER 4-20mA SIGNAL
FLOW METER	FLOW METER SHIELD WIRE
P1 THRM OL	120VAC CONTROL POWER
P1 THRM OL	FEED PUMP #1 MOTOR THERMAL OVERLOAD WIRED TO VFD, VIEWED OVER ETHERNET
P2 THRM OL	
P2 THRM OL	FEED PUMP #2 MOTOR THERMAL OVERLOAD WIRED TO VFD, VIEWED OVER ETHERNET
LVL TRANS	24VDC CONTROL POWER
LVL TRANS	LEVEL TRANSMITTER 4-20mA SIGNAL
LVL TRANS	LEVEL TRANSMITTER SHIELD WIRE

TREAT WATER PUMP SKID

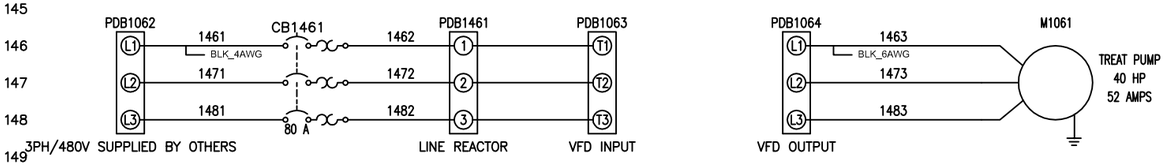

HIGH VOLTAGE PANEL

VFD TREAT PUMP WIRING

VFD TB 12	
VFD TB 13	VFD FAULT - PROVIDED OVER ETHERNET
VFD TB 15	
VFD TB 16	VFD RUNNING - PROVIDED OVER ETHERNET
VFD TB 25	N
VFD TB 28	120VAC VFD RUN SIGNAL (FROM MCP)

LOW VOLTAGE JUNCTION BOX

LOW VOLTAGE JBOX

HHL F/S	120VAC OR 24VDC CONTROL POWER
HHL F/S	TANK HHL ALARM (DRY CONTACT)
LL F/S	
LL F/S	TANK LLL (DRY CONTACT)
PRS. SW	
PRS. SW	HIGH PRESSURE SWITCH ALARM (N.O. DRY CONTACT)
FM 24V	24VDC CONTROL POWER
FM TR	FLOW METER 4-20mA SIGNAL
FM S	FLOW METER SHIELD WIRE
TP THRM OL	120VAC CONTROL POWER
TP THRM OL	TREATMENT PUMP MOTOR THERMAL OVERLOAD WIRED TO VFD, VIEWED OVER ETHERNET
LVL TRANS	24VDC CONTROL POWER
LVL TRANS	LEVEL TRANSMITTER 4-20mA SIGNAL
LVL TRANS	LEVEL TRANSMITTER SHIELD WIRE

THIS PRINT AND ITS CONTENTS ARE THE PROPERTY OF FLITEWAY AND MUST NOT BE USED FOR ANY PURPOSE NOT AUTHORIZED BY FLITEWAY. DO NOT DISCLOSE, REPRODUCE OR OTHERWISE USE THIS PRINT OR ITS CONTENTS IN ANY MANNER DETRIMENTAL TO THE INTEREST OF FLITEWAY WITHOUT FLITEWAY'S PRIOR WRITTEN CONSENT. FLITEWAY RESERVES ALL RIGHTS OF DESIGN AND INVENTION TO THE EXTENT PERMITTED BY LAW.

CAD SYSTEM ACADE	UNITS IN	Fliteway Technologies, Inc. 2129 East Birchwood Ave. Cudahy, WI 53110	DRAWN BY Josh	Q # Q14508	DESCRIPTION AS BUILT
SCALE 1:1	FORMAT D		DESIGNED FOR CB&I Federal Services		Drawing Number PAGE 1 OF 1

PLOTTED: 09-16-2015

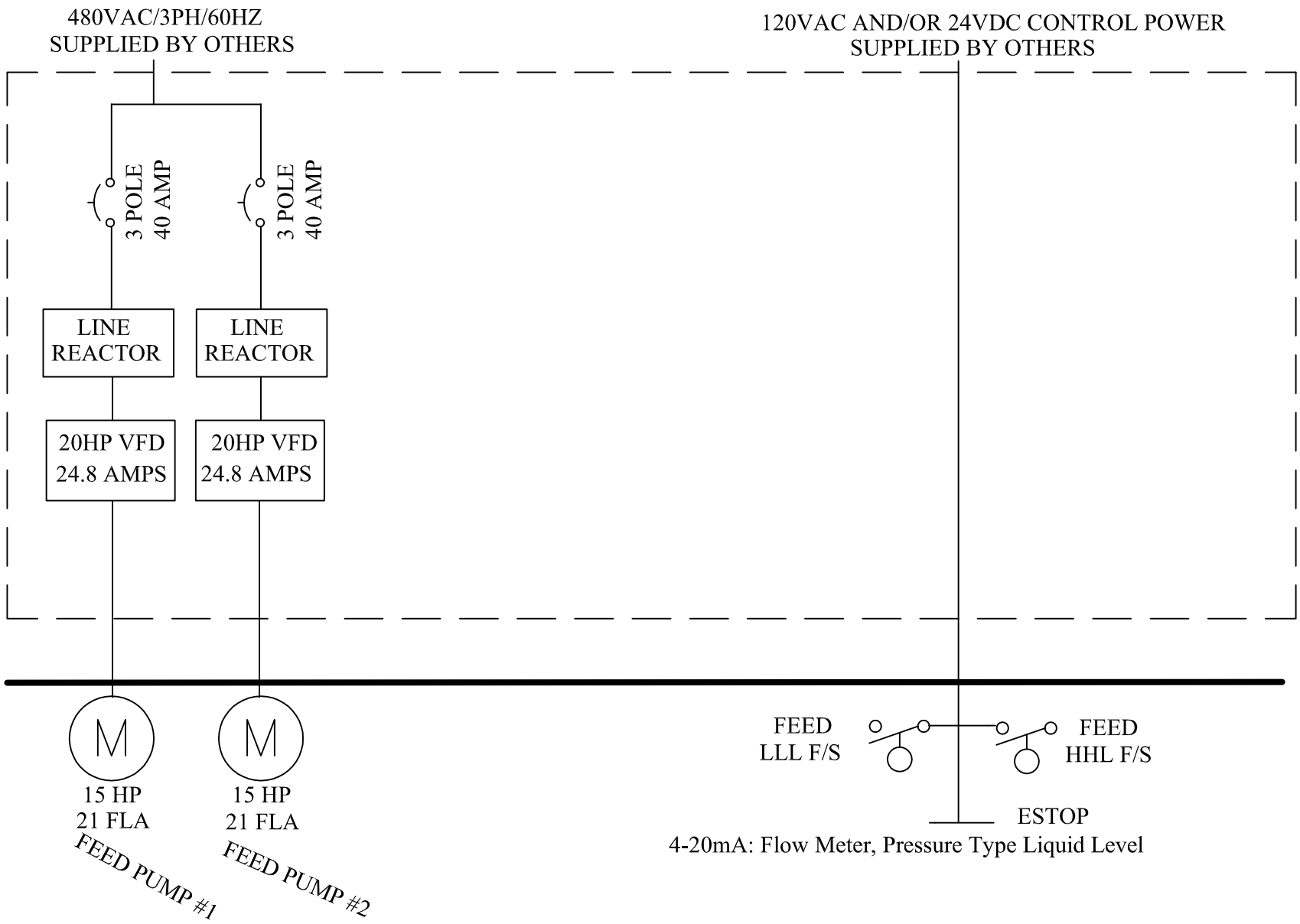

THIS DRAWING IS THE PROPERTY OF
Fliteway Technologies, Inc
2129 East Birchwood Avenue
Cudahy, WI 53110
414.483.5600 414.483.1957
AND IS NOT BE REPRODUCTED
WITH OUT WRITTEN PREMISSION

ONE LINE ELECTRICAL DIAGRAM

FEED PUMP SKID

03/23/15

CB&I Federal Services

SIZE	FSCM NO.	DWG NO.	REV
		Q14508	5
SCALE NONE			SHEET

Technical Data

Allen-Bradley

PowerFlex 700 Adjustable Frequency AC Drive

Topic	Page
Product Overview	2
Certifications and Specifications	7
Design Considerations	12
Drive, Fuse and Circuit Breaker Ratings	24
Cable Recommendations	33
Power Wiring	34
I/O Wiring	44
Mounting	49
Dimensions and Weights	53
PowerFlex 700 Packaged Drives	77
Drive Options	78

LISTEN.
THINK.
SOLVE.®

Allen-Bradley • Rockwell Software

Rockwell Automation

Additional Resources

These documents contain additional information concerning related products from Rockwell Automation.

Resource	Description
PowerFlex 700 Adjustable Frequency AC Drive Installation Instructions – Frames 0…6, publication 20B-IN0019	Provides detailed information about installation and start-up.
PowerFlex 700 Adjustable Frequency AC Drive Installation Instructions – Frames 7…10, publication 20B-IN0014	
PowerFlex 700 Standard Control User Manual, publication 20B-UM001	Provides detailed information on: • Parameters and programming • Faults, alarms, and troubleshooting
PowerFlex 700 Vector Control User Manual (v4.001 & up), publication 20B-UM002	
PowerFlex 70 and PowerFlex 700 Reference Manual, publication PFLEX-RM001	Provides detailed application specific information for programming and configuring the PowerFlex 700 drive.
PowerFlex 70 Enhanced Control and PowerFlex 700 Vector Control Reference Manual, publication PFLEX-RM004	
Wiring and Grounding Guidelines for Pulse Width Modulated (PWM) AC Drives, publication DRIVES-IN001	Provides basic information needed to properly wire and ground PWM AC drives.
Safety Guidelines for the Application, Installation and Maintenance of Solid State Control, publication SGI-1.1	Provides general guidelines for the application, installation, and maintenance of solid-state control.
Preventive Maintenance of Industrial Control and Drive System Equipment, publication DRIVES-TD001	Provides a guide to performing preventive maintenance.
Guarding Against Electrostatic Damage, publication 8000-4.5.2	Provides practices for guarding against electrostatic damage (ESD).
Product Certifications website, http://ab.com	Provides declarations of conformity, certificates, and other certification details.

You can view or download publications at http://www.rockwellautomation.com/literature/. To order paper copies of technical documentation, contact your local Allen-Bradley distributor or Rockwell Automation sales representative.

Product Overview

The PowerFlex 700 AC drive offers outstanding performance in an easy-to-use drive that you have come to expect from Rockwell Automation. This world-class performance comes in a small and competitively priced package. The PowerFlex 700 AC drive is designed to control three-phase induction motors in applications with requirements ranging from the simplest speed control to the most demanding torque control. The drive has volts per hertz, sensorless vector and vector control. Vector control includes Allen-Bradley's patented Force™ Technology which provides world class motor control.

Flexible Packaging and Mounting

- **IP20, NEMA / UL Type 1** – For conventional mounting inside or outside a control cabinet. Conduit plate is removable for easy installation and replacement without disturbing conduit.
- **IP54, NEMA / UL Type 12** – Stand-alone, wall mount drives are available for dust tight applications with power ratings from 75 to 200 Hp (Frames 5 & 6).
- **IP54, NEMA / UL Type 12** – Flange mount drives with an IP00, NEMA / UL Type Open front. These can be installed in a user supplied cabinet to meet IP54, NEMA / UL Type 12. This allows the majority of heat to be exhausted out the back of the cabinet while keeping the cabinet protected. Power ratings range from 75 to 700 Hp (Frames 5...10).
- **Zero Stacking**™ – Frame 0...6 drives can be mounted next to each other with no reduction of surrounding air temperature rating (50°C). This unique bookshelf design also allows access to one drive without disturbing another.

Space Saving Hardware Features

- **Integral EMC Filtering** plus built-in DC bus choke common mode cores and common mode capacitors provides a compact, all-in-one package solution for meeting EMC requirements, including CE in Europe. Frames 0...6 only (Frames 7...10 meet CE when installed per recommendations).
- **Internal Communications** allow the user to integrate the drive into the manufacturing process. Status indicators for all internal communication options are visible on the cover for easy setup and monitoring of drive communications. Users can easily manage information from shop floor to top floor and seamlessly integrate their complete system as they control, configure and collect data.
- **Integral Dynamic Brake Transistor** delivers a cost effective means of switching regenerative energy without costly external chopper circuits. These internal transistors are available in power ratings from 0.5 to 200 Hp.
- **Internal Dynamic Brake Resistor** (up to 25 Hp) requires no extra panel space, and supplies a large amount of braking torque for short periods.

Easy to Use Human Interface Tools

The PowerFlex 7-Class AC drives provide common Human Interface tools that are familiar and easy to use. These include the LCD Human Interface modules and PC-based configuration tools.

- LCD Human Interface modules provide:
  - Large and easy to read 7 line x 21 character backlit display
  - Variety of languages (English, French, German, Italian, Spanish, Portuguese, Dutch)
  - Alternate function keys for shortcuts to common tasks
  - “Calculator-like” number pad for fast and easy data entry (Full Numeric version only)
  - Control keys for local start, stop, speed, and direction
  - Remote versions for panel mount application

Outstanding Control and Performance

Multiple motor control algorithms allow performance matched to the application need:

- **Volts/Hertz** for simple Fan and Pump applications.
- **Sensorless Vector** for high torque production over a wide speed range.
- **Vector** for outstanding torque regulation and excellent low speed/zero speed performance (w/Vector Control cassette).

The PowerFlex 700 drive's Vector Control uses Allen-Bradley's patented Force™ Technology which provides excellent low-speed performance - whether it is operated with or without feedback. While this industry-leading control provides the highest level of drive performance, it is as easy to use as any general purpose drive available.

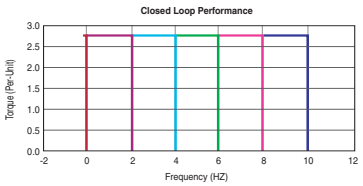

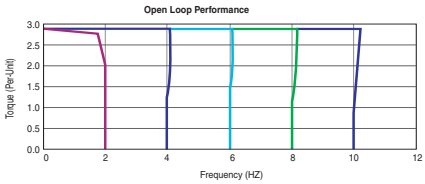

Drives Features

- Fast-acting **Current Limit** and **Bus Voltage Regulation** result in maximum accel/decel without tripping.
- **High speed analog inputs** improve drive response to torque or speed commands.
- **Programming flexibility** allows parameters to be linked within the drive.
- **Flying Start** delivers smooth and instantaneous connection into rotating loads, regardless of commanded direction, without the need for any speed feedback.
- **Integral Process PI Control** can eliminate the need for a separate process loop controller.
- **Inertia Ride-Through** offers tripless operation during a prolonged power outage by using the rotating energy stored in high inertia, low-friction loads.
- **Position Indexer/Speed Profiler** uses a 16 step indexer to provide point-to-point positioning or velocity profiling based on encoder counts, digital inputs, parameter levels or time.
- **TorqProve**™ assures control of the load when transferring control between the drive and a mechanical brake.
- **Speed Regulation** - Open Loop or Closed Loop
  - **Slip Compensation** delivers a minimum 0.5% speed regulation without feedback hardware.
  - **Droop** allows drives to load share without fighting each other.
  - **Encoder Feedback** provides up to 0.001% speed regulation for the tightest application requirements.
- **Torque Regulation** - Open Loop or Closed Loop
  - **Open Loop** torque regulation provides ±5% regulation.
  - **Encoder Feedback** provides ±2% regulation and the ability to hold full load at zero speed.

Unsurpassed Capability in Network Communications

PowerFlex drives are fully compatible with the wide variety of Allen-Bradley DPI™ communication adapters, offering the following benefits:

BACnet®	ControlNet™	DeviceNet™	EtherNet/IP™	LonWorks™	Modbus RTU	PROFIBUS™	Remote I/O (1)	RS485 DF1	USB	Description
	✔	✔	✔							**(Unconnected Messaging)** permits other network devices (e.g. PanelView™) to communicate directly to a drive without routing the communication through the network scanner.
✔	✔	✔	✔					✔	✔	**Adapter Routing** - Plug PC into one drive and talk to all other Allen-Bradley drives on same network, without being routed through network scanner.
✔	✔	✔	✔	✔	✔	✔	✔	✔	✔	Access to 100% of all parameters over the network.
✔		✔	✔			✔				**AutoBaud** capability makes initial connections less problematic.
		✔								**Change of State** significantly reduces network traffic by configuring control messages to be sent only upon customer defined states. Very flexible configuration for each node (Example: "reference must change by more than 5%").
		✔	✔							**Peer Control** provides master-slave type control between drives, where one or more slave drives (consumers) can run based on the status of a master drive (producer), which can also significantly reduce network traffic.
		✔								**ADR (Automatic Device Replacement)** saves significant time and effort when replacing a drive, by allowing the scanner to be configured to automatically detect a new drive and download the required parameter settings.
✔	✔	✔	✔	✔	✔	✔	✔	✔	✔	**Flexible Fault Configuration** - Adapters can be programmed to take fault based actions as ramp to stop, coast-to-stop and hold last state, as well as send user configurable logic control and speed reference values. In addition, different actions can be taken based on whether the network experienced a serious problem (broken cable etc.) versus network idle condition (PLC set to "Program").

(1) This item has Silver Series status. For information, refer to http://www.ab.com/silver.

Catalog Number Explanation

20B	D	2P1	A	3	A	Y	N	A	E	C	0	NN	AD
a	*b*	*c1…c5*	*d*	*e*	*f*	*g*	*h*	*i*	*j*	*k*	*l*	*m*	*n*

a

Drive	
Code	Type
20B	PowerFlex 700

b

Voltage Rating				
Code	Voltage	Ph.	Prechg.	Frames
B	240V AC	3	-	0…6
C	400V AC	3	-	0…10
D	480V AC	3	-	0…10
E	600V AC	3	-	0…6
F	690V AC	3	-	5…6
H	540V DC	-	N	5…6, 10
J	650V DC	-	N	5…6, 10
N	325V DC	-	Y	5…6
P	540V DC	-	Y	5…9
R	650V DC	-	Y	5…9
T	810V DC	-	Y	5…6
W	932V DC	-	Y	5…6

c1

ND Rating				
208/240V, 60 Hz Input				
Code	208V Amps	240V Amps	Hp	Frame
2P2	2.5	2.2	0.5	0
4P2	4.8	4.2	1.0	0
6P8	7.8	6.8	2.0	1
9P6	11	9.6	3.0	1
015	17.5	15.3	5.0	1
022	25.3	22	7.5	1
028	32.2	28	10	2
042	48.3	42	15	3
052	56	52	20	3
070	78.2	70	25	4
080	92	80	30	4
104	120	104	40	5
130	130	130	50	5
154	177	154	60	6
192	221	192	75	6
260	260	260	100	6

c2

ND Rating			
400V, 50 Hz Input			
Code	Amps	kW	Frame
1P3	1.3	0.37	0
2P1	2.1	0.75	0
3P5	3.5	1.5	0
5P0	5.0	2.2	0
8P7	8.7	4.0	0
011	11.5	5.5	0
015	15.4	7.5	1
022	22	11	1
030	30	15	2
037	37	18.5	2
043	43	22	3
056	56	30	3
072	72	37	3
085	85	45	4
105	105	55	5
125	125	55	5
140	140	75	5
170	170	90	6
205	205	110	6
260	260	132	6
292	292	160	7
325	325	180	7
365	365	200	8
415	415	240	8
481	481	280	8
535	535	300	8
600	600	350	8
730	730	400	9
875	875	500	10

c3

ND Rating			
480V, 60 Hz Input			
Code	Amps	Hp	Frame
1P1	1.1	0.5	0
2P1	2.1	1.0	0
3P4	3.4	2.0	0
5P0	5.0	3.0	0
8P0	8.0	5.0	0
011	11	7.5	0
014	14	10	1
022	22	15	1
027	27	20	2
034	34	25	2
040	40	30	3
052	52	40	3
065	65	50	3
077	77	60	4
096	96	75	5
125	125	100	5
156	156	125	6
180	180	150	6
248	248	200	6
292	292	250	7
325	325	250	7
365	365	300	8
415	415	350	8
481	481	400	8
535	535	450	8
600	600	500	8
730	730	600	9
875	875	700	10

c4

ND Rating			
600V, 60 Hz Input			
Code	Amps	Hp	Frame
1P7	1.7	1.0	0
2P7	2.7	2.0	0
3P9	3.9	3.0	0
6P1	6.1	5.0	0
9P0	9.0	7.5	0
011	11	10	1
017	17	15	1
022	22	20	2
027	27	25	2
032	32	30	3
041	41	40	3
052	52	50	3
062	62	60	4
077	77	75	5
099	99	100	5
125	125	125	6
144	144	150	6

20B	D	2P1	A	3	A	Y	N	A	E	C	0	NN	AD
a	*b*	*c1…c5*	*d*	*e*	*f*	*g*	*h*	*i*	*j*	*k*	*l*	*m*	*n*

c5

ND Rating

690V, 50 Hz Input

Code	Amps	kW	Frame
052	52	45	5
060	60	55	5
082	82	75	5
098	98	90	6
119	119	110	6
142	142	132	6

d

Enclosure

Code	Enclosure
A	IP20, NEMA/UL Type 1
F ♠	Open/Flange Mount Front: IP00, NEMA/UL Type Open Back/Heatsink: IP54, NEMA Type 12
N ♣	Open/Flange Mount Front: IP00, NEMA/UL Type Open Back/Heatsink: IP54, NEMA 12
G ♠	Stand-Alone/Wall Mount IP54, NEMA/UL Type 12
U	Roll-In Front: IP00, NEMA/UL Type Open Back/Heatsink: IP54, NEMA 12 Frames 8 & 9 Only

♠ Only available for Frame 5 & Frame 6 drives, 400…690V.

♣ Only available for Frames 7…10.

e

HIM

Code	Operator Interface
0	Blank Cover
3	LCD Display, Full Numeric Keypad
J ♦	Remote (Panel Mount), IP66, NEMA/UL Type 12 Full Numeric LCD HIM
K ♦	Remote (Panel Mount), IP66, NEMA/UL Type 12 Prog. Only LCD HIM

♦ Available with Frames 5…6 Stand-Alone IP54 drives (Enclosure Code "G").

f

Documentation

Code	Type
A	Manual
N	No Manual
Q	No Shipping Package (Internal Use Only)

g

Brake

Code	w/Brake IGBT ‡
Y	Yes
N	No

‡ Brake IGBT is standard on Frames 0-3, optional on Frames 4-6 and not available on Frames 7…10.

h

Internal Braking Resistor

Code	w/Resistor
Y	Yes ★
N	No

★ Not available for Frame 3 drives or larger.

i

Emission

Code	CE Filter §	CM Choke
A	Yes	Yes
B #	Yes	No
N	No	No

§ Note: 600V class drives below 77 Amps (Frames 0-4) are declared to meet the Low Voltage Directive. It is the responsibility of the user to determine compliance to the EMC directive. Frames 7…10, 400/480V AC drives (Voltage Rating codes "C" and "D") meet CE certification requirements when installed per recommendations.

Only available for 208…240V Frame 0-3 drives.

j

Comm Slot

Code	Network Type
C	ControlNet (Coax)
D	DeviceNet
E	EtherNet/IP
N	None

k

Control & I/O

Code	Control	I/O Volts
A	Standard ♦	24V DC/AC
B	Standard ♦	115V AC
C	Vector △	24V DC
D	Vector △	115V AC
N	Standard	None

△ Vector Control Option utilizes DPI Only.

♦ Frame 0…6 drives only.

l

Feedback

Code	Type
0	None
1	Encoder, 12V/5V

m

Future Use

n

Special Firmware (Frames 0…6 Only)

Code	Type
AD ♦	60 Hz Maximum
AE ♦	Cascading Fan/Pump Control
AX ♦	82 Hz Maximum
BA ♦	Pump Off (for pump jack)

♦ Must be used with Vector Control option C or D (Position k). Positions m-n are only required when custom firmware is supplied.

Certifications and Specifications

Certifications

Certification[1]	Description	Frames 0…4 230…480V	Frames 0…4 600V	Frames 5…6	Frames 7…10
ABS	American Bureau of Shipping MA Certificate 08-HS303172B-3-PDA for auxiliary services on AB Classed vessels and offshore platforms	✔		✔	
CE	Certified by Rockwell Automation to be in conformity with the essential requirements of the applicable European Directives and the standards referenced below have been applied:				
	2006/95/EC (Low Voltage Directive) EN 50178 Electronic Equipment for use in Power Installations	✔	✔	✔	✔
	2004/108/EC (EMC Directive) EN 61800-3 Adjustable Speed electrical power drive systems - Part 3: EMC requirements and specific test methods.	✔		✔	✔[2]
RCM	Certified by Rockwell Automation to be in conformity with the requirements of the applicable Australian legislation and the standards referenced: IEC 61800-3.	✔		✔	✔
c-UL-us	Listed to UL508C and C22.2 No. 14. Packaged drives may be listed to UL508A.	✔	✔	✔	✔
EAC	Low Voltage TR CU 004/2011 EMC TR CU 020/2011	✔	✔	✔	✔
EPRI /SEMIF47	EPRI Quality Star Certificates SEMIF47.115 and SEMIF47.127 for SEMI F47 compliance, only 480V units tested	✔		✔	
Functional Safety	EC-Type-Examination Certificate TUV 05 ATEX 7153 for directive 94/9/EC: Safe turn off of certified ATEX motors used in Group II Category (2) GD potentially explosive atmospheres.	✔	✔	✔	✔
Korean KC Registration	KCC-REM-RAA-20B Refer to the certificate of registration for specific drive catalog numbers that have this certification.	✔	✔	✔	✔
Lloyd's Register	Lloyd's Register Type Approval Certificate 08-HS303172B-3-PDA (marine certification)	✔		✔	
Trentec	Tested by Trentec to be compliant with AC156 Acceptance Criteria for Seismic Qualification Testing of Nonstructural Components and 2003 International Building Code for worst-case seismic level for USA excluding site class F	✔	✔	✔	
Designed to Meet Applicable Requirements	CMAA Specification #70 (Crane Manufacturers of America Assoc.)	✔	✔	✔	✔
	NFPA 70 – US National Electrical Code	✔	✔	✔	✔
	NEMA ICS 7.1 – Safety Standards for Construction and Guide for Selection, Installation, and Operation of Adjustable Speed Drive Systems	✔	✔	✔	✔
	IEC 61800-2 – Adjustable Speed Electrical Power Drive Systems - Part 2: General Requirements - Rating specifications for low voltage adjustable frequency AC power drive systems.	✔	✔	✔	✔

(1) See the product certifications website, http://www.rockwellautomation.com/products/certification for declarations of conformity, certificates, and other certification details.

(2) Frames 7…10 provided as IP00 or NEMA / UL Open style must be installed in a supplementary enclosure which provides adequate attenuation of radiated emissions in order to be compliant with EN 61800-3.

Environmental

Category	Specification	
Environment	Altitude:	1000 m (3300 ft) max. without derating
	Maximum Surrounding Air Temperature without Derating - IP20, NEMA / UL Type Open: Frames 0…6 Frames 7…10	 0…50 °C (32…122 °F), typical. See Installation Instructions for details. 0…40 °C (32…104 °F) for chassis (heatsink) 0…65 °C (32…149 °F) for control (front of backplane)
	Storage Temperature (all const.):	-40…70 °C (-40…158 °F)
	Atmosphere:	**Important:** Drive **must not** be installed in an area where the ambient atmosphere contains volatile or corrosive gas, vapors or dust. If the drive is not going to be installed for a period of time, it must be stored in an area where it will not be exposed to a corrosive atmosphere.
	Relative Humidity:	5 to 95% non-condensing
	Shock:	15G peak for 11ms duration (±1.0 ms)
	Vibration:	0.152 mm (0.006 in.) displacement, 1G peak
	Surrounding Environment Pollution Degree Pollution Degree 1 & 2: Pollution Degree 3 & 4: (See page 11 for descriptions of each pollution degree rating.)	 All enclosures acceptable. Enclosure that meets or exceeds IP54, NEMA / UL Type 12 required.

Sound:

Frame	Fan Velocity	Sound Level	
0	30 CFM	58 dB	Note: Sound pressure level is measured at 2 meters.
1	30 CFM	59 dB	
2	50 CFM	57 dB	
3	120 CFM	61 dB	
4	190 CFM	59 dB	
5	200 CFM	71 dB	
6	300 CFM	72 dB	
7	756 CFM	74 dB	
8	1200 CFM	78 dB	
9	2800 CFM	82 dB	
10 Inv.	1850 CFM	78 dB	
10 Cnv.	1200 CFM	78 dB	

Technical Specifications

Category	Specification						
Protection	**Drive**	200…208V	240V	380/400V	480V	600V Frames 0…4	600/690V Frames 5…6
	AC Input Overvoltage Trip:	285V AC	285V AC	570V AC	570V AC	716V AC	818V AC
	AC Input Undervoltage Trip:	120V AC	138V AC	233V AC	280V AC	345V AC	345V AC
	Bus Overvoltage Trip:	405V DC	405V DC	810V DC	810V DC	1013V DC	1162V DC
	Bus Undervoltage Shutoff/Fault:	153V DC	153V DC	305V DC	305V DC	381V DC	437V DC
	Nominal Bus Voltage:	281V DC	324V DC	540V DC	648V DC	810V DC	932V DC
	All Drives						
	Heat Sink Thermistor:	Monitored by microprocessor overtemp trip					
	Drive Overcurrent Trip Software Overcurrent Trip: Hardware Overcurrent Trip:	 200% of rated current (typical) 220…300% of rated current (dependent on drive rating)					
	Line transients:	up to 6000 volts peak per IEEE C62.41-1991					
	Control Logic Noise Immunity:	Showering arc transients up to 1500V peak					
	Power Ride-Thru:	15 milliseconds at full load					
	Logic Control Ride-Thru:	0.5 seconds minimum, 2 seconds typical					
	Ground Fault Trip:	Phase-to-ground on drive output					
	Short Circuit Trip:	Phase-to-phase on drive output					
Electrical	Voltage Tolerance:	See page 12 for full power and operating range					
	Input Frequency Tolerance:	47…63 Hz					
	Input Phases:	Three-phase input provides full rating for all drives. Single-phase operation possible on certain drives and provides 50% of rated current (see Installation Instructions for details). Frames 0…7: Drive can be supplied as 6 pulse or 18 pulse in an engineered package.					
	Displacement Power Factor:	0.98 across entire speed range					
	Efficiency:	97.5% at rated amps, nominal line volts					
	Maximum Short Circuit Rating:	200,000 Amps symmetrical					
	Actual Short Circuit Rating:	Determined by AIC rating of installed fuse/circuit breaker					
	Drive to Motor Power Ratio Minimum Maximum	 Recommended not less than 1:2 ratio Recommended not greater than 2:1 ratio					

Category	Specification	
Control	Method:	Sine coded PWM with programmable carrier frequency. Ratings apply to all drives (refer to the *Derating Guidelines* in the PowerFlex Reference Manual). The drive can be supplied as 6 pulse or 18 pulse in a configured package.
	Carrier Frequency:	2, 4, 8, and 10 kHz. Drive rating based on 4 kHz. See the Input Protection Device tables in the Installation Instructions for exceptions.
	Output Voltage Range:	0 to rated motor voltage
	Output Frequency Range:	Standard Control – 0 to 400 Hz., Vector Control – 0 to 420 Hz
	Frequency Accuracy Digital Input: Analog Input:	 Within ±0.01% of set output frequency Within ±0.4% of maximum output frequency
	Frequency Control:	Speed Regulation - w/Slip Compensation (Volts per Hertz Mode) 0.5% of base speed across 40:1 speed range, 40:1 operating range 10 rad/sec bandwidth
		Speed Regulation - w/Slip Compensation (Sensorless Vector Mode) 0.5% of base speed across 80:1 speed range, 80:1 operating range 20 rad/sec bandwidth
		Speed Regulation - w/Feedback (Sensorless Vector Mode) 0.1% of base speed across 80:1 speed range, 80:1 operating range 20 rad/sec bandwidth
	Speed Control:	Speed Regulation - w/o Feedback (Vector Control Mode) 0.1% of base speed across 120:1 speed range, 120:1 operating range 50 rad/sec bandwidth
		Speed Regulation - w/Feedback (Vector Control Mode) 0.001% of base speed across 120:1 speed range, 1000:1 operating range, 250 rad/sec bandwidth
	Torque Regulation:	Torque Regulation - w/o Feedback ±5%, 600 rad/sec bandwidth
		Torque Regulation - w/Feedback ±2%, 2500 rad/sec bandwidth
	Selectable Motor Control:	Sensorless Vector with full tuning. Standard V/Hz with full custom capability. PF700 adds Vector Control.
	Stop Modes:	Multiple programmable stop modes including - Ramp, Coast, DC-Brake, Ramp-to-Hold and S-curve.
	Accel/Decel:	Two independently programmable accel and decel times. Each time may be programmed from 0…3600 seconds in 0.1 second increments.
	Intermittent Overload:	110% Overload capability for up to 1 minute, 150% Overload capability for up to 3 seconds.
	Current Limit Capability:	Proactive Current Limit programmable from 20…160% of rated output current. Independently programmable proportional & integral gain.
	Motor Overload Protection Frames 0…6 Standard Control:	 PowerFlex 700 drives with standard control, identified by an N, A, or B in position 15 of the catalog number, only provide Class 10 motor overload protection according to NEC article 430. They do not provide speed sensitive overload protection, thermal memory retention and motor over-temperature sensing according to NEC article 430.126 (A) (2). If such protection is needed in the end-use product, it must be provided by additional means.
	Frames 0…6 Vector Control:	PowerFlex 700 drives with vector control, identified by a C or D in position 15 of the catalog number, provide class 10 motor overload protection according to NEC article 430 and motor over-temperature protection according to NEC article 430.126 (A) (2). UL 508C File E59272.
	Frames 7…10 Vector Control:	Class 10 motor overload protection according to NEC article 430 and motor over-temperature protection according to NEC article 430.126 (A)(2). UL 508C File E59272.

Category	Specification						
Control (continued)	Digital/Analog Input Latency	Signal		Motor Control	Latency		
					Min.	Max	Typical
		Digital Input	Start	FVC	8.4 ms	10.4 ms	8.4 ms
				SVC	9.2 ms	16.0 ms	9.2 ms
			Stop	FVC	10.0 ms	12.4 ms	10.4 ms
				SVC	10.0 ms	12.0 ms	10.4 ms
		Analog Input	Torque 4 kHz PWM	FVC	772 µs	1.06 ms	840 µs
			Torque 2 kHz PWM	FVC	1.008 ms	1.46 ms	1.256 ms
			Speed	FVC	4.6 ms	8.6 ms	4.8 ms
			Speed	SVC	4.8 ms	12.4 ms	6.4 ms
Encoder	Type:	Incremental, dual channel					
	Supply:	12V, 250 mA. 12V, 10 mA minimum inputs isolated with differential transmitter, 250 kHz maximum.					
	Quadrature:	90°, ±27 degrees at 25 degrees C.					
	Duty Cycle:	50%, +10%					
	Requirements:	Encoders must be line driver type, quadrature (dual channel) or pulse (single channel), 8…15V DC output (4…6V DC when jumpers are in 5V position), single-ended or differential and capable of supplying a minimum of 10 mA per channel. Maximum input frequency is 250 kHz. The Encoder Interface Board accepts 12V DC square-wave with a minimum high state voltage of 7.0V DC. With the jumpers in the 5V position, the encoder will accept a 5V DC square-wave with a minimum high state voltage of 3.0V DC. In either jumper position, the maximum low state voltage is 0.4V DC.					

Pollution Degree Ratings According to EN 61800-5-1

Pollution Degree	Description
1	No pollution or only dry, non-conductive pollution occurs. The pollution has no influence.
2	Normally, only non-conductive pollution occurs. Occasionally, however, a temporary conductivity caused by condensation is to be expected, when the drive is out of operation.
3	Conductive pollution or dry non-conductive pollution occurs, which becomes conductive due to condensation, which is to be expected.
4	The pollution generates persistent conductivity caused, for example, by conductive dust, rain or snow.

Design Considerations

Input Voltage Tolerance

Drive Rating	Nominal Line Voltage	Nominal Motor Voltage	Drive Full Power Range	Drive Operating Range
200…240	200	200*	200…264	180…264
	208	208	208…264	
	240	230	230…264	
380…480	380	380*	380…528	342…528
	400	400	400…528	
	480	460	460…528	
500…600 (Frames 0…4 Only)	600	575*	575…660	432…660
500…690 (Frames 5 & 6 Only)	600	575*	575…660	475…759
	690	690	690…759	475…759

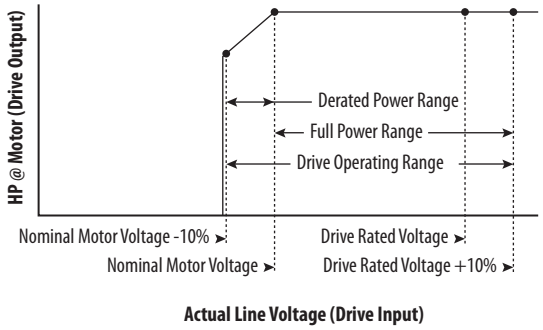

Drive Full Power Range = Nominal Motor Voltage to Drive Rated Voltage +10%.
Rated current is available across the entire Drive Full Power Range

Drive Operating Range = Lowest* Nominal Motor Voltage –10% to Drive Rated Voltage +10%.
Drive Output is linearly derated when Actual Line Voltage is less than the Nominal Motor Voltage

EXAMPLE Calculate the maximum power of a 5 Hp, 460V motor connected to a 480V rated drive supplied with 342V Actual Line Voltage input.

- Actual Line Voltage / Nominal Motor Voltage = 74.3%
- 74.3% × 5 Hp = 3.7 Hp
- 74.3% × 60 Hz = 44.6 Hz

At 342V Actual Line Voltage, the maximum power the 5 Hp, 460V motor can produce is 3.7 Hp at 44.6 Hz.

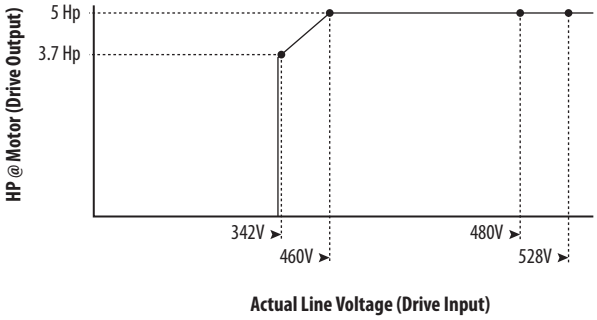

Approximate Watts Loss

The following tables list the watts loss data for drives running at full load, full speed and default carrier frequency.

Internal watts are those dissipated by the control structure of the drive and will be dissipated into the cabinet regardless of mounting style. External watts are those dissipated directly through the heatsink and will be outside the cabinet for flange mount and inside the cabinet for other mounting types.

Watts Loss – Frames 0…6

Voltage	ND Hp/kW	External Watts	Internal Watts	Total Watts Loss[1]
IP20, NEMA / UL Type 1				
240V	0.5	9	37	46
	1	22	39	61
	2	38	39	77
	3	57	41	98
	5	97	82	179
	7.5	134	74	208
	10	192	77	269
	15	276	92	368
	20	354	82	436
	25	602	96	698
	30	780	96	876
	40	860	107	967
	50	1132	138	1270
	60	1296	200	1496
	75	1716	277	1993
	100	1837	418	2255
400V	0.37	11	42	53
	0.75	19	44	63
	1.5	31	45	76
	2.2	46	46	93
	4	78	87	164
	5.5	115	79	194
	7.5	134	84	218
	11	226	99	326
	15	303	91	394
	18.5	339	102	441
	22	357	103	459
	30	492	117	610
	37	568	148	717
	45	722	207	930
	55	821	286	1107
	55	1130	397	1527
	90	1402	443	1845
	110	1711	493	2204
	132	1930	583	2513

Voltage	ND Hp/kW	External Watts	Internal Watts	Total Watts Loss(1)
480V	0.5	11	42	53
	1	19	44	63
	2	31	45	76
	3	46	46	93
	5	78	87	164
	7.5	115	79	194
	10	134	84	218
	15	226	99	326
	20	303	91	394
	25	339	102	441
	30	357	103	459
	40	492	117	610
	50	568	148	717
	60	722	207	930
	75	821	286	1107
	100	1130	397	1527
	125	1402	443	1845
	150	1711	493	2204
	200	1930	583	2513
600V	0.5	9	37	46
	1	14	40	54
	2	25	40	65
	3	41	42	83
	5	59	83	142
	7.5	83	75	157
	10	109	77	186
	15	177	93	270
	20	260	83	343
	25	291	95	385
	30	324	95	419
	40	459	109	569
	50	569	141	710
	60	630	195	825
	75	1053	308	1361
	100	1467	407	1874
	125	1400	500	1900
	150	1668	612	2280
690V	45	894	141	1034
	55	1056	195	1251
	75	1105	308	1412
	90	1389	407	1796
	110	1283	500	1783
	132	1592	612	2204

Voltage	ND Hp/kW	External Watts	Internal Watts	Total Watts Loss(1)
IP54, NEMA / UL Type 12				
480V	75	873	234	1107
	100	1237	290	1527
	125	1563	282	1845
	150	1874	330	2204
	200	2100	413	2513
600V	75	1091	270	1361
	100	1537	337	1874
	125	1584	316	1900
	150	1895	385	2280

(1) Worst case condition including Vector Control board, HIM, and Communication Module.

Watts Loss – Frames 7…10

Voltage	Frame	Hp Rating		Dissipation (Watts)(1)					
				AC Input			DC Input		
		ND	HD	External	Internal	Total	External	Internal	Total
IP20, NEMA / UL Type 1									
400/480V	7	250	200	3422	514	3936	3098	497	3595
		250	250	4224	618	4842	3848	599	4447
	8	300	250	3125	569	3694	2698	547	3245
		350	300	3588	681	4269	3091	655	3746
		400	350	4284	850	5133	3692	816	4510
		450	400	4850	1000	5850	4178	965	5143
		500	450	5278	2010	7288	4506	1969	6475
	9	600	500	8740	2270	11010	7752	2218	9970
	10	700	600	8595	2339	10934	7470	2280	9750

(1) Worst case condition including Vector Control board, HIM, and Communication Module.

Derating Guidelines

Altitude and Efficiency

Frame	Type	Derate
All	Altitude	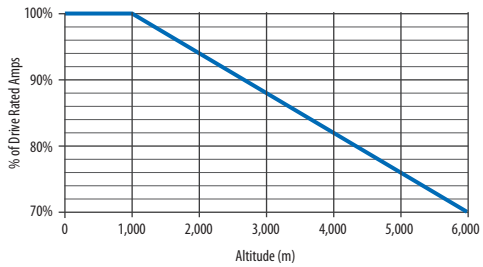

Frame	Type	Derate
All	Efficiency (typical)	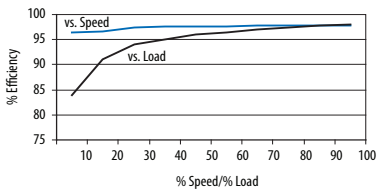

Ambient Temperature/Load – 240V AC

240 Volt Power Rating			Derating — 2 kHz ····· 4 kHz
ND Hp	**HD Hp**	**Cont. Amps**	
0.5…5.0	0.33…3.0	2.2…15.3	None
10…15	7.5…10	28…42	None
25	20	70	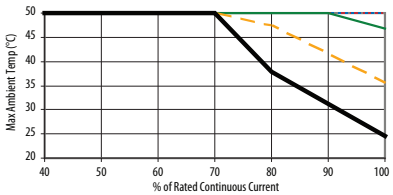
40	30	104 (80)	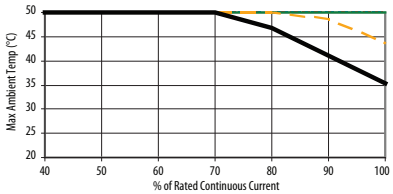
60	50	154 (130)	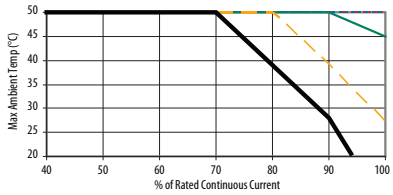
100	75	260 (205)	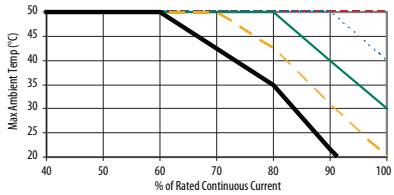

240 Volt Power Rating			Derating — 2 kHz ····· 4 kHz
ND Hp	**HD Hp**	**Cont. Amps**	
7.5	5.0	22	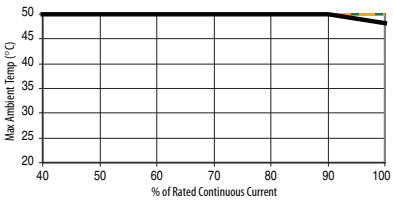
20	15	52	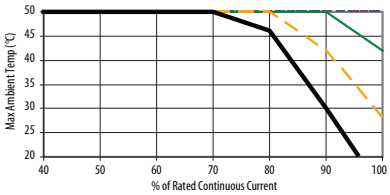
30	25	80	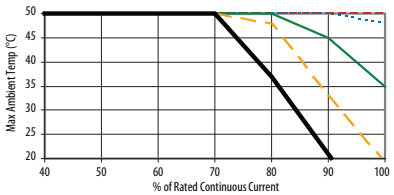
50	40	130 (104)	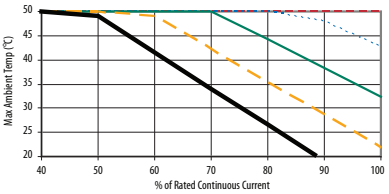
75	60	192 (154)	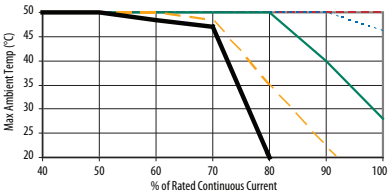

Ambient Temperature/Load – 400V AC

400 Volt Power Rating			Derating 2 kHz, 4 kHz, 6 kHz, 8 kHz, 10 kHz
ND kW	**HD kW**	**Cont. Amps**	
0.37…7.5	0.25…5.5	1.3…15.4	None
15	11	30	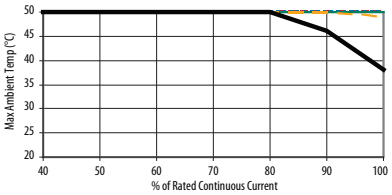
22	18.5	43	None
37	30	72	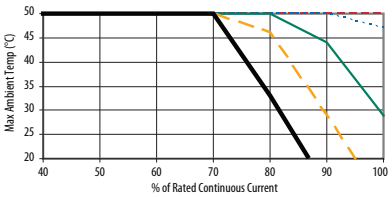
55	45	105 (85)	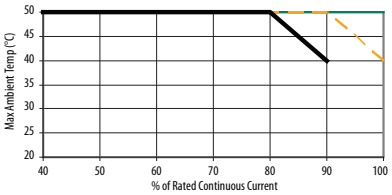
90	75	170 (140)	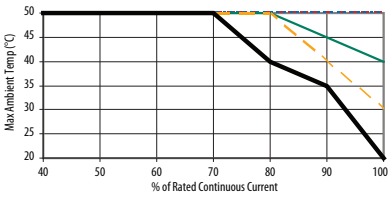
132	110	260 (205)	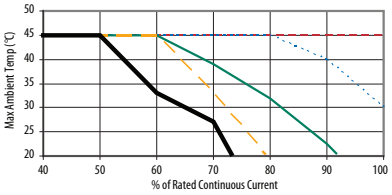

400 Volt Power Rating			Derating 2 kHz, 4 kHz, 6 kHz, 8 kHz, 10 kHz
ND kW	**HD kW**	**Cont. Amps**	
11	7.5	22	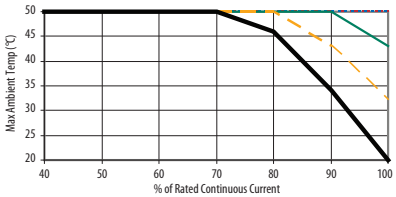
18.5	15	37	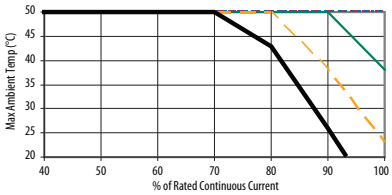
30	22	56	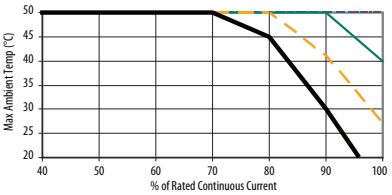
45	37	85 (72)	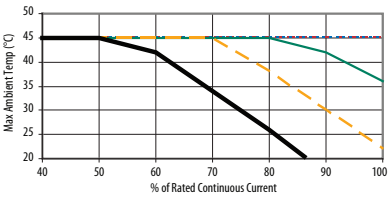
75	55	140 (105)	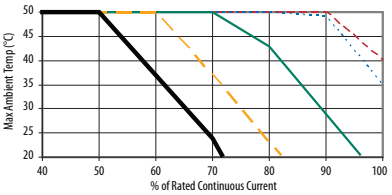
110	90	205 (170)	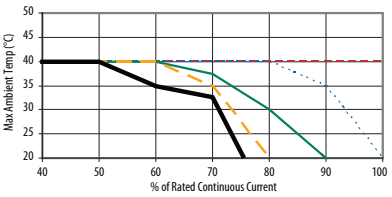
160	150	292 (263)	see 480 Volt, 292 (263) Amp on page 18
180	180	325 (325)	see 480 Volt, 325 (325) Amp on page 19
200	180	365 (325)	see 480 Volt, 365 (325) Amp on page 19
240	200	415 (365)	see 480 Volt, 415 (365) Amp on page 19
280	240	481 (415)	see 480 Volt, 481 (415) Amp on page 19
300	280	535 (481)	see 480 Volt, 535 (481) Amp on page 19
350	300	600 (535)	see 480 Volt, 600 (535) Amp on page 19
400	350	730 (600)	see 480 Volt, 730 (600) Amp on page 19
500	400	875 (700)	see 480 Volt, 875 (700) Amp on page 19

Ambient Temperature/Load – 480V AC

480 Volt Power Rating			
ND Hp	**HD Hp**	**Cont. Amps**	**Derating** 2 kHz, 4 kHz, 6 kHz, 8 kHz, 10 kHz
0.5…10	0.33…7.5	1.1…14	None
20	15	27	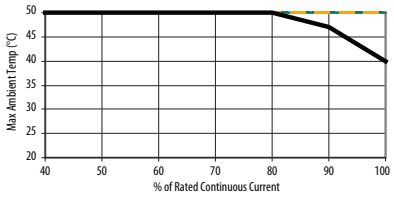
30	25	40	None
50	40	65	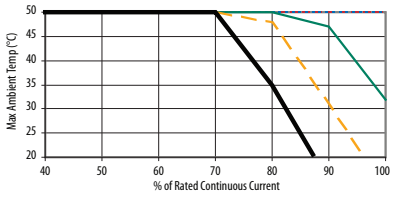
75	60	96 (77)	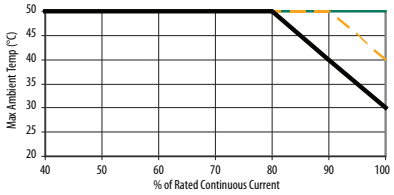
125	100	156 (125)	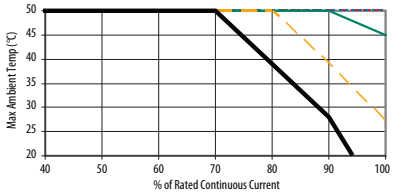
200	150	248 (180)	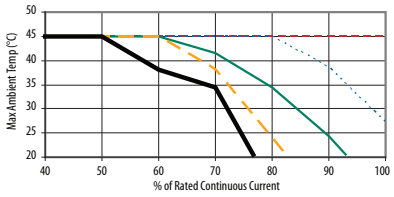

480 Volt Power Rating			
ND Hp	**HD Hp**	**Cont. Amps**	**Derating** 2 kHz, 4 kHz, 6 kHz, 8 kHz, 10 kHz
15	10	22	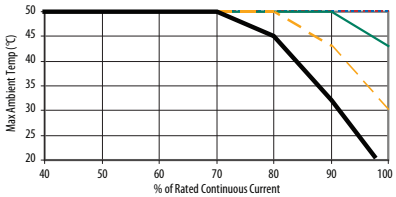
25	20	34	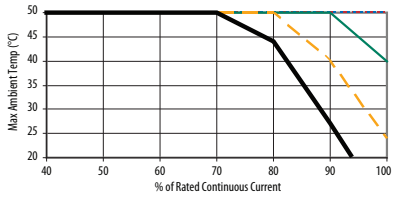
40	30	52	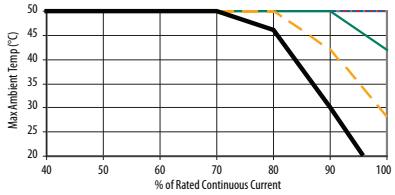
60	50	77 (65)	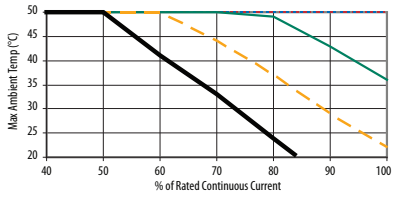
100	75	125 (96)	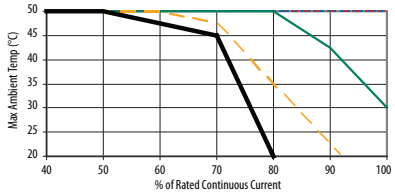
150	125	180 (156)	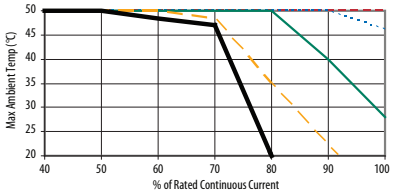
250	200	292 (263)	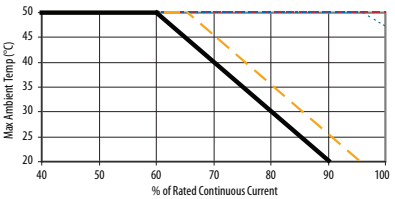

480 Volt Power Rating			Derating
ND Hp	HD Hp	Cont. Amps	2 kHz, 4 kHz, 6 kHz, 8 kHz, 10 kHz
250	250	325 (325)	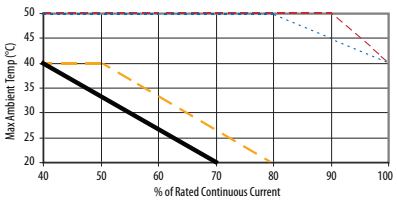
350	300	415 (365)	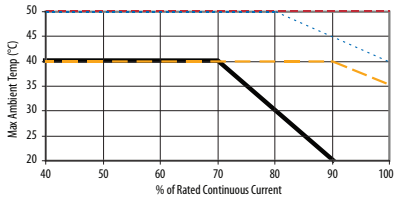
450	400	535 (481)	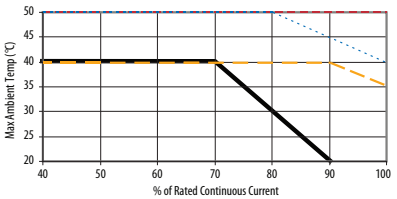
600	500	730 (600)	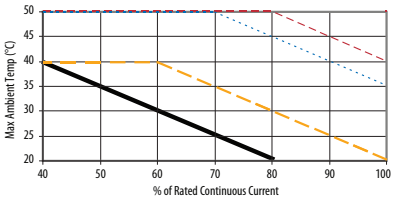

480 Volt Power Rating			Derating
ND Hp	HD Hp	Cont. Amps	2 kHz, 4 kHz, 6 kHz, 8 kHz, 10 kHz
300	250	365 (325)	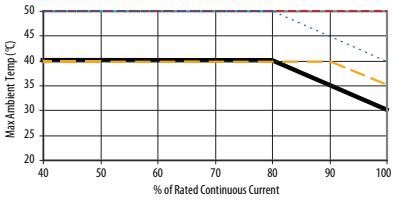
400	350	481 (415)	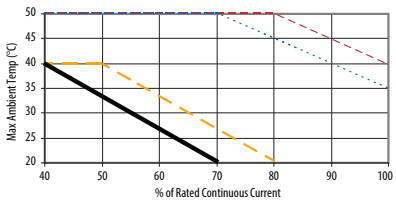
500	450	600 (535)	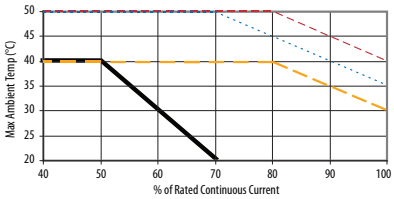
700	600	875 (700)	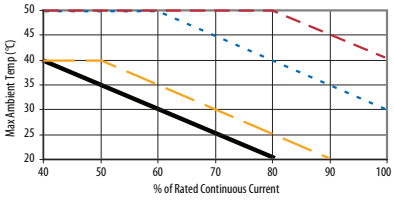

Ambient Temperature/Load – 600V AC

600 Volt Power Rating			Derating — 2 kHz, 4 kHz
ND Hp	**HD Hp**	**Cont. Amps**	
1.0…2.0	0.5…1.0	1.7…2.7	None
5.0	3.0	6.1	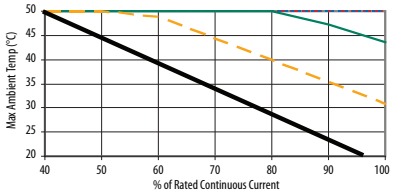
10	7.5	11	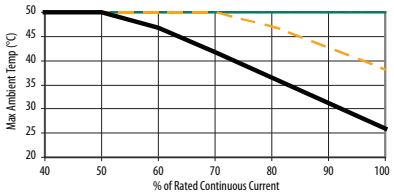
20	15	22	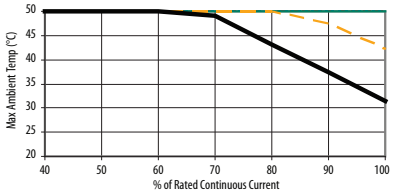
30	25	32	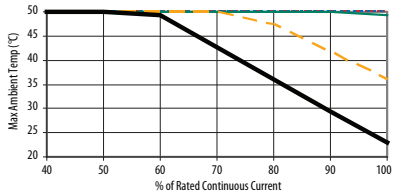
50	40	52	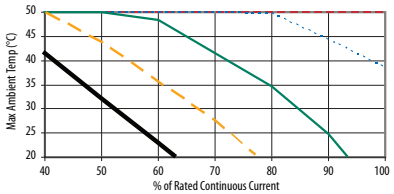
75	60	77 (63)	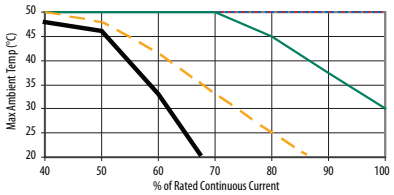

600 Volt Power Rating			Derating — 2 kHz, 4 kHz
ND Hp	**HD Hp**	**Cont. Amps**	
3.0	2.0	3.9	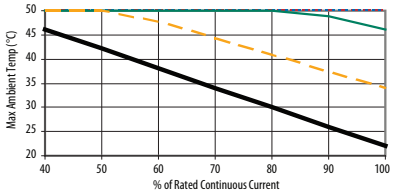
7.5	5.0	9	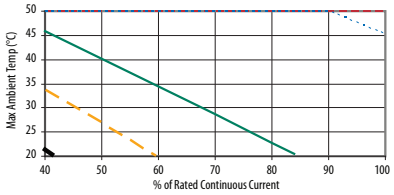
15	10	17	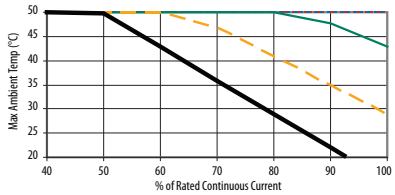
25	20	27	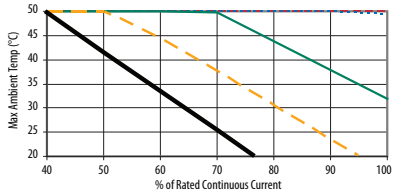
40	30	41	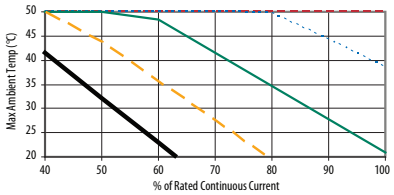
60	50	62	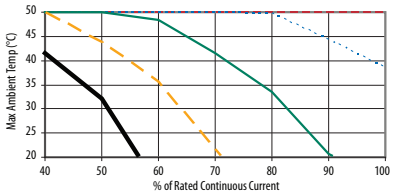
100	75	99 (77)	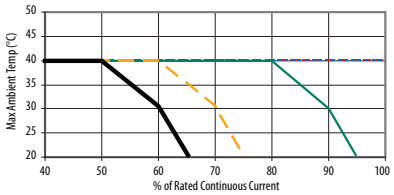

600 Volt Power Rating			Derating — 2 kHz ····· 4 kHz
ND Hp	HD Hp	Cont. Amps	
125	100	125 (99)	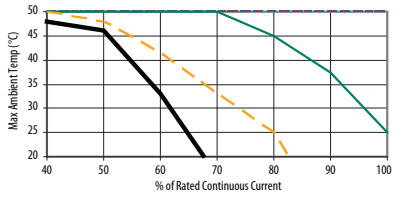

600 Volt Power Rating			Derating — 2 kHz ····· 4 kHz
ND Hp	HD Hp	Cont. Amps	
150	125	144 (125)	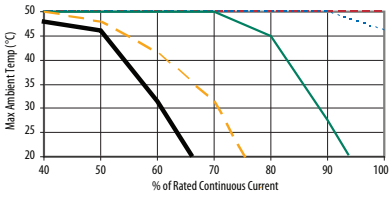

Ambient Temperature/Load – 690V AC

690 Volt Power Rating			Derating — 2 kHz ····· 4 kHz — 6 kHz — 8 kHz ━ 10 kHz
ND kW	HD kW	Cont. Amps	
45…55	37.5…45	52…60 (46…52)	None
90	75	98 (82)	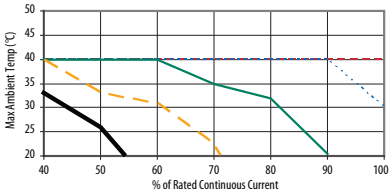
132	110	142 (119)	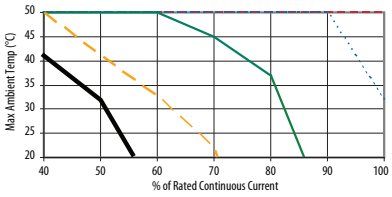

690 Volt Power Rating			Derating — 2 kHz ····· 4 kHz — 6 kHz — 8 kHz ━ 10 kHz
ND kW	HD kW	Cont. Amps	
75	55	82 (60)	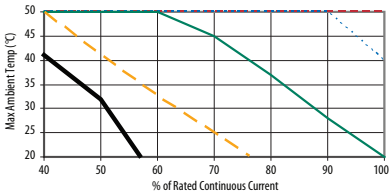
110	90	119 (98)	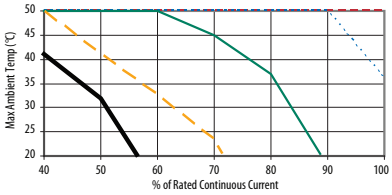

Single-Phase Input Power

The PowerFlex 700 drive is typically used with a three-phase input supply. Single-phase operation is possible with output current derated by 50% (at maximum ambient temperature of 25 °C) of the three-phase ratings.

208/240 Volt Single-Phase AC Input Ratings

240V Single-Phase AC Input						208V Single-Phase AC Input						Temp.
Drive Catalog Number	Frame	Hp Rating	Input Amps	Three-Phase Output		Drive Catalog Number	Frame	Hp Rating	Input Amps	Three-Phase Output		
				V AC	Amps					V AC	Amps	°C
20BB2P2	0	0.25	1.5	0-230	1.1	20BB2P2	0	0.25	1.7	0-200	1.3	25
20BB4P2	0	0.5	2.8	0-230	2.1	20BB4P2	0	0.5	3.2	0-200	2.4	25
20BB6P8	1	1	5.1	0-230	3.4	20BB6P8	1	1	5.9	0-200	3.9	25
20BB9P6	1	1.5	7.2	0-230	4.8	20BB9P6	1	1.5	8.3	0-200	5.5	25
20BB015	1	2.5	11.9	0-230	7.7	20BB015	1	2.5	13.6	0-200	8.8	25
20BB022	1	3.75	17.3	0-230	11	20BB022	1	3.75	19.9	0-200	12.7	25
20BB028	2	5	22.2	0-230	14	20BB028	2	5	25.7	0-200	16.1	25
20BB042	3	7.5	33.4	0-230	21	20BB042	3	7.5	38.5	0-200	24.2	25
20BB052	3	10	41.3	0-230	26	20BB052	3	10	44.6	0-200	28	25
20BB070	4	12.5	55.6	0-230	35	20BB070	4	12.5	62.3	0-200	39.1	25
20BB080	4	15	63.6	0-230	40	20BB080	4	15	73.3	0-200	46	25
20BB104	5	20	84.6	0-230	52	20BB104	5	20	97.9	0-200	60	25
20BB130	5	25	105.7	0-230	65	20BB130	5	25	106.1	0-200	65	25
20BB154	6	30	125.2	0-230	77	20BB154	6	30	144.4	0-200	88.5	25
20BB192	6	37.5	156.1	0-230	96	20BB192	6	37.5	180.3	0-200	110.5	25
20BB260	6	50	211.4	0-230	130	20BB260	6	50	212.1	0-200	130	25

380…480 Volt Single-Phase AC Input Ratings

480V Single-Phase AC Input						380…400V Single-Phase AC Input						Temp.
Drive Catalog Number	Frame	Hp Rating	Input Amps	Three-Phase Output		Drive Catalog Number	Frame	kW Rating	Input Amps	Three-Phase Output		
				V AC	Amps					V AC	Amps	°C
20BD1P1	0	0.25	0.7	0-460	0.6	20BC1P3	0	0.2	1	0-400	0.7	25
20BD2P1	0	0.5	1.4	0-460	1.1	20BC2P1	0	0.4	1.6	0-400	1.1	25
20BD3P4	0	1	2.3	0-460	1.7	20BC3P5	0	0.75	2.7	0-400	1.8	25
20BD5P0	0	1.5	3.4	0-460	2.5	20BC5P0	0	1.1	3.9	0-400	2.5	25
20BD8P0	0	2.5	6	0-460	4	20BC8P7	0	2	6.9	0-400	4.4	25
20BD011	0	3.75	8.2	0-460	5.5	20BC011	0	2.75	9.3	0-400	5.8	25
20BD014	1	5	10.9	0-460	7	20BC015	1	3.75	12.5	0-400	7.7	25
20BD022	1	7.5	17.3	0-460	11	20BC022	1	5.5	17.8	0-400	11	25
20BD027	2	10	21.4	0-460	13.5	20BC030	2	7.5	24.6	0-400	15	25
20BD034	2	12.5	27	0-460	17	20BC037	2	9.25	30.3	0-400	18.5	25
20BD040	3	15	31.8	0-460	20	20BC043	3	11	35.2	0-400	21.5	25
20BD052	3	20	41.3	0-460	26	20BC056	3	15	45.9	0-400	28	25
20BD065	3	25	51.6	0-460	32.5	20BC072	3	18.5	59.7	0-400	36	25
20BD077	4	30	62.6	0-460	38.5	20BC085	4	22.5	70.5	0-400	42.5	25
20BD096	5	37.5	78.1	0-460	48	20BC105	5	27.5	87	0-400	52.5	25
20BD125	5	50	101.6	0-460	62.5	20BC125	5	27.5	103.6	0-400	62.5	25
–	–	–	–	–	–	20BC140	5	37.5	117.4	0-400	70	25
20BD156	6	62.5	126.8	0-460	78	20BC170	6	45	142.6	0-400	85	25
20BD180	6	75	146.4	0-460	90	20BC205	6	55	171.9	0-400	102.5	25
20BD248	6	100	201.6	0-460	124	20BC260	6	66	220.6	0-400	130	25

600…690 Volt Single-Phase AC Input Rating

600V Single-Phase AC Input						690V Single-Phase AC Input						Temp.
Drive Catalog Number	Frame	Hp Rating	Input Amps	Three-Phase Output		Drive Catalog Number	Frame	kW Rating	Input Amps	Three-Phase Output		
				V AC	Amps					V AC	Amps	°C
20BE1P7	0	0.5	1.1	0-575	0.9	–	–	–	–	–	–	25
20BE2P7	0	1	1.8	0-575	1.4	–	–	–	–	–	–	25
20BE3P9	0	1.5	2.6	0-575	2	–	–	–	–	–	–	25
20BE6P1	0	2.5	4.6	0-575	3.1	–	–	–	–	–	–	25
20BE9P0	0	3.75	6.7	0-575	4.5	–	–	–	–	–	–	25
20BE011	1	5	8.5	0-575	5.5	–	–	–	–	–	–	25
20BE017	1	7.5	13.3	0-575	8.5	–	–	–	–	–	–	25
20BE022	2	10	17.5	0-575	11	–	–	–	–	–	–	25
20BE027	2	12.5	21.4	0-575	13.5	–	–	–	–	–	–	25
20BE032	3	15	25.4	0-575	16	–	–	–	–	–	–	25
20BE041	3	20	32.6	0-575	20.5	–	–	–	–	–	–	25
20BE052	3	25	41.3	0-575	26	20BF052	5	22.5	43.1	0-690	26	25
20BE062	4	30	50.4	0-575	31	20BF060	5	27.5	49.9	0-690	30	25
20BE077	5	37.5	62.6	0-575	38.5	20BF082	5	37.5	68.4	0-690	41	25
20BE099	5	50	80.5	0-575	49.5	20BF098	5	45	82	0-690	49	25
20BE125	6	62.5	101.6	0-575	62.5	20BF119	6	55	100	0-690	59.5	25
20BE144	6	75	117.1	0-575	72	20BF142	6	66	120.2	0-690	71	25

Drive, Fuse and Circuit Breaker Ratings

The PowerFlex 700 can be installed with input fuses or an input circuit breaker. National and local industrial safety regulations and/or electrical codes can determine additional requirements for these installations.

The tables on the following pages provide recommended AC line input fuse and circuit breaker information. See Fusing and Circuit Breakers below for UL and IEC requirements. Sizes listed are the recommended sizes based on 40 °C (104 °F) and the U.S. NEC. Other country, state, or local codes can require different ratings. Tables with DC link fuse recommendations for DC input drives are also provided.

Fusing

The recommended fuse types are listed below. If available current ratings do not match those listed in the tables provided, choose the next higher fuse rating.

- IEC – BS88 (British Standard) Parts 1 & 2, EN60269-1, Parts 1 & 2[(1)], type gG or equivalent must be used.
- UL – UL Class CC, T, RK1 or J must be used for Frames 0...6.
  UL Class T, RK1, J, or L must be used for Frames 7...10.

Circuit Breakers

The "non-fuse" listings in the following tables include inverse time circuit breakers, instantaneous trip circuit breakers (motor circuit protectors) and 140M self-protected combination motor controllers (Frames 0...6 only). If one of these is chosen as the desired protection method, the following requirements apply:

- IEC – Both types of circuit breakers and 140M self-protected combination motor controllers (Frames 0...6 only) are acceptable for IEC installations.
- UL – Only inverse time circuit breakers and the specified 140M self-protected combination motor controllers (Frames 0...6 only) are acceptable for UL installations.

(1) Typical designations include, but may not be limited to the following; Parts 1 & 2: AC, AD, BC, BD, CD, DD, ED, EFS, EF, FF, FG, GF, GG, GH.

208 Volt AC Input Protection Devices – Frames 0…6

Drive Catalog Number	Frame	Hp Rating		PWM Freq.	Temp. (11)	Input Ratings		Output Amps			Dual Element Time Delay Fuse		Non-Time Delay Fuse		Circuit Breaker (3)	Motor Circuit Protector (4)	140M Motor Protector with Adjustable Current Range (5)(6)			
		ND	HD	kHz	°C	Amps	kVA	Cont.	1 Min.	3 Sec.	Min. (1)	Max. (2)	Min. (1)	Max. (2)	Max. (8)	Max. (8)	Available Catalog Numbers - 140… (7)			Min. Enclosure Vol. (in.^{3}) (14)
20BB2P2	0	0.5	0.33	4	50	1.9	0.7	2.5	2.8	3.8	3	6	3	10	15	3	M-C2E-B25	M-D8E-B25	–	7269
20BB4P2	0	1	0.75	4	50	3.7	1.3	4.8	5.6	7	6	10	6	17.5	15	7	M-C2E-B63	M-D8E-B63	–	7269
20BB6P8	1	2	1.5	4	50	6.8	2.4	7.8	10.4	13.8	10	15	10	30	30	15	M-C2E-C10	M-D8E-C10	M-F8E-C10	7269
20BB9P6	1	3	2	4	50	9.5	3.4	11	12.1	17	12	20	12	40	40	15	M-C2E-C16	M-D8E-C16	M-F8E-C16	7269
20BB015	1	5	3	4	50	15.7	5.7	17.5	19.3	26.3	20	35	20	70	70	30	M-C2E-C20	M-D8E-C20	M-F8E-C20	7269
20BB022	1	7.5	5	4	50	23	8.3	25.3	27.8	38	30	50	30	100	100	30	–	M-D8E-C25	M-F8E-C25	7269
20BB028	2	10	7.5	4	50	29.6	10.7	32.2	38	50.6	40	70	40	125	125	50	–	–	M-F8E-C32	7269
20BB042	3	15	10	4	50	44.5	16	48.3	53.1	72.5	60	100	60	175	175	70	–	–	M-F8E-C45	13630
20BB052	3	20	15	4	50	51.5	17.1	56	64	86	80	125	80	200	200	100	–	–	–	–
20BB070	4	25	20	4	50	72	25.9	78.2	93	124	90	175	90	300	300	100	–	–	–	–
20BB080	4	30	25	4	50	84.7	30.5	92	117	156	110	200	110	350	350	150	–	–	–	–
20BB104 (12)	5	40	–	4	50	113	40.7	120	132	175	150	250	150	475	350	150	–	–	–	–
		–	30	4	50	84.7	30.5	92	138	175	125	200	125	350	300	150	–	–	–	–
20BB130 (12)	5	50	–	4	50	141	44.1	130	143	175	175	275	175	500	375	250	–	–	–	–
		–	40	4	50	113	35.3	104	156	175	125	225	125	400	300	150	–	–	–	–
20BB154 (12)	6	60	–	4	50	167	60.1	177	195	266	225	350	225	500	500	250	–	–	–	–
		–	50	4	50	141	50.9	150	225	300	200	300	200	500	450	250	–	–	–	–
20BB192 (12)	6	75	–	4	50	208	75	221	243	308	300	450	300	600	600	400	–	–	–	–
		–	60	4	50	167	60.1	177	266	308	225	350	225	500	500	250	–	–	–	–
20BB260 (12)	6	100	–	2	45	255	91.9	260	286	390	300	575	300	750	750	400	–	–	–	–
		–	75	2	50	199	71.7	205	305	410	225	450	225	600	600	400	–	–	–	–

See page 29 for notes.

240 Volt AC Input Protection Devices – Frames 0…6

Drive Catalog Number	Frame	Hp Rating		PWM Freq.	Temp. (11)	Input Ratings		Output Amps			Dual Element Time Delay Fuse		Non-Time Delay Fuse		Circuit Breaker (3)	Motor Circuit Protector (4)	140M Motor Protector with Adjustable Current Range (5)(6)			
		ND	HD	kHz	°C	Amps	kVA	Cont.	1 Min.	3 Sec.	Min. (1)	Max. (2)	Min. (1)	Max. (2)	Max. (8)	Max. (8)	Available Catalog Numbers - 140… (7)			Min. Enclosure Vol. (in.^{3}) (14)
20BB2P2	0	0.5	0.33	4	50	1.7	0.7	2.2	2.4	3.3	3	6	3	10	15	3	M-C2E-B25	M-D8E-B25	–	7269
20BB4P2	0	1	0.75	4	50	3.3	1.4	4.2	4.8	6.4	5	8	5	15	15	7	M-C2E-B63	M-D8E-B63	–	7269
20BB6P8	1	2	1.5	4	50	5.9	2.4	6.8	9	12	10	15	10	25	25	15	M-C2E-C10	M-D8E-C10	M-F8E-C10	7269
20BB9P6	1	3	2	4	50	8.3	3.4	9.6	10.6	14.4	12	20	12	35	35	15	M-C2E-C10	M-D8E-C10	M-F8E-C10	7269
20BB015	1	5	3	4	50	13.7	5.7	15.3	16.8	23	20	30	20	60	60	30	M-C2E-C16	M-D8E-C16	M-F8E-C16	7269
20BB022	1	7.5	5	4	50	19.9	8.3	22	24.2	33	25	50	25	80	80	30	–	M-D8E-C25	M-F8E-C25	7269
20BB028	2	10	7.5	4	50	25.7	10.7	28	33	44	35	60	35	100	100	50	–	–	M-F8E-C32	7269
20BB042	3	15	10	4	50	38.5	16	42	46.2	63	50	90	50	150	150	50	–	–	M-F8E-C45	13630
20BB052	3	20	15	4	50	47.7	19.8	52	63	80	60	100	60	200	200	100	–	–	–	–
20BB070	4	25	20	4	50	64.2	26.7	70	78	105	90	150	90	275	275	100	–	–	–	–
20BB080	4	30	25	4	50	73.2	30.5	80	105	140	100	180	100	300	300	100	–	–	–	–
20BB104 (12)	5	40	–	4	50	98	40.6	104	115	175	125	225	125	400	300	150	–	–	–	–
		–	30	4	50	73	30.5	80	120	160	100	175	100	300	300	100	–	–	–	–
20BB130 (12)	5	50	–	4	50	122	50.7	130	143	175	175	275	175	500	375	250	–	–	–	–
		–	40	4	50	98	40.6	104	156	175	125	225	125	400	300	150	–	–	–	–
20BB154 (12)	6	60	–	4	50	145	60.1	154	169	231	200	300	200	600	450	250	–	–	–	–
		–	50	4	50	122	50.7	130	195	260	175	275	175	500	375	250	–	–	–	–
20BB192 (12)	6	75	–	4	50	180	74.9	192	211	288	225	400	225	600	575	250	–	–	–	–
		–	60	4	50	145	60.1	154	231	308	200	300	200	600	450	250	–	–	–	–
20BB260 (12)	6	100	–	2	45	233	96.7	260	286	390	300	575	300	750	750	300	–	–	–	–
		–	75	2	50	169	70.1	205	305	410	225	450	225	600	600	250	–	–	–	–

See page 29 for notes.

400 Volt AC Input Protection Devices – Frames 0…6

Drive Catalog Number	Frame	kW Rating		PWM Freq.	Temp.	Input Ratings		Output Amps			Dual Element Time Delay Fuse		Non-Time Delay Fuse		Circuit Breaker (3)	Motor Circuit Protector (4)	140M Motor Protector with Adjustable Current Range(5)(6)			
		ND	HD	kHz	°C	Amps	kVA	Cont.	1 Min.	3 Sec.	Min. (1)	Max. (2)	Min. (1)	Max. (2)	Max. (8)	Max. (8)	Available Catalog Numbers - 140… (7)			Min. Enclosure Vol. (in.^{3}) (14)
20BC1P3	0	0.37	0.25	4	50 (11)	1.1	0.77	1.3	1.4	1.9	3	3	3	6	15	3	M-C2E-B16	–	–	7269
20BC2P1	0	0.75	0.55	4	50 (11)	1.8	1.3	2.1	2.4	3.2	3	6	3	8	15	3	M-C2E-B25	M-D8E-B25	–	7269
20BC3P5	0	1.5	0.75	4	50 (11)	3.2	2.2	3.5	4.5	6	6	7	6	12	15	7	M-C2E-B40	M-D8E-B40	–	7269
20BC5P0	0	2.2	1.5	4	50 (11)	4.6	3.2	5	5.5	7.5	6	10	6	20	20	7	M-C2E-B63	M-D8E-B63	–	7269
20BC8P7	0	4	2.2	4	50 (11)	7.9	5.5	8.7	9.9	13.2	15	17.5	15	30	30	15	M-C2E-C10	M-D8E-C10	M-F8E-C10	7269
20BC011	0	5.5	4	4	50 (11)	10.8	7.5	11.5	13	17.4	15	25	15	45	45	15	M-C2E-C16	M-D8E-C16	M-F8E-C16	7269
20BC015	1	7.5	5.5	4	50 (11)	14.4	10	15.4	17.2	23.1	20	30	20	60	60	20	M-C2E-C20	M-D8E-C20	M-F8E-C20	7269
20BC022	1	11	7.5	4	50 (11)	20.6	14.3	22	24.2	33	30	45	30	80	80	30	–	M-D8E-C25	M-F8E-C25	7269
20BC030	2	15	11	4	50 (11)	28.4	19.7	30	33	45	35	60	35	120	120	50	–	–	M-F8E-C32	7269
20BC037	2	18.5	15	4	50 (11)	35	24.3	37	45	60	45	80	45	125	125	50	–	–	M-F8E-C45	7269
20BC043	3	22	18.5	4	50 (11)	40.7	28.2	43	56	74	60	90	60	150	150	60	–	–	–	–
20BC056	3	30	22	4	50 (11)	53	36.7	56	64	86	70	125	70	200	200	100	–	–	–	–
20BC072	3	37	30	4	50 (10)(11)	68.9	47.8	72	84	112	90	150	90	250	250	100	–	–	–	–
20BC085 (12)	4	45	–	4	45 (11)	81.4	56.4	85	94	128	110	200	110	300	300	150	–	–	–	–
		–	37	4	45 (11)	68.9	47.8	72	108	144	90	175	90	275	300	100	–	–	–	–
20BC105 (12)	5	55	–	4	50 (9)	100.5	69.6	105	116	158	125	225	125	400	300	150	–	–	–	–
		–	45	4	50 (9)	81.4	56.4	85	128	170	110	175	110	300	300	150	–	–	–	–
20BC125 (12)	5	55	–	4	50 (9)	121.1	83.9	125	138	163	150	275	150	500	375	250	–	–	–	–
		–	45	4	50 (9)	91.9	63.7	96	144	168	125	200	125	375	375	150	–	–	–	–
20BC140 (12)	5	75	–	4	40 (9)	136	93.9	140	154	190	200	300	200	400	400	250	–	–	–	–
		–	55	4	40 (9)	101	69.6	105	157	190	150	225	150	300	300	150	–	–	–	–
20BC170 (12)	6	90	–	4	50 (9)	164	126	170	187	255	250	375	250	600	500	250	–	–	–	–
		–	75	4	50 (9)	136	103	140	210	280	200	300	200	550	400	250	–	–	–	–
20BC205 (12)	6	110	–	4	40 (9)	199	148	205	220	289	250	450	250	600	600	400	–	–	–	–
		–	90	4	40 (9)	164	126	170	255	313	250	375	250	600	500	250	–	–	–	–
20BC260 (12)	6	132	–	2	45 (9)	255	177	260	286	390	350	550	350	750	750	400	–	–	–	–
		–	110	2	50 (9)	199	138	205	308	410	250	450	250	600	600	400	–	–	–	–

See page 29 for notes.

400 Volt AC Input Protection Devices – Frames 7…10

Drive Catalog Number (12)	Frame	kW Rating		PWM Freq.	Temp. (16)	Input Ratings		Output Amps			Dual Element Time Delay Fuse		Non-Time Delay Fuse		Circuit Breaker (3)	Motor Circuit Protector (4)
		ND	HD	kHz	°C	Amps	kVA	Cont.	1 Min.	3 Sec.	Min. (1)	Max. (2)	Min. (1)	Max. (2)	Max. (8)	Max. (8)
20BC292	7	160		4	40	293	203	292	322	438	375	650	375	850	850	400
			150	4	40	264	183	263	395	526	350	550	350	550	750	400
20BC325	7	180		4	40	326	226	325	358	488	425	700	425	950	950	600
			180	4	40	326	226	325	488	650	425	700	425	950	950	600
20BC365	8	200		2	40	366	253	365	402	548	475	800	475	1000	1000	600
			180	2	40	326	226	325	488	650	425	700	425	950	950	600
20BC415	8	240		2	40	416	288	415	457	623	525	900	525	1200	1200	600
			200	2	40	366	253	365	548	730	475	800	475	1000	1000	600
20BC481	8	280		2	40	483	334	481	530	722	600	1000	600	1400	1400	700
			240	2	40	416	288	415	623	830	525	900	525	1200	1200	600
20BC535	8	300		2	40	537	372	535	589	803	700	1200	700	1600	1600	700
			280	2	40	483	334	481	722	962	600	1000	600	1400	1400	700
20BC600	8	350		2	40	602	417	600	660	900	750	1300	750	1800	1800	800
			300	2	40	537	371	535	803	1070	700	1200	700	1600	1600	700
20BC730	9	400		2	40	702	486	730	803	1095	900	1500	900	2100	2100	900
			350	2	40	602	417	600	900	1200	750	1300	750	1800	1800	800
20BC875	10	500		2	40	877	608	875	963	1313	1100	1900	1100	2600	2600	1200
			400	2	40	877	486	700	1050	1400	900	1500	900	2100	2100	900

See page 29 for notes.

480 Volt AC Input Protection Devices – Frames 0…6

Drive Catalog Number	Frame	Hp Rating		PWM Freq.	Temp.	Input Ratings		Output Amps			Dual Element Time Delay Fuse		Non-Time Delay Fuse		Circuit Breaker (3)	Motor Circuit Protector (4)	140M Motor Protector with Adjustable Current Range (5)(6)			
		ND	HD	kHz	°C	Amps	kVA	Cont.	1 Min.	3 Sec.	Min. (1)	Max. (2)	Min. (1)	Max. (2)	Max. (8)	Max. (8)	Available Catalog Numbers - 140… (7)			Min. Enclosure Vol. (in.^{3}) (14)
20BD1P1	0	0.5	0.33	4	50 (11)	0.9	0.7	1.1	1.2	1.6	3	3	3	6	15	3	M-C2E-B16	–	–	7269
20BD2P1	0	1	0.75	4	50 (11)	1.6	1.4	2.1	2.4	3.2	3	6	3	8	15	3	M-C2E-B25	–	–	7269
20BD3P4	0	2	1.5	4	50 (11)	2.6	2.2	3.4	4.5	6	4	8	4	12	15	7	M-C2E-B40	M-D8E-B40	–	7269
20BD5P0	0	3	2	4	50 (11)	3.9	3.2	5	5.5	7.5	6	10	6	20	20	7	M-C2E-B63	M-D8E-B63	–	7269
20BD8P0	0	5	3	4	50 (11)	6.9	5.7	8	8.8	12	10	15	10	30	30	15	M-C2E-C10	M-D8E-C10	M-F8E-C10	7269
20BD011	0	7.5	5	4	50 (11)	9.5	7.9	11	12.1	16.5	15	20	15	40	40	15	M-C2E-C16	M-D8E-C16	M-F8E-C16	7269
20BD014	1	10	7.5	4	50 (11)	12.5	10.4	14	16.5	22	17.5	30	17.5	50	50	20	M-C2E-C16	M-D8E-C16	M-F8E-C16	7269
20BD022	1	15	10	4	50 (11)	19.9	16.6	22	24.2	33	25	50	25	80	80	30	–	M-D8E-C25	M-F8E-C25	7269
20BD027	2	20	15	4	50 (11)	24.8	20.6	27	33	44	35	60	35	100	100	50	–	–	M-F8E-C32	7269
20BD034	2	25	20	4	50 (11)	31.2	25.9	34	40.5	54	40	70	40	125	125	50	–	–	M-F8E-C45	7269
20BD040	3	30	25	4	50 (11)	36.7	30.5	40	51	68	50	90	50	150	150	50	–	–	M-F8E-C45	13630
20BD052	3	40	30	4	50 (11)	47.7	39.7	52	60	80	60	110	60	200	200	70	–	–	–	–
20BD065	3	50	40	4	50 (11)	59.6	49.6	65	78	104	80	125	80	250	250	100	–	–	–	–
20BD077 (12)	4	60	–	4	50 (11)	72.3	60.1	77	85	116	100	170	100	300	300	100	–	–	–	–
		–	50	4	50 (11)	59.6	49.6	65	98	130	80	125	80	250	250	100	–	–	–	–
20BD096 (12)	5	75	–	4	50 (9)	90.1	74.9	96	106	144	125	200	125	350	350	125	–	–	–	–
		–	60	4	50 (9)	72.3	60.1	77	116	154	100	170	100	300	300	100	–	–	–	–
20BD125 (12)	5	100	–	4	50 (9)	117	97.6	125	138	163	150	250	150	500	375	150	–	–	–	–
		–	75	4	50 (9)	90.1	74.9	96	144	168	125	200	125	350	350	125	–	–	–	–
20BD156 (12)	6	125	–	4	50 (9)	147	122	156	172	234	200	350	200	600	450	250	–	–	–	–
		–	100	4	50 (9)	131	109	125	188	250	175	250	175	500	375	250	–	–	–	–
20BD180 (12)	6	150	–	4	50 (9)	169	141	180	198	270	225	400	225	600	500	250	–	–	–	–
		–	125	4	50 (9)	147	122	156	234	312	200	350	200	600	450	250	–	–	–	–
20BD248 (12)	6	200	–	2	45 (9)	233	194	248	273	372	300	550	300	700	700	400	–	–	–	–
		–	150	2	50 (9)	169 (17)	141	180	270	360	225	400	225	600	500	250	–	–	–	–

See page 29 for notes.

480 Volt AC Input Protection Devices – Frames 7…10

Drive Catalog Number (12)	Frame	Hp Rating		PWM Freq.	Temp. (16)	Input Ratings		Output Amps			Dual Element Time Delay Fuse		Non-Time Delay Fuse		Circuit Breaker (3)	Motor Circuit Protector (4)
		ND	HD	kHz	°C	Amps	kVA	Cont.	1 Min.	3 Sec.	Min. (1)	Max. (2)	Min. (1)	Max. (2)	Max. (8)	Max. (8)
20BD292	7	250		4	40	281	233	292	322	438	375	650	375	850	850	400
			200	4	40	253	210	263	395	526	350	550	350	550	750	400
20BD325	7	250		4	40	313	260	325	358	488	425	700	425	950	950	600
			250	4	40	313	260	325	488	650	425	700	425	950	950	600
20BD365	8	300		2	40	351	292	365	402	548	475	800	475	1000	1000	600
			250	2	40	313	260	325	488	650	425	700	425	950	950	600
20BD415	8	350		2	40	399	331	415	457	623	525	900	525	1200	1200	600
			300	2	40	351	291	365	548	730	475	800	475	1000	1000	600
20BD481	8	400		2	40	462	384	481	530	722	600	1000	600	1400	1400	700
			350	2	40	399	331	415	623	830	525	900	525	1200	1200	600
20BD535	8	450		2	40	514	427	535	589	803	700	1200	700	1600	1600	700
			400	2	40	462	384	481	722	962	600	1000	600	1400	1400	700
20BD600	8	500		2	40	577	479	600	660	900	750	1300	750	1800	1800	800
			450	2	40	514	427	535	803	1070	700	1200	700	1600	1600	700
20BD730	9	600		2	40	673	559	730	803	1095	900	1500	900	2100	2100	900
			500	2	40	577	479	600	900	1200	750	1300	750	1800	1800	800
20BD875	10	700		2	40	841	699	875	963	1313	1100	1900	1100	2600	2600	1200
			600	2	40	673	559	700	1050	1400	900	1500	900	2100	2100	900

See page 29 for notes.

600 Volt AC Input Protection Devices – Frames 0…6 (13)

Drive Catalog Number	Frame	Hp Rating		PWM Freq.	Temp. (11)	Input Ratings		Output Amps			Dual Element Time Delay Fuse		Non-Time Delay Fuse		Circuit Breaker (3)	Motor Circuit Protector (4)	140M Motor Protector with Adjustable Current Range (5)(6)			
		ND	HD	kHz	°C	Amps	kVA	Cont.	1 Min.	3 Sec.	Min. (1)	Max. (2)	Min. (1)	Max. (2)	Max. (8)	Max. (8)	Available Catalog Numbers - 140… (7)			Min. Enclosure Vol. (in.^{3}) (14)
20BE1P7	0	1	0.5	4	50	1.3	1.4	1.7	2	2.6	2	4	2	6	15	3	M-C2E-B16	–	–	7269
20BE2P7	0	2	1	4	50	2.1	2.1	2.7	3.6	4.8	3	6	3	10	15	3	M-C2E-B25	–	–	7269
20BE3P9	0	3	2	4	50	3	3.1	3.9	4.3	5.9	6	9	6	15	15	7	M-C2E-B40	M-D8E-B40	–	7269
20BE6P1	0	5	3	4	50	5.3	5.5	6.1	6.7	9.2	9	12	9	20	20	15	–	M-D8E-B63	–	7269
20BE9P0	0	7.5	5	4	50	7.8	8.1	9	9.9	13.5	10	20	10	35	30	15	–	M-D8E-C10	M-F8E-C10	7269
20BE011	1	10	7.5	4	50	9.9	10.2	11	13.5	18	15	25	15	40	40	15	–	M-D8E-C10	M-F8E-C10	7269
20BE017	1	15	10	4	50	15.4	16	17	18.7	25.5	20	40	20	60	50	20	–	M-D8E-C16	M-F8E-C16	7269
20BE022	2	20	15	4	50	20.2	21	22	25.5	34	30	50	30	80	80	30	–	–	M-F8E-C25	7269
20BE027	2	25	20	4	50	24.8	25.7	27	33	44	35	60	35	100	100	50	–	–	M-F8E-C25	7269
20BE032	3	30	25	4	50	29.4	30.5	32	40.5	54	40	70	40	125	125	50	–	–	M-F8E-C32	13630
20BE041	3	40	30	4	50	37.6	39.1	41	48	64	50	90	50	150	150	100	–	–	–	–
20BE052	3	50	40	4	50	47.7	49.6	52	61.5	82	60	110	60	200	200	100	–	–	–	–
20BE062	4	60	50	2	50	58.2	60.5	62	78	104	80	125	80	225	225	100	–	–	–	–
20BE077 (12)	5	75	–	2	50 (9)	72.3	75.1	77	85	116	90	150	90	300	300	100	–	–	–	–
		–	60	2	50 (9)	58.2	60.5	63	94	126	90	125	90	250	250	100	–	–	–	–
20BE099 (12)	5	100	–	2	40 (9)	92.9	96.6	99	109	126	125	200	125	375	375	150	–	–	–	–
		–	75	2	40 (9)	72.3	75.1	77	116	138	100	175	100	300	300	100	–	–	–	–
20BE125 (12)	6	125	–	2	50 (9)	117	122	125	138	188	150	250	150	375	375	250	–	–	–	–
		–	100	2	50 (9)	93	96.6	99	149	198	125	200	125	375	375	150	–	–	–	–
20BE144 (12)	6	150	–	2	50 (9)	135	141	144	158	216	175	300	175	400	400	250	–	–	–	–
		–	125	2	50 (9)	117	122	125	188	250	150	275	150	375	375	250	–	–	–	–

See page 29 for notes.

690 Volt AC Input Protection Devices – Frames 0…6 (13)

Drive Catalog Number (12)	Frame	kW Rating		PWM Freq.	Temp. (11)	Input Ratings		Output Amps			Dual Element Time Delay Fuse		Non-Time Delay Fuse		Circuit Breaker (3)	Motor Circuit Protector (4)
		ND	HD	kHz	°C	Amps	kVA	Cont.	1 Min.	3 Sec.	Min. (1)	Max. (2)	Min. (1)	Max. (2)	Max. (8)	Max. (8)
20BF052	5	45	–	4	50 (9)	46.9	56.1	52	57	78	60	110	60	175	175	–
		–	37.5	4	50 (9)	40.1	48	46	69	92	50	90	50	150	150	–
20BF060	5	55	–	4	50 (9)	57.7	68.9	60	66	90	80	125	80	225	225	–
		–	45	4	50 (9)	46.9	56.1	52	78	104	60	110	60	175	175	–
20BF082	5	75	–	2	50 (9)	79	94.4	82	90	123	100	200	100	375	375	–
		–	55	2	50 (9)	57.7	68.9	60	90	120	80	125	80	225	225	–
20BF098	5	90	–	2	40 (9)	94.7	113	98	108	127	125	200	125	375	375	–
		–	75	2	40 (9)	79	94.4	82	123	140	100	200	100	375	375	–
20BF119	6	110	–	2	50 (9)	115	137	119	131	179	150	250	150	400	–	–
		–	90	2	50 (9)	94.7	113	98	147	196	125	200	125	375	–	–
20BF142	6	132	–	2	50 (9)	138	165	142	156	213	175	300	175	450	–	–
		–	110	2	50 (9)	115	137	119	179	238	150	250	150	400	–	–

See page 29 for notes.

Notes

(1) Minimum protection device size is the lowest rated device that supplies maximum protection without nuisance tripping.

(2) Maximum protection device size is the highest rated device that supplies drive protection. For US NEC, minimum size is 125% of motor FLA. Ratings shown are maximum.

(3) Circuit Breaker - inverse time breaker. For US NEC, minimum size is 125% of motor FLA. Ratings shown are maximum.

(4) Motor Circuit Protector - instantaneous trip circuit breaker. For US NEC minimum size is 125% of motor FLA. Ratings shown are maximum.

(5) Bulletin 140M with adjustable current range must have the current trip set to the minimum range that the device will not trip.

(6) Manual Self-Protected (Type E) Combination Motor Controller, UL listed for 208 Wye or Delta, 240 Wye or Delta, 480Y/277 or 600Y/ 347. Not UL listed for use on 480V or 600V Delta/Delta, corner ground, or high-resistance ground systems.

(7) The AIC ratings of the Bulletin 140M Motor Protector Circuit Breakers can vary. See Bulletin 140M Motor Protection Circuit Breakers Application Ratings.

(8) Maximum allowable rating by US NEC. Exact size must be chosen for each installation.

(9) UL Type 12/IP54 (flange mount) heat sink ambient temperature rating is 40° C/ambient of unprotected drive portion (inside enclosure) is 55° C. The ambient temperature for the UL Type 12/IP54 stand-alone drives is 40° C.

(10) Must remove top label and vent plate, drive enclosure rating is IP00, NEMA / UL Type Open.

(11) Frames 0…4 temperature rating is for NEMA / UL Type Open. The adhesive top label must be removed to operate drive at this temperature. Frames 5 & 6 do not have a top label.

(12) Drives have dual current ratings; one for normal duty applications, and one for heavy duty applications. The drive can be operated at either rating.

(13) Note: 600V class drives below 77 Amps (Frames 0…4) are declared to meet the Low Voltage Directive. It is the responsibility of the user to determine compliance to the EMC directive.

(14) When using a Manual Self-Protected (Type E) Combination Motor Controller, the drive must be installed in a ventilated or non-ventilated enclosure with the minimum volume specified in this column. Application specific thermal considerations can require a larger enclosure.

(15) Frame 7…10 drives are CE Certified for use with 400V AC and 480V AC center grounded neutral power supply systems only. It is the responsibility of the user to determine compliance to the EMC directive.

(16) Temperature rating is for IP20, NEMA / UL Type 1. For IP00, NEMA Type Open the temperature rating is 65 °C for the control board and 40 °C for the heat sink entry air.

(17) Input current on the drive can be lower than the output current due to the power factor correction in the drive.

325 Volt DC Input Protection Devices – Frames 0…6

Drive Catalog Number	Frame	Hp Rating		PWM Freq.	Temp.(1)	DC Input Ratings	Output Amps			Fuse	Non-Time Delay Fuse(2)(11)
		ND	HD	kHz	°C	Amps	Cont.	1 Min.	3 Sec.		
20BB2P2	0	0.5	0.33	4	50	2	2.2	2.4	3.3	5	JKS-5
20BB4P2	0	1	0.75	4	50	3.8	4.2	4.8	6.4	10	JKS-10
20BB6P8	1	2	1.5	4	50	6.9	6.8	9	12	15	HSJ15
20BB9P6	1	3	2	4	50	9.7	9.6	10.6	14.4	20	HSJ20
20BB015	1	5	3	4	50	16	15.3	16.8	23	30	HSJ30
20BB022	1	7.5	5	4	50	23.3	22	24.2	33	45	HSJ45
20BB028	2	10	7.5	4	50	30	28	33	44	60	HSJ60
20BB042	3	15	10	4	50	45	42	46.2	63	90	HSJ90
20BB052	3	20	15	4	50	55	52	63	80	100	HSJ100
20BB070	4	25	20	4	50	75.3	70	78	105	150	HSJ150
20BB080	4	30	25	4	50	86.8	80	105	140	175	HSJ175
20BN104(3)	5	40	–	4	50	114.1	104	115	175	200	HSJ200
		–	30	4	50	85.8	80	120	160	200	HSJ200
20BN130(3)	5	50	–	4	50	142.6	130	143	175	200	HSJ200
		–	40	4	50	114.1	104	156	175	200	HSJ200
20BN154(3)	6	60	–	4	50	169	154	169	231	300	HSJ300
		–	50	4	50	142.6	130	195	260	300	HSJ300
20BN192(3)	6	75	–	4	50	210.6	192	211	288	350	HSJ350
		–	60	4	50	169	154	231	308	350	HSJ350
20BN260(3)	6	100	–	2	45	285.3	260	286	390	400	HSJ400
		–	75	2	50	210.6	205	305	410	400	HSJ400

See page 32 for notes.

540 Volt DC Input Protection Devices – Frames 0…6

Drive Catalog Number	Frame	kW Rating		PWM Freq.	Temp.[1]	DC Input Ratings	Output Amps			Fuse	Non-Time Delay Fuse[2][11]
		ND	HD	kHz	°C	Amps	Cont.	1 Min.	3 Sec.		
20BC1P3	0	0.37	0.25	4	50	1.3	1.3	1.4	1.9	3	JKS-3
20BC2P1	0	0.75	0.55	4	50	2.1	2.1	2.4	3.2	6	JKS-6
20BC3P5	0	1.5	0.75	4	50	3.7	3.5	4.5	6	8	JKS-8
20BC5P0	0	2.2	1.5	4	50	5.3	5	5.5	7.5	10	JKS-10
20BC8P7	0	4	3	4	50	9.3	8.7	9.9	13.2	15	HSJ15
20BC011	0	5.5	4	4	50	12.6	11.5	13	17.4	20	HSJ20
20BC015	1	7.5	5.5	4	50	16.8	15.4	17.2	23.1	25	HSJ25
20BC022	1	11	7.5	4	50	24	22	24.2	33	40	HSJ40
20BC030	2	15	11	4	50	33.2	30	33	45	50	HSJ50
20BC037	2	18.5	15	4	50	40.9	37	45	60	70	HSJ70
20BC043	3	22	18.5	4	50	47.5	43	56	74	90	HSJ90
20BC056	3	30	22	4	50	61.9	56	64	86	100	HSJ100
20BC072	3	37	30	4	50[7]	80.5	72	84	112	125	HSJ125
20BC085[3][5]	4	45	–	4	45	95.1	85	94	128	150	HSJ150
		–	37	4	45	80.5	72	108	144	175	HSJ175
20BH105[3][5]	5	55	–	4	50[4]	120.2	105	116	158	175	HSJ175
		–	45	4	50[4]	95.1	85	128	170	200	HSJ200
20BH140[3][5]	5	75	–	4	40[4]	159	140	154	190	225	HSJ225
		–	55	4	40[4]	120.2	105	158	190	225	HSJ225
20BH170[3][5]	6	90	–	4	50[4]	192.3	170	187	255	300	HSJ300
		–	75	4	50[4]	159	140	210	280	300	HSJ300
20BH205[3][5]	6	110	–	4	40[4]	226	205	220	289	350	HSJ350
		–	90	4	40[4]	192.3	170	255	313	350	HSJ350
20BH260[3][5]	6	132	–	2	45[4]	298	260	286	390	500	HSJ500
		–	110	2	50[4]	226	205	305	410	500	HSJ500

See page 32 for notes.

540 Volt DC Input with Precharge – Frames 7…10

Drive Catalog Number	Frame	kW Rating		PWM Freq.	Temp.	DC Input Ratings		Output Amps			Fuse	Non-Time Delay Fuse[2][11]
		ND	HD	kHz	°C	Amps	kW	Cont.	1 Min.	3 Sec.		
20BP292	7	160		4	40	342	185	292	322	438	500	170M6608[10]
			150	4	40	309	166	263	395	526	630	170M6610[10]
20BP325	7	180		4	40	381	206	325	358	488	630	170M6610[10]
			180	4	40	381	206	325	488	650	800	170M6612[10]
20BP365	8	200		2	40	428	231	365	402	548	630	170M6610[10]
			180	2	40	381	206	325	488	650	800	170M6612[10]
20BP415	8	240		2	40	487	262	415	457	623	800	170M6612[10]
			200	2	40	428	231	365	548	730	900	170M6613[10]
20BP481	8	280		2	40	564	304	481	530	722	900	170M6613[10]
			240	2	40	487	262	415	623	830	1000	170M6614[10]
20BP535	8	300		2	40	627	338	535	589	803	1000	170M6614[10]
			280	2	40	564	304	481	722	962	1100	170M6615[10]
20BP600	8	350		2	40	703	379	600	660	900	1100[8]	170M6615[10]
			300	2	40	627	338	535	803	1070	1200[8]	170M6616[10]
20BP730	9	400		2	40	855	461	730	803	1095	1200[9]	170M6616[10]
			350	2	40	703	379	600	900	1200	1400[9]	170M6617[10]
20BH875 No Precharge	10	500		2	40	1025	553	875	963	1313	2 x 800	170M6612[10]
			400	2	40	820	443	700	1050	1400	2 x 800	170M6612[10]

See page 32 for notes.

650 Volt DC Input Protection Devices – Frames 0…6

Drive Catalog Number	Frame	Hp Rating		PWM Freq.	Temp.[1]	DC Input Ratings	Output Amps			Fuse	Non-Time Delay Fuse[2][11]
		ND	HD	kHz	°C	Amps	Cont.	1 Min.	3 Sec.		
20BD1P1	0	0.5	0.33	4	50	1.0	1.1	1.2	1.6	3	JKS-3
20BD2P1	0	1	0.75	4	50	1.9	2.1	2.4	3.2	6	JKS-6
20BD3P4	0	2	1.5	4	50	3.0	3.4	4.5	6.0	6	JKS-6
20BD5P0	0	3	2	4	50	4.5	5.0	5.5	7.5	10	JKS-10
20BD8P0	0	5	3	4	50	8.1	8.0	8.8	12	15	HSJ15
20BD011	0	7.5	5	4	50	11.1	11	12.1	16.5	20	HSJ20
20BD014	1	10	7.5	4	50	14.7	14	16.5	22	30	HSJ30
20BD022	1	15	10	4	50	23.3	22	24.2	33	40	HSJ40
20BD027	2	20	15	4	50	28.9	27	33	44	50	HSJ50
20BD034	2	25	20	4	50	36.4	34	40.5	54	60	HSJ60
20BD040	3	30	25	4	50	42.9	40	51	68	80	HSJ80
20BD052	3	40	30	4	50	55.7	52	60	80	90	HSJ90
20BD065	3	50	40	4	50	69.7	65	78	104	100	HSJ100
20BD077[3]	4	60	–	4	50	84.5	77	85	116	150	HSJ150
		–	50	4	50	69.7	65	98	130	150	HSJ150
20BR096[3][6]	5	75	–	4	50[4]	105.3	96	106	144	175	HSJ175
		–	60	4	50[4]	84.5	77	116	154	175	HSJ175
20BR125[3][6]	5	100	–	4	50[4]	137.1	125	138	163	200	HSJ200
		–	75	4	50[4]	105.3	96	144	168	200	HSJ200
20BR156[3][6]	6	125	–	4	50[4]	171.2	156	172	234	300	HSJ300
		–	100	4	50[4]	137.1	125	188	250	300	HSJ300
20BR180[3][6]	6	150	–	4	50[4]	204	180	198	270	400	HSJ400
		–	125	4	50[4]	171.2	156	234	312	400	HSJ400
20BR248[3][6]	6	200	–	2	45[4]	272	248	273	372	400	HSJ400
		–	150	2	50[4]	204	180	270	360	400	HSJ400

See page 32 for notes.

650 Volt DC Input with Precharge – Frames 7…10

Drive Catalog Number	Frame	Hp Rating		PWM Freq.	Temp.	DC Input Ratings		Output Amps			Fuse	Non-Time Delay Fuse[2][11]
		ND	HD	kHz	°C	Amps	kW	Cont.	1 Min.	3 Sec.		
20BR292	7	250		4	40	328	212	292	322	438	500	170M6608[10]
			200	4	40	296	191	263	395	526	630	170M6610[10]
20BR325	7	250		4	40	365	236	325	358	488	550	170M6609[10]
			250	4	40	365	236	325	488	650	800	170M6612[10]
20BR365	8	300		2	40	410	265	365	402	548	630	170M6610[10]
			250	2	40	365	236	325	488	650	800	170M6612[10]
20BR415	8	350		2	40	466	302	415	457	623	700	170M6611[10]
			300	2	40	410	265	365	548	730	800	170M6612[10]
20BR481	8	400		2	40	540	350	481	530	722	800	170M6619[10]
			350	2	40	466	302	415	623	830	900	170M6613[10]
20BR535	8	450		2	40	601	389	535	589	803	900	170M6613[10]
			400	2	40	540	350	481	722	962	1000	170M6614[10]
20BR600	8	500		2	40	674	436	600	660	900	1000[8]	170M6614[10]
			450	2	40	601	389	535	803	1070	1200[8]	170M6616[10]
20BR730	9	600		2	40	820	533	730	803	1095	1200[9]	170M6616[10]
			500	2	40	674	436	600	900	1200	1400[9]	170M6617[10]
20BJ875 No Precharge	10	700		2	40	983	636	875	963	1313	1400	2 x 170M6611[10]
			600	2	40	786	509	700	1050	1400	1600	2 x 170M6612[10]

See page 32 for notes.

810 Volt DC Input Protection Devices – Frames 0…6

Drive Catalog Number	Frame	Hp Rating		PWM Freq.	Temp.[1]	DC Input Ratings	Output Amps			Fuse	Non-Time Delay Fuse[2][11]
		ND	HD	kHz	°C	Amps	Cont.	1 Min.	3 Sec.		
20BE1P7	0	1	0.75	4	50	1.5	1.7	2	2.6	3	JKS-3
20BE2P7	0	2	1.5	4	50	2.4	2.7	3.6	4.8	6	JKS-6
20BE3P9	0	3	2	4	50	3.5	3.9	4.3	5.9	6	JKS-6
20BE6P1	0	5	3	4	50	6.2	6.1	6.7	9.2	10	JKS-10
20BE9P0	0	7.5	5	4	50	9.1	9	9.9	13.5	15	HSJ15
20BE011	0	10	7.5	4	50	11.5	11	13.5	18	20	HSJ20
20BE017	1	15	10	4	50	18	17	18.7	25.5	30	HSJ30
20BE022	2	20	15	4	50	23.6	22	25.5	34	40	HSJ40
20BE027	2	25	20	4	50	29	27	33	44	50	HSJ50
20BE032	3	30	25	4	50	34.3	32	40.5	54	60	HSJ60
20BE041	3	40	30	4	50	43.9	41	48	64	70	HSJ70
20BE052	3	50	40	4	50	55.7	52	61.5	82	90	HSJ90
20BE062	4	60	50	2	50	68	62	78	104	125	HSJ125
20BT099[3]	5	100	–	2	40	108.6	99	109	126	150	HSJ150
		–	75	2	40	84.5	77	116	138	150	HSJ150
20BT144[3]	6	150	–	2	50	158	144	158	216	250	HSJ250
		–	125	2	50	137.1	125	188	250	250	HSJ250

932 Volt DC Input Protection Devices – Frames 0…6

Drive Catalog Number	Frame	kW Rating		PWM Freq.	Temp.[1]	DC Input Ratings	Output Amps			Fuse	Non-Time Delay Fuse[2][11]
		ND	HD	kHz	°C	Amps	Cont.	1 Min.	3 Sec.		
20BW052[3]	5	45	–	2	50[4]	58.2	52	57	78	100	170M3691
		–	37.5	2	50[4]	46.9	46	69	92	100	170M3691
20BW098[3]	5	90	–	2	50[4]	110.7	98	108	127	160	170M3693
		–	75	2	50[4]	92.3	82	123	140	160	170M3693
20BW142[3]	6	132	–	2	50[4]	162.2	142	156	213	250	170M3695
		–	110	2	40[4]	134.9	119	179	238	315	170M3696

Notes

(1) Frames 0…4 temperature rating is for NEMA / UL Type Open. The adhesive top label must be removed to operate drive at this temperature. Frames 5 & 6 do not have a top label.

(2) The power source to common bus inverters must be derived from AC voltages 600V or less, as defined in NFPA70; Art 430-18 (NEC). Battery supplies or MG sets are not included. The following devices were validated to break current of the derived power DC Bus.
Disconnects: Allen-Bradley Bulletin 1494, 30-400A; 194, 30-400A; or ABB OESA, 600 & 800A; OESL, all sizes.
Fuses: Bussmann Type JKS, all sizes; Type 170M, Case Sizes 1, 2 and 3, or Ferraz Shawmut Type HSJ, all sizes. For any other devices, please contact the factory.

(3) Drives have dual current ratings; one for normal duty applications, and one for heavy duty applications. The drive can be operated at either rating.

(4) UL Type 12/IP54 (flange mount) heatsink ambient temperature rating is 40 °C/ambient of unprotected drive portion (inside enclosure) is 55 °C. The ambient temperature for the UL Type 12/IP54 stand-alone drives is 40 °C.

(5) Also applies to "P" voltage class.

(6) Also applies to "J" voltage class.

(7) Must remove top label and vent plate, drive enclosure rating is IP00, NEMA / UL Type Open.

(8) Two 630A Bussmann 170M6608 can also be used.

(9) Two 700A Bussmann 170M6611 can also be used.

(10) Bussmann or equivalent.

(11) See Fuse Certification and Test Data in PowerFlex AC Drives in Common Bus Configurations Application Guidelines, publication DRIVES-AT002, for fuse self-certification and test data for Bussmann 170M and JKS fuses recommended for the DC bus fusing.

Cable Recommendations

Power Cable Types Acceptable for 200…600 Volt Installations

A variety of cable types are acceptable for drive installations. For many installations, unshielded cable is adequate, provided it can be separated from sensitive circuits. As an approximate guide, allow a spacing of 0.3 meters (1 foot) for every 10 meters (32.8 feet) of length. In all cases, long parallel runs must be avoided. Do not use cable with an insulation thickness less than or equal to 15 mils (0.4mm/0.015 in.). Use Copper wire only. Wire gauge requirements and recommendations are based on 75° C. Do not reduce wire gauge when using higher temperature wire. See table below.

Location	Rating/Type	Description
Standard (Option 1)	600V, 90° C (194° F) XHHW2/RHW-2 Anixter B209500-B209507, Belden 29501-29507, or equivalent	• Four tinned copper conductors with XLP insulation. • Copper braid/aluminum foil combination shield and tinned copper drain wire. • PVC jacket.
Standard (Option 2)	Tray rated 600V, 90° C (194° F) RHH/RHW-2 Anixter OLF-7xxxxx or equivalent	• Three tinned copper conductors with XLPE insulation. • 5 mil single helical copper tape (25% overlap min.) with three bare copper grounds in contact with shield. • PVC jacket.
Class I & II; Division I & II	Tray rated 600V, 90° C (194° F) RHH/RHW-2 Anixter 7V-7xxxx-3G or equivalent	• Three bare copper conductors with XLPE insulation and impervious corrugated continuously welded aluminum armor. • Black sunlight resistant PVC jacket overall. • Three copper grounds on #10 AWG and smaller.

Unshielded

THHN, THWN or similar wire is acceptable for drive installation in dry environments provided adequate free air space and/or conduit fill rates limits are provided. **Do not use THHN or similarly coated wire in wet areas**. Any wire chosen must have a minimum insulation thickness of 15 Mils and should not have large variations in insulation concentricity.

Shielded/Armored Cable

Shielded cable contains all of the general benefits of multi-conductor cable with the added benefit of a copper braided shield that can contain much of the noise generated by a typical AC drive. Strong consideration for shielded cable should be given in installations with sensitive equipment such as weigh scales, capacitive proximity switches and other devices that may be affected by electrical noise in the distribution system. Applications with large numbers of drives in a similar location, imposed EMC regulations or a high degree of communications/ networking are also good candidates for shielded cable.

Shielded cable may also help reduce shaft voltage and induced bearing currents for some applications. In addition, the increased impedance of shielded cable may help extend the distance that the motor can be located from the drive without the addition of motor protective devices such as terminator networks.

Consideration should be given to all of the general specifications dictated by the environment of the installation, including temperature, flexibility, moisture characteristics and chemical resistance. In addition, a braided shield should be included and be specified by the cable manufacturer as having coverage of at least 75%. An additional foil shield can greatly improve noise containment.

A good example of recommended cable is Belden® 295xx (xx determines gauge). This cable has four (4) XLPE insulated conductors with a 100% coverage foil and an 85% coverage copper braided shield (with drain wire) surrounded by a PVC jacket.

Other types of shielded cable are available, but the selection of these types may limit the allowable cable length. Particularly, some of the newer cables twist 4 conductors of THHN wire and wrap them tightly with a foil shield. This construction can greatly increase the cable charging current required and reduce the overall drive performance. Unless specified in the individual distance tables as tested with the drive, these cables are not recommended and their performance against the lead length limits supplied is not known.

Maximum Motor Cable Lengths

For information on maximum motor cable lengths, refer to the Wiring and Grounding Guidelines for Pulse Width Modulated (PWM) AC Drives, publication DRIVES-IN001.

Power Wiring

The PowerFlex 700 has the following built in protective features to help simplify installation:

- Ground fault protection during start up and running ensures reliable operation
- Electronic motor overload protection increases motor life
- Removable MOV to ground and common mode capacitors to ground ensure compatibility with ungrounded systems. These devices must be disconnected if the drive is installed on a resistive grounded distribution system, an ungrounded distribution system, a B phase grounded distribution system or impedance grounded system. These devices must also be disconnected if the drive power source is a regenerative unit (such as a bus supply and brake) or is DC fed from an active converter.
- 6 kV transient protection provides increased robustness for 380...480V system voltages

There are many other factors that must be considered for optimal performance in any given application. The block diagram below highlights the primary installation considerations. Consult the Wiring and Grounding Guidelines for Pulse Width Modulated (PWM) AC Drives, publication DRIVES-IN001 for detailed recommendations on input power conditioning, dynamic braking, reflected wave protection and motor cable types.

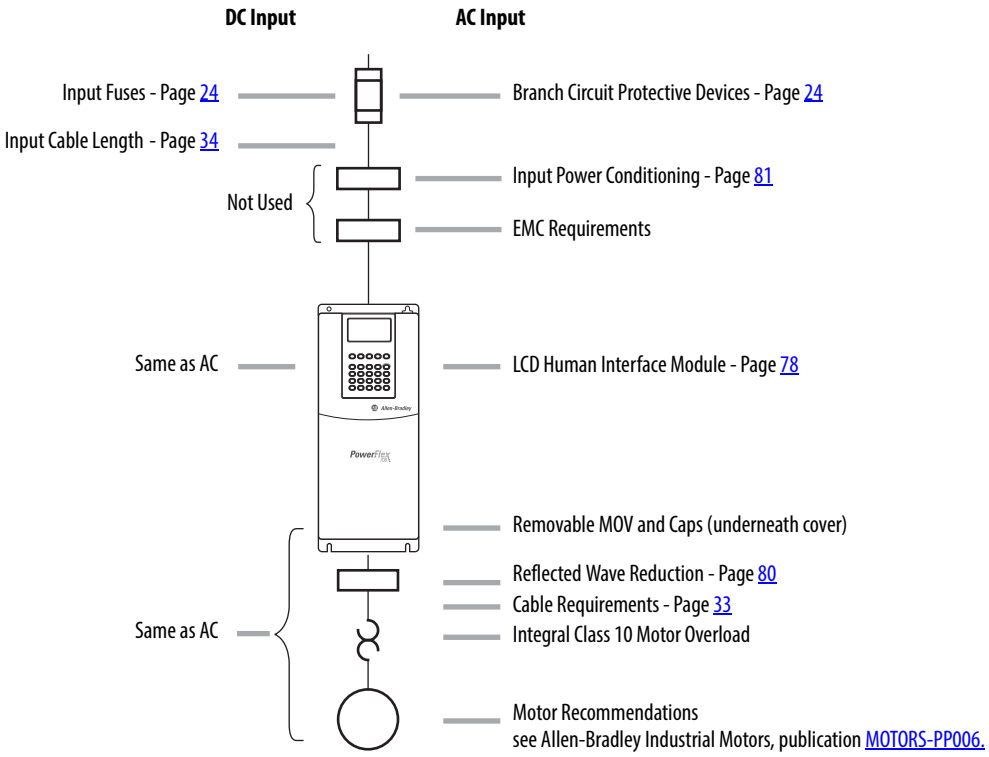

Terminal Blocks

Terminal Block Specifications

Refer to pages 36...38 for typical locations.

No.	Name	Frame	Description	Wire Size Range - See Note (3) Maximum	Wire Size Range - See Note (3) Minimum	Torque Maximum	Torque Recommended
❶	Power Terminal Block	0 & 1	Input power and motor connections	4.0 mm^2 (12 AWG)	0.5 mm^2 (22 AWG)	1.7 N•m (15 lb.•in.)	0.8 N•m (7 lb.•in.)
		2	Input power and motor connections	10.0 mm^2 (8 AWG)	0.8 mm^2 (18 AWG)	1.7 N•m (15 lb.•in.)	1.4 N•m (12 lb.•in.)
		3	Input power and motor connections	25.0 mm^2 (3 AWG)	2.5 mm^2 (14 AWG)	3.6 N•m (32 lb.•in.)	1.8 N•m (16 lb.•in.)
			BR1, 2 terminals	10.0 mm^2 (8 AWG)	0.8 mm^2 (18 AWG)	1.7 N•m (15 lb.•in.)	1.4 N•m (12 lb.•in.)
		4	Input power and motor connections	35.0 mm^2 (3 AWG)	10.0 mm^2 (14 AWG)	4.0 N•m (35 lb.•in.)	4.0 N•m (35 lb.•in.)
		5 75 Hp, 480V 100 Hp, 600V	Input power, DC+, DC–, BR1, 2, PE, motor connections	50.0 mm^2 (1 AWG)	4.0 mm^2 (8 AWG)	See Note (5)	
		5 100 Hp	Input power, DC+, DC– and motor	70.0 mm^2 (2/0 AWG)	10.0 mm^2 (8 AWG)		
			BR1, 2, PE terminals	50.0 mm^2 (1/0 AWG)	4.0 mm^2 (12 AWG)		
		6	Input power, DC+, DC–, BR1, 2, PE, motor connections	150.0 mm^2 (300 MCM) *see Note* (4)	2.5 mm^2 (14 AWG)	6.0 N•m (52 lb.•in.)	6.0 N•m (52 lb.•in.)
		7	Input power, DC+, DC–, PE, motor connections	150.0 mm^2 (300 MCM) *see Note* (4)	2.5 mm^2 (14 AWG)	2.7 N•m (24 lb.•in.)	2.7 N•m (24 lb.•in.)
		8 & 9	Input power, DC+, DC–, PE, motor connections	300.0 mm^2 (600 MCM) *see Note* (4)	2.5 mm^2 (14 AWG)	10.0 N•m (87 lb.•in.)	10.0 N•m (87 lb.•in.)
		10	Input power, DC+, DC–, PE, motor connections	300.0 mm^2 (600 MCM) *see Note* (4)	2.5 mm^2 (14 AWG)	10.0 N•m (87 lb.•in.)	10.0 N•m (87 lb.•in.)
❷	SHLD Terminal	0…6	Terminating point for wiring shields	—	—	1.6 N•m (14 lb.•in.)	1.6 N•m (14 lb.•in.)
❸	AUX Terminal Block	0…4	Auxiliary control voltage PS+, PS– (1)(2)	1.5 mm^2 (16 AWG)	0.2 mm^2 (24 AWG)	—	—
		5…6		4.0 mm^2 (12 AWG)	0.5 mm^2 (22 AWG)	0.6 N•m (5.3 lb.•in.)	0.6 N•m (5.3 lb.•in.)
		7…10		4.0 mm^2 (12 AWG)	0.049 mm^2 (30 AWG)	0.6 N•m (5.3 lb.•in.)	0.6 N•m (5.3 lb.•in.)
❹	I/O Terminal Block	0…6	Signal & control connections	2.5 mm^2 (14 AWG)	0.30 mm^2 (22 AWG)	0.6 N•m (5.3 lb.•in.)	0.6 N•m (5.3 lb.•in.)
		7…10		4.0 mm^2 (12 AWG)	0.049 mm^2 (30 AWG)	0.6 N•m (5.3 lb.•in.)	0.6 N•m (5.3 lb.•in.)
❺	Encoder Terminal Block	0…10	Encoder power & signal connections	0.75 mm^2 (18 AWG)	0.196 mm^2 (24 AWG)	0.6 N•m (5.3 lb.•in.)	0.6 N•m (5.3 lb.•in.)
❻	Fan Terminal Block	5…6	User supplied fan voltage	4.0 mm^2 (12 AWG)	0.5 mm^2 (22 AWG)	0.6 N•m (5.3 lb.•in.)	0.6 N•m (5.3 lb.•in.)
		7		4.0 mm^2 (12 AWG)	0.5 mm^2 (22 AWG)	0.9 N•m (8.0 lb.•in.)	0.6 N•m (5.3 lb.•in.)
		8…10		4.0 mm^2 (12 AWG)	0.5 mm^2 (22 AWG)	0.6 N•m (5.3 lb.•in.)	0.6 N•m (5.3 lb.•in.)

(1) External control power: UL Installation-300V DC, ±10%, Non UL Installation-270…600V DC, ±10% (0…3 Frame-40W, 165 mA, 5 Frame-80W, 90 mA).

(2) An Auxiliary Control Power Supply such as the 20-24V-AUX can be used with 400/480 and 600/690 Volt drives with Vector Control. However, consult the factory before using an auxiliary power supply in these instances. **Important:** The Auxiliary Control Power Supply Must Not be used with any Standard Control drive or any 200/240V PowerFlex 700 drive, Standard or Vector Control.

(3) **Maximum/minimum sizes that the terminal block will accept -** these are not recommendations**.**

(4) If may be necessary to connect multiple wires in parallel to these terminals using multiple lugs.

(5) Refer to the terminal block label inside the drive.

Typical Terminal Block Location

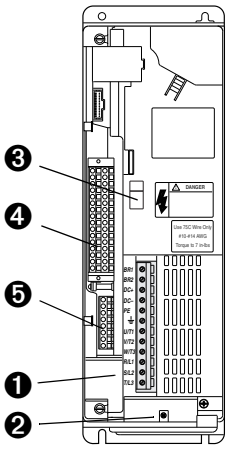

Frames 0…1

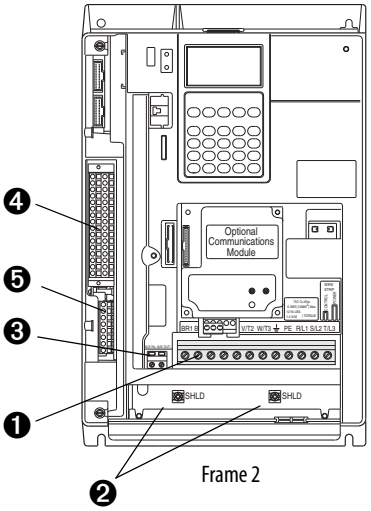

Frame 2

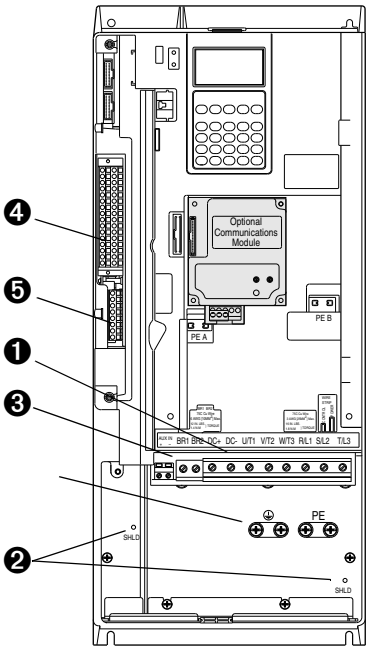

Frames 3…4

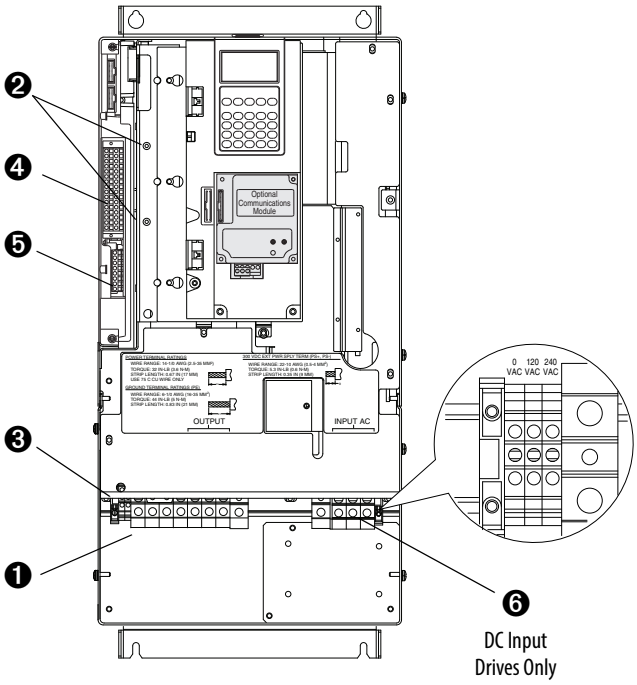

Frame 5

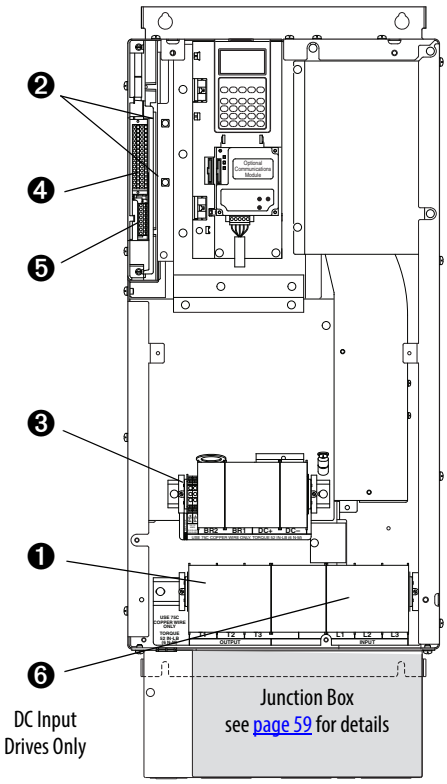

Frame 6

⏚ / PE

Typical Terminal Block Locations (continued)

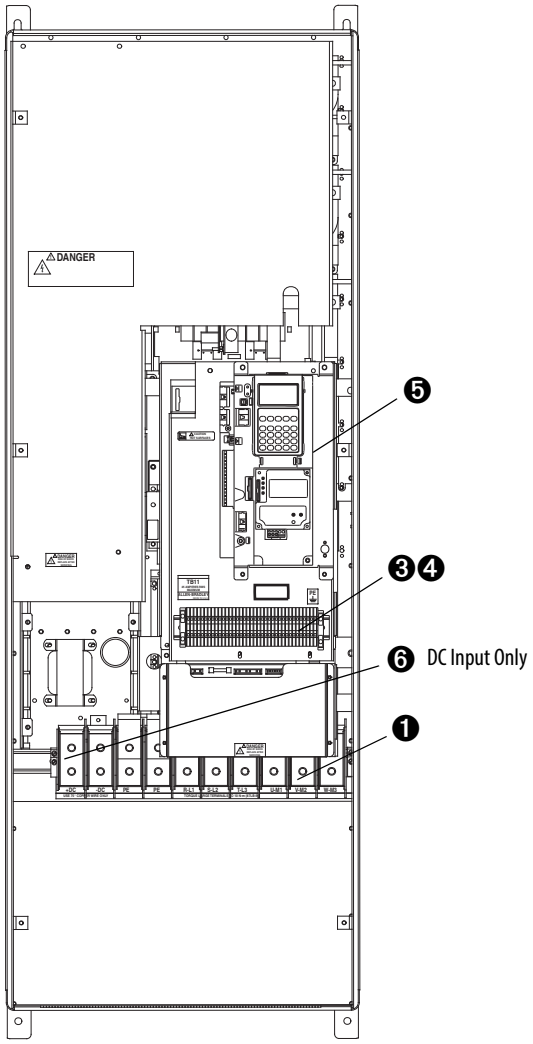

Frame 7

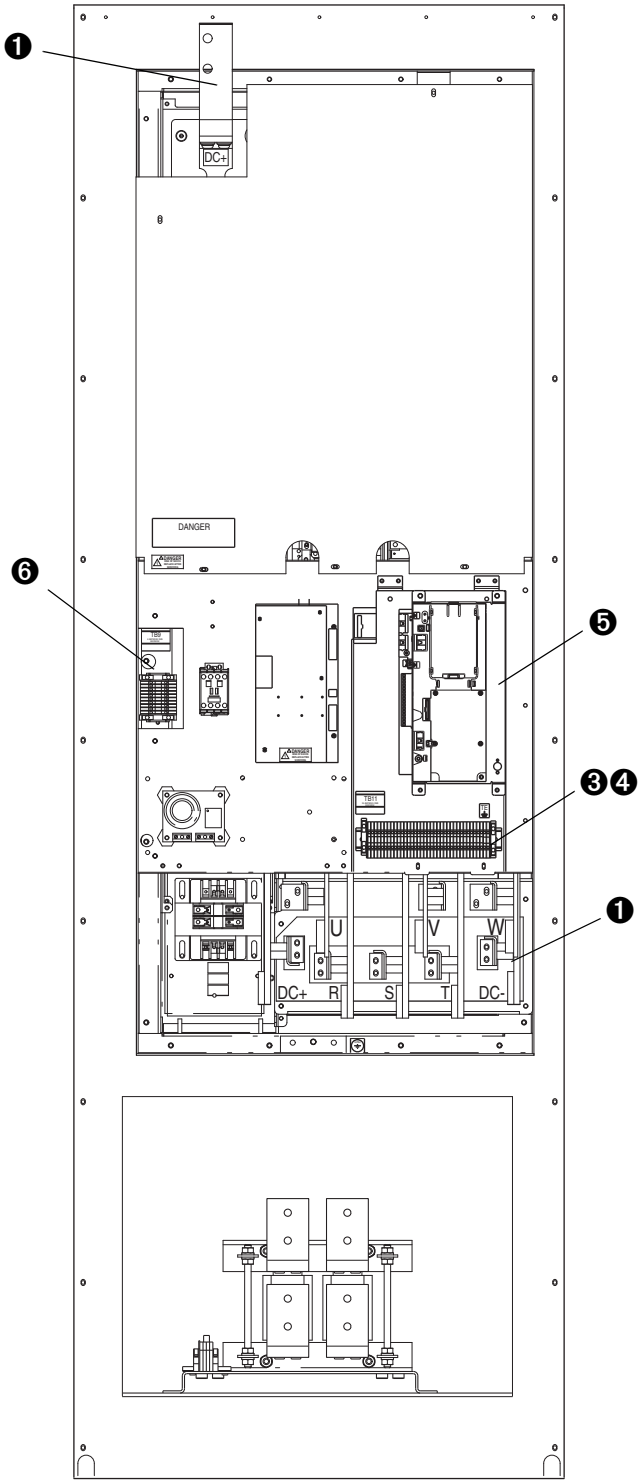

Frames 8…9

Typical Terminal Block Locations (continued)

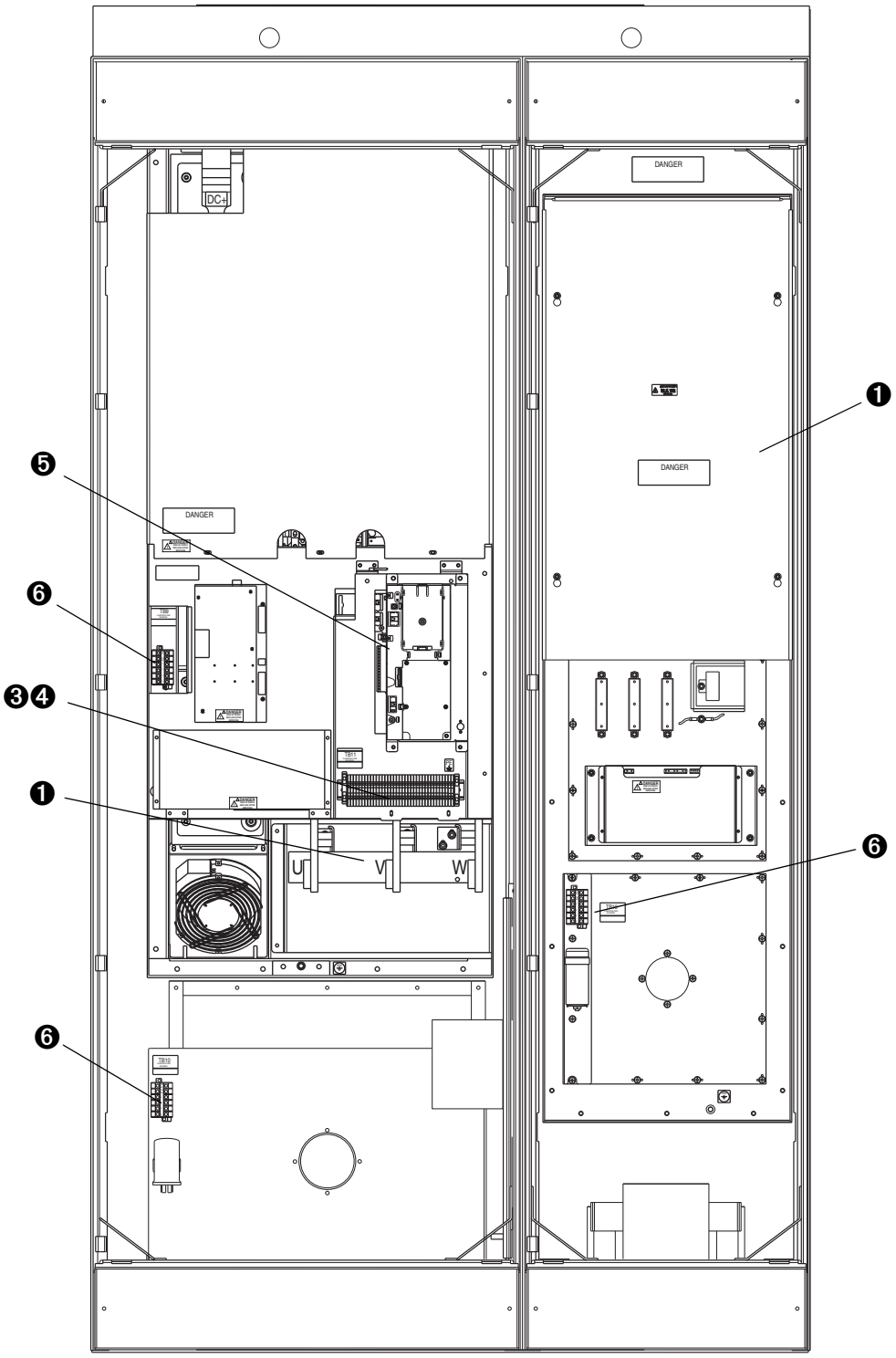

Frame 10
AC Input shown, DC Input Drives utilize the Inverter (Left) Bay only

Power Terminals

Frame	Terminal Block	
0…1	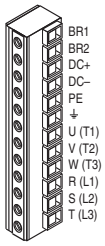	*** Note:** Shaded BR1 & BR2 Terminals will only be present on drives ordered with the Brake Option.
2	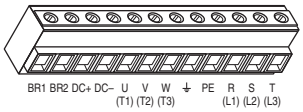	
3…4	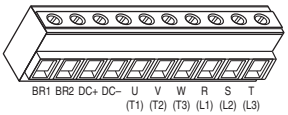	
	AC Input	**DC Input**
5	75 Hp, Normal Duty 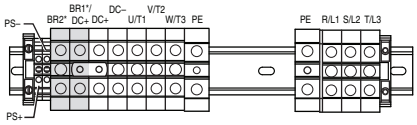	75 Hp, Normal Duty 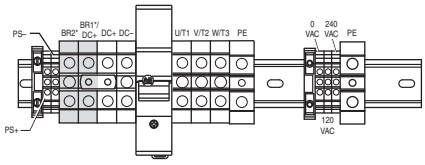
	100 Hp, Normal Duty 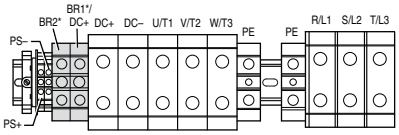	100 Hp, Normal Duty 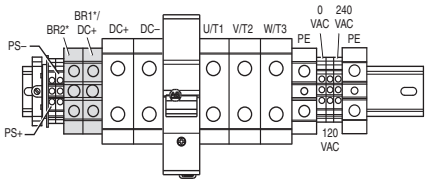
6	125…200 Hp, Normal Duty 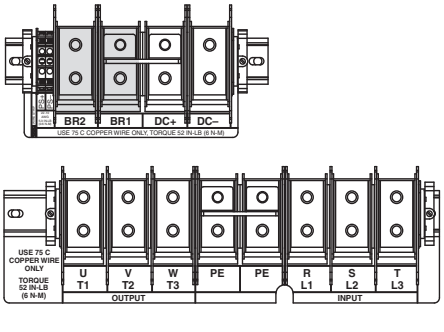	125…200 Hp, Normal Duty 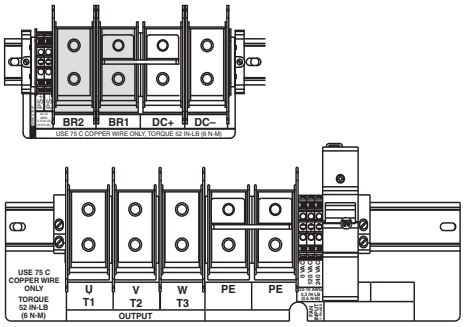

Frame	Terminal Block	
	AC Input	**DC Input**
7	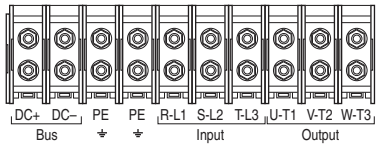	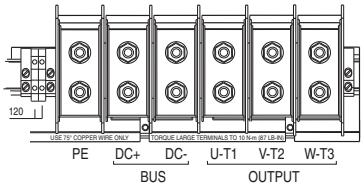
8…9	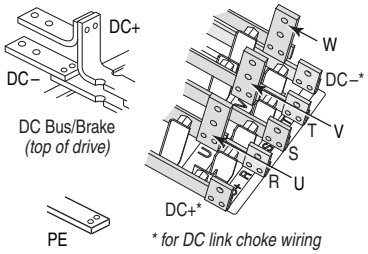	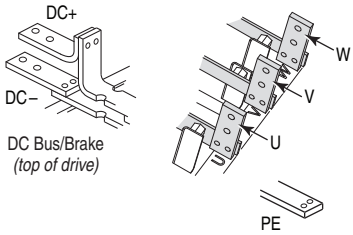
10	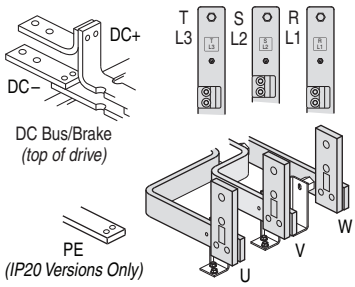	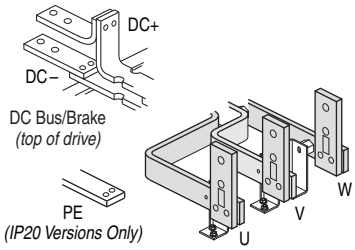

Fan Circuit Power Supply

Some drives utilize a fan transformer to power the internal fan(s). This transformer is sized specifically for the internal fan(s) and must not be used to power other circuitry. If your line voltage is different than the voltage class specified on the drive nameplate, changing the transformer taps will be required.

Frames 5…6 Fan Connections

Drive Type	Enclosure	Rating (120V AC)	No. of Fans	Connect at …
DC Input	IP00, NEMA / UL Type Open	100 VA (Frame 5) 138 VA (Frame 6)	1	Power Terminal Block Requires user supplied 120 or 240V AC. See page 36 for TB locations and terminal designations.
	IP20, NEMA / UL Type 1 IP54, NEMA / UL Type 12	100 VA (Frame 5) 138 VA (Frame 6)	1	
AC Input	IP00, NEMA / UL Type Open	100 VA (Frame 5) 138 VA (Frame 6)	1	N/A (Connected internally) A transformer matches the input line voltage to the internal fan voltage. If line voltage is different than the voltage class specified on the drive nameplate, the transformer taps may require changing. The transformer is behind the Power Terminal Block. Access is gained by releasing the terminal block from the rail and removing the transformer cover plate. 1. Locate the small metal tab at the bottom of the end terminal block. 2. Press the tab-in and pull the top of the block out. Repeat for the next block if desired. 3. Remove the transformer cover plate. 4. Select the appropriate transformer tap. 5. Replace cover and terminal block.
	IP20, NEMA / UL Type 1 IP54, NEMA / UL Type 12	100 VA (Frame 5) 138 VA (Frame 6)	1	
	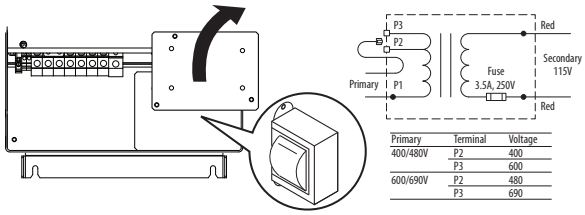		

Frame 7

Drive Type	Enclosure	Rating *(120VAC)*	No. of Fans	Connect at . . .
DC Input	IP00, NEMA / UL Type Open	250 VA	1	Power Terminal Block Requires user supplied 120V AC. See page 40 for location.
	IP20, NEMA / UL Type 1	250 VA	1	
AC Input	IP00, NEMA / UL Type Open	250 VA	1	N/A (Connected internally)
	IP20, NEMA / UL Type 1	250 VA	1	

Frame 8

Drive Type	Enclosure	Rating (120VAC)	No. of Fans	Connect at . . .
DC Input	IP00, NEMA / UL Type Open	500 VA	1	TB9 Requires user supplied 120V AC. See page 37 for TB location and page 42 for terminal designations.
	IP20, NEMA / UL Type 1	500 VA	1	
AC Input	IP00, NEMA / UL Type Open	500 VA	1	TB9 A transformer matches the input line voltage to the internal fan voltage. If line voltage is different than the voltage class specified on the drive nameplate, the transformer taps may require changing. 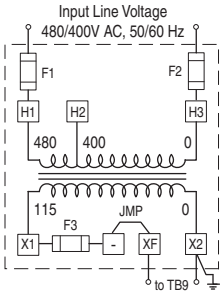
	IP20, NEMA / UL Type 1	500 VA	1	

Frame 9

Drive Type	Enclosure	Rating (120VAC)	No. of Fans	Connect at . . .
DC Input	IP00, NEMA / UL Type Open	500 VA	2	**TB9** Requires user supplied 120V AC for cap. bank fan and phase monitor. **Blower Terminal Block** Three-phase power must be supplied to the Blower TB. See page 37 for TB locations and page 42 for terminal designations.
	IP20, NEMA / UL Type 1	500 VA	2	
AC Input	IP00, NEMA / UL Type Open	500 VA	2	**TB9** A transformer matches the input line voltage to the internal voltage used for the capacitor fan and phase detector module. If the line voltage is different than the voltage class specified on the drive nameplate, the transformer taps may require changing. 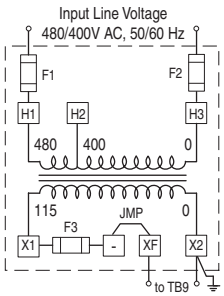
	IP20, NEMA / UL Type 1	500 VA	2	

Frame 9 Blower Operation

Frame 9 drives use a single-phase capacitor bank fan and a three-phase blower for cooling. Proper phasing must be supplied to terminals R, S, and T of the Power Terminal Block (AC drives) or the Blower Terminal Block (DC drives) to assure correct blower rotation. To verify this, a Phase Monitor is used.

Frame 10

Drive Type	Enclosure	Rating *(120VAC)*	No. of Fans	Connect at . . .
DC Input	IP00, NEMA / UL Type Open	1000 VA	2	TB9 & 10 Requires user supplied 120V AC. See page 38 for TB locations and page 42 for terminal designations.
	IP20, NEMA / UL Type 1	1000 VA	2	
AC Input	IP00, NEMA / UL Type Open	1000 VA	3	TB9, 10 & 12 Requires user supplied 120V AC. See page 38 for TB locations and page 42 for terminal designations.
	IP20, NEMA / UL Type 1	1000 VA	3	TB9, 10 & 12 A transformer matches the input line voltage to the internal fan voltage. If line voltage is different than the voltage class specified on the drive nameplate, the transformer taps may require changing. 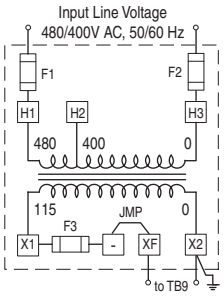

Fan/Blower Terminal Blocks - Frames 8…10

TB9, TB10

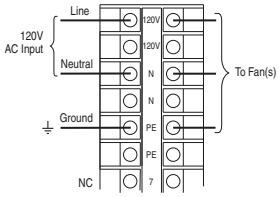

Frames 8…10

Blower TB

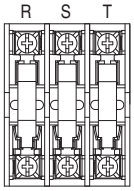

Frame 9 Only

TB12

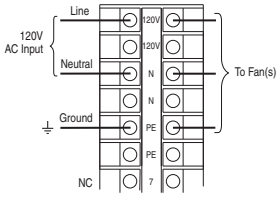

Frame 10, AC Input, IP20 Only

Fan Transformer Specifications/Fusing

Frame	Rating	Recommended Fuses	
		Primary (Quantity 2)	Secondary (Quantity 1)
8…9	500 VA	2.8A, 600V AC, KLDR/ATQR Type	6.25A, 250V AC, Time Delay
10	1000 VA	6A, 600V AC, KLDR/ATQR Type	9A, 250V AC, Time Delay

Three-Phase Blower Fusing

Frame	Recommended Fuses (Quantity 3)
9	5A, 600V AC, Time Delay

Additional Frame 10 Wiring Requirement for IP00 AC Input Drives

The Inverter and Converter sections of Frame 10 AC Input IP00, NEMA / UL Type Open drives are shipped separately. Once installed, the following connections are required.

1. DC Link Choke Wiring
   DC link chokes are supplied loose for customer mounting and wiring in IP00 drives. Refer to DC Link Chokes – Frames 8...10 below.
2. Thermistor Wiring
   Thermistor wiring is coiled loose in the Converter section for shipping. Locate the wire (labeled "To INV") and route through the enclosure wall. Connect it to the mating connector above the HIM cradle.
3. Ground the drive chassis.

DC Link Chokes – Frames 8…10

DC Link Chokes are supplied with Frame 8...10 AC input drives.

Frame	Type	DC Link Choke is supplied …
8…9	IP00, NEMA / UL Type Open	Mounted and wired
	IP20, NEMA / UL Type 1	Mounted and wired
	IP00, NEMA / UL Type Open Roll-In	Loose without cables
10	IP00, NEMA / UL Type Open	Loose without cables
	IP20, NEMA / UL Type 1	Mounted and wired

I/O Wiring

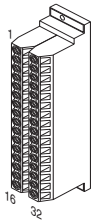

Standard Control Option – Frames 0…6 (1)

No.	Signal	Factory Default	Description
1	Anlg Volts In 1 (–)	(3)	Isolated (4), bipolar, differential, ±10V, 11 bit & sign, 88k ohm input impedance.
2	Anlg Volts In 1 (+)		
3	Anlg Volts In 2 (–)	(3)	Isolated (5), bipolar, differential, ±10V, 11 bit & sign, 88k ohm input impedance.
4	Anlg Volts In 2 (+)		
5	Pot Common	–	For (+) and (–) 10V pot references.
6	Anlg Volts Out 1 (–)	(3)	Bipolar, ±10V, 11 bit & sign, 2k ohm minimum load.
7	Anlg Volts Out 1 (+)		
8	Anlg Current Out 1 (–)	(3)	4-20mA, 11 bit & sign, 400 ohm maximum load.
9	Anlg Current Out 1 (+)		
10	Reserved for Future Use		
11	Digital Out 1 – N.C. (2)	Fault	Max. Resistive Load: 240V AC/30V DC – 1200VA, 150W Max. Current: 5A, Min. Load: 10mA Max. Inductive Load: 240V AC/30V DC – 840VA, 105W Max. Current: 3.5A, Min. Load: 10mA
12	Digital Out 1 Common		
13	Digital Out 1 – N.O. (2)	NOT Fault	
14	Digital Out 2 – N.C. (2)	NOT Run	
15	Digital Out 2 Common		
16	Digital Out 2 – N.O. (2)	Run	
17	Anlg Current In 1 (–)	(3)	Isolated (4), 4-20 mA, 11 bit & sign, 124 ohm input impedance.
18	Anlg Current In 1 (+)		
19	Anlg Current In 2 (–)	(3)	Isolated (5), 4-20 mA, 11 bit & sign, 124 ohm input impedance.
20	Anlg Current In 2 (+)		
21	–10V DC Pot Ref.	–	2k ohm minimum.
22	+10V DC Pot Ref.	–	
23	Reserved for Future Use		
24	+24V DC (6)	–	Drive supplied logic input power. (6)
25	Digital In Common	–	
26	24V Common (6)	–	Common for internal power supply.
27	Digital In 1	Stop - CF	115V AC, 50/60 Hz - Control & I/O Cat. No. option B Opto isolated Low State: less than 30V AC High State: greater than 100V AC, 5.0 mA 24V AC/DC, 50/60 Hz - Control & I/O Cat. No. option A Opto isolated Low State: less than 5V AC/DC High State: greater than 20V AC/DC, 11.2 mA DC Digital Input Impedance: 35k ohm
28	Digital In 2	Start	
29	Digital In 3	Auto/Man.	
30	Digital In 4	Speed Sel 1	
31	Digital In 5	Speed Sel 2	
32	Digital In 6	Speed Sel 3	

Vector Control Option – Frames 0…6 (1)

Signal	Factory Default	Description
Analog In 1 (–) (7)	(3)	Isolated (9), bipolar, differential, ±10V/0-20 mA, 11 bit & sign. For 0-20 mA, a jumper must be installed at terminals 17 & 18 (or 19 & 20). 88k ohm input impedance when configured for volt. & 95.3 ohm for current
Analog In 1 (+) (7)		
Analog In 2 (–) (7)		
Analog In 2 (+) (7)		
Pot Common	–	For (+) and (–) 10V pot references.
Analog Out 1 (–)	(3)	Single-ended bipolar (current output is not bipolar), ±10V/0-20 mA, 11 bit & sign, Voltage mode - limit current to 5 mA. Current mode - max. load is 400 ohms.
Analog Out 1 (+)		
Analog Out 2 (–)		
Analog Out 2 (+)		
HW PTC Input 1	–	1.8k ohm PTC, Internal 3.32k ohm pull-up resistor
Digital Out 1 – N.C. (2)	Fault	Max. Resistive Load: 240V AC/30V DC – 1200VA, 150W Max. Current: 5A, Min. Load: 10 mA Max. Inductive Load: 240V AC/30V DC – 840VA, 105W Max. Current: 3.5A, Min. Load: 10 mA
Digital Out 1 Common		
Digital Out 1 – N.O. (2)	NOT Fault	
Digital Out 2 – N.C. (2)	NOT Run	
Digital Out 2/3 Com.		
Digital Out 3 – N.O. (2)	Run	
Current In Jumper (7) – Analog In 1		Placing a jumper across terminals 17 & 18 (or 19 & 20) configures that analog input for current.
Current In Jumper (7) – Analog In 2		
–10V DC Pot Ref.	–	2k ohm minimum load.
+10V DC Pot Ref.	–	
HW PTC Input 2	–	See above
+24V DC (6)	–	Drive supplied logic input power. (6)
Digital In Common	–	
24V Common (6)	–	Common for internal power supply.
Digital In 1 (8)	Stop - CF	115V AC, 50/60 Hz - Control & I/O Cat. No. option D Opto isolated Low State: less than 30V AC High State: greater than 100V AC, 5.7 mA 24V DC - Control & I/O Cat. No. option C Opto isolated Low State: less than 5V DC High State: greater than 20V DC, 10 mA DC Digital Input Impedance: 21k ohm
Digital In 2 (8)	Start	
Digital In 3 (8)	Auto/Man.	
Digital In 4 (8)	Speed Sel 1	
Digital In 5 (8)	Speed Sel 2	
Digital In 6/Hardware Enable (8), see pg. 46	Speed Sel 3	

(1) Refer to the catalog number position "k" to determine your control option (A or B = standard control option, C or D = vector control option).

(2) Contacts in unpowered state. Any relay programmed as Fault or Alarm energizes (picks up) when power is applied to drive and deenergize (drop out) when a fault or alarm exists. Relays selected for other functions energize only when that condition exists and deenergizes when condition is removed.

(3) These inputs/outputs are dependant on a number of parameters.

(4) Differential Isolation - External source must be maintained at less than 160V with respect to PE. Input provides high common mode immunity.

(5) Differential Isolation - External source must be less than 10V with respect to PE.

(6) 150 mA maximum load designed to power digital inputs only. Not present on 115V versions.

(7) **Important:** 0…20 mA operation requires a jumper at terminals 17 & 18 (or 19 & 20). Drive damage can occur if jumper is not installed.

(8) A 10k ohm, 2 watt burden resistor must be installed on each digital input when using a triac type device. The resistor is installed between each digital input and neutral /common.

(9) Differential Isolation - External source must be maintained at less than 160V with respect to PE. Input provides high common mode immunity.

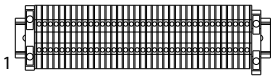

Vector Control Option – Frames 7…10			
No.	**Signal**	**Factory Default**	**Description**
1	Analog In 1 (–) (1)	(3)	Isolated (4), bipolar, differential, ±10V/4-20mA, 11 bit & sign, 88k ohm input impedance. For 4-20mA, a jumper must be installed at terminals 17 & 18 (or 19 & 20).
2	Analog In 1 (+) (1)		
3	Analog In 2 (–) (1)		
4	Analog In 2 (+) (1)		
5	Pot Common	–	For (+) and (–) 10V pot references.
6	Analog Out 1 (–)	(3)	Bipolar (current output is not bipolar), ±10V/4-20mA, 11 bit & sign, voltage mode - limit current to 5 mA. Current mode - max. load resistance is 400 ohms.
7	Analog Out 1 (+)		
8	Analog Out 2 (–)		
9	Analog Out 2 (+)		
10	HW PTC Input 1	–	1.8k ohm PTC, Internal 3.32k ohm pull-up resistor
11	Digital Out 1 – N.C. (2)	Fault	Max. Resistive Load: 240V AC/30V DC – 1200VA, 150W Max. Current: 5A, Min. Load: 10mA Max. Inductive Load: 240V AC/30V DC – 840VA, 105W Max. Current: 3.5A, Min. Load: 10mA
12	Digital Out 1 Common		
13	Digital Out 1 – N.O. (2)	NOT Fault	
14	Digital Out 2 – N.C. (2)	NOT Run	
15	Digital Out 2/3 Com.		
16	Digital Out 3 – N.O. (2)	Run	
17	Current In Jumper (1) – Analog In 1		Placing a jumper across terminals 17 & 18 (or 19 & 20) configures that analog input for current.
18			
19	Current In Jumper (1) – Analog In 2		
20			
21	–10V Pot Reference	–	2k ohm minimum load.
22	+10V Pot Reference	–	
23	HW PTC Input 2	–	See above
24	+24V DC (5)	–	Drive supplied logic input power. (5)
25	Digital In Common	–	
26	24V Common (5)	–	Common for internal power supply.
27	Digital In 1	Stop - CF	115V AC, 50/60 Hz - Control & I/O Cat. No. option D Opto isolated Low State: less than 30V AC High State: greater than 100V AC 24V DC - Control & I/O Cat. No. option C Opto isolated Low State: less than 5V DC High State: greater than 20V DC 11.2 mA DC
28	Digital In 2	Start	
29	Digital In 3	Auto/Man.	
30	Digital In 4	Speed Sel 1	
31	Digital In 5	Speed Sel 2	
32	Digital In 6/Hardware Enable, see pg. 46	Speed Sel 3	
33	Digital Out 4 – N.C.	Fault	Dedicated fault output - Not user configurable. Relay energizes (picks up) when power is applied to the drive and deenergizes (drops out) when a fault exists. See Terminals 11-16 for specs.
34	Digital Out 4 Common		
35	Digital Out 4 – N.O.	NOT Fault	
PS+	Aux. Control Power (+)		
PS-	Aux. Control Power (–)		
PE	PE Ground		PE Ground
PE	PE Ground		PE Ground

(1) **Important:** 0…20mA operation requires a jumper at terminals 17 & 18 (or 19 & 20). Drive damage can occur if jumper is not installed.

(2) Contacts in unpowered state. Any relay programmed as Fault or Alarm energizes (picks up) when power is applied to the drive and deenergizes (drops out) when a fault or alarm exists. Relays selected for other functions energize only when that condition exists and deenergize when condition is removed.

(3) These inputs/outputs are dependant on a number of parameters.

(4) Differential Isolation - External source must be maintained at less than 160V with respect to PE. Input provides high common mode immunity.

(5) 150mA maximum Load. Not present on 115V versions.

Hardware Enable Circuitry (Vector Control Only)

By default, the user can program a digital input as an Enable input. The status of this input is interpreted by drive software. If the application requires the drive to be disabled without software interpretation, a "dedicated" hardware enable configuration can be utilized. This is done by removing a jumper and wiring the enable input to "Digital In 6."

Encoder Interface Option (Vector Control Only)

Encoder Terminal Designations

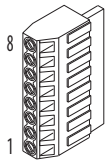

No.	Description (refer to specifications on page 11)	
8	+12V (1) DC Power	Internal power source 250 mA.
7	+12V (1) DC Return (Common)	
6	Encoder Z (NOT)	Pulse, marker or registration input. (2)
5	Encoder Z	
4	Encoder B (NOT)	Quadrature B input.
3	Encoder B	
2	Encoder A (NOT)	Single channel or quadrature A input.
1	Encoder A	

(1) Jumper selectable +5/12V is available on 20B-ENC-1 Encoder Boards.
(2) Z channel can be used as a pulse input while A & B are used for encoder.

Sample Encoder Wiring

I/O	Connection Example
Encoder Power –Internal Drive Power Internal (drive) 12V DC, 250mA (1)	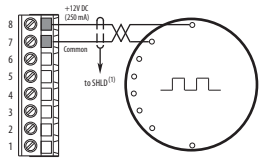
Encoder Signal –Single-Ended, Dual Channel (2)	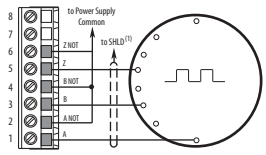

I/O	Connection Example
Encoder Power –External Power Source	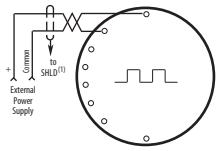
Encoder Signal –Differential, Dual Channel	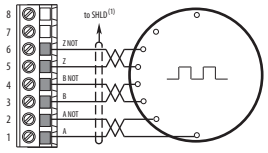

(1) SHLD connection is on drive chassis (see page 36).
(2) Example applies to 20B-ENC-1 only.

I/O Wiring Examples – Standard & Vector Control Options

Input/Output	Connection Example	Required Parameter Changes
Potentiometer Unipolar Speed Reference (1) 10k Ohm Pot. Recommended (2k Ohm Minimum)	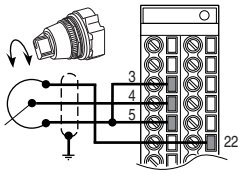	• Adjust Scaling: Parameters 91/92 and 325/326 • View Results: Parameter 002
Joystick Bipolar Speed Reference (1) ±10V Input	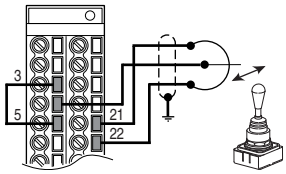	• Set Direction Mode: Parameter 190 = "1, Bipolar" • Adjust Scaling: Parameters 91/92 and 325/326 • View Results: Parameter 002
Analog Input Bipolar Speed Reference ±10V Input	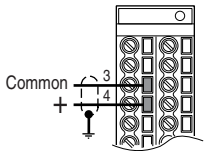	• Set Direction Mode: Parameter 190 = "1, Bipolar" • Adjust Scaling: Parameters 91/92 and 325/326 • View Results: Parameter 002
Analog Voltage Input Unipolar Speed Reference 0 to +10V Input	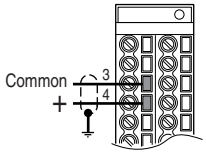	• Configure Input with parameter 320 • Adjust Scaling: Parameters 91/92 and 325/326 • View results: Parameter 002
Analog Current Input Unipolar Speed Reference Standard 4-20 mA Input	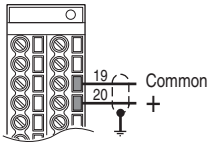	• Configure Input for Current: Parameter 320, Bit 1 = "1, Current" • Adjust Scaling: Parameters 91/92 and 325/326 • View Results: Parameter 002
Analog Current Input Unipolar Speed Reference Vector 0-20 mA Input	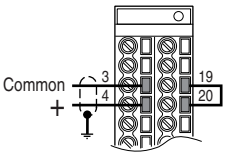	• Configure Input for Current: Parameter 320 and add jumper at appropriate terminals • Adjust Scaling: Parameters 91/92 and 325/326 • View results: Parameter 002
Analog Input, PTC Vector PTC OT set > 5V PTC OT cleared < 4V PTC Short < 0.2V	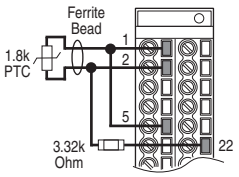	• Set Fault Config 1: Parameter 238, bit 7 = "Enabled" • Set Alarm Config 1: Parameter 259, bit 11 = "Enabled" • View Drive Alarm 1: Parameter 211, bit 11 = "True"
HW PTC Input Series B Only PTC OT set > 5V PTC OT cleared < 4V PTC Short < 0.2V	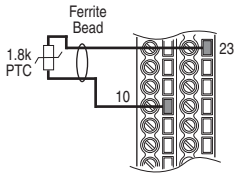	• Set Fault Config 1: Parameter 238, bit 13 = "Enabled" • Set Alarm Config 1: Parameter 259, bit 18 = "Enabled" • View Status: Drive Alarm 1: Parameter 211, bit 18 = "True"

(1) Refer to the PowerFlex 700 User Manual for important bipolar wiring information.

Input/Output	Connection Example	Required Parameter Changes
Analog Output ±10V, 0-20 mA Bipolar +10V Unipolar *(shown)* Standard Control 4-20 mA Unipolar *(use term. 8 & 9)*	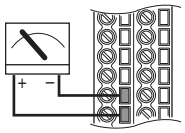	• Configure with Parameter 340 • Select Source Value: Parameter 384, [Digital Out1 Sel] • Adjust Scaling: Parameters 343/344
2-Wire Control Non-Reversing(1) 24V DC internal supply	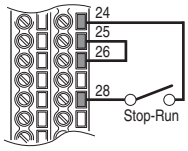	• Disable Digital Input:#1: Parameter 361 = "0, Unused" • Set Digital Input #2: Parameter 362 = "7, Run" • Set Direction Mode: Parameter 190 = "0, Unipolar"
2-Wire Control Reversing(1) External supply (I/O Board dependent)	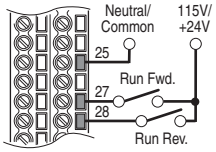	• Set Digital Input:#1: Parameter 361 = "8, Run Forward" • Set Digital Input #2: Parameter 362 = "9, Run Reverse"
3-Wire Control Internal supply	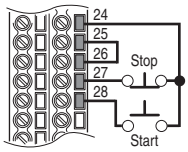	• No Changes Required
3-Wire Control External supply (I/O Board dependent). Requires 3-wire functions only ([Digital In1 Sel]). Using 2-wire selections will cause a type 2 alarm.	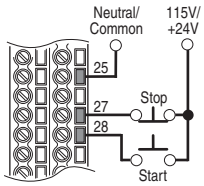	• No Changes Required •
Digital Input PLC Output Card (Board dependent).	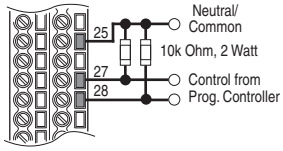	• No Changes Required •
Digital Output Relays shown in powered state with drive faulted. See page 44. Standard Control 1 relay at terminals 14-16. Vector Control 2 relays at terminals 14-16.	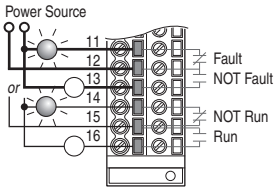	• Select Source to Activate: Parameters 380/384
Enable Input	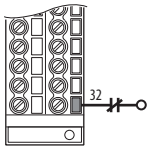	• Standard Control Configure with parameter 366 • Vector Control Configure with parameter 366 For dedicated hardware Enable: Remove Jumper J10 (see page 46)

(1) **Important:** Programming inputs for 2 wire control deactivates all HIM Start buttons.

Mounting

Frame/Rating Cross Reference

AC Input

	208/240		400V		480V		600V		690V	
Frame	**ND Hp**	**HD Hp**	**ND kW**	**HD kW**	**ND Hp**	**HD Hp**	**ND Hp**	**HD Hp**	**ND kW**	**HD kW**
0	0.5	0.33	0.37	0.25	0.5	0.33	1	0.5	–	–
	1	0.75	0.75	0.55	1	0.75	2	1	–	–
	–	–	1.5	0.75	2	1.5	3	2	–	–
	–	–	2.2	1.5	3	2	5	3	–	–
	–	–	4	2.2	5	3	7.5	5	–	–
	–	–	5.5	4	7.5	5	–	–	–	–
1	2	1.5	7.5	5.5	10	7.5	10	7.5	–	–
	3	2	11	7.5	15	10	15	10	–	–
	5	3	–	–	–	–	–	–	–	–
	7.5	5	–	–	–	–	–	–	–	–
2	10	7.5	15	11	20	15	20	15	–	–
	–	–	18.5	15	25	20	25	20	–	–
3	15	10	22	18.5	30	25	30	25	–	–
	20	15	30	22	40	30	40	30	–	–
	–	–	37	30	50	40	50	40	–	–
4	25	20	45	37	60	50	60	50	–	–
	30	25	–	–	–	–	–	–	–	–
5	40	30	55	45	75	60	75	60	45	37.5
	50	40	75	55	100	75	100	75	55	45
	–	–	–	–	–	–	–	–	75	55
	–	–	–	–	–	–	–	–	90	75
6	60	50	90	75	125	100	125	100	110	90
	75	60	110	90	150	125	150	125	132	110
	100	75	132	110	200	150	–	–	–	–
7	–	–	160	150	250	200	–	–	–	–
	–	–	180	180	250	250	–	–	–	–
8	–	–	200	180	300	250	–	–	–	–
	–	–	240	200	350	300	–	–	–	–
	–	–	280	240	400	350	–	–	–	–
	–	–	300	280	450	400	–	–	–	–
	–	–	350	300	500	450	–	–	–	–
9	–	–	400	350	600	500	–	–	–	–
10	–	–	500	400	700	600	–	–	–	–

DC Input

	325V		540V		650V		810V		932V	
Frame	**ND Hp**	**HD Hp**	**ND kW**	**HD kW**	**ND Hp**	**HD Hp**	**ND Hp**	**HD Hp**	**ND kW**	**HD kW**
0	0.5	0.33	–	–	0.5	0.33	1	0.75	–	–
	1	0.75	–	–	1	0.75	2	1.5	–	–
	–	–	–	–	2	1.5	3	2	–	–
	–	–	–	–	3	2	5	3	–	–
	–	–	–	–	5	3	7.5	5	–	–
	–	–	–	–	7.5	5	10	7.5	–	–
1	2	1.5	0.37	0.25	10	7.5	15	10	–	–
	3	2	0.75	0.55	15	10	–	–	–	–
	5	3	1.5	0.75	–	–	–	–	–	–
	7.5	5	2.2	1.5	–	–	–	–	–	–
	–	–	4	2.2	–	–	–	–	–	–
	–	–	5.5	4	–	–	–	–	–	–
	–	–	7.5	5.5	–	–	–	–	–	–
	–	–	11	7.5	–	–	–	–	–	–
2	10	7.5	15	11	20	15	20	15	–	–
	–	–	18.5	15	25	20	25	20	–	–
3	15	10	22	18.5	30	25	30	25	–	–
	20	15	30	22	40	30	40	30	–	–
	–	–	37	30	50	40	50	40	–	–
4	25	20	45	37	60	50	60	50	–	–
	30	25	–	–	–	–	–	–	–	–
5	40	30	55	45	75	60	100	75	45	37.5
	50	40	–	–	100	75	–	–	90	75
6	60	50	75	55	125	100	150	125	132	110
	75	60	90	75	150	125	–	–	–	–
	100	75	110	90	–	–	–	–	–	–
	–	–	132	110	200	150	–	–	–	–
7	–	–	160	150	250	200	–	–	–	–
	–	–	180	180	250	250	–	–	–	–
8	–	–	200	180	300	250	–	–	–	–
	–	–	240	200	350	300	–	–	–	–
	–	–	280	240	400	350	–	–	–	–
	–	–	300	280	450	400	–	–	–	–
	–	–	350	300	500	450	–	–	–	–
9	–	–	400	350	600	500	–	–	–	–
10	–	–	500	400	700	600	–	–	–	–

Operating Temperatures

PowerFlex 700 drives are designed to operate at 0°to 40° C ambient. To operate the drive in installations between 41° and 50° C, see the information below and refer to pages 25...32 for exceptions.

Acceptable Surrounding Air Temperature & Required Actions

Enclosure Rating	Temperature Range	Drive
IP20, NEMA / UL Type 1 (with Top Label) (1)	0…40 °C (0…104 °F)	Frames 0…4, All Ratings
	0…50 °C (0…122 °F)	Frames 5…6, Most Ratings (2)
IP20, NEMA / UL Type Open (Top Label Removed) (1)	0…50 °C (0…122 °F)	Frames 0…6, Most Ratings (2)
	0…45 °C (0…113 °F)	20BC072 Only
IP00, NEMA / UL Type Open (Top Label & Vent Plate Removed)	0…50 °C (0…122 °F)	20BC072 Only (3)
Flange Mount Front: IP00, NEMA / UL Type Open Back/Heat Sink: IP54, NEMA / UL Type 12	0…55 °C (0…131 °F) Front (Inside Encl.) 0…40 °C (0…104 °F) Back (External)	Frames 5…6
Stand-alone/Wall Mount IP54, NEMA / UL Type 12	0…40 °C (0…104 °F)	Frames 5…6
IP20, NEMA / UL Type 1	0…40 °C (0…104 °F)	Frames 7…10
IP00, NEMA / UL Type Open/Flange Mount Front: IP00, NEMA / UL Type Open Back/Heat Sink: IP54, NEMA12	0…65 °C (0…149 °F) Control Board 0…40 °C (0…104 °F) Heat Sink Entry Air	Frames 7…10
Roll In Front: IP00, NEMA / UL Type Open Back/Heat Sink: IP54, NEMA12	0…65 °C (0…149 °F) Control Board 0…40 °C (0…104 °F) Heat Sink Entry Air	Frames 8…9

(1) Removing the adhesive top label from the drive changes the NEMA / UL enclosure rating from Type 1 to Open. Frames 5 and 6 do not have a top label.
(2) Refer to pages 25…32 for exceptions.
(3) To remove vent plate (see page 53 for location), lift top edge of plate from the chassis. Rotate the plate out from the back plate.

Minimum Mounting Clearances

Frames 0…6

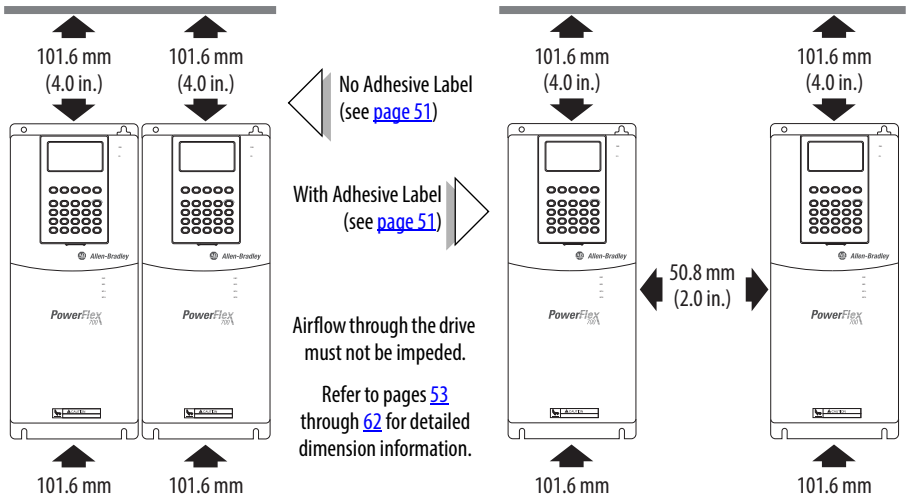

Specified vertical clearance requirements (indicated above) are intended to be from the drive to the closest object that can restrict airflow through the drive heat sink and chassis. The drive must be mounted in a vertical orientation as shown and must make full contact with the mounting surface. Do not use standoffs or spacers. In addition, inlet air temperature must not exceed the product specification.

Frames 7…10

The drive must be mounted with sufficient space at the top, sides, and front of the cabinet to allow for proper heat dissipation.

Frame	Recommendations
7	Minimum of 152 mm (6.0 in.) at the top and bottom of the enclosure and 102 mm (4.0 in.) on the sides. Flange Mount - Minimum of 152 mm (6.0 in.) at the back of the enclosure (flange mount surface to wall).
8…10	Minimum of 152 mm (6.0 in.) at the top of the enclosure. Additionally, allow a minimum of 102 mm (4.0 in.) on each side OR 152 mm (6.0 in.) in the back. Flange Mount - Minimum of 102 mm (4.0 in.) on each side.

Dimensions and Weights

Frames 0…3 – IP20, NEMA / UL Type 1

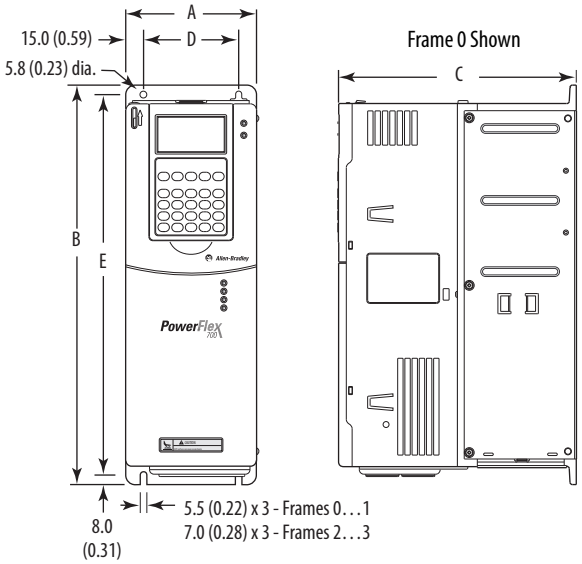

Frame	A	B	C	D	E	Weight (1) kg (lbs.)	
						Drive	Drive & Packaging
0	110.0 (4.33)	336.0 (13.23)	200.0 (7.87)	80.0 (3.15)	320.0 (12.60)	5.22 (11.5)	8.16 (18)
1	135.0 (5.31)	336.0 (13.23)	200.0 (7.87)	105.0 (4.13)	320.0 (12.60)	7.03 (15.5)	9.98 (22)
2	222.0 (8.74)	342.5 (13.48)	200.0 (7.87)	192.0 (7.56)	320.0 (12.60)	12.52 (27.6)	15.20 (33.5)
3	222.0 (8.74)	517.5 (20.37)	200.0 (7.87)	192.0 (7.56)	495.0 (19.49)	18.55 (40.9)	22.68 (50)

(1) Weights include HIM and Standard I/O.

Dimensions are in millimeters and (inches)

.

Frame 0

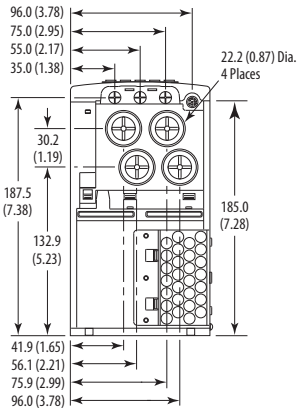

Frame 1

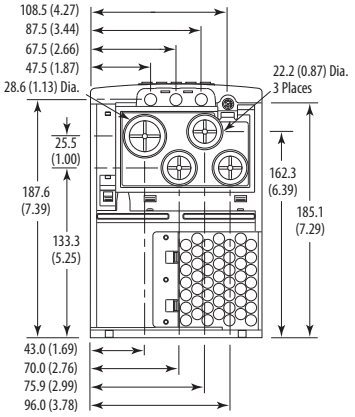

Frame 2

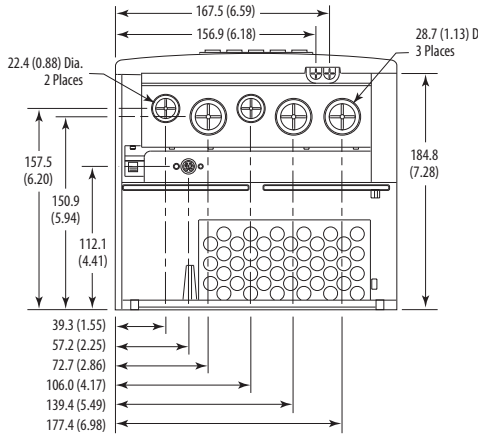

Frame 3
All *except* 50 Hp, 480V (37 kW, 400V)

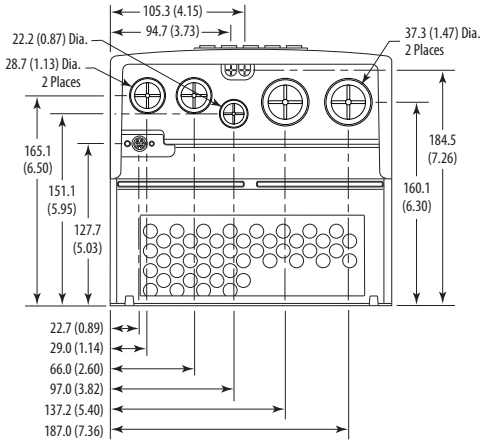

Frame 3
50 Hp, 480V (37 kW, 400V) Normal Duty Drive

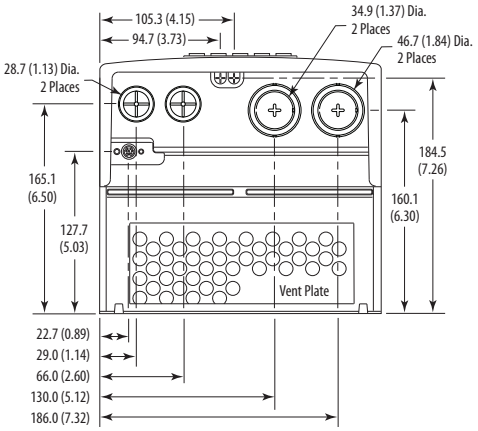

Frame 4 – IP20, NEMA / UL Type 1

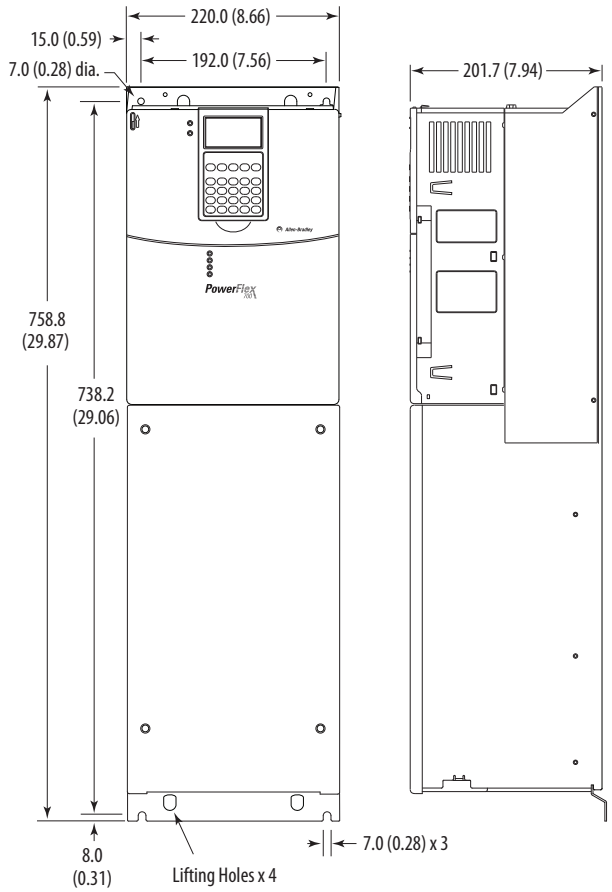

Dimensions are in millimeters and (inches)

Frame	Approx. Weight (1) kg (lbs.)	
	Drive	Drive & Packaging
4	24.49 (54.0)	29.03 (64.0)

(1) Weights include HIM and Standard I/O.

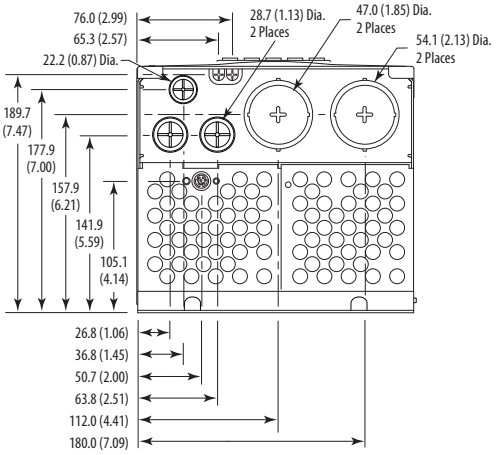

Frame 5 – IP20, NEMA / UL Type 1

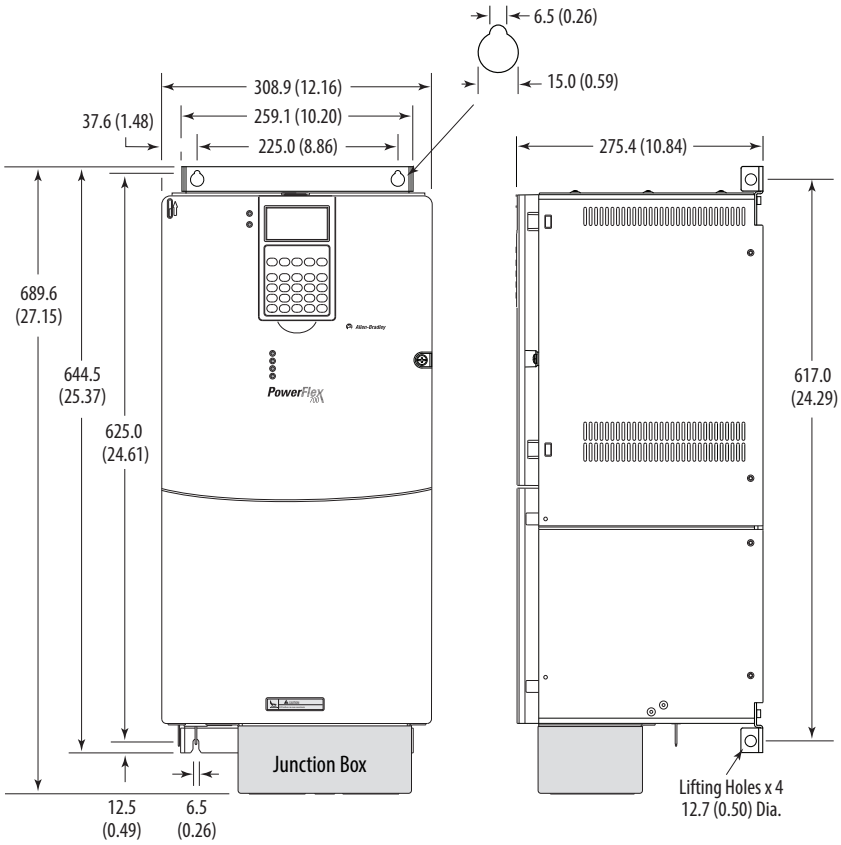

Dimensions are in millimeters and (inches)

Frame	Approx. Weight (1) kg (lbs.)	
	Drive	Drive & Packaging
5	37.19 (82.0)	49.50 (109.0)

(1) Weights include HIM and Standard I/O. Add 2.70 kg (6.0 lbs.) for the 20BC140 drive.

30 kW, 208V (40 Hp, 240V)
55 kW, 400V (75 Hp, 480V)
45/55/75 kW, 690V (75 Hp, 600V)

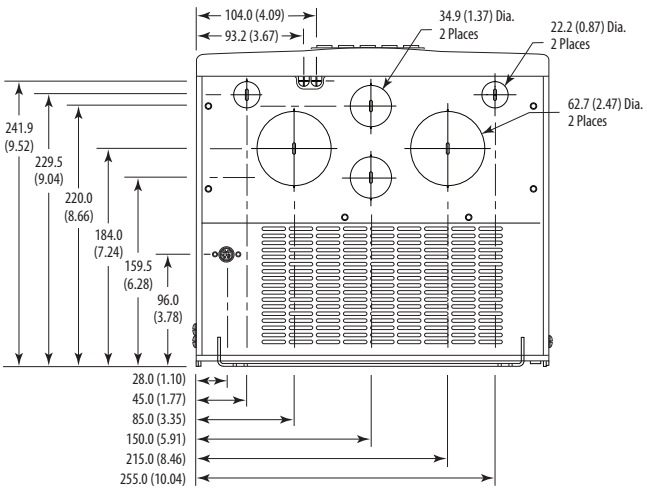

37 kW, 208V (50 Hp, 240V)
75 kW, 400V (100 Hp, 480V)
90kW, 690V (100 Hp, 600V)

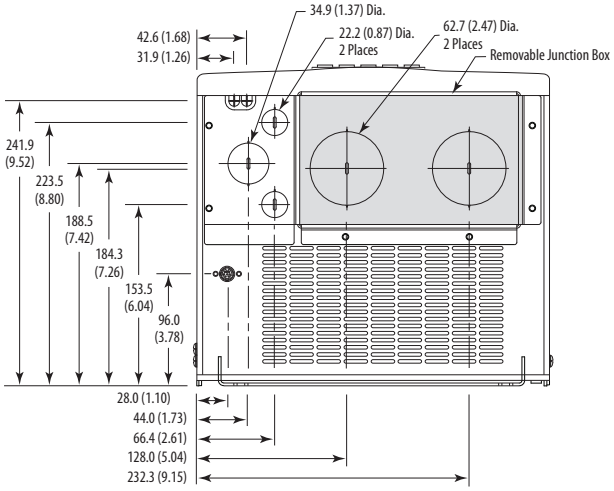

Frame 5 – IP54, NEMA Type 12 Standalone (400…690V drives only)

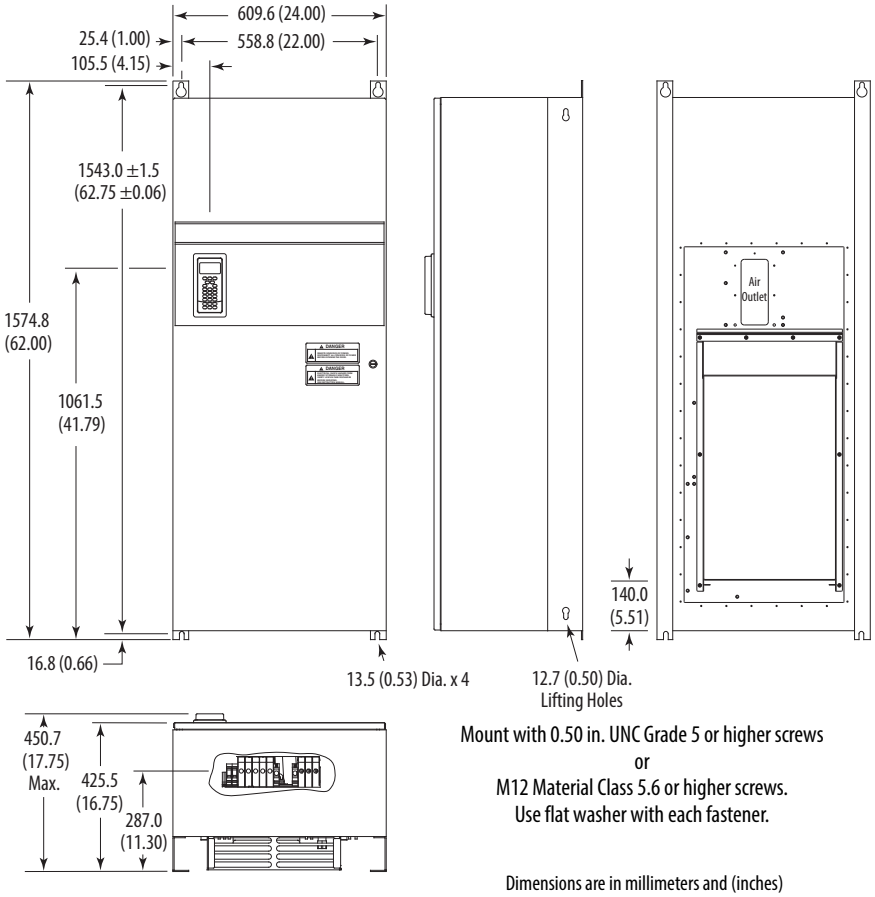

Frame	Description	Approx. Weight (1) kg (lbs.)	
		Drive	Drive & Packaging
5	Standalone	102.51 (226.0)	154.68 (341.0)

(1) Weights include HIM and Standard I/O.

Frame 5 – IP54, NEMA Type 12 Flange Mount (400…690V drives only)

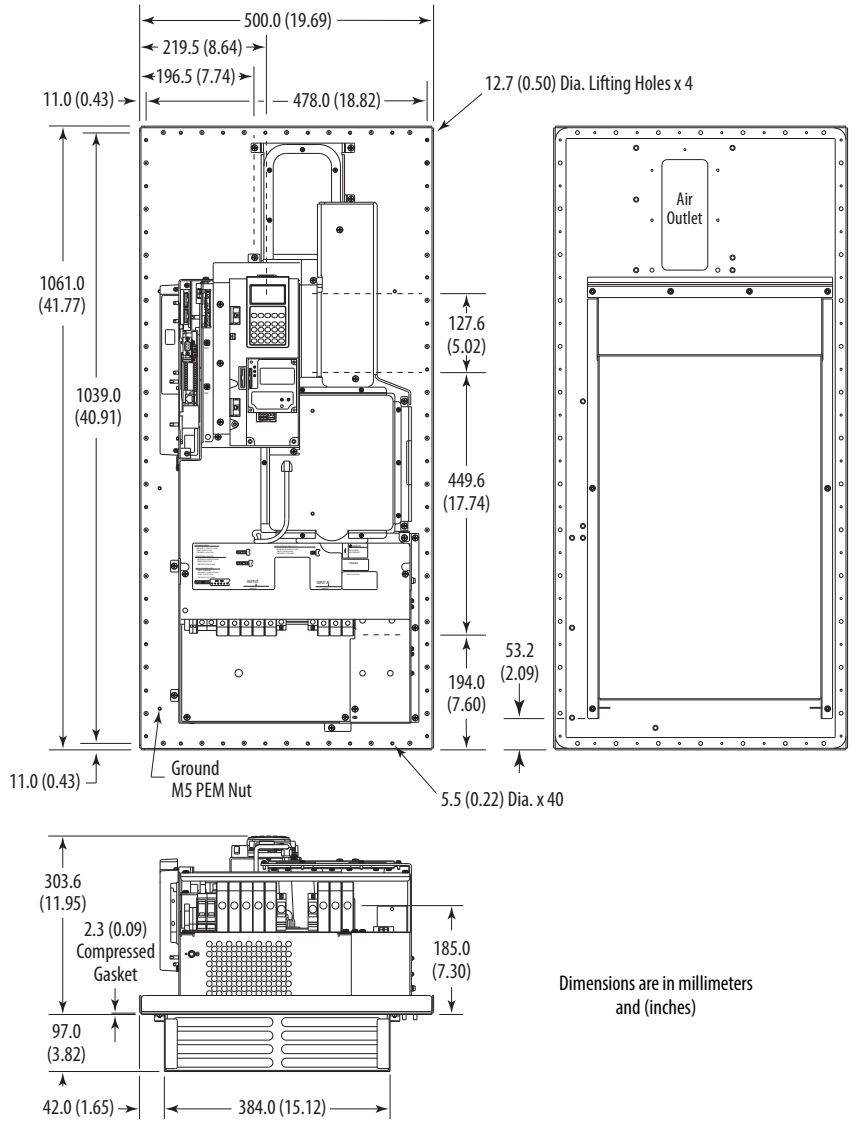

Frame	Description	Approx. Weight (1) kg (lbs.)	
		Drive	Drive & Packaging
5	Flange Mount	61.69 (136.0)	81.65 (180.0)

(1) Weights include HIM and Standard I/O.

Frame 5 – Flange Mount Cutout

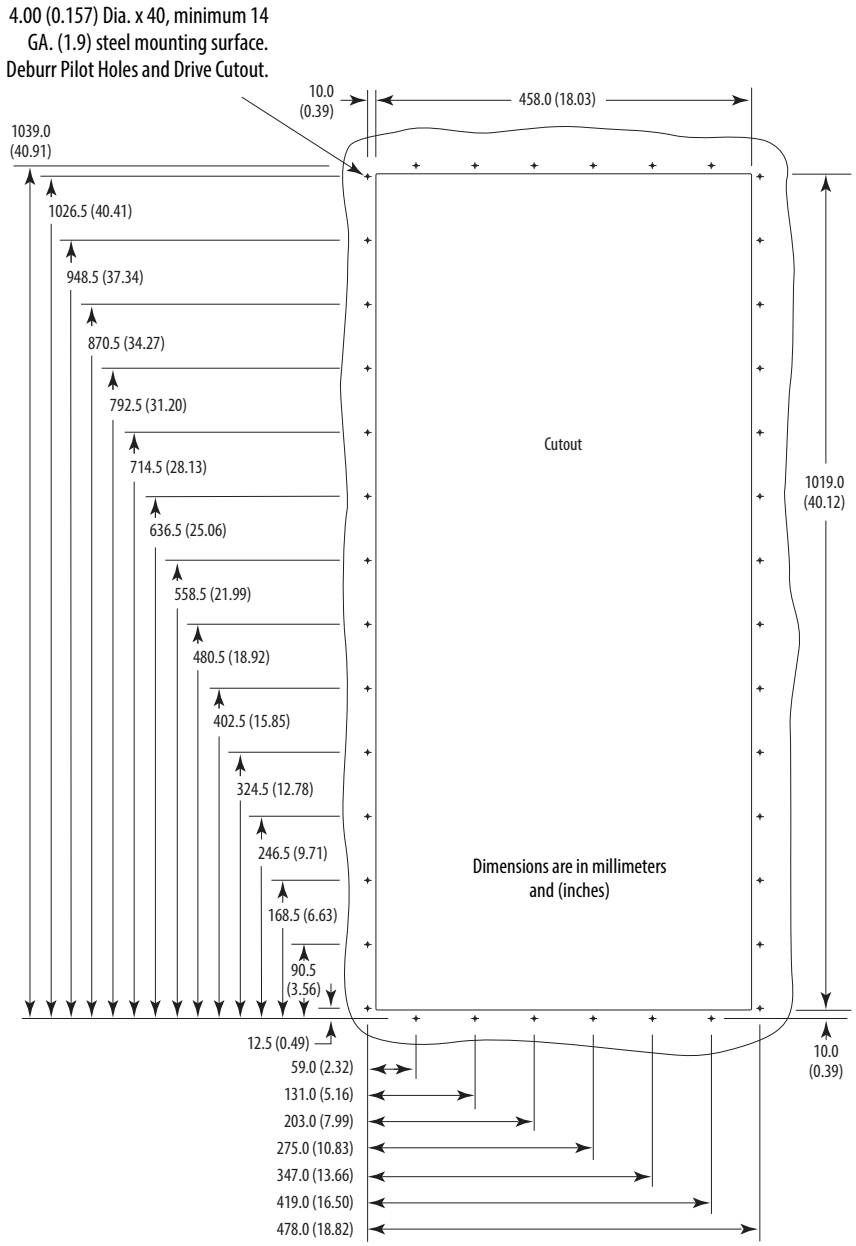

Frame 6 – IP20, NEMA / UL Type 1

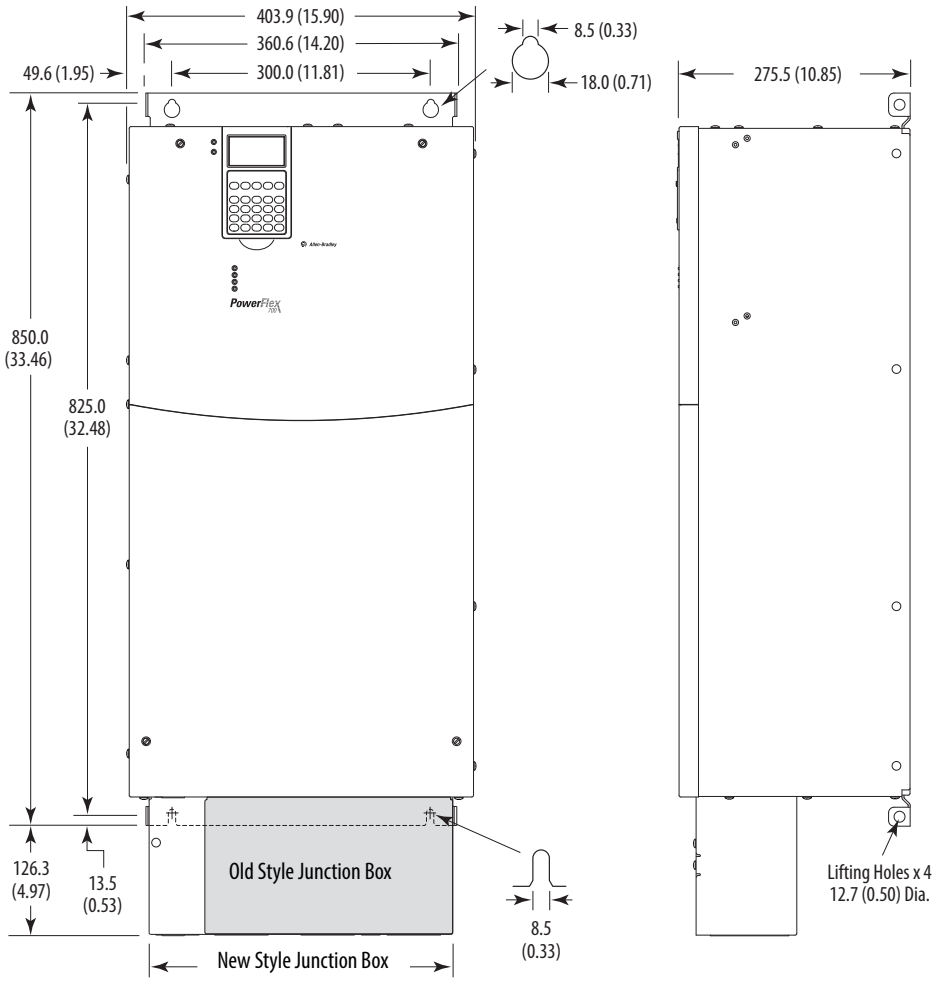

Junction Box can be removed if drive is mounted in a cabinet

Dimensions are in millimeters and (inches)

Frame	Approx. Weight (1) kg (lbs.)	
	Drive	Drive & Packaging
6	71.44 (157.5)	100.9 (222.0)

(1) Weights include HIM and Standard I/O. Add 13.60 kg (30.0 lbs.) for; 20BB260, 20BC260 and 20BD248.

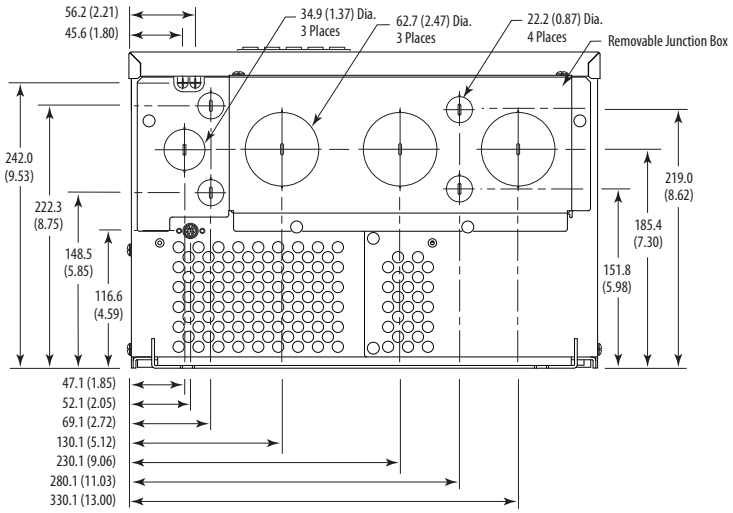

Frame 6 – IP54, NEMA Type 12 Standalone (400…690V drives only)

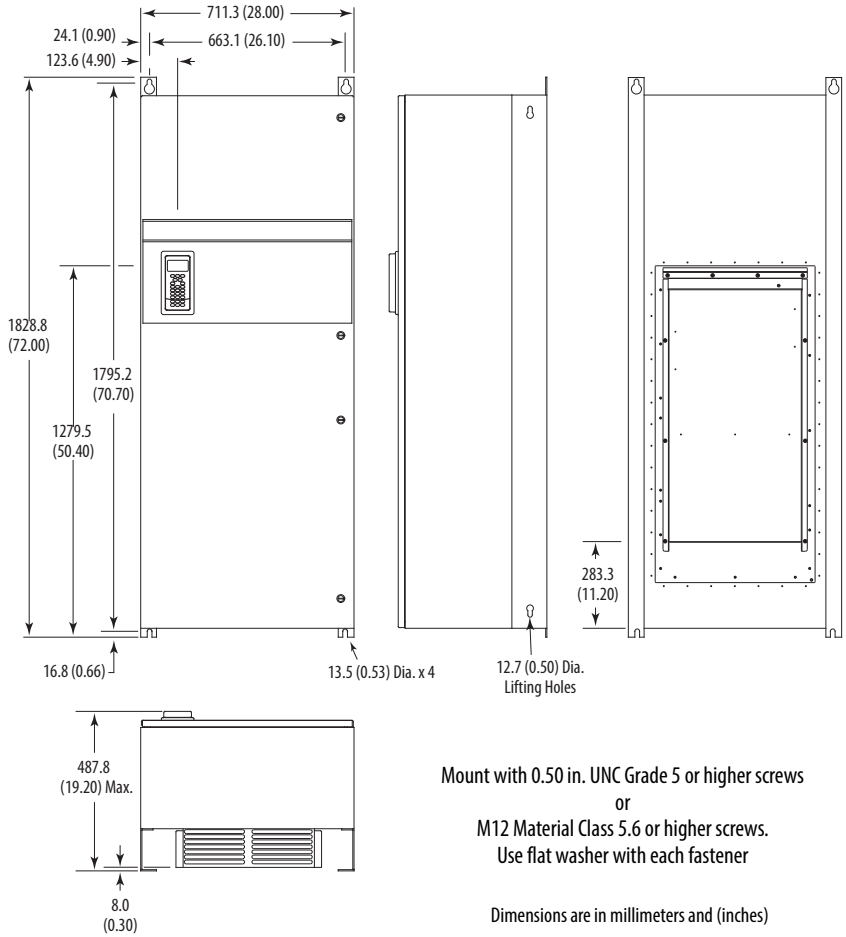

Frame	Description	Approx. Weight (1) kg (lbs.)	
		Drive	Drive & Packaging
6	Standalone	176.90 (390.0)	229.07 (505.0)

(1) Weights include HIM and Standard I/O.

Frame 6 – IP54, NEMA Type 12 Flange Mount (400…690V drives only)

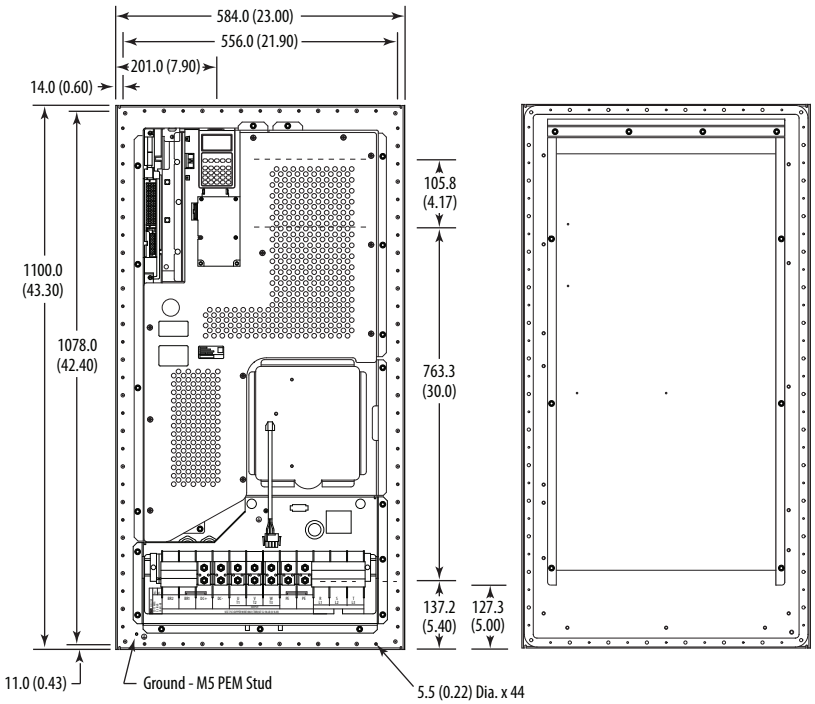

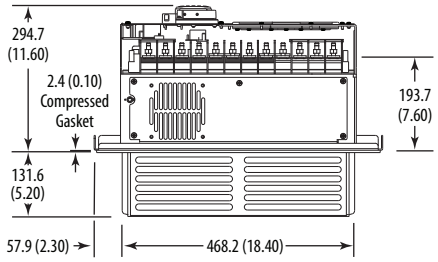

Dimensions are in millimeters and (inches)

Frame	Description	Approx. Weight [1] kg (lbs.)	
		Drive	Drive & Packaging
6	Flange Mount	99.79 (220.0)	119.75 (264.0)

(1) Weights include HIM and Standard I/O.

Frame 6 – Flange Mount Cutout

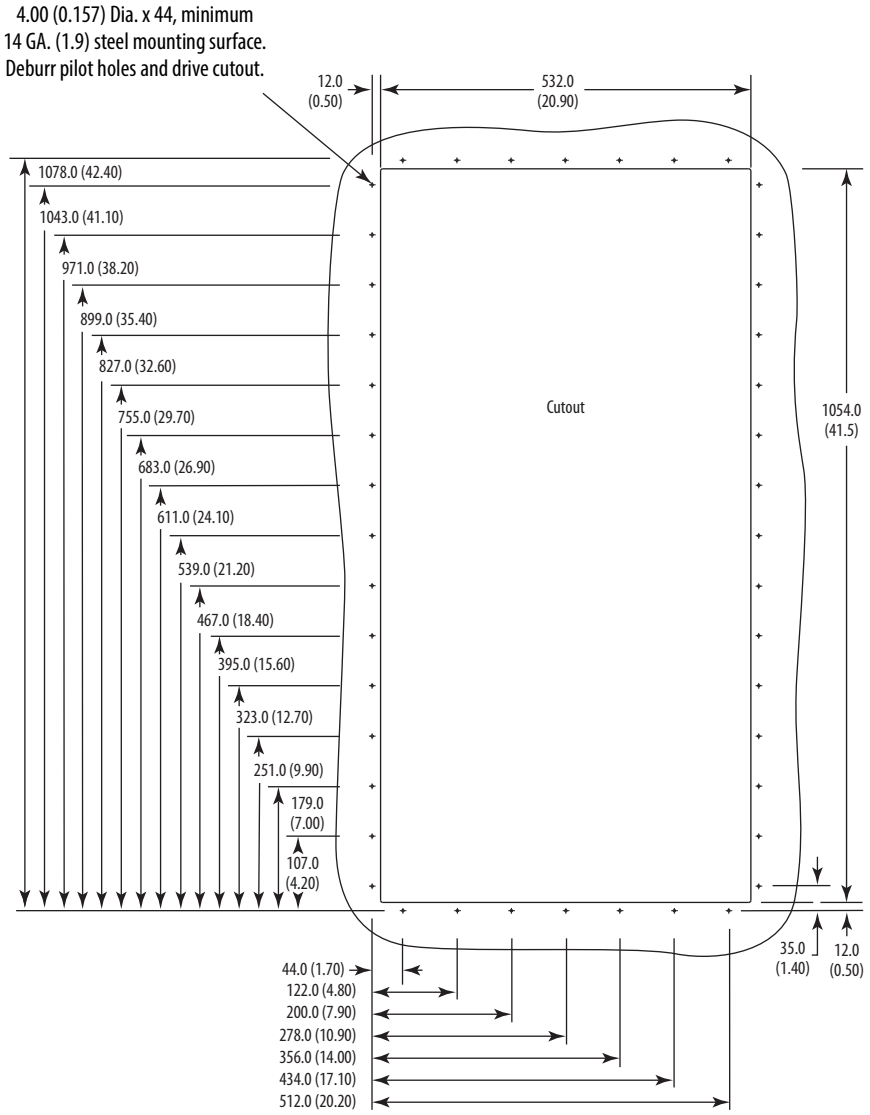

Dimensions are in millimeters and (inches)

Frame 7 – IP20, NEMA / UL Type 1

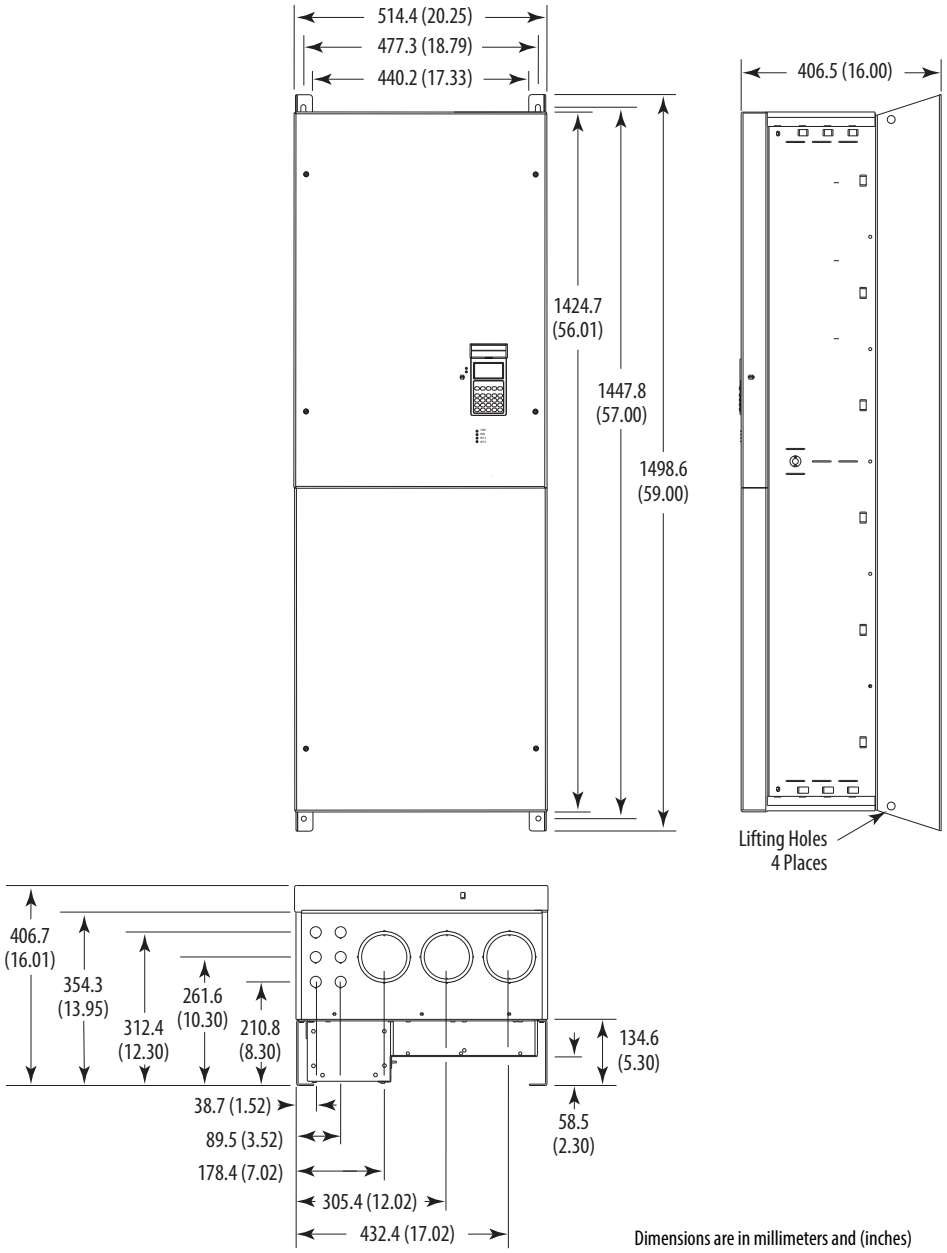

Approx. Weight kg (lbs.)	
Drive	**Drive & Packaging**
170 (375)	196 (433)

Frame 7 – IP00, NEMA / UL Type Open

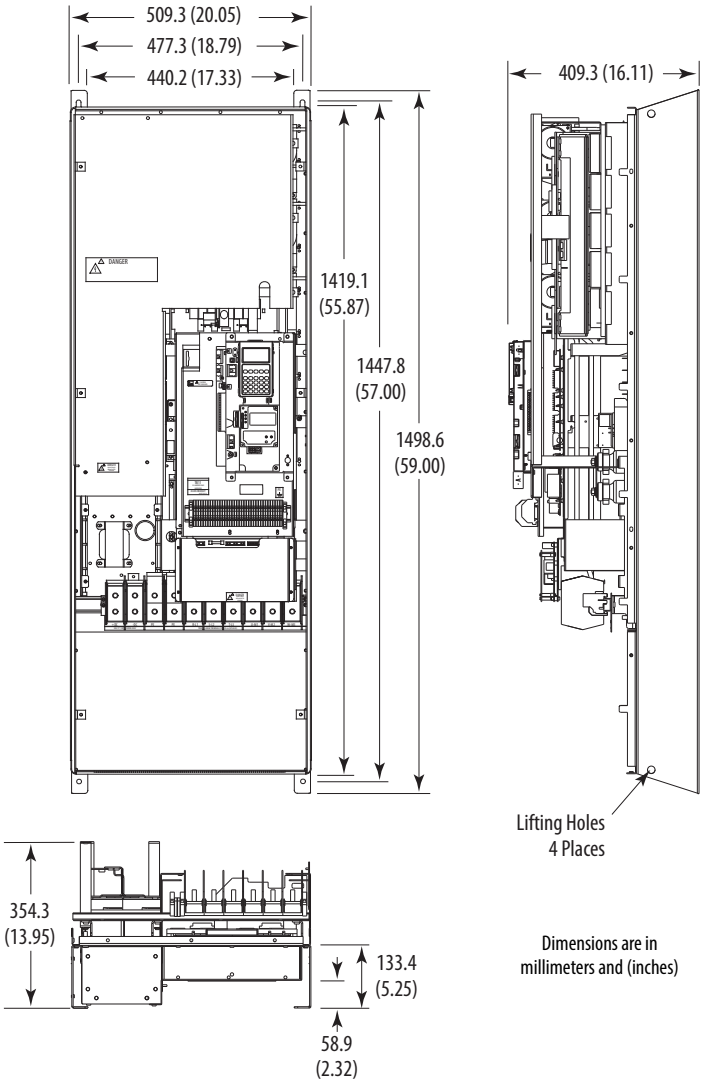

Approx. Weight kg (lbs.)	
Drive	**Drive & Packaging**
147 (324)	173 (382)

Frame 7 – Flange Mount Cutout

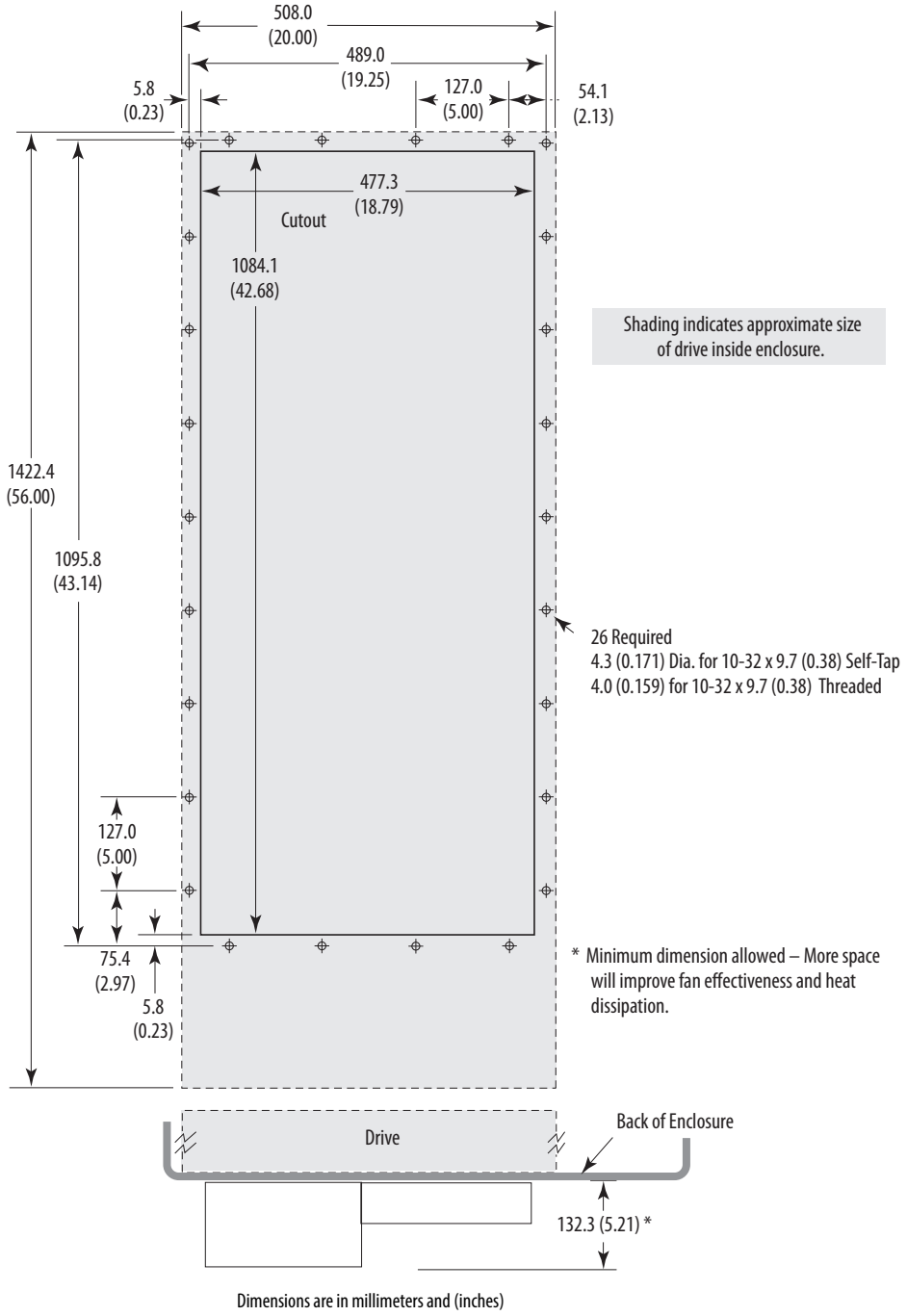

IMPORTANT Use gasket kit catalog number SK-G1-GASKET1-F7 with user supplied IP54, NEMA / UL Type 12 enclosure.

Frames 8…9 – IP20, NEMA / UL Type 1

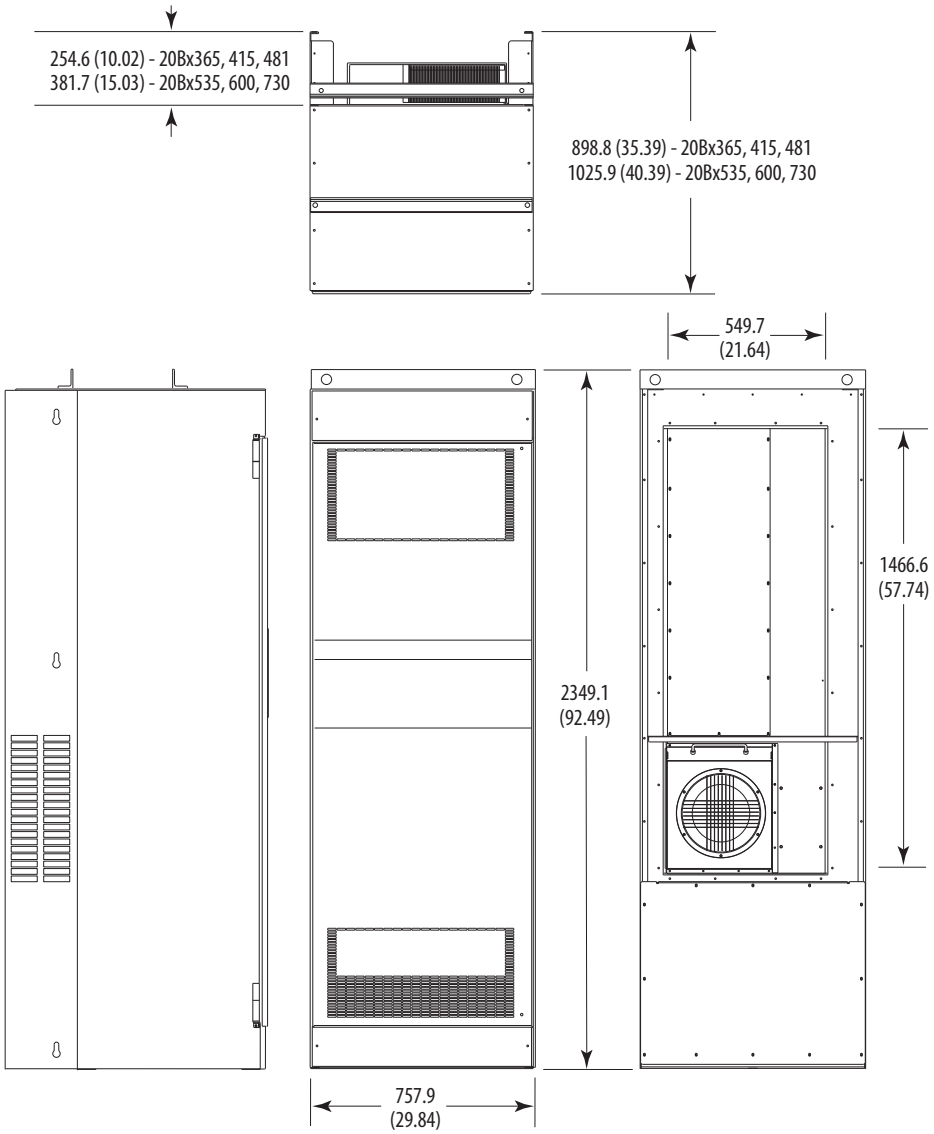

Dimensions are in millimeters and (inches)

Approx. Weight kg (lbs.)		
Frame	**Drive**	**Drive & Packaging**
8	509 (1122)	556 (1225)
9	526 (1159)	603 (1262)

Frames 8…9 – IP00, NEMA / UL Type Open

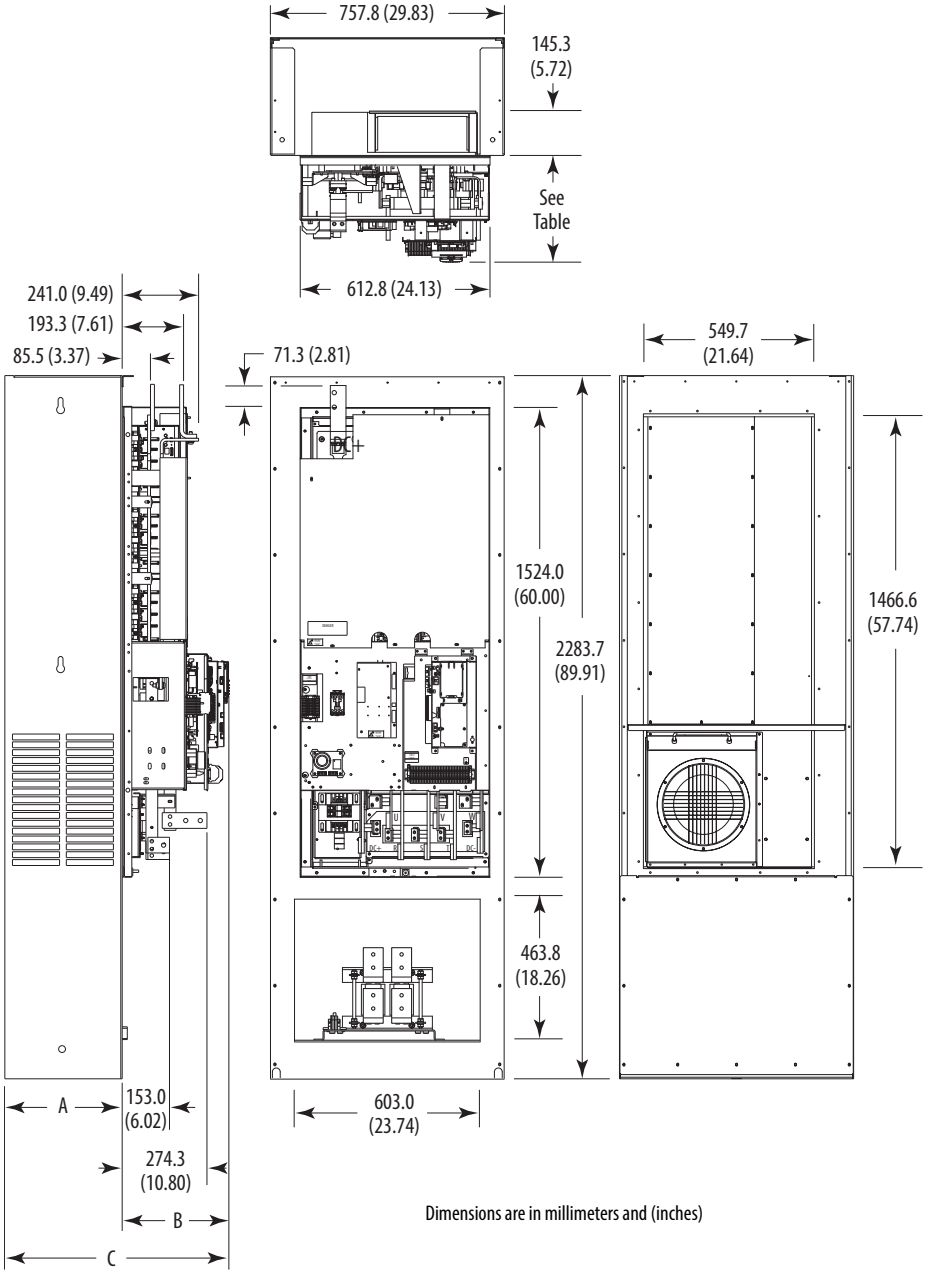

Dimensions are in millimeters and (inches)

Frame	Cat. No.	A	B	C	Approx. Weight kg (lbs.)	
					Drive	Drive & Packaging
8	20Bx365, 415, 481	254.6 (10.02)	345.3 (13.59)	599.4 (23.60)	384 (847)	431 (950)
	20Bx535, 600	381.7 (15.03)	345.5 (13.60)	726.6 (28.61)	384 (847)	431 (950)
9	20Bx730	381.1 (15.00)	345.3 (13.60)	771.9 (30.39)	401 (884)	448 (987)

Frames 8…9 – Converting an IP00 Drive for Flange Mounting

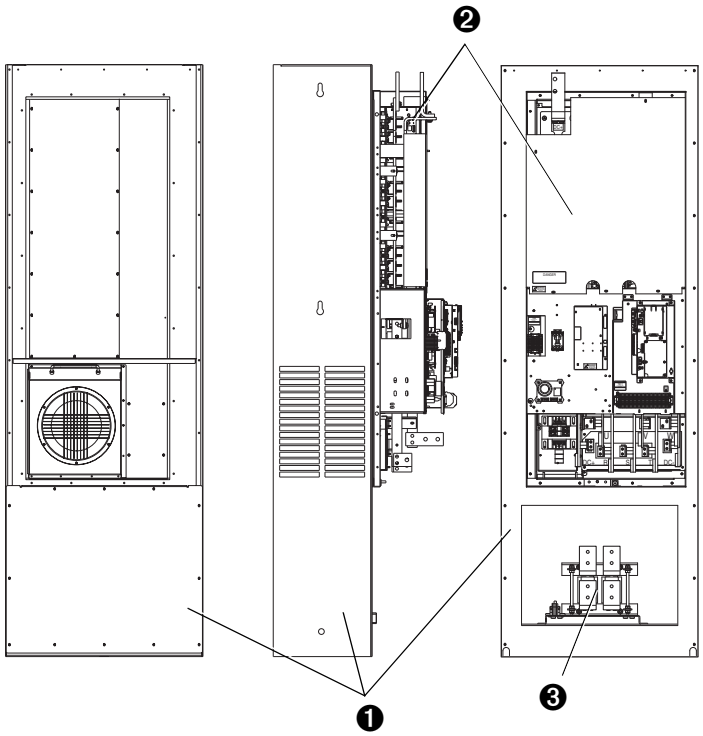

No.	Component
❶	Remove these IP00 enclosure components.
❷	Drive assembly to be flange mounted.
❸	DC link choke - mounts separately in enclosure (see page 72 for dimensions) and is wired directly to drive.

Frames 8…9 Roll-In – IP00, NEMA / UL Type Open

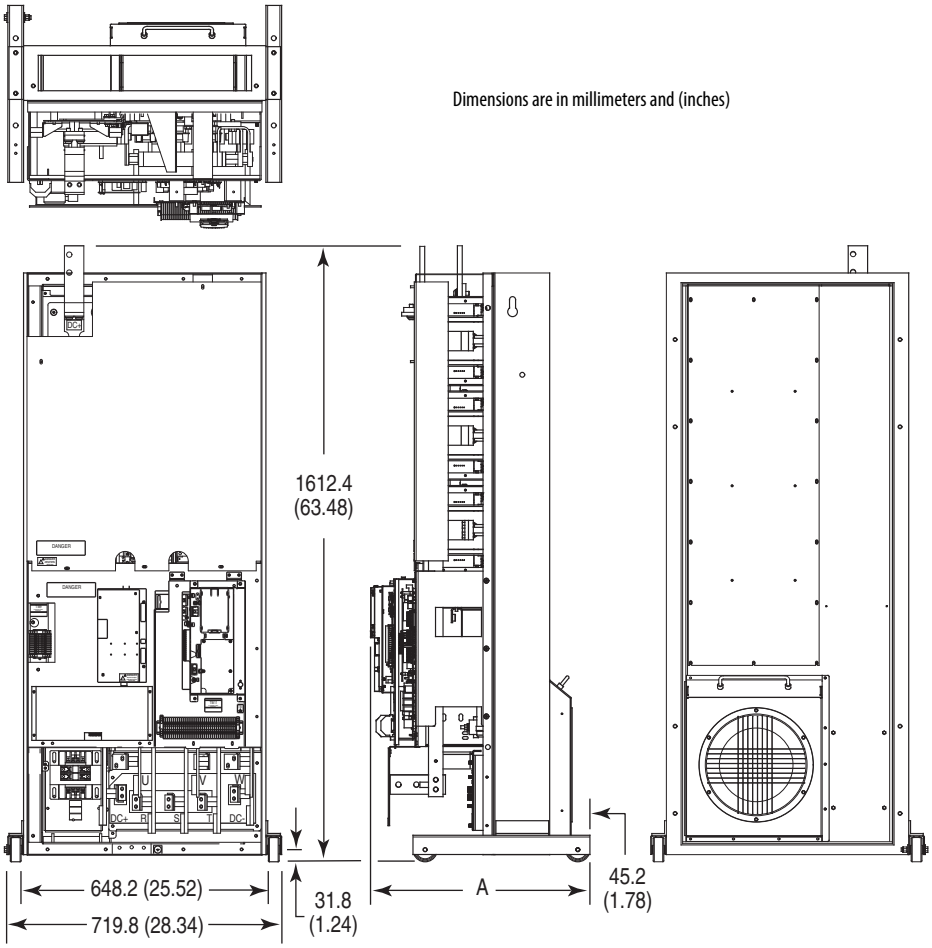

Frame	Cat. No.	A	Approx. Weight kg (lbs.)	
			Drive	Drive & Packaging
8	20Bx365, 415, 481	574.8 (22.63)	250 (552)	297 (655)
8	20Bx535, 600	574.8 (22.63)	250 (552)	297 (655)
9	20Bx730	594.3 (23.40)	267 (589)	314 (692)

Frames 8…9 Roll-In Mounting Considerations

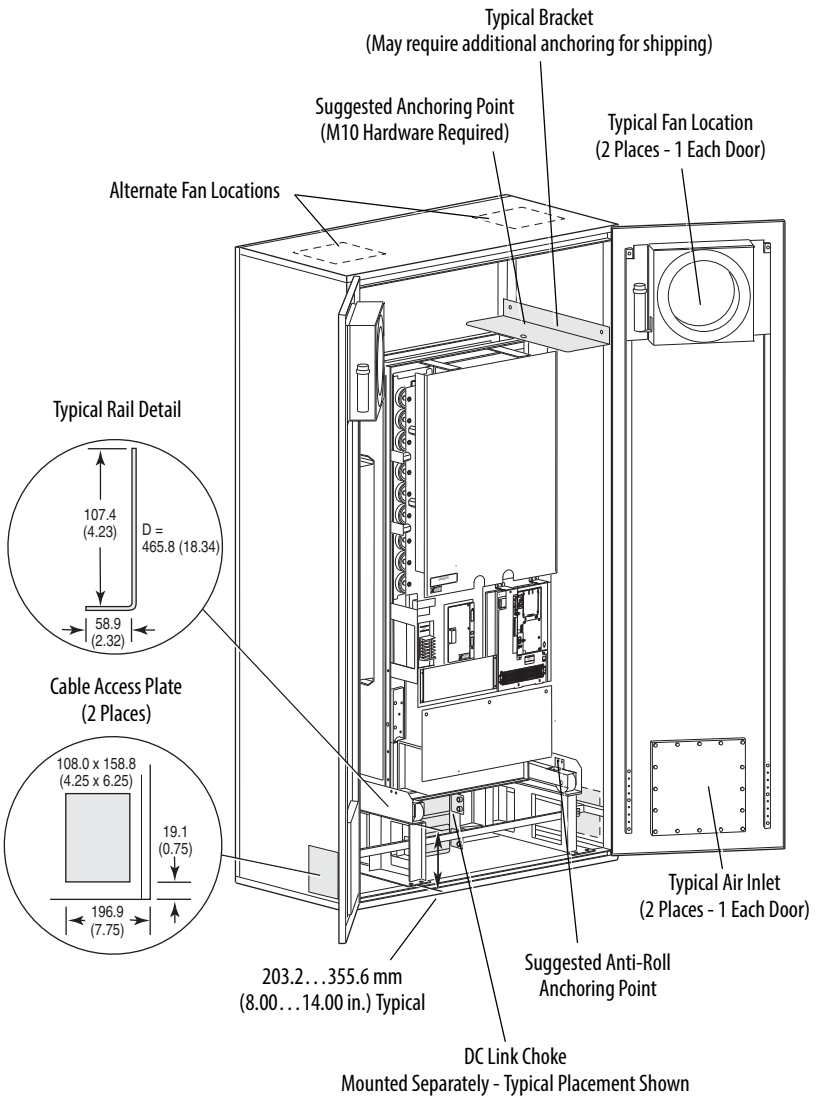

IMPORTANT This information illustrates how an open roll-in style drive could be mounted in a user supplied enclosure. Illustrations are intended only to identify structural mounting points and hardware shapes. You must design and fabricate steel components based on the actual mounting configuration, calculated loads and enclosure specifications. Minimum thickness of all parts = 4.6 mm (0.18 in.).

Frames 8…9 Flange Mount Cutout

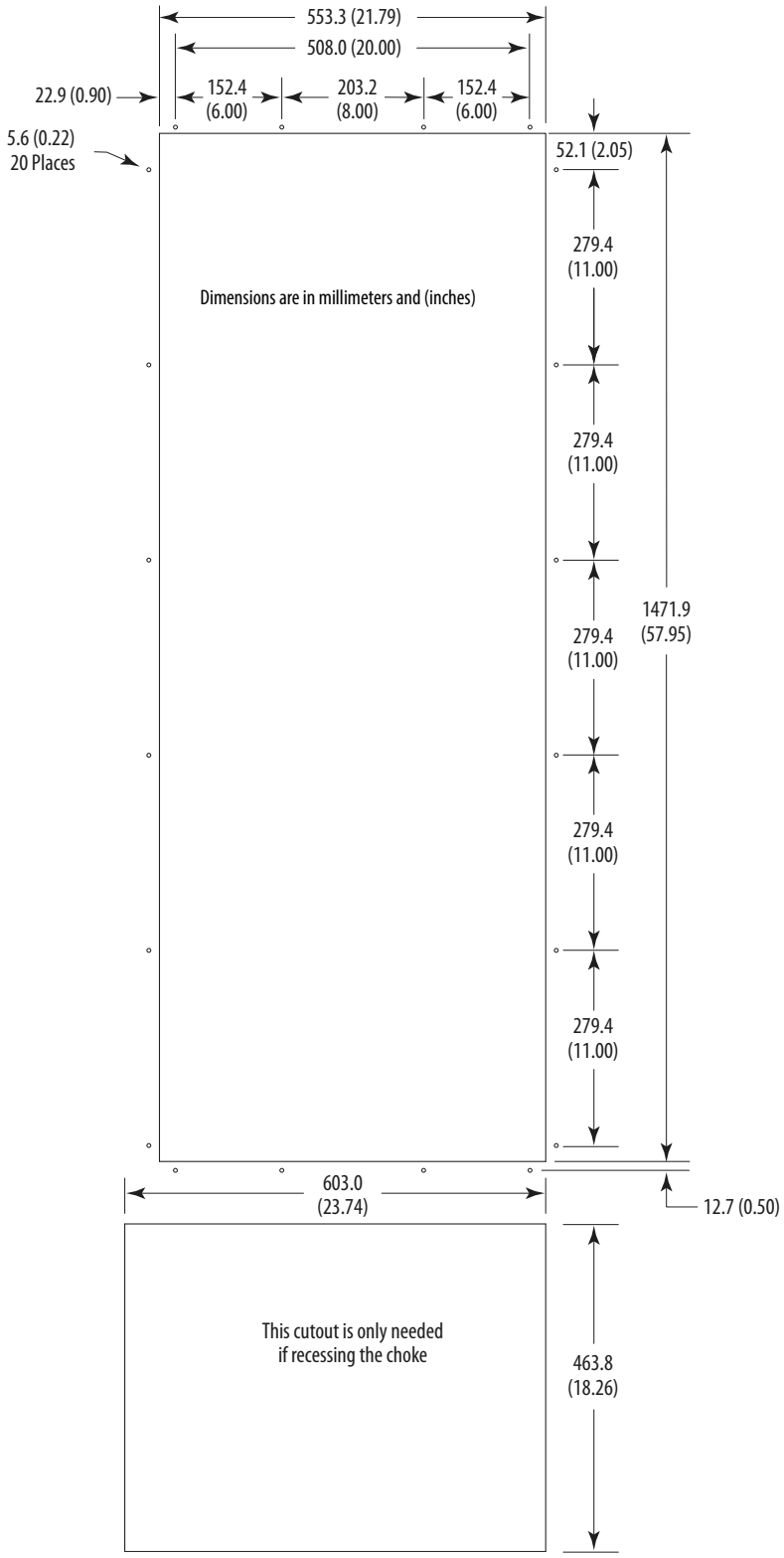

IMPORTANT	Use gasket kit catalog number SK-G1-GASKET1-F89 with user supplied IP54, NEMA / UL Type 12 enclosure.

DC Link Chokes

Frame 8

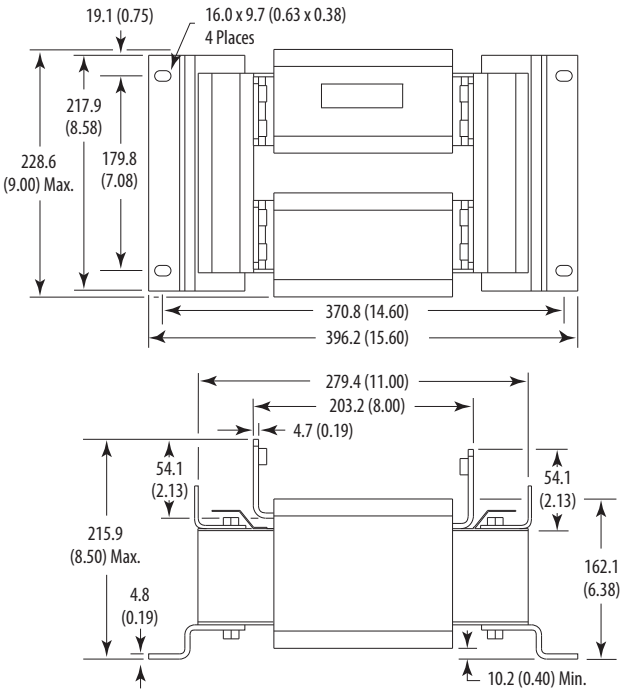

Frame 9

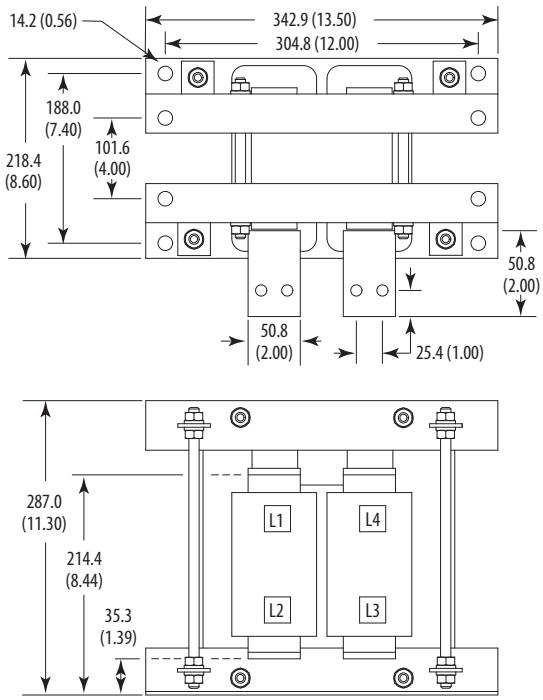

Frame 10

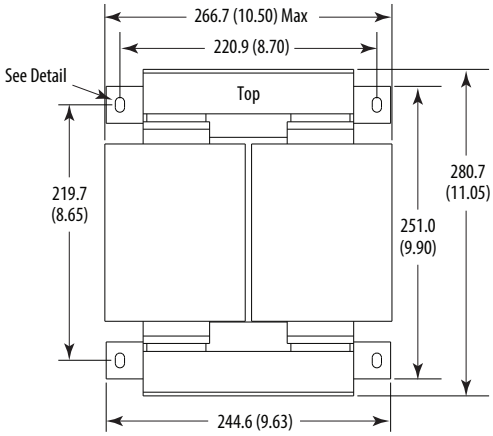

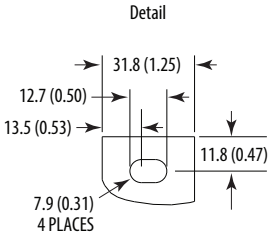

Dimensions are in millimeters and (inches)

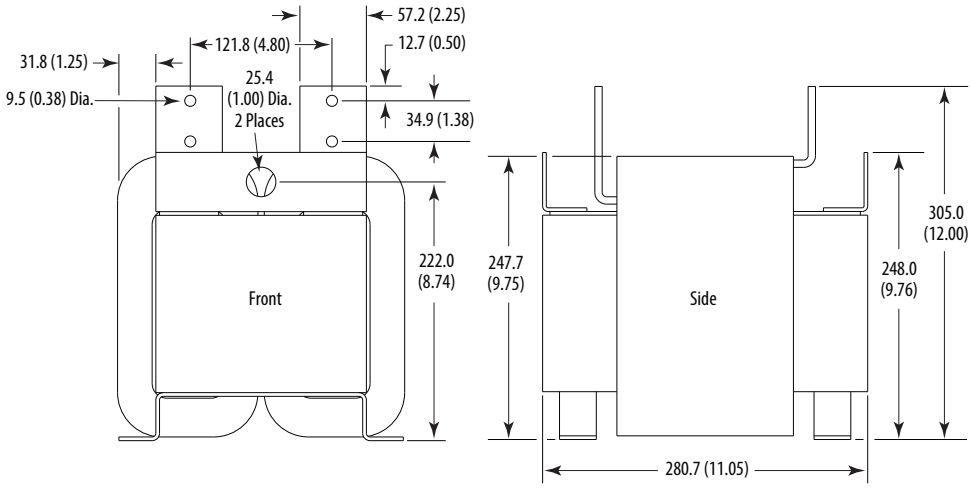

Frame 10 – IP20, NEMA / UL Type 1

AC Input Shown, for DC Input Dimensions use the Inverter (Left) Bay

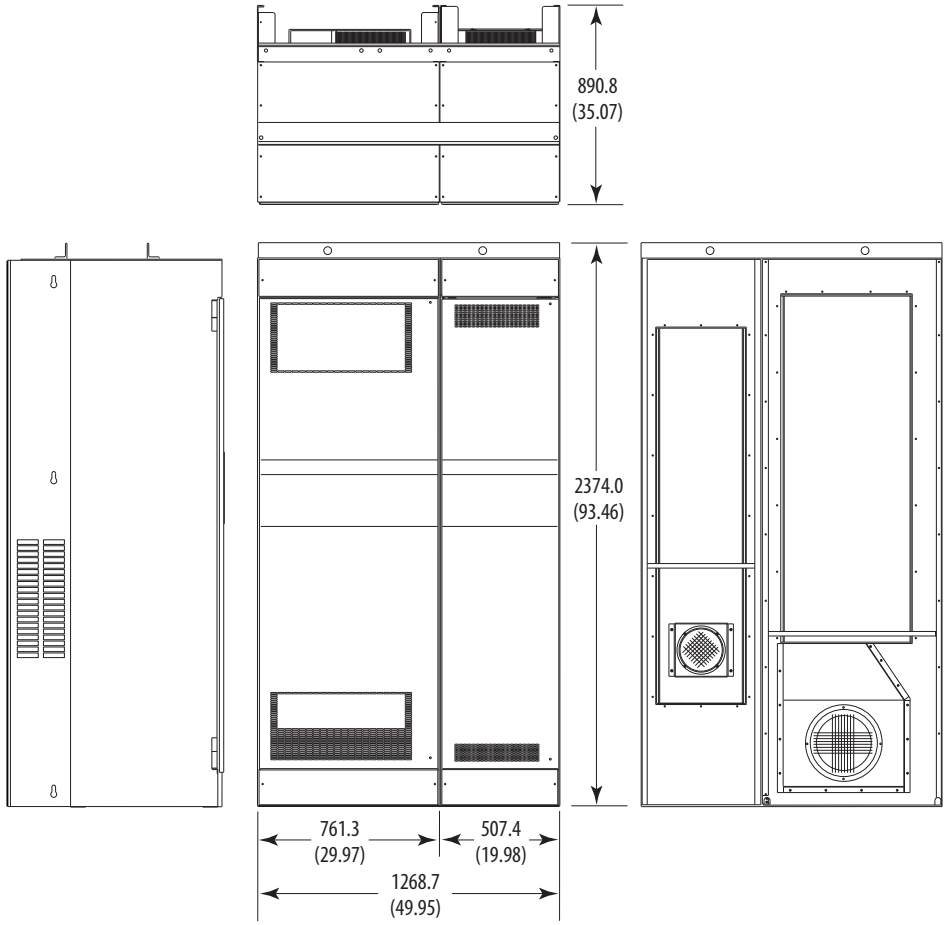

Dimensions are in millimeters and (inches)

Approx. Weight kg (lbs.)		
Type	**Drive**	**Drive & Packaging**
DC Input	468 (1032)	515 (1135)
AC Input	867 (1912)	958 (2112)

Frame 10 – IP00, NEMA / UL Type Open

AC Input Shown, for DC Input Dimensions use the Inverter (Left) Bay

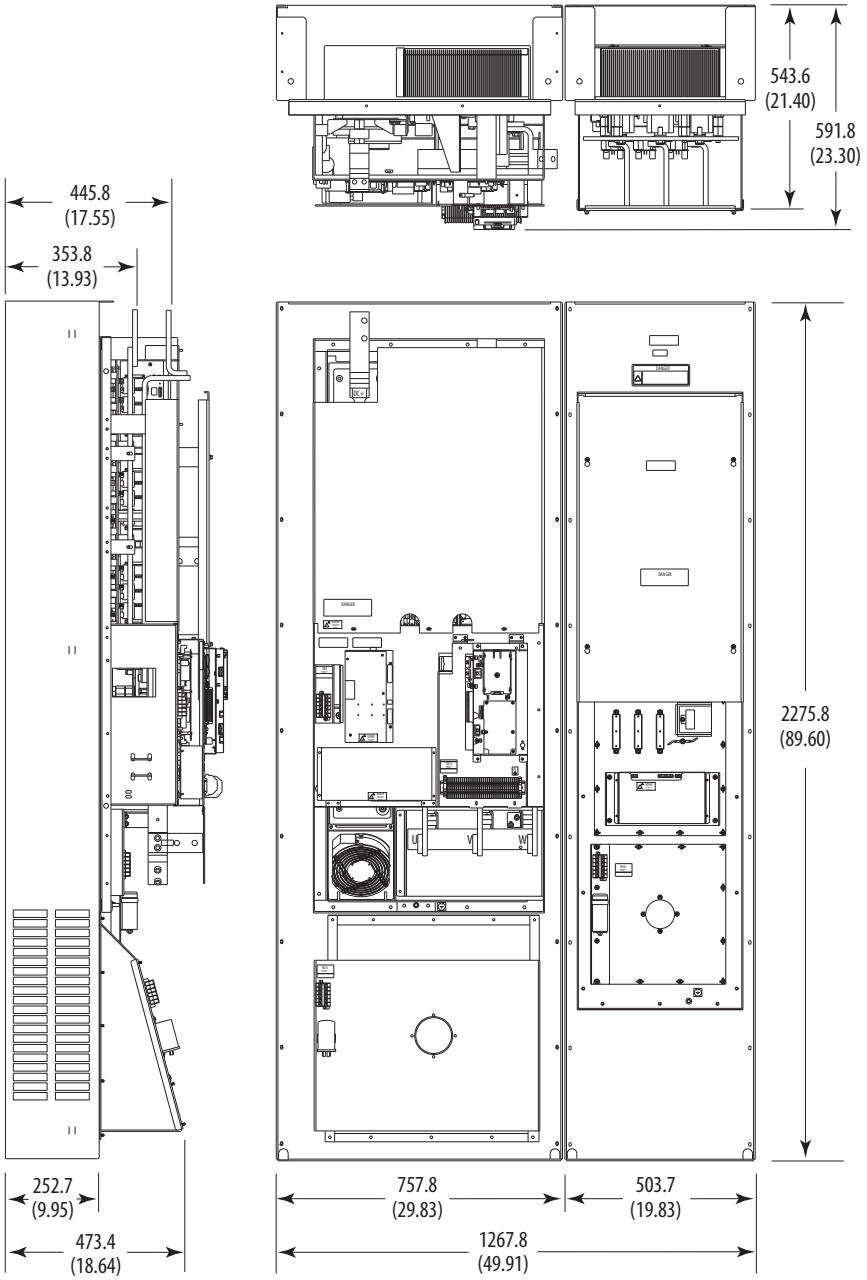

Dimensions are in millimeters and (inches)

Approx. Weight kg (lbs.)		
Type	**Drive**	**Drive & Packaging**
DC Input	305 (672)	352 (775)
AC Input	532 (1172)	623 (1372)

Frame 10 – Flange Mount Cutout

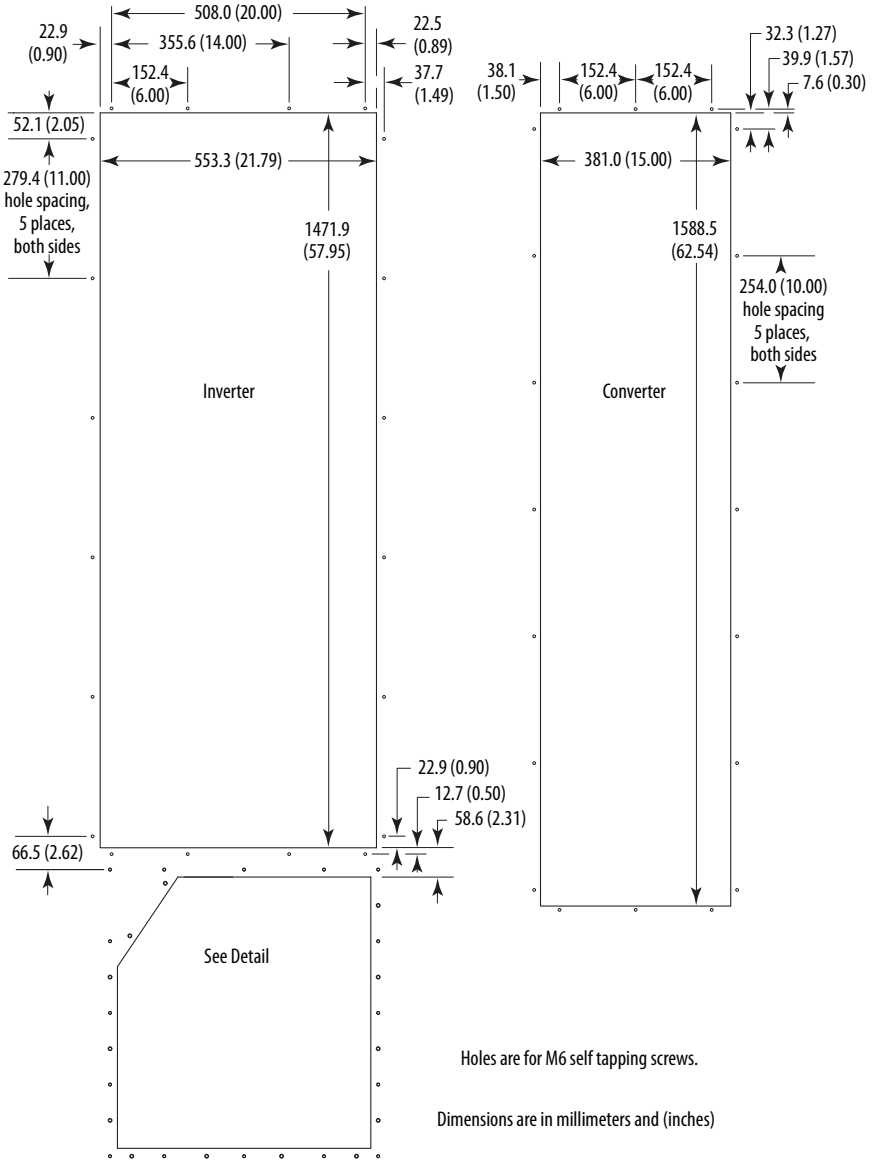

IMPORTANT Backplate and extension are a single piece. Drive chassis can be removed from backplate to mount in user supplied IP54, NEMA / UL Type 12 enclosure.

Frame 10 – Flange Mount Cutout Detail

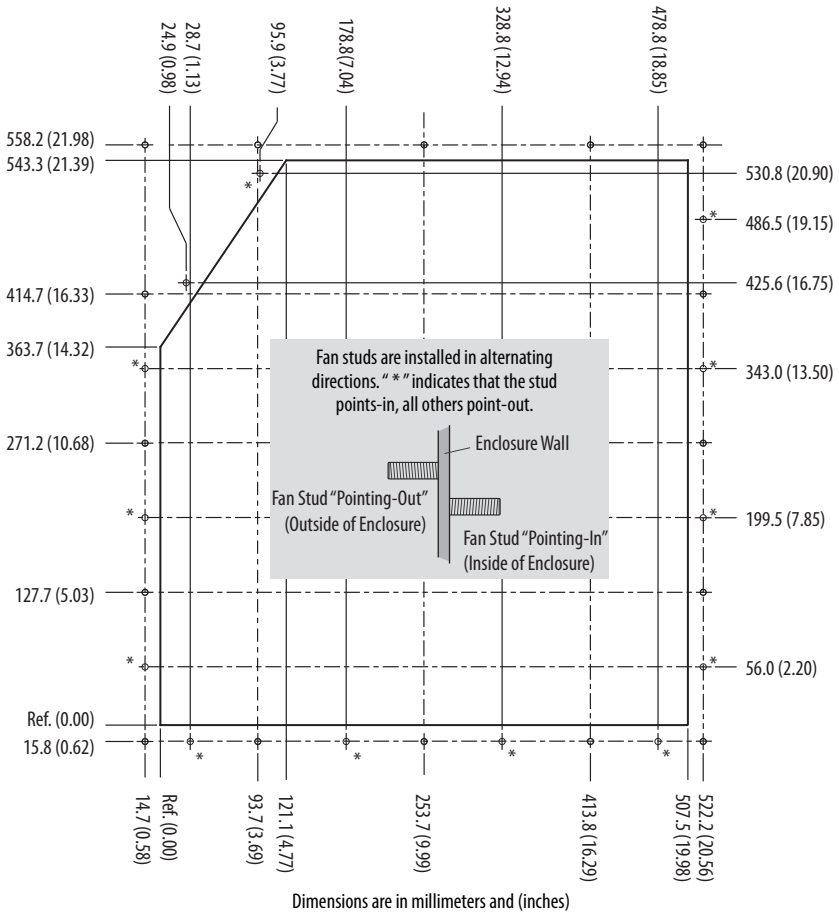

IMPORTANT	Backplate and extension are a single piece. Drive chassis can be removed from backplate to mount in user supplied IP54, NEMA / UL Type 12 enclosure.

PowerFlex 700 Packaged Drives

Product Description

PowerFlex 700 Packaged Drives are ideal for global Original Equipment Manufacturers (OEM) and end users with special installation needs. This program simplifies installation and start-up by allowing users to order drive packages that combine operator interface, control, communications and power options in pre-configured assemblies. Designed to meet customer demands for space savings, application flexibility and reliability, Packaged PowerFlex 700 AC drives offer a number of commonly requested pre-engineered options, as well as more complex custom-engineered packages.

Benefits

- Simplified installation and start-up by use of common options assembled at the factory.
- Drive functionality exceeds options offered with a standard drive.
- Multiple packaging options specific to customer needs.
- Pre-engineered options for easy order entry, consistent manufacturing, high quality and reduced deliveries.
- Selectable configurations to meet application requirements.

Features

- Standard PowerFlex 700 AC drives and drive-related options.
- Six pulse and multi-pulse.
- Tuned harmonic filters.
- Enclosure options: Type 1, Type 12 (fan and filter or convection/AC), and Type 4 (indoor).
- Pre-engineered options.
- Custom/engineered solutions.
- UL panel recognition from the factory for pre-engineered options.

Options

- Drive Input Protection
- Input/Output Contactors
- Input/Output Line Reactors
- Bypass
- Control Power
- Control Interface and Feedback
- Communication
- Human Interface Module (HIM)
- Motor Interface
- Door Mounted Operator Devices

Please contact your local distributor or sales office for product availability.

Drive Options

Human Interface Modules

Description	Cat. No.
No HIM (Blank Plate), Handheld/Local (Drive Mount)	20-HIM-A0
LCD Display, Full Numeric Keypad, Handheld/Local (Drive Mount)	20-HIM-A3
Enhanced, LCD, Full Numeric Keypad, Handheld/Local (Drive Mount)	20-HIM-A6
Remote (Panel Mount) LCD Display, Full Numeric Keypad (1) (2)	20-HIM-C3S
Enhanced, LCD, Full Numeric Keypad ?‡	20-HIM-C6S

(1) IP66, NEMA Type 4X/12 - For indoor use only.

(2) Includes a 1202-C30 interface cable (3 meters) for connection to drive.

Human Interface Module Accessories

Description	Cat. No.
Bezel Kit for LCD HIMs, NEMA Type 1 (1)	20-HIM-B1
PowerFlex HIM Interface Cable, 1 m (39 in) (2)	20-HIM-H10
Comm Option Cable Kit (Male-Male)	
0.33 Meters (1.1 Feet)	1202-C03
1 Meter (3.3 Feet)	1202-C10
3 Meter (9.8 Feet)	1202-C30
9 Meter (29.5 Feet)	1202-C90
Cable Kit (Male-Female) (3)	
0.33 Meters (1.1 Feet)	1202-H03
1 Meter (3.3 Feet)	1202-H10
3 Meter (9.8 Feet)	1202-H30
9 Meter (29.5 Feet)	1202-H90
DPI Cable Kit with Connectors, Tools and 100 m (328 ft.) Cable	1202-CBL-KIT-100M
DPI Cable Connector Kit	1202-TB-KIT-SET
DPI/SCANport™ One toTwo Port Splitter Cable	1203-S03

(1) Includes a 1202-C30 interface cable (3 meters) for connection to drive.

(2) Required only when HIM is used as handheld or remote.

(3) Required in addition to 20-HIM-H10 for distances up to a total maximum of 10 Meters (32.8 Feet).

Communication Option Kits and Accessories

Description	Cat. No.
BACnet® MS/TP RS485 Communication Adapter	20-COMM-B
ControlNet Communication Adapter (Coax)	20-COMM-C
DeviceNet Communication Adapter	20-COMM-D
EtherNet/IP™ Communication Adapter	20-COMM-E
Dual-port EtherNet/IP™ Communication Adapter	20-COMM-ER (2)
HVAC Communication Adapter (Only Modbus RTU can be used)	20-COMM-H
CANopen® Communication Adapter	20-COMM-K
LonWorks® Communication Adapter	20-COMM-L
Modbus/TCP Communication Adapter	20-COMM-M
PROFIBUS™ DP Communication Adapter	20-COMM-P
ControlNet Communication Adapter (Fiber)	20-COMM-Q
Remote I/O Communication Adapter	20-COMM-R (3)
RS485 DF1 Communication Adapter	20-COMM-S
External Communications Kit Power Supply	20-XCOMM-AC-PS1
DPI External Communications Kit	20-XCOMM-DC-BASE
External DPI I/O Option Board (1)	20-XCOMM-IO-OPT1
Compact I/O™ Module (3 Channel)	1769-SM1
Serial Null Modem Adapter	1203-SNM
Smart Self-powered Serial Converter (RS232) includes 1203-SFC and 1202-C10 Cables	1203-SSS
Universal Serial Bus™ (USB) Converter includes 2 m USB, 20-HIM-H10 & 22-HIM-H10 Cables	1203-USB

(1) For use only with DPI External Communications Kits 20-XCOMM-DC-BASE.
(2) Contact your local Rockwell Automation sales office or Allen-Bradley distributor for availability.
(3) This item has Silver Series status. For information, refer to http://www.ab.com/silver.

Feedback Options

Description	Cat. No.
12V/5V Encoder (1)	20B-ENC-1

(1) Vector Control only.

Other Options

Description	Cat. No.
Removable I/O Terminal Block	SK-G9-TB1-S1
Removable Encoder Terminal Block	SK-G9-TB1-ENC1

PowerFlex 700 Control Option Kits

Control with I/O	Factory Installed Cat. Code #[2]	Cat. No.
Vector Control - 24V DC with:[1]		
60 Hz Maximum	NNAD	20B-VECT-C0AD
82 Hz Maximum	NNAX	20B-VECTB-C0AX
Cascading Fan/Pump Control	NNAE	20B-VECT-C0AE
Pump Off (for Pump Jack)	NNBA	20B-VECTB-C0BA
Vector Control - 115V AC[1]	D[3]	20B-VECTB-D0
Vector Control - 115V AC with:[1]		
60 Hz Maximum	NNAD	20B-VECT-D0AD
82 Hz Maximum	NNAX	20B-VECTB-D0AX
Cascading Fan/Pump Control	NNAE	20B-VECT-D0AE
Pump Off (for Pump Jack)	NNBA	20B-VECT-D0BA

(1) Vector Control option utilizes DPI Only.
(2) This code is entered at the end of the drive catalog number (positions 17…20).
(3) This code is entered at position 15 of the drive catalog number.

Internal Dynamic Brake Resistor Kits

These resistors have a limited duty cycle. Refer to the PowerFlex Dynamic Braking Selection Guide to determine if an internal resistor will be sufficient for your application. An external resistor may be required.

Drive Input Voltage	Brake Resistance Ohms	Frame	Cat. No.
208…240V AC	62	0	20BB-DB1-0
	62	1 (except 7.5 Hp)	20BB-DB1-1
	22	1 (7.5 Hp)	20BB-DB2-1
	22	2	20BB-DB1-2
380…600V AC	115	0	20BD-DB1-0
	115	1	20BD-DB1-1
	68	2	20BD-DB1-2

Terminators

Description [1]	Cat. No.
for use with 3.7 kW (5 Hp) & below drives	1204-TFA1
for use with 1.5 kW (2 Hp) & up drives	1204-TFB2

(1) Refer to Appendix A of the Wiring and Grounding Guidelines for Pulse Width Modulated (PWM) AC Drives, publication Drives-IN001 for selection information.

Reflected Wave Reduction Modules w/Common Mode Choke

Description [1]	Cat. No.
17A with Common Mode Choke	1204-RWC-17-A

(1) Refer to Appendix A of the Wiring and Grounding Guidelines for Pulse Width Modulated (PWM) AC Drives, publication Drives-IN001 for selection information.

Isolation Transformers

For installations that have specific types of AC supply configurations or require drive protection due to AC line disturbances, isolation transformers are available.

IP32 (NEMA/UL Type 3R)

Motor Rating kW (Hp)	240V, 60 Hz, Three-Phase, 240V Primary & 240V Secondary	460V, 60 Hz, Three-Phase, 460V Primary & 460V Secondary	575V, 60 Hz, Three-Phase, 575V Primary & 575V Secondary
	Cat. No.	Cat. No.	Cat. No.
0.25 (0.33)	1321-3TW005-AA	1321-3TW005-BB	–
0.37 (0.5)	1321-3TW005-AA	1321-3TW005-BB	–
0.55 (0.75)	1321-3TW005-AA	1321-3TW005-BB	–
0.75 (1.0)	1321-3TW005-AA	1321-3TW005-BB	1321-3TW005-CC
1.1 (1.5)	1321-3TW005-AA	1321-3TW005-BB	–
1.5 (2.0)	1321-3TW005-AA	1321-3TW005-BB	1321-3TW005-CC
2.2 (3.0)	1321-3TW005-AA	1321-3TW005-BB	1321-3TW005-CC
4.0 (5.0)	1321-3TW007-AA	1321-3TW007-BB	1321-3TW007-CC
5.5 (7.5)	1321-3TW011-AA	1321-3TW011-BB	1321-3TW011-CC
7.5 (10)	1321-3TW014-AA	1321-3TW014-BB	1321-3TW014-CC
11 (15)	1321-3TW020-AA	1321-3TW020-BB	1321-3TW020-CC
15 (20)	1321-3TW027-AA	1321-3TW027-BB	1321-3TW027-CC
18.5 (25)	1321-3TW034-AA	1321-3TW034-BB	1321-3TW034-CC
22 (30)	1321-3TW040-AA	1321-3TW040-BB	1321-3TW040-CC
30 (40)	1321-3TW051-AA	1321-3TW051-BB	1321-3TW051-CC
37 (50)	1321-3TH063-AA	1321-3TH063-BB	1321-3TH063-CC
45 (60)	1321-3TH075-AA	1321-3TH075-BB	1321-3TH075-CC
55 (75)	1321-3TH093-AA	1321-3TH093-BB	1321-3TH093-CC
75 (100)	–	1321-3TH118-BB	1321-3TH118-CC
90 (125)	–	1321-3TH145-BB	1321-3TH145-CC
110 (150)	–	1321-3TH175-BB	1321-3TH175-CC
149 (200)	–	1321-3TH220-BB	1321-3TH220-CC
187 (250)	–	1321-3TH275-BB	1321-3TH275-CC
224 (300)	–	1321-3TH330-BB	1321-3TH330-CC
261 (350)	–	1321-3TH440-BB	1321-3TH440-CC
298 (400)	–	1321-3TH440-BB	1321-3TH440-CC
336 (450)	–	1321-3TH550-BB	1321-3TH550-CC
373 (500)	–	1321-3TH550-BB	1321-3TH550-CC
448 (600)	–	1321-3TH660-BB	1321-3TH660-CC
485 (650)	–	–	1321-3TH770-CC
522 (700)	–	1321-3TH770-BB	1321-3TH770-CC

Input/Output Line Reactors

For impedance matching, protection from AC line disturbances or motor protection, reactors are available for both the input and output sides of the drive.

240V, 60 Hz, Three-Phase, 3% Impedance

			Input Line Reactor[1]		Output Line Reactor[1]	
			IP00 (Open Style)	IP11 (NEMA/UL Type 1)	IP00 (Open Style)	IP11 (NEMA/UL Type 1)
Drive Cat. No.	Duty	Hp	Cat. No.	Cat. No.	Cat. No.	Cat. No.
20BB2P2	Heavy Duty	0.33	1321-3R2-D	1321-3RA2-D	1321-3R2-D	1321-3RA2-D
20BB2P2	Normal Duty	0.5	1321-3R2-D	1321-3RA2-D	1321-3R2-D	1321-3RA2-D
20BB4P2	Heavy Duty	0.75	1321-3R4-A	1321-3RA4-A	1321-3R4-A	1321-3RA4-A
20BB4P2	Normal Duty	1	1321-3R4-A	1321-3RA4-A	1321-3R4-A	1321-3RA4-A
20BB6P8	Heavy Duty	1.5	1321-3R8-B	1321-3RA8-B	1321-3R8-A	1321-3RA8-A
20BB6P8	Normal Duty	2	1321-3R8-A	1321-3RA8-A	1321-3R8-A	1321-3RA8-A
20BB9P6	Heavy Duty	2	1321-3R8-A	1321-3RA8-A	1321-3R12-A	1321-3RA12-A
20BB9P6	Normal Duty	3	1321-3R12-A	1321-3RA12-A	1321-3R12-A	1321-3RA12-A
20BB015	Heavy Duty	3	1321-3R12-A	1321-3RA12-A	1321-3R18-A	1321-3RA18-A
20BB015	Normal Duty	5	1321-3R18-A	1321-3RA18-A	1321-3R18-A	1321-3RA18-A
20BB022	Heavy Duty	5	1321-3R18-A	1321-3RA18-A	1321-3R25-A	1321-3RA25-A
20BB022	Normal Duty	7.5	1321-3R25-A	1321-3RA25-A	1321-3R25-A	1321-3RA25-A
20BB028	Heavy Duty	7.5	1321-3R25-A	1321-3RA25-A	1321-3R35-A	1321-3RA35-A
20BB028	Normal Duty	10	1321-3R35-A	1321-3RA35-A	1321-3R35-A	1321-3RA35-A
20BB042	Heavy Duty	10	1321-3R35-A	1321-3RA35-A	1321-3R45-A	1321-3RA45-A
20BB042	Normal Duty	15	1321-3R45-A	1321-3RA45-A	1321-3R45-A	1321-3RA45-A
20BB052	Heavy Duty	15	1321-3R45-A	1321-3RA45-A	1321-3R55-A	1321-3RA55-A
20BB052	Normal Duty	20	1321-3R55-A	1321-3RA55-A	1321-3R55-A	1321-3RA55-A
20BB070	Heavy Duty	20	1321-3R55-A	1321-3RA55-A	1321-3R80-A	1321-3RA80-A
20BB070	Normal Duty	25	1321-3R80-A	1321-3RA80-A	1321-3R80-A	1321-3RA80-A
20BB080	Heavy Duty	25	1321-3R80-A	1321-3RA80-A	1321-3R80-A	1321-3RA80-A
20BB080	Normal Duty	30	1321-3R80-A	1321-3RA80-A	1321-3R80-A	1321-3RA80-A
20BB104	Heavy Duty	30	1321-3R80-A	1321-3RA80-A	1321-3R80-A	1321-3RA80-A
20BB104	Normal Duty	40	1321-3R100-A	1321-3RA100-A	1321-3R100-A	1321-3RA100-A
20BB130	Heavy Duty	40	1321-3R100-A	1321-3RA100-A	1321-3R100-A	1321-3RA100-A
20BB130	Normal Duty	50	1321-3R130-A	1321-3RA130-A	1321-3R130-A	1321-3RA130-A
20BB154	Heavy Duty	50	1321-3R130-A	1321-3RA130-A	1321-3R130-A	1321-3RA130-A
20BB154	Normal Duty	60	1321-3R160-A	1321-3RA160-A	1321-3R160-A	1321-3RA160-A
20BB192	Heavy Duty	60	1321-3R160-A	1321-3RA160-A	1321-3R160-A	1321-3RA160-A
20BB192	Normal Duty	75	1321-3R200-A	1321-3RA200-A	1321-3R200-A	1321-3RA200-A
20BB260	Heavy Duty	75	1321-3R200-A	1321-3RA200-A	1321-3R200-A	1321-3RA200-A
20BB260	Normal Duty	100	1321-3RB250-A	1321-3RAB250-A	1321-3RB250-A	1321-3RAB250-A

(1) Input line reactors were sized based on the NEC fundamental motor amps. Output line reactors were sized based on the VFD rated output currents.

240V, 60 Hz, Three-Phase, 5% Impedance

			Input Line Reactor(1)		Output Line Reactor(1)	
			IP00 (Open Style)	IP11 (NEMA/UL Type 1)	IP00 (Open Style)	IP11 (NEMA/UL Type 1)
Drive Cat. No.	Duty	Hp	Cat. No.	Cat. No.	Cat. No.	Cat. No.
20BB2P2	Heavy Duty	0.33	1321-3R2-A	1321-3RA2-A	1321-3R2-A	1321-3RA2-A
20BB2P2	Normal Duty	0.5	1321-3R2-A	1321-3RA2-A	1321-3R2-A	1321-3RA2-A
20BB4P2	Heavy Duty	0.75	1321-3R4-B	1321-3RA4-B	1321-3R4-B	1321-3RA4-B
20BB4P2	Normal Duty	1	1321-3R4-B	1321-3RA4-B	1321-3R4-B	1321-3RA4-B
20BB6P8	Heavy Duty	1.5	1321-3R8-B	1321-3RA8-B	1321-3R8-B	1321-3RA8-B
20BB6P8	Normal Duty	2	1321-3R8-B	1321-3RA8-B	1321-3R8-B	1321-3RA8-B
20BB9P6	Heavy Duty	2	1321-3R8-B	1321-3RA8-B	1321-3R12-B	1321-3RA12-B
20BB9P6	Normal Duty	3	1321-3R12-B	1321-3RA12-B	1321-3R12-B	1321-3RA12-B
20BB015	Heavy Duty	3	1321-3R12-B	1321-3RA12-B	1321-3R18-B	1321-3RA18-B
20BB015	Normal Duty	5	1321-3R18-B	1321-3RA18-B	1321-3R18-B	1321-3RA18-B
20BB022	Heavy Duty	5	1321-3R18-B	1321-3RA18-B	1321-3R25-B	1321-3RA25-B
20BB022	Normal Duty	7.5	1321-3R25-B	1321-3RA25-B	1321-3R25-B	1321-3RA25-B
20BB028	Heavy Duty	7.5	1321-3R25-B	1321-3RA25-B	1321-3R35-B	1321-3RA35-B
20BB028	Normal Duty	10	1321-3R35-B	1321-3RA35-B	1321-3R35-B	1321-3RA35-B
20BB042	Heavy Duty	10	1321-3R35-B	1321-3RA35-B	1321-3R45-B	1321-3RA45-B
20BB042	Normal Duty	15	1321-3R45-B	1321-3RA45-B	1321-3R45-B	1321-3RA45-B
20BB052	Heavy Duty	15	1321-3R45-B	1321-3RA45-B	1321-3R55-B	1321-3RA55-B
20BB052	Normal Duty	20	1321-3R55-B	1321-3RA55-B	1321-3R55-B	1321-3RA55-B
20BB070	Heavy Duty	20	1321-3R55-B	1321-3RA55-B	1321-3R80-B	1321-3RA80-B
20BB070	Normal Duty	25	1321-3R80-B	1321-3RA80-B	1321-3R80-B	1321-3RA80-B
20BB080	Heavy Duty	25	1321-3R80-B	1321-3RA80-B	1321-3R80-B	1321-3RA80-B
20BB080	Normal Duty	30	1321-3R80-B	1321-3RA80-B	1321-3R80-B	1321-3RA80-B
20BB104	Heavy Duty	30	1321-3R80-B	1321-3RA80-B	1321-3R80-B	1321-3RA80-B
20BB104	Normal Duty	40	1321-3R100-B	1321-3RA100-B	1321-3R100-B	1321-3RA100-B
20BB130	Heavy Duty	40	1321-3R100-B	1321-3RA100-B	1321-3R100-B	1321-3RA100-B
20BB130	Normal Duty	50	1321-3R130-B	1321-3RA130-B	1321-3R130-B	1321-3RA130-B
20BB154	Heavy Duty	50	1321-3R130-B	1321-3RA130-B	1321-3R130-B	1321-3RA130-B
20BB154	Normal Duty	60	1321-3R160-B	1321-3RA160-B	1321-3R160-B	1321-3RA160-B
20BB192	Heavy Duty	60	1321-3R160-B	1321-3RA160-B	1321-3R160-B	1321-3RA160-B
20BB192	Normal Duty	75	1321-3R200-B	1321-3RA200-B	1321-3R200-B	1321-3RA200-B
20BB260	Heavy Duty	75	1321-3R200-B	1321-3RA200-B	1321-3R200-B	1321-3RA200-B
20BB260	Normal Duty	100	1321-3RB250-B	1321-3RAB250-B	1321-3RB250-B	1321-3RAB250-B

(1) Input line reactors were sized based on the NEC fundamental motor amps. Output line reactors were sized based on the VFD rated output currents.

480V, 60 Hz, Three-Phase, 3% Impedance

			Input Line Reactor[1]		Output Line Reactor[1]	
			IP00 (Open Style)	IP11 (NEMA/UL Type 1)	IP00 (Open Style)	IP11 (NEMA/UL Type 1)
Drive Cat. No.	Duty	Hp	Cat. No.	Cat. No.	Cat. No.	Cat. No.
20BD1P1	Heavy Duty	0.33	1321-3R1-C	1321-3RA1-C	1321-3R2-B	1321-3RA2-B
20BD1P1	Normal Duty	0.5	1321-3R1-C	1321-3RA1-C	1321-3R2-B	1321-3RA2-B
20BD2P1	Heavy Duty	0.75	1321-3R2-A	1321-3RA2-A	1321-3R2-A	1321-3RA2-A
20BD2P1	Normal Duty	1	1321-3R2-A	1321-3RA2-A	1321-3R2-A	1321-3RA2-A
20BD3P4	Heavy Duty	1.5	1321-3R4-C	1321-3RA4-C	1321-3R4-B	1321-3RA4-B
20BD3P4	Normal Duty	2	1321-3R4-B	1321-3RA4-B	1321-3R4-B	1321-3RA4-B
20BD5P0	Heavy Duty	2	1321-3R4-B	1321-3RA4-B	1321-3R8-C	1321-3RA8-C
20BD5P0	Normal Duty	3	1321-3R8-C	1321-3RA8-C	1321-3R8-C	1321-3RA8-C
20BD8P0	Heavy Duty	3	1321-3R8-C	1321-3RA8-C	1321-3R8-B	1321-3RA8-B
20BD8P0	Normal Duty	5	1321-3R8-B	1321-3RA8-B	1321-3R8-B	1321-3RA8-B
20BD011	Heavy Duty	5	1321-3R8-B	1321-3RA8-B	1321-3R12-B	1321-3RA12-B
20BD011	Normal Duty	7.5	1321-3R12-B	1321-3RA12-B	1321-3R12-B	1321-3RA12-B
20BD014	Heavy Duty	7.5	1321-3R12-B	1321-3RA12-B	1321-3R18-B	1321-3RA18-B
20BD014	Normal Duty	10	1321-3R18-B	1321-3RA18-B	1321-3R18-B	1321-3RA18-B
20BD022	Heavy Duty	10	1321-3R18-B	1321-3RA18-B	1321-3R25-B	1321-3RA25-B
20BD022	Normal Duty	15	1321-3R25-B	1321-3RA25-B	1321-3R25-B	1321-3RA25-B
20BD027	Heavy Duty	15	1321-3R25-B	1321-3RA25-B	1321-3R25-B	1321-3RA25-B
20BD027	Normal Duty	20	1321-3R35-B	1321-3RA35-B	1321-3R25-B	1321-3RA25-B
20BD034	Heavy Duty	20	1321-3R35-B	1321-3RA35-B	1321-3R35-B	1321-3RA35-B
20BD034	Normal Duty	25	1321-3R35-B	1321-3RA35-B	1321-3R35-B	1321-3RA35-B
20BD040	Heavy Duty	25	1321-3R35-B	1321-3RA35-B	1321-3R45-B	1321-3RA45-B
20BD040	Normal Duty	30	1321-3R45-B	1321-3RA45-B	1321-3R45-B	1321-3RA45-B
20BD052	Heavy Duty	30	1321-3R45-B	1321-3RA45-B	1321-3R55-B	1321-3RA55-B
20BD052	Normal Duty	40	1321-3R55-B	1321-3RA55-B	1321-3R55-B	1321-3RA55-B
20BD065	Heavy Duty	40	1321-3R55-B	1321-3RA55-B	1321-3R80-B	1321-3RA80-B
20BD065	Normal Duty	50	1321-3R80-B	1321-3RA80-B	1321-3R80-B	1321-3RA80-B
20BD077	Heavy Duty	50	1321-3R80-B	1321-3RA80-B	1321-3R80-B	1321-3RA80-B
20BD077	Normal Duty	60	1321-3R80-B	1321-3RA80-B	1321-3R80-B	1321-3RA80-B
20BD096	Heavy Duty	60	1321-3R80-B	1321-3RA80-B	1321-3R80-B	1321-3RA80-B
20BD096	Normal Duty	75	1321-3R100-B	1321-3RA100-B	1321-3R100-B	1321-3RA100-B
20BD125	Heavy Duty	75	1321-3R100-B	1321-3RA100-B	1321-3R100-B	1321-3RA100-B
20BD125	Normal Duty	100	1321-3R130-B	1321-3RA130-B	1321-3R130-B	1321-3RA130-B
20BD156	Heavy Duty	100	1321-3R130-B	1321-3RA130-B	1321-3R130-B	1321-3RA130-B
20BD156	Normal Duty	125	1321-3R160-B	1321-3RA160-B	1321-3R160-B	1321-3RA160-B
20BD180	Heavy Duty	125	1321-3R160-B	1321-3RA160-B	1321-3R160-B	1321-3RA160-B
20BD180	Normal Duty	150	1321-3R200-B	1321-3RA200-B	1321-3R200-C	1321-3RA200-C

continued

			Input Line Reactor(1)		Output Line Reactor(1)	
			IP00 (Open Style)	IP11 (NEMA/UL Type 1)	IP00 (Open Style)	IP11 (NEMA/UL Type 1)
Drive Cat. No.	Duty	Hp	Cat. No.	Cat. No.	Cat. No.	Cat. No.
20BD248	Heavy Duty	150	1321-3R200-B	1321-3RA200-B	1321-3R200-C	1321-3RA200-C
20BD248	Normal Duty	200	1321-3RB250-B	1321-3RAB250-B	1321-3RB250-B	1321-3RAB250-B
20BD292	Heavy Duty	200	1321-3RB250-B	1321-3RAB250-B	1321-3RB250-B	1321-3RAB250-B
20BD292	Normal Duty	250	1321-3RB320-B	1321-3RAB320-B	1321-3RB320-B	1321-3RAB320-B
20BD325	Heavy Duty	250	1321-3RB320-B	1321-3RAB320-B	1321-3RB320-B	1321-3RAB320-B
20BD325	Normal Duty	250	1321-3RB320-B	1321-3RAB320-B	1321-3RB320-B	1321-3RAB320-B
20BD365	Heavy Duty	250	1321-3RB320-B	1321-3RAB320-B	1321-3RB320-B	1321-3RAB320-B
20BD365	Normal Duty	300	1321-3RB400-B	1321-3RAB400-B	1321-3RB400-B	1321-3RAB400-B
20BD415	Heavy Duty	300	1321-3RB400-B	1321-3RAB400-B	1321-3RB400-B	1321-3RAB400-B
20BD415	Normal Duty	350	1321-3RB400-B	1321-3RAB400-B	1321-3RB400-B	1321-3RAB400-B
20BD481	Heavy Duty	350	1321-3RB400-B	1321-3RAB400-B	1321-3RB400-B	1321-3RAB400-B
20BD481	Normal Duty	400	1321-3R500-B	1321-3RA500-B	1321-3R500-B	1321-3RA500-B
20BD535	Heavy Duty	400	1321-3R500-B	1321-3RA500-B	1321-3R500-B	1321-3RA500-B
20BD535	Normal Duty	450	1321-3R500-B	1321-3RA500-B	1321-3R500-B	1321-3RA500-B
20BD600	Heavy Duty	450	1321-3R500-B	1321-3RA500-B	1321-3R500-B	1321-3RA500-B
20BD600	Normal Duty	500	1321-3R600-B	1321-3RA600-B	1321-3R600-B	1321-3RA600-B
20BD730	Heavy Duty	500	1321-3R600-B	1321-3RA600-B	1321-3R600-B	1321-3RA600-B
20BD730	Normal Duty	600	1321-3R750-B	1321-3RA750-B	1321-3R750-B	1321-3RA750-B
20BD875	Heavy Duty	600	1321-3R750-B	1321-3RA750-B	1321-3R600-B	1321-3RA600-B
20BD875	Normal Duty	700	1321-3R850-B	1321-3RA850-B	1321-3R850-B	1321-3RA850-B

(1) Input line reactors were sized based on the NEC fundamental motor amps. Output line reactors were sized based on the VFD rated output currents.

480V, 60 Hz, Three-Phase, 5% Impedance

			Input Line Reactor[1]		Output Line Reactor[1]	
			IP00 (Open Style)	IP11 (NEMA/UL Type 1)	IP00 (Open Style)	IP11 (NEMA/UL Type 1)
Drive Cat. No.	Duty	Hp	Cat. No.	Cat. No.	Cat. No.	Cat. No.
20BD1P1	Heavy Duty	0.33	1321-3R1-B	1321-3RA1-B	1321-3R2-C	1321-3RA2-C
20BD1P1	Normal Duty	0.5	1321-3R1-B	1321-3RA1-B	1321-3R2-C	1321-3RA2-C
20BD2P1	Heavy Duty	0.75	1321-3R2-C	1321-3RA2-C	1321-3R2-B	1321-3RA2-B
20BD2P1	Normal Duty	1	1321-3R2-B	1321-3RA2-B	1321-3R2-B	1321-3RA2-B
20BD3P4	Heavy Duty	1.5	1321-3R4-D	1321-3RA4-D	1321-3R4-D	1321-3RA4-D
20BD3P4	Normal Duty	2	1321-3R4-D	1321-3RA4-D	1321-3R4-D	1321-3RA4-D
20BD5P0	Heavy Duty	2	1321-3R4-D	1321-3RA4-D	1321-3R8-D	1321-3RA8-D
20BD5P0	Normal Duty	3	1321-3R8-D	1321-3RA8-D	1321-3R8-D	1321-3RA8-D
20BD8P0	Heavy Duty	3	1321-3R8-D	1321-3RA8-D	1321-3R8-C	1321-3RA8-C
20BD8P0	Normal Duty	5	1321-3R8-C	1321-3RA8-C	1321-3R8-C	1321-3RA8-C
20BD011	Heavy Duty	5	1321-3R8-C	1321-3RA8-C	1321-3R12-C	1321-3RA12-C
20BD011	Normal Duty	7.5	1321-3R12-C	1321-3RA12-C	1321-3R12-C	1321-3RA12-C
20BD014	Heavy Duty	7.5	1321-3R12-C	1321-3RA12-C	1321-3R18-C	1321-3RA18-C
20BD014	Normal Duty	10	1321-3R18-C	1321-3RA18-C	1321-3R18-C	1321-3RA18-C
20BD022	Heavy Duty	10	1321-3R18-C	1321-3RA18-C	1321-3R25-C	1321-3RA25-C
20BD022	Normal Duty	15	1321-3R25-C	1321-3RA25-C	1321-3R25-C	1321-3RA25-C
20BD027	Heavy Duty	15	1321-3R25-C	1321-3RA25-C	1321-3R25-C	1321-3RA25-C
20BD027	Normal Duty	20	1321-3R35-C[2]	1321-3RA35-C[2]	1321-3R25-C	1321-3RA25-C
20BD034	Heavy Duty	20	1321-3R35-C[2]	1321-3RA35-C[2]	1321-3R35-C	1321-3RA35-C
20BD034	Normal Duty	25	1321-3R35-C	1321-3RA35-C	1321-3R35-C	1321-3RA35-C
20BD040	Heavy Duty	25	1321-3R35-C	1321-3RA35-C	1321-3R45-C	1321-3RA45-C
20BD040	Normal Duty	30	1321-3R45-C	1321-3RA45-C	1321-3R45-C	1321-3RA45-C
20BD052	Heavy Duty	30	1321-3R45-C	1321-3RA45-C	1321-3R55-C	1321-3RA55-C
20BD052	Normal Duty	40	1321-3R55-C	1321-3RA55-C	1321-3R55-C	1321-3RA55-C
20BD065	Heavy Duty	40	1321-3R55-C	1321-3RA55-C	1321-3R80-C	1321-3RA80-C
20BD065	Normal Duty	50	1321-3R80-C	1321-3RA80-C	1321-3R80-C	1321-3RA80-C
20BD077	Heavy Duty	50	1321-3R80-C	1321-3RA80-C	1321-3R80-C	1321-3RA80-C
20BD077	Normal Duty	60	1321-3R80-C	1321-3RA80-C	1321-3R80-C	1321-3RA80-C
20BD096	Heavy Duty	60	1321-3R80-C	1321-3RA80-C	1321-3R80-C	1321-3RA80-C
20BD096	Normal Duty	75	1321-3R100-C	1321-3RA100-C	1321-3R100-C	1321-3RA100-C
20BD125	Heavy Duty	75	1321-3R100-C	1321-3RA100-C	1321-3R100-C	1321-3RA100-C
20BD125	Normal Duty	100	1321-3R130-C	1321-3RA130-C	1321-3R130-C	1321-3RA130-C
20BD156	Heavy Duty	100	1321-3R130-C	1321-3RA130-C	1321-3R130-C	1321-3RA130-C
20BD156	Normal Duty	125	1321-3R160-C	1321-3RA160-C	1321-3R160-C	1321-3RA160-C
20BD180	Heavy Duty	125	1321-3R160-C	1321-3RA160-C	1321-3R160-C	1321-3RA160-C
20BD180	Normal Duty	150	1321-3R200-C	1321-3RA200-C	1321-3R200-C[2]	1321-3RA200-C[2]

continued

			Input Line Reactor[1]		Output Line Reactor[1]	
			IP00 (Open Style)	IP11 (NEMA/UL Type 1)	IP00 (Open Style)	IP11 (NEMA/UL Type 1)
Drive Cat. No.	Duty	Hp	Cat. No.	Cat. No.	Cat. No.	Cat. No.
20BD248	Heavy Duty	150	1321-3R200-C	1321-3RA200-C	1321-3R200-C[2]	1321-3RA200-C[2]
20BD248	Normal Duty	200	1321-3RB250-C	1321-3RAB250-C	1321-3RB250-C	1321-3RAB250-C
20BD292	Heavy Duty	200	1321-3RB250-C	1321-3RAB250-C	1321-3RB250-C	1321-3RAB250-C
20BD292	Normal Duty	250	1321-3RB320-C	1321-3RAB320-C	1321-3RB320-C	1321-3RAB320-C
20BD325	Heavy Duty	250	1321-3RB320-C	1321-3RAB320-C	1321-3RB320-C	1321-3RAB320-C
20BD325	Normal Duty	250	1321-3RB320-C	1321-3RAB320-C	1321-3RB320-C	1321-3RAB320-C
20BD365	Heavy Duty	250	1321-3RB320-C	1321-3RAB320-C	1321-3RB320-C	1321-3RAB320-C
20BD365	Normal Duty	300	1321-3RB400-C	1321-3RAB400-C	1321-3RB400-C	1321-3RAB400-C
20BD415	Heavy Duty	300	1321-3RB400-C	1321-3RAB400-C	1321-3RB400-C	1321-3RAB400-C
20BD415	Normal Duty	350	1321-3R500-C	1321-3RA500-C	1321-3RB400-C	1321-3RAB400-C
20BD481	Heavy Duty	350	1321-3R500-C	1321-3RA500-C	1321-3RB400-C	1321-3RAB400-C
20BD481	Normal Duty	400	1321-3R500-C	1321-3RA500-C	1321-3R500-C	1321-3RA500-C
20BD535	Heavy Duty	400	1321-3R500-C	1321-3RA500-C	1321-3R500-C	1321-3RA500-C
20BD535	Normal Duty	450	1321-3R600-C	1321-3RA600-C	1321-3R500-C	1321-3RA500-C
20BD600	Heavy Duty	450	1321-3R600-C	1321-3RA600-C	1321-3R500-C	1321-3RA500-C
20BD600	Normal Duty	500	1321-3R600-C	1321-3RA600-C	1321-3R600-C	1321-3RA600-C
20BD730	Heavy Duty	500	1321-3R600-C	1321-3RA600-C	1321-3R600-C	1321-3RA600-C
20BD730	Normal Duty	600	1321-3R750-E	1321-3RA750-E	1321-3R750-E	1321-3RA750-E
20BD875	Heavy Duty	600	1321-3R750-E	1321-3RA750-E	1321-3R750-E	1321-3RA750-E
20BD875	Normal Duty	700	1321-3R850-C	1321-3RA850-C	1321-3R850-C	1321-3RA850-C

(1) Input line reactors were sized based on the NEC fundamental motor amps. Output line reactors were sized based on the VFD rated output currents.

(2) 4% impedance.

600V, 60 Hz, Three-Phase, 3% Impedance

			Input Line Reactor(1)		Output Line Reactor(1)	
			IP00 (Open Style)	IP11 (NEMA/UL Type 1)	IP00 (Open Style)	IP11 (NEMA/UL Type 1)
Drive Cat. No.	Duty	Hp	Cat. No.	Cat. No.	Cat. No.	Cat. No.
20BE1P7	Heavy Duty	0.5	1321-3R1-C	1321-3RA1-C	1321-3R2-B	1321-3RA2-B
20BE1P7	Normal Duty	1	1321-3R2-B	1321-3RA2-B	1321-3R2-B	1321-3RA2-B
20BE2P7	Heavy Duty	1	1321-3R2-B	1321-3RA2-B	1321-3R4-D	1321-3RA4-D
20BE2P7	Normal Duty	2	1321-3R4-D	1321-3RA4-D	1321-3R4-D	1321-3RA4-D
20BE3P9	Heavy Duty	2	1321-3R4-D	1321-3RA4-D	1321-3R4-C	1321-3RA4-C
20BE3P9	Normal Duty	3	1321-3R4-C	1321-3RA4-C	1321-3R4-C	1321-3RA4-C
20BE6P1	Heavy Duty	3	1321-3R4-C	1321-3RA4-C	1321-3R8-C	1321-3RA8-C
20BE6P1	Normal Duty	5	1321-3R8-C	1321-3RA8-C	1321-3R8-C	1321-3RA8-C
20BE9P0	Heavy Duty	5	1321-3R8-C	1321-3RA8-C	1321-3R12-C	1321-3RA12-C
20BE9P0	Normal Duty	7.5	1321-3R12-C	1321-3RA12-C	1321-3R12-C	1321-3RA12-C
20BE011	Heavy Duty	7.5	1321-3R12-C	1321-3RA12-C	1321-3R12-B	1321-3RA12-B
20BE011	Normal Duty	10	1321-3R12-B	1321-3RA12-B	1321-3R12-B	1321-3RA12-B
20BE017	Heavy Duty	10	1321-3R12-B	1321-3RA12-B	1321-3R18-B	1321-3RA18-B
20BE017	Normal Duty	15	1321-3R18-B	1321-3RA18-B	1321-3R18-B	1321-3RA18-B
20BE022	Heavy Duty	15	1321-3R18-B	1321-3RA18-B	1321-3R25-B	1321-3RA25-B
20BE022	Normal Duty	20	1321-3R25-B	1321-3RA25-B	1321-3R25-B	1321-3RA25-B
20BE027	Heavy Duty	20	1321-3R25-B	1321-3RA25-B	1321-3R35-C	1321-3RA35-C
20BE027	Normal Duty	25	1321-3R35-C	1321-3RA35-C	1321-3R35-C	1321-3RA35-C
20BE032	Heavy Duty	25	1321-3R35-C	1321-3RA35-C	1321-3R35-B	1321-3RA35-B
20BE032	Normal Duty	30	1321-3R35-B	1321-3RA35-B	1321-3R35-B	1321-3RA35-B
20BE041	Heavy Duty	30	1321-3R35-B	1321-3RA35-B	1321-3R45-B	1321-3RA45-B
20BE041	Normal Duty	40	1321-3R45-B	1321-3RA45-B	1321-3R45-B	1321-3RA45-B
20BE052	Heavy Duty	40	1321-3R45-B	1321-3RA45-B	1321-3R55-B	1321-3RA55-B
20BE052	Normal Duty	50	1321-3R55-B	1321-3RA55-B	1321-3R55-B	1321-3RA55-B
20BE062	Heavy Duty	50	1321-3R55-B	1321-3RA55-B	1321-3R80-B	1321-3RA80-B
20BE062	Normal Duty	60	1321-3R80-B	1321-3RA80-B	1321-3R80-B	1321-3RA80-B
20BE077	Heavy Duty	60	1321-3R80-B	1321-3RA80-B	1321-3R80-B	1321-3RA80-B
20BE077	Normal Duty	75	1321-3R80-B	1321-3RA80-B	1321-3R80-B	1321-3RA80-B
20BE099	Heavy Duty	75	1321-3R80-B	1321-3RA80-B	1321-3R80-B	1321-3RA80-B
20BE099	Normal Duty	100	1321-3R100-B	1321-3RA100-B	1321-3R100-B	1321-3RA100-B
20BE125	Heavy Duty	100	1321-3R100-B	1321-3RA100-B	1321-3R100-B	1321-3RA100-B
20BE125	Normal Duty	125	1321-3R130-B	1321-3RA130-B	1321-3R130-B	1321-3RA130-B
20BE144	Heavy Duty	125	1321-3R130-B	1321-3RA130-B	1321-3R130-B	1321-3RA130-B
20BE144	Normal Duty	150	1321-3R160-B	1321-3RA160-B	1321-3R160-B	1321-3RA160-B

(1) Input line reactors were sized based on the NEC fundamental motor amps. Output line reactors were sized based on the VFD rated output currents.

600V, 60 Hz, Three-Phase, 5% Impedance

			Input Line Reactor[1]		Output Line Reactor[1]	
			IP00 (Open Style)	IP11 (NEMA/UL Type 1)	IP00 (Open Style)	IP11 (NEMA/UL Type 1)
Drive Cat. No.	Duty	Hp	Cat. No.	Cat. No.	Cat. No.	Cat. No.
20BE1P7	Heavy Duty	0.5	1321-3R1-B	1321-3RA1-B	1321-3R2-C	1321-3RA2-C
20BE1P7	Normal Duty	1	1321-3R2-C	1321-3RA2-C	1321-3R2-C	1321-3RA2-C
20BE2P7	Heavy Duty	1	1321-3R2-C	1321-3RA2-C	1321-3R4-D[2]	1321-3RA4-D[2]
20BE2P7	Normal Duty	2	1321-3R4-D[2]	1321-3RA4-D[2]	1321-3R4-D[2]	1321-3RA4-D[2]
20BE3P9	Heavy Duty	2	1321-3R4-D[2]	1321-3RA4-D[2]	1321-3R4-D	1321-3RA4-D
20BE3P9	Normal Duty	3	1321-3R4-D	1321-3RA4-D	1321-3R4-D	1321-3RA4-D
20BE6P1	Heavy Duty	3	1321-3R4-D	1321-3RA4-D	1321-3R8-D	1321-3RA8-D
20BE6P1	Normal Duty	5	1321-3R8-D	1321-3RA8-D	1321-3R8-D	1321-3RA8-D
20BE9P0	Heavy Duty	5	1321-3R8-D	1321-3RA8-D	1321-3R12-C[2]	1321-3RA12-C[2]
20BE9P0	Normal Duty	7.5	1321-3R12-C[2]	1321-3RA12-C[2]	1321-3R12-C[2]	1321-3RA12-C[2]
20BE011	Heavy Duty	7.5	1321-3R12-C[2]	1321-3RA12-C[2]	1321-3R12-C	1321-3RA12-C
20BE011	Normal Duty	10	1321-3R12-C	1321-3RA12-C	1321-3R12-C	1321-3RA12-C
20BE017	Heavy Duty	10	1321-3R12-C	1321-3RA12-C	1321-3R18-C	1321-3RA18-C
20BE017	Normal Duty	15	1321-3R18-C	1321-3RA18-C	1321-3R18-C	1321-3RA18-C
20BE022	Heavy Duty	15	1321-3R18-C	1321-3RA18-C	1321-3R25-C[2]	1321-3RA25-C[2]
20BE022	Normal Duty	20	1321-3R25-C[2]	1321-3RA25-C[2]	1321-3R25-C[2]	1321-3RA25-C[2]
20BE027	Heavy Duty	20	1321-3R25-C[2]	1321-3RA25-C[2]	1321-3R35-C[2]	1321-3RA35-C[2]
20BE027	Normal Duty	25	1321-3R35-C[2]	1321-3RA35-C[2]	1321-3R35-C[2]	1321-3RA35-C[2]
20BE032	Heavy Duty	25	1321-3R35-C[2]	1321-3RA35-C[2]	1321-3R35-C[2]	1321-3RA35-C[2]
20BE032	Normal Duty	30	1321-3R35-C[2]	1321-3RA35-C[2]	1321-3R35-C[2]	1321-3RA35-C[2]
20BE041	Heavy Duty	30	1321-3R35-C[2]	1321-3RA35-C[2]	1321-3R45-C	1321-3RA45-C
20BE041	Normal Duty	40	1321-3R45-C	1321-3RA45-C	1321-3R45-C	1321-3RA45-C
20BE052	Heavy Duty	40	1321-3R45-C	1321-3RA45-C	1321-3R55-C	1321-3RA55-C
20BE052	Normal Duty	50	1321-3R55-C	1321-3RA55-C	1321-3R55-C	1321-3RA55-C
20BE062	Heavy Duty	50	1321-3R55-C	1321-3RA55-C	1321-3R80-C	1321-3RA80-C
20BE062	Normal Duty	60	1321-3R80-C	1321-3RA80-C	1321-3R80-C	1321-3RA80-C
20BE077	Heavy Duty	60	1321-3R80-C	1321-3RA80-C	1321-3R80-C	1321-3RA80-C
20BE077	Normal Duty	75	1321-3R80-C	1321-3RA80-C	1321-3R80-C	1321-3RA80-C
20BE099	Heavy Duty	75	1321-3R80-C	1321-3RA80-C	1321-3R80-C	1321-3RA80-C
20BE099	Normal Duty	100	1321-3R100-C	1321-3RA100-C	1321-3R100-C	1321-3RA100-C
20BE125	Heavy Duty	100	1321-3R100-C	1321-3RA100-C	1321-3R100-C	1321-3RA100-C
20BE125	Normal Duty	125	1321-3R130-C[2]	1321-3RA130-C[2]	1321-3R130-C[2]	1321-3RA130-C[2]
20BE144	Heavy Duty	125	1321-3R130-C[2]	1321-3RA130-C[2]	1321-3R130-C[2]	1321-3RA130-C[2]
20BE144	Normal Duty	150	1321-3R160-C[2]	1321-3RA160-C[2]	1321-3R160-C[2]	1321-3RA160-C[2]

(1) Input line reactors were sized based on the NEC fundamental motor amps. Output line reactors were sized based on the VFD rated output currents.

(2) 4% impedance.

Important User Information

Read this document and the documents listed in the additional resources section about installation, configuration, and operation of this equipment before you install, configure, operate, or maintain this product. Users are required to familiarize themselves with installation and wiring instructions in addition to requirements of all applicable codes, laws, and standards.

Activities including installation, adjustments, putting into service, use, assembly, disassembly, and maintenance are required to be carried out by suitably trained personnel in accordance with applicable code of practice.

If this equipment is used in a manner not specified by the manufacturer, the protection provided by the equipment may be impaired.

In no event will Rockwell Automation, Inc. be responsible or liable for indirect or consequential damages resulting from the use or application of this equipment.

The examples and diagrams in this manual are included solely for illustrative purposes. Because of the many variables and requirements associated with any particular installation, Rockwell Automation, Inc. cannot assume responsibility or liability for actual use based on the examples and diagrams.

No patent liability is assumed by Rockwell Automation, Inc. with respect to use of information, circuits, equipment, or software described in this manual.

Reproduction of the contents of this manual, in whole or in part, without written permission of Rockwell Automation, Inc., is prohibited.

Documentation Feedback

Your comments will help us serve your documentation needs better. If you have any suggestions on how to improve this document, complete this form, publication RA-DU002, available at http://www.rockwellautomation.com/literature/.

Allen-Bradley, Rockwell Software, Rockwell Automation, and LISTEN. THINK. SOLVE are trademarks of Rockwell Automation, Inc.
Trademarks not belonging to Rockwell Automation are property of their respective companies.

Rockwell Otomasyon Ticaret A.Ş., Kar Plaza İş Merkezi E Blok Kat:6 34752 İçerenköy, İstanbul, Tel: +90 (216) 5698400

www.rockwellautomation.com

Power, Control and Information Solutions Headquarters

Americas: Rockwell Automation, 1201 South Second Street, Milwaukee, WI 53204-2496 USA, Tel: (1) 414.382.2000, Fax: (1) 414.382.4444
Europe/Middle East/Africa: Rockwell Automation NV, Pegasus Park, De Kleetlaan 12a, 1831 Diegem, Belgium, Tel: (32) 2 663 0600, Fax: (32) 2 663 0640
Asia Pacific: Rockwell Automation, Level 14, Core F, Cyberport 3, 100 Cyberport Road, Hong Kong, Tel: (852) 2887 4788, Fax: (852) 2508 1846

Publication 20B-TD001H-EN-P - July 2014
Supersedes Publication 20B-TD001G-EN-P - July 2013

Copyright © 2014 Rockwell Automation, Inc. All rights reserved. Printed in the U.S.A.

Technical Data

Allen-Bradley

1321 Power Conditioning Products

Don't Ignore the Cost of Power Line Disturbance

Topic	Page
Product Overview	2
1321-3R and 3RA Series Line Reactors	3
1321 Reflective Wave Reduction (RWR) Devices	12
1321-3TH/3TW Series Three-Phase Isolation Transformers	16
1321-M Common Mode Chokes	21
1321-DC DC Link Chokes	24

LISTEN.
THINK.
SOLVE.®

Allen-Bradley • Rockwell Software

Rockwell Automation

Additional Resources

These documents contain additional information concerning related products from Rockwell Automation.

Resource	Description
Wiring and Grounding Guidelines for Pulse Width Modulated (PWM) AC Drives, publication DRIVES-IN001	Provides basic information needed to properly wire and ground PWM AC drives.
Safety Guidelines for the Application, Installation and Maintenance of Solid State Control, publication SGI-1.1	Provides general guidelines for the application, installation, and maintenance of solid-state control.

You can view or download publications at http://www.rockwellautomation.com/literature/. To order paper copies of technical documentation, contact your local Allen-Bradley distributor or Rockwell Automation sales representative.

For Allen-Bradley Drives Technical Support:

Title	Online at…
Allen-Bradley Drives Technical Support	www.ab.com/support/abdrives or call (1) 262.512.8176

Product Overview

Allen-Bradley reactors help keep equipment running longer by absorbing many of the power line disturbances which can shut down your drive. Allen-Bradley isolation transformers can provide both voltage change and isolation for your variable speed drive. These designs are harmonic compensated and IGBT protected to assure optimum performance in the presence of harmonics.

1321-3R and 3RA Series Line Reactors

Applying Allen-Bradley Line Reactors

At the Input of the Drive

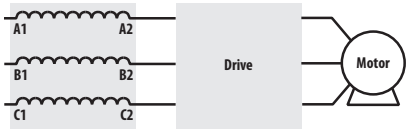

At the input of a drive, line reactors help protect against surges or spikes on the incoming power lines and help reduce harmonic distortion.

- Eliminate Nuisance Tripping
- Extend Semiconductor Life
- Reduce Harmonic Distortion
- Improve True Power Factor
- Reduce Voltage Notching
- Meet IEEE-519 or EN-61800

At the Output of the Drive

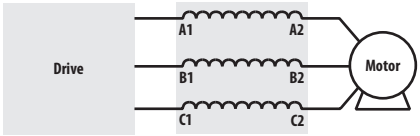

In long motor lead applications, Allen-Bradley load reactors located between the drive and motor help reduce dv/dt and motor terminal peak voltages. The use of a load reactor also helps protect the drive from surge currents caused by rapid changes in the load.

- Protect Motors from Long Lead Effects
- Reduce Output Voltage dv/dt
- Extend Semiconductor Life
- Reduce Surge Currents
- Reduce Motor Temperature
- Reduce Audible Motor Noise

With Multiple Drives

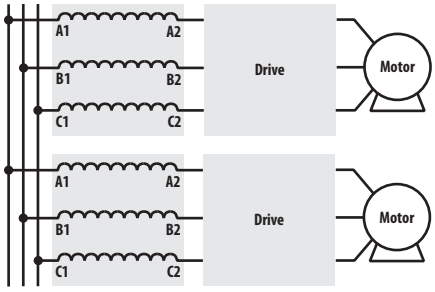

Multiple drives on a common power line should each have their own line reactor. Individual line reactors provide filtering between each drive to help reduce any crosstalk while providing optimum surge protection for each drive.

With Multiple Motors

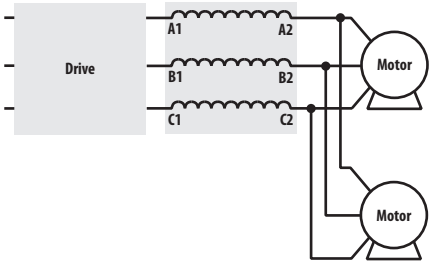

When more than one motor is controlled by a single drive, a single line reactor can typically be used between the drive and all the motors. Size the line reactor based on the total motor/load horsepower.

With Single-Phase Input

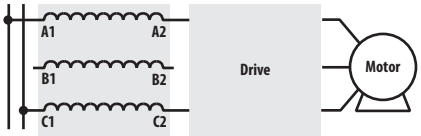

A three-phase reactor can be used for single-phase applications by routing each of the two input power conductors to the outside two coils, and leaving the center coil disconnected. The sum of the inductance of the two coils is the total inductance applied to the circuit. Contact Rockwell Automation Technical Support for assistance in specifying the proper reactor.

Selecting the Correct Impedance Rating

Why is the Right Impedance Rating Important?

Selecting the correct impedance rating is critical for your job. An impedance value too low may not limit peak current. Too high of an impedance may reduce input voltage. Allen-Bradley line reactors offer two impedance ratings.

3% Impedance Rated Reactors to Reduce Nuisance Trips

Allen-Bradley line reactors rated at 3% are typically sufficient to absorb line spikes and motor current surges and will help prevent nuisance tripping of drive and circuit breakers in most applications.

5% Impedance Rated Reactors to Reduce Harmonic Content

Allen-Bradley reactors rated at 5% are best for reducing harmonic current and frequencies. These line reactors help comply with IEEE-519 (not normally used as load reactors).

Voltage Spike Protection

Voltage spikes on AC power lines can cause elevation of the DC bus voltage which may cause the drive to trip on an overvoltage condition.

3% impedance reactors are very effective at protecting drives against voltage spikes and nuisance tripping. Allen-Bradley line reactors absorb these line spikes protecting the drive from nuisance tripping and damage.

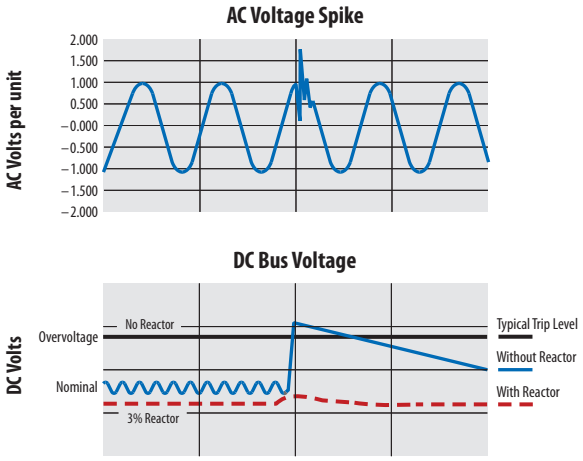

Motor Protection

Allen-Bradley load reactors can help protect motors from high peak voltages.

For IGBT drive applications with long drive-to-motor lead lengths, Allen-Bradley load reactors can help protect against fast dv/dt rise times.

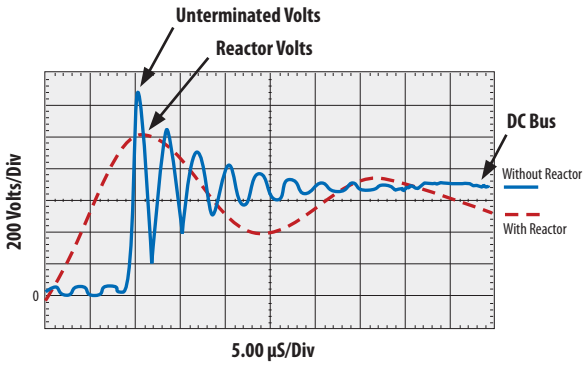

Catalog Number Explanation

Position Number	1-4		6	7	8		10
	1321	–	3	R	4	–	B
	a		b	c	d		e

a

Product	
Code	**Type**
1321	1321 Power Component

b

Phases	
Code	**Description**
3	Three-Phase

c

Device	
Code	**Description**
R	Reactor, Open
RA, RB	Reactor, NEMA 1
RAB	Reactor, NEMA 1, Cabinet Style 2 Only

d

Fundamental Amps	
Code	**Amps**
1	1
2	2
4	4
8	8
12	12
18	18
25	25
35	35
45	45
55	55
80	80
100	100
130	130
160	160
200	200
250	250
320	320
400	400
500	500
600	600
750	750
850	850
1000	1000

e

Inductance Rating	
Code	**Description**
A	Each reactor current rating has four inductance ratings also available. See the IP00 dimension table.
B	
C	
D	

Common Specifications

Specification		Rating
Material	Enclosures	IP11 (NEMA/UL Type 1) — Sheet steel in accordance with UL, NEMA requirements
		IP00 (Open) or IP20 (Open - with finger safe terminals)
	Terminations	1-45 Amp (fundamental) Ratings – Finger guard IP20 terminal block
		80-160 Amp (fundamental) Ratings – Solid copper box lugs
		200-400 Amp (fundamental) Ratings – Copper tab terminals
		401 Amps and Above – Copper tab terminals
Harmonic Compensation	All line reactors are compensated for the additional currents and high frequencies caused by the presence of harmonics	
General Protection	Impedance	3% or 5% based on the fundamental current ratings
	Overload Rating	200% of fundamental current for 30 minutes 300% of fundamental current for 1 minute
	dv/dt Protection	Meets NEMA MG-1, part 31
Electrical	Max. Rated Voltage	600V AC (units with terminal blocks) 690V AC (units with box lugs or tab terminals)
	Max. Switching Freq.	20 kHz
	Fundamental Frequency	Line/Load - 50/60 Hz
	Temperature Rise	135 degrees C average
	Dielectric Strength	3,000 Volts rms (4,243 volts peak)
	Inductance Curve (Typical)	100% at 100% current 100% at 150% current 50% at 350% current (minimum)
	Inductance Tolerance	±10%
	Insulation System	Class N (200 degrees C)
	Impregnation	High bond strength solventless epoxy, 200 degrees C, UL94HB recognized
Environmental	Ambient Temperature	45 degrees C (maximum)
	Altitude	1000 meters (3280 feet)
Agency Approvals	UL-508	File E180243 Component Listed (1-2400 amps) File E180243 UL Listed NEMA Type 1 units (1-2400 amps) Note: Short Circuit rating not required under Exception No.1 of UL508A SB4.2.1 effective 4/25/06
	CSA C22.2, Class N, 200 °C	File LR29753-13 CSA Certified (1 amp - 2400 amps) File E66214, Type 200-18, UL Recognized Insulation System
	CE	TUV certified to EN61558-2-20:2000

Termination

Allen-Bradley reactors rated 45 Amps (fundamental) and below are supplied with an integral mounted terminal block. Reactors rated from 55 to 160 Amps (fundamental) are supplied with box lugs. Reactors rated 200 to 400 Amps (fundamental) will be supplied with front facing copper tabs. Above 400 Amps (fundamental), side facing copper tabs are used. The “3R” and “3RA” designations for the 1321 line reactors indicate the following: 3R = Open Enclosure Line Reactor and 3RA = NEMA 1 Enclosure Line Reactor.

Typical Termination Types and Specifications

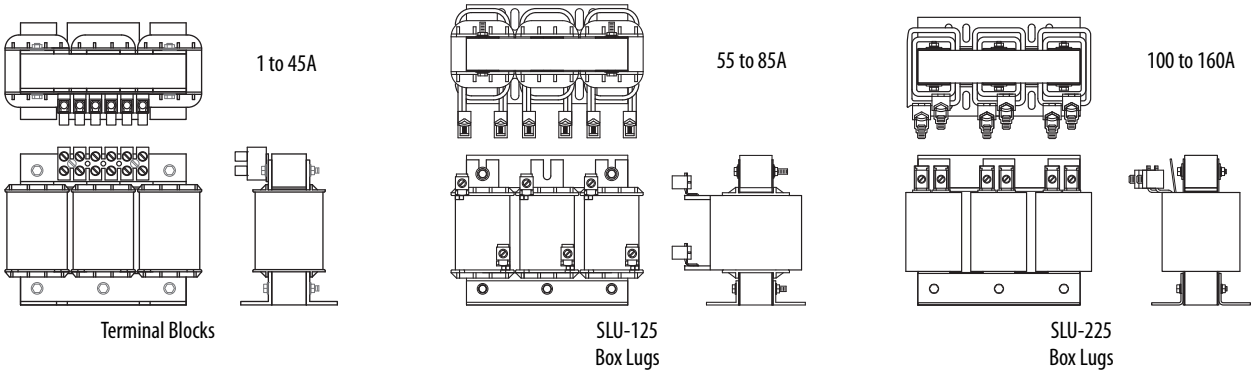

Reactor Catalog Number		Termination	Max./Min. Wire Size	Max. Torque
IP00 (Open) or IP20	IP11 (NEMA/UL Type 1)	Type	mm^2 (AWG)	Nm (lb.-in.)
1321-3R1-A to 1321-3R8-D	1321-3RA1-A to 1321-3RA8-D	20A Terminal Block	2.1/0.3 (14/22)	0.51 (4.5)
1321-3R12-A to 1321-3R35-B	1321-3RA12-A to 1321-3RA35-B	65A Terminal Block	16.0/0.3 (5/22)	1.81 (16)
1321-3R35-C to 1321-3R45-C	1321-3RA35-C to 1321-3RA45-C	85A Terminal Block	21.2/0.8 (4/18)	2.26 (20)
1321-3R55-A to 1321-3R80-C	1321-3RA55-A to 1321-3RA80-C	SLU-125 Box Lug	50.0/10.0 (0/6)	5.09 (45)
1321-3R100-A to 1321-3R160-C	1321-3RA100-A to 1321-3RA160-C	SLU-225 Box Lug	120.0-27.0 (0000/2)	16.95 (150)

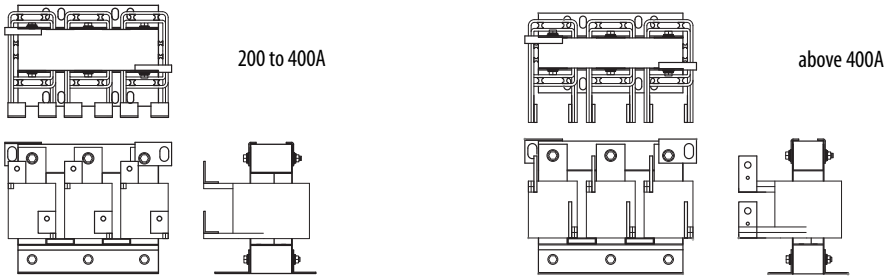

Reactor Catalog Number		Termination	Contact Surface (H x W)	Hole Diameter	Thickness
IP00 (Open) or IP20	IP11 (NEMA/UL Type 1)	Type	mm (in.)	mm (in.)	mm (in.)
1321-3R200-A to 1321-3R200-C	1321-3RA200-A to 1321-3RA200-C	Front Facing Copper Tab	41.3 x 25.4 (1.63 x 1.0)	10.36 (0.408)	3.18 (0.125)
1321-3R250-B to 1321-3RB250-C	1321-3RAB250-A to 1321-3RAB250-C	Front Facing Copper Tab	57.2 x 19.1 (2.25 x 0.75)	10.31 (0.406)	4.75 (0.187)
1321-3RB320-A to 1321-3R400-A	1321-3RAB320-A to 1321-3RA400-A	Front Facing Copper Tab	44.5 x 38.1 (1.75 x 1.5)	10.31 (0.406)	3.18 (0.125)
1321-3R500-A	1321-3RA500-A	Side Facing Copper Tab	44.5 x 38.1 (1.75 x 1.5)	10.31 (0.406)	3.18 (0.125)
1321-3R500-B to 1321-3R500-C	–	Front Facing Copper Tab	76.2 x 38.1 (3.00 x 1.5)	13.49 & 6.35 (0.531 & 0.25)	6.35 (0.25)
–	1321-3RA500-B	Side Facing Copper Tab	44.5 x 38.1 (1.75 x 1.5)	10.31 (0.406)	3.18 (0.125)

Mounting Dimensions and Weights

IMPORTANT The dimensions and weights provided on the following pages are for estimating purposes only. Conduit entry locations for floor mounted enclosures are the responsibility of the installer. Contact your Allen-Bradley Sales Office if certified drawings are required for planning and installation.

IP11 (NEMA/UL Type 1)

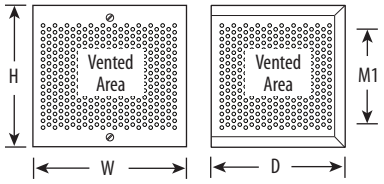

Cabinet 1 – Wall Mounted

Catalog Number 1321- …	Unit	Dimensions in mm (in.) and Weights in kg (lbs.)				
		H	W	D	M1	Weight (Cabinet Only)
3RA1-A to 3RA18-B	Cabinet 1	203 (8.0)	203 (8.0)	152 (6.0)	140 (5.5)	3.2 (7)

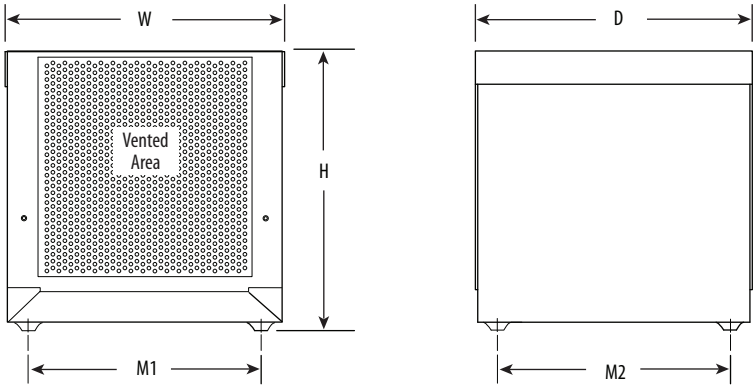

Cabinet 2 – Floor Mounted

Catalog Number 1321- …	Unit	Dimensions in mm (in.) and Weights in kg (lbs.)					
		H	W	D	Feet M1	Feet M2	Weight (Cabinet Only)
3RA18-C to 3RAB250-A	Cabinet 2	330 (13.0)	336 (13.2)	332 (13.1)	279 (11.0)	279 (11.0)	8.2 (18)

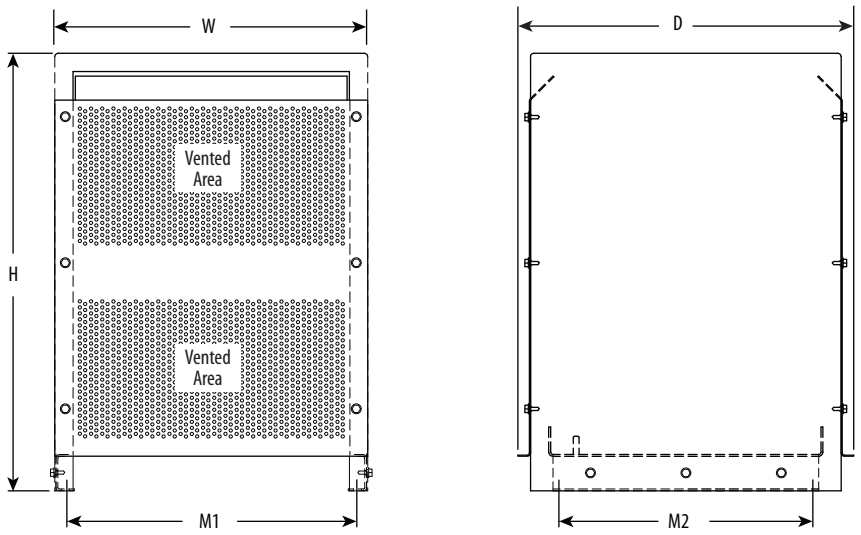

Cabinet 3 – Floor Mounted

Catalog Number 1321- …	Unit	Dimensions in mm (in.) and Weights in kg (lbs.)					
		H	W	D	Feet M1	Feet M2	Weight (Cabinet Only)
3RA250-B to 3RA500-A	Cabinet 3	610 (24.0)	429 (16.9)	467 (18.4)	406 (16.0)	343 (13.5)	12.2 (27)

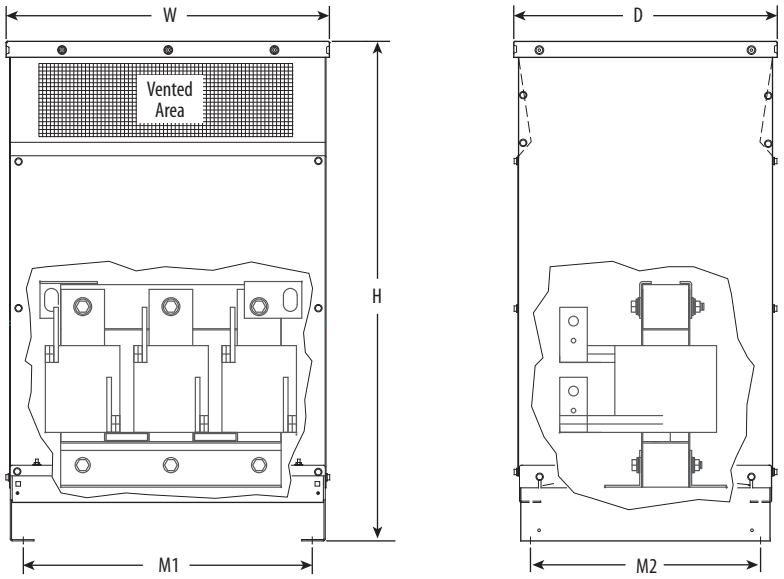

Cabinets 4 & 5 – Floor Mounted

Catalog Number 1321- …	Unit	Dimensions in mm (in.) and Weights in kg (lbs.)					
		H	W	D	Feet M1	Feet M2	Weight (1) (Cabinet Only)
3RA500-B to 3RA600-C	Cabinet 4	1194 (47.0)	674 (26.6)	633 (24.9)	592 (23.3)	552 (21.8)	72.1 (159)
3RA750-A to 3RA850-B 3RA850-C to 3RA1000-C	Cabinet 5	1194 (47.0)	776 (30.6)	633 (24.9)	694 (27.3)	552 (21.8)	72.1 (159)

(1) For total weight - add enclosure weight to specific reactor weight.

IP00/Open

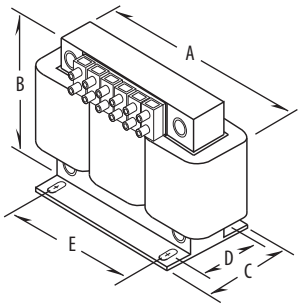

IP00 /Open, 45 Amps (fundamental) and Below

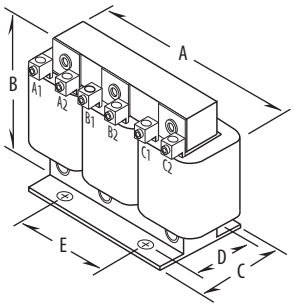

IP00/Open, 80 Amps (fundamental) and Above

Sizing Guidelines

Fundamental amps are used for sizing the reactor to be equal to or slightly higher than the total motor FLA. Sizing reactors to drive ampere ratings alone may result in mis-sizing the reactor.

Catalog Number	Fundamental Amps	Inductance - mH (Based on Fundamental Amps)	Watts Loss	Dimensions in mm (in.) and Weight in kg (lbs.)					
				A	B	C	D (1)	E	Weight
1321-3R1-A	1	100.0	14	112 (4.40)	104 (4.10)	79 (3.10)	60 (2.35)	37 (1.44)	1.8 (4)
1321-3R1-B		50.0	14.8	112 (4.40)	104 (4.10)	71 (2.80)	50 (1.98)	37 (1.44)	1.8 (4)
1321-3R1-C		36.0	12	112 (4.40)	104 (4.10)	71 (2.80)	50 (1.98)	37 (1.44)	1.4 (3)
1321-3R1-D		18.0	5	112 (4.40)	104 (4.10)	71 (2.80)	50 (1.98)	37 (1.44)	1.4 (3)
1321-3R2-A	2	12.0	7.5	112 (4.40)	104 (4.10)	71 (2.80)	50 (1.98)	37 (1.44)	1.8 (4)
1321-3R2-B		20.0	11.3	112 (4.40)	104 (4.10)	71 (2.80)	50 (1.98)	37 (1.44)	1.8 (4)
1321-3R2-C		32.0	16	112 (4.40)	104 (4.10)	71 (2.80)	50 (1.98)	37 (1.44)	1.8 (4)
1321-3R2-D		6.0	10.7	112 (4.40)	104 (4.10)	64 (2.50)	44 (1.73)	37 (1.44)	1.4 (3)
1321-3R4-A	4	3.0	14.5	112 (4.40)	104 (4.10)	71 (2.80)	50 (1.98)	37 (1.44)	1.8 (4)
1321-3R4-B		6.5	20	112 (4.40)	104 (4.10)	71 (2.80)	50 (1.98)	37 (1.44)	1.8 (4)
1321-3R4-C		9.0	20	112 (4.40)	104 (4.10)	86 (3.40)	60 (2.35)	37 (1.44)	2.3 (5)
1321-3R4-D		12.0	21	112 (4.40)	104 (4.10)	86 (3.40)	66 (2.60)	37 (1.44)	2.7 (6)
1321-3R8-A	8	1.5	19.5	152 (6.00)	121 (4.75)	76 (3.00)	53 (2.10)	51 (2.00)	3.2 (7)
1321-3R8-B		3.0	29	152 (6.00)	121 (4.75)	76 (3.00)	53 (2.10)	51 (2.00)	3.6 (8)
1321-3R8-C		5.0	25.3	152 (6.00)	121 (4.75)	86 (3.40)	67 (2.62)	51 (2.00)	5.0 (11)
1321-3R8-D		7.5	28	152 (6.00)	121 (4.75)	86 (3.40)	63 (2.48)	51 (2.00)	5.9 (13)
1321-3R12-A	12	1.25	26	152 (6.00)	127 (5.00)	84 (3.30)	53 (2.10)	51 (2.00)	4.1 (9)
1321-3R12-B		2.5	31	152 (6.00)	127 (5.00)	84 (3.30)	53 (2.10)	51 (2.00)	4.5 (10)
1321-3R12-C		4.2	41	152 (6.00)	127 (5.00)	99 (3.90)	70 (2.75)	51 (2.00)	8.2 (18)
1321-3R18-A	18	0.8	36	152 (6.00)	135 (5.30)	81 (3.20)	53 (2.10)	51 (2.00)	4.1 (9)
1321-3R18-B		1.5	43	152 (6.00)	135 (5.30)	89 (3.50)	63 (2.48)	51 (2.00)	5.5 (12)
1321-3R18-C		2.5	43	206 (8.10)	155 (6.10)	102 (4.00)	66 (2.60)	76 (3.00)	7.3 (16)
1321-3R25-A	25	0.5	48	183 (7.20)	147 (5.80)	89 (3.50)	60 (2.35)	76 (3.00)	5.0 (11)
1321-3R25-B		1.2	52	183 (7.20)	147 (5.80)	89 (3.50)	60 (2.35)	76 (3.00)	6.4 (14)
1321-3R25-C		2.0	61	183 (7.20)	147 (5.80)	109 (4.30)	79 (3.10)	76 (3.00)	9.1 (20)
1321-3R35-A	35	0.4	49	183 (7.20)	147 (5.80)	102 (4.00)	66 (2.60)	76 (3.00)	6.4 (14)
1321-3R35-B		0.8	54	183 (7.20)	147 (5.80)	102 (4.00)	70 (2.75)	76 (3.00)	7.3 (16)
1321-3R35-C		1.2	54	229 (9.00)	188 (7.40)	119 (4.70)	80 (3.16)	76 (3.00)	14.0 (30)

continued

Catalog Number	Fundamental Amps	Inductance - mH (Based on Fundamental Amps)	Watts Loss	Dimensions in mm (in.) and Weight in kg (lbs.)					
				A	B	C	D (1)	E	Weight
1321-3R45-A	45	0.3	54	229 (9.00)	188 (7.40)	119 (4.70)	80 (3.16)	76 (3.00)	10.0 (22)
1321-3R45-B		0.7	62	229 (9.00)	188 (7.40)	119 (4.70)	80 (3.16)	76 (3.00)	13.0 (28)
1321-3R45-C		1.2	65	229 (9.00)	185 (7.30)	135 (5.30)	93 (3.66)	76 (3.00)	18.0 (39)
1321-3R55-A	55	0.25	64	229 (9.00)	185 (7.30)	135 (5.30)	80 (3.16)	76 (3.00)	11.0 (24)
1321-3R55-B		0.5	67	229 (9.00)	178 (7.00)	135 (5.30)	80 (3.16)	76 (3.00)	12.0 (26)
1321-3R55-C		0.85	71	229 (9.00)	178 (7.00)	152 (6.00)	99 (3.91)	76 (3.00)	16.0 (35)
1321-3R80-A	80	0.2	82	229 (9.00)	183 (7.20)	160 (6.30)	88 (3.47)	92 (3.63)	11.3 (25)
1321-3R80-B		0.4	86	229 (9.00)	183 (7.20)	165 (6.50)	88 (3.47)	92 (3.63)	14.9 (33)
1321-3R80-C		0.7	96	274 (10.80)	216 (8.50)	173 (6.80)	106 (4.16)	92 (3.63)	28.0 (61)
1321-3R100-A	100	0.15	94	229 (9.00)	185 (7.30)	165 (6.50)	84 (3.30)	92 (3.63)	13.1 (29)
1321-3R100-B		0.3	84	229 (9.00)	185 (7.30)	173 (6.80)	93 (3.66)	92 (3.63)	16.8 (37)
1321-3R100-C		0.45	108	274 (10.80)	210 (8.30)	156 (6.20)	106 (4.16)	92 (3.63)	34.0 (74)
1321-3R130-A	130	0.1	108	229 (9.00)	178 (7.00)	118 (4.70)	80 (3.16)	76 (3.00)	13.1 (29)
1321-3R130-B		0.2	180	229 (9.00)	183 (7.20)	173 (6.80)	93 (3.66)	92 (3.63)	19.5 (43)
1321-3R130-C		0.3	128	279 (11.00)	216 (8.50)	156 (6.20)	106 (4.16)	92 (3.63)	29.0 (64)
1321-3R160-A	160	0.075	116	229 (9.00)	183 (7.20)	173 (6.80)	80 (3.16)	92 (3.63)	18.6 (41)
1321-3R160-B		0.15	149	274 (10.80)	211 (8.30)	152 (6.00)	88 (3.47)	92 (3.63)	23.0 (50)
1321-3R160-C		0.23	138	292 (11.50)	216 (8.50)	229 (9.00)	119 (4.69)	92 (3.63)	30.0 (67)
1321-3R200-A	200	0.055	124	229 (9.00)	191 (7.50)	185 (7.30)	106 (4.16)	76 (3.00)	17.2 (38)
1321-3R200-B (1)		0.110	168	229 (9.00)	191 (7.50)	211 (8.30)	112 (4.41)	76 (3.00)	24.5 (54)
1321-3R200-C (1)		0.185	146	274 (10.80)	211 (8.30)	254 (10.00)	150 (5.91)	92 (3.63)	45.4 (100)
1321-3RB250-A (1)	250	0.045	154	229 (9.00)	191 (7.50)	229 (9.00)	106 (4.19)	76 (3.00)	21.3 (47)
1321-3RB250-B (1)		0.090	231	274 (10.80)	216 (8.50)	229 (9.00)	131 (5.16)	117 (4.60)	36.3 (80)
1321-3RB250-C (1)		0.150	219	366 (14.40)	284 (11.20)	262 (10.30)	148 (5.82)	117 (4.60)	57.0 (125)
1321-3RB320-A (1)	320	0.040	224	274 (10.80)	229 (9.00)	211 (8.30)	131 (5.16)	117 (4.60)	36.3 (80)
1321-3RB320-B (1)		0.075	264	274 (10.80)	229 (9.00)	254 (10.00)	149 (5.88)	117 (4.60)	46.3 (102)
1321-3RB320-C (1)		0.125	351	366 (14.40)	286 (11.30)	267 (10.50)	181 (7.13)	117 (4.60)	72.6 (160)
1321-3RB400-A (1)	400	0.030	231	274 (10.80)	254 (10.00)	254 (10.00)	131 (5.16)	117 (4.60)	38.1 (84)
1321-3RB400-B (1)		0.060	333	381 (15.00)	286 (11.30)	292 (11.50)	172 (6.76)	117 (4.60)	53.5 (118)
1321-3RB400-C (1)		0.105	293	366 (14.40)	286 (11.30)	318 (12.50)	184 (7.26)	117 (4.60)	67.6 (149)
1321-3R500-A (1)	500	0.025	266	274 (10.80)	229 (9.00)	267 (10.50)	140 (5.50)	117 (4.60)	42.2 (93)
1321-3R500-B (1)		0.050	340	366 (14.40)	292 (11.50)	292 (11.50)	172 (6.76)	117 (4.60)	53.5 (118)
1321-3R500-C (1)		0.085	422	366 (14.40)	292 (11.50)	338 (13.30)	248 (9.76)	117 (4.60)	95.3 (210)
1321-3R600-A (1)	600	0.020	307	366 (14.40)	292 (11.50)	254 (10.00)	134 (5.26)	117 (4.60)	54.4 (120)
1321-3R600-B (1)		0.040	414	366 (14.40)	286 (11.30)	305 (12.00)	203 (8.00)	117 (4.60)	79.4 (175)
1321-3R600-C (1)		0.065	406	366 (14.40)	286 (11.30)	381 (15.00)	235 (9.26)	117 (4.60)	122.5 (270)
1321-3R750-A (1)	750	0.015	427	366 (14.40)	292 (11.50)	279 (11.00)	168 (6.63)	183 (7.20)	63.5 (140)
1321-3R750-B (1)		0.029	630	366 (14.40)	292 (11.50)	318 (12.50)	204 (8.01)	183 (7.20)	86.2 (190)
1321-3R750-C (1)		0.048	552	366 (14.40)	368 (14.50)	356 (14.00)	235 (9.26)	183 (7.20)	120.2 (265)
1321-3R750-E (1)		0.060	810	366 (14.40)	368 (14.50)	381 (15.00)	276 (10.88)	183 (7.20)	147.4 (325)
1321-3R850-A (1)	850	0.015	799	451 (17.80)	394 (15.50)	368 (14.50)	191 (7.50)	183 (7.20)	88.0 (195)
1321-3R850-B (1)		0.027	756	451 (17.80)	394 (15.50)	394 (15.50)	208 (8.20)	183 (7.20)	98.0 (215)
1321-3R850-C (1)		0.042	758	451 (17.80)	400 (15.80)	445 (17.50)	208 (8.20)	183 (7.20)	143.0 (315)
1321-3R1000-B (1)	1000	0.022	964	514 (20.25)	425 (16.80)	330 (13.00)	216 (8.50)	183 (7.20)	185.0 (408)
1321-3R1000-C (1)		0.038	960	514 (20.25)	425 (16.80)	381 (15.00)	273 (10.76)	183 (7.20)	267.2 (589)

(1) Removable lifting rings are supplied with the unit.

1321 Reflective Wave Reduction (RWR) Devices

Description of Reflected Wave Phenomenon

The inverter section of a drive does not produce sinusoidal voltage, but rather a series of voltage pulses created from the DC bus. These pulses travel down the motor cables to the motor and then reflected back to the drive. The reflection is dependant on the rise time of the drive output voltage, cable characteristics, cable length and motor impedance. If the voltage reflection is combined with another subsequent pulse, peak voltages can be at a destructive level. A single IGBT drive output may have reflected wave transient voltage stresses of up to twice (2 pu or per unit) the DC bus voltage between its own output wires. Multiple drive output wires in a single conduit or wire tray further increase output wire voltage stress between multi-drive output wires that are touching. Drive #1 may have a (+) 2 pu stress while drive #2 may simultaneously have a (–) 2 pu stress.

Refer to the Wiring & Grounding Guidelines for PWM Drives (publication DRIVES-IN001) for details.

Applying RWR Devices

At the Output of the Drive

In long motor lead applications, an Allen-Bradley 1321 RWR located between the drive and motor helps to reduce dv/dt and motor terminal peak voltages. The use of an RWR device also helps protect the drive from surge currents caused by rapid changes in the load.

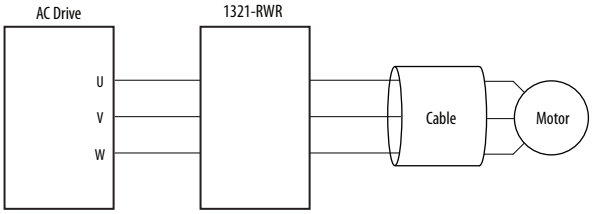

- Protect Motors from Long Lead Effects
- Reduce Output Voltage dv/dt
- Extend Semiconductor Life
- Reduce Surge Currents
- Reduce Motor Temperature
- Reduce Audible Motor Noise

Motor Protection

Allen-Bradley Reflective Wave Reduction devices can help protect motors from high peak voltages.

For IGBT drive applications with long drive-to-motor lead lengths, Allen-Bradley RWR devices can help protect against fast dv/dt rise times.

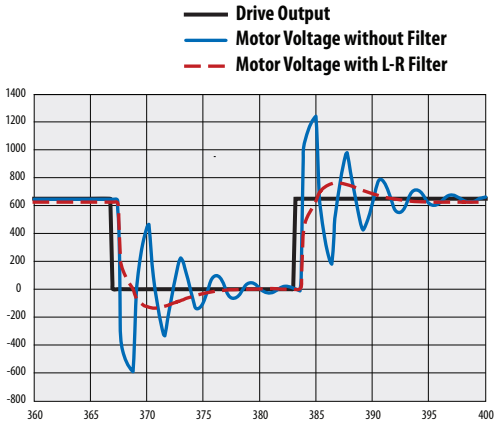

Catalog Number Explanation

IMPORTANT 1321-RWR products replace existing 1204-RWR products. However, 1204-RWRC modules (RWR and Common Mode Choke assembly) are still available.

1-8		Position 9		11	12
1321 –	RWR	8	–	D	P
a		b		c	d

a

Product	
Code	Type
1321-RWR	Reflective Wave Reduction Device

b1

Rating	
400-480V ac	
Code	Fundamental Amps
8	8
12	12
18	18
25	25
35	35
45	45
55	55
80	80
100	100
130	130
160	160
200	200
250	250
320	320

b2

Rating	
600V ac	
Code	Fundamental Amps
8	8
12	12
18	18
25	25
35	35
45	45
55	55
80	80
100	100
130	130
160	160
200	200
250	250

c

Voltage Rating	
Code	Voltage
D	400/480V ac
E	600V ac

d

Enclosure	
Code	Description
P	Panel Mount
A	NEMA/UL Type 1 ∗
W	NEMA/UL Type 3R ∗

∗ Not available

Specifications

Specification		Rating
Material	Enclosures	IP00 (Open)
	Terminations	1-45 Amp (fundamental) Ratings – Finger guard IP20 terminal block
		80-160 Amp (fundamental) Ratings – Solid copper box lugs
		200-400 Amp (fundamental) Ratings – Copper tab terminals
		401 Amps and Above – Copper tab terminals
Harmonic Compensation	All line reactors are compensated for the additional currents and high frequencies caused by the presence of harmonics	
General Protection	Impedance	3%
	Overload Rating	300% of fundamental current for (1) minute
IGBT Protection	First turn triple insulated offering protection up to 16kV	16,000 Volts per Microsecond dv/dt Protection 20 kHz Maximum Switching Frequency
Electrical	Max. Rated Voltage	600V AC, 50/60 Hz frequency
	Max. Switching Freq.	4 kHz
	Temperature Rise	115 degrees C.
	Dielectric Strength	4,000 Volts rms (5,600 volts peak)
	Inductance Curve	100% at 100% current, 100% at 150% current, 50% at 350% current
	Insulation System	Class H (180 degrees C or better)
	Impregnation	High bond strength epoxy impregnation, 4,000V high dielectric strength
Environmental	Ambient Temperature	45 degrees C.
	U.L. Listed	UL-508 - IP00, IP20, and IP11
	International	Conforms to VDE 0550
	CE	Not certified

Termination

Allen-Bradley 1321 RWR devices rated 45 Amps (fundamental) and below are supplied with an integral mounted terminal block. Devices rated from 55 to 160 Amps (fundamental) are supplied with box lugs. Devices rated 200 to 400 Amps (fundamental) can be supplied with box lugs or copper tabs. Above 400 Amps (fundamental), solid copper tabs are used.

Approximate Dimensions, Weights, Wire Size and Terminal Blocks

The dimensions and weights provided on the following page is for estimating purposes only. Contact your Allen-Bradley Sales Office if certified drawings are required for planning and installation.

RWR Catalog No. x = D (400V), E (600V)	Fund. Amps	Cont. Amps	Wire Size	Watts Loss		Figure	Dimensions *mm (in.)*					Weight
			mm^2 (AWG)	400V	600V	(see page 15)	A	B	C	D	E	kg (lbs.)
1321-RWR8-xP	8	12	2.5-4.0 (14-12)	389	536	1	282.6 (11.13)	298.5 (11.75)	171.5 (6.75)	7.4 (0.29)	7.4 x 11.6 (0.29 x 0.46)	4.8 (10.5)
1321-RWR12-xP	12	18	2.5-4.0 (14-12)	391	406	1	282.6 (11.13)	298.5 (11.75)	174.6 (6.88)	7.4 (0.29)	7.4 x 11.6 (0.29 x 0.46)	5.7 (12.5)
1321-RWR18-xP	18	27	2.5-4.0 (14-12)	403	551	1	282.6 (11.13)	298.5 (11.75)	174.6 (6.88)	7.4 (0.29)	7.4 x 11.6 (0.29 x 0.46)	7.3 (16)
1321-RWR25-xP	25	37.5	6.0 (10)	412	562	1	282.6 (11.13)	298.5 (11.75)	193.7 (7.63)	7.4 (0.29)	7.4 x 11.6 (0.29 x 0.46)	7.7 (17)
1321-RWR35-xP	35	52.5	10.0-16.0 (8-6)	414	429	1	282.6 (11.13)	298.5 (11.75)	193.7 (7.63)	7.4 (0.29)	7.4 x 11.6 (0.29 x 0.46)	8.8 (19.5)
1321-RWR45-xP	45	67.5	16.0 (6)	422	572	2	319.1 (12.56)	392.1 (15.44)	158.8 (6.25)	10.5 (0.41)	10.3 x 17.9 (0.41 x 0.70)	17.5 (38.5)
1321-RWR55-xP	55	82.5	25.0 (4)	427	577	2	320.7 (12.63)	392.1 (15.44)	158.8 (6.25)	10.5 (0.41)	10.3 x 17.9 (0.41 x 0.70)	18.4 (40.5)
1321-RWR80-xP	80	120	35.0-50.0 (2-1/0)	446	341	2	322.3 (12.69)	395.3 (15.56)	177.8 (7.00)	10.5 (0.41)	10.3 x 17.9 (0.41 x 0.70)	20.4 (45)
1321-RWR100-xP	100	150	50.0-70.0 (1/0-2/0)	444	339	2	320.7 (12.63)	393.7 (15.50)	187.3 (7.38)	10.5 (0.41)	10.3 x 17.9 (0.41 x 0.70)	22.5 (49.5)
1321-RWR130-xP	130	195	70.0-120.0 (2/0-4/0)	630	495	2	317.5 (12.50)	390.5 (15.38)	187.3 (7.38)	10.5 (0.41)	10.3 x 17.9 (0.41 x 0.70)	24.5 (54)
1321-RWR160-xP	160	240	120.0 (4/0)	599	464	3	355.6 (14.00)	438.2 (17.25)	250.8 (9.88)	10.5 (0.41)	10.3 x 25.8 (0.41 x 1.02)	30.8 (68)
1321-RWR200-xP	200	300	120.0-185.0 (4/0-350 MCM)	618	612	2	317.5 (12.50)	393.7 (15.50)	214.3 (8.44)	10.5 (0.41)	10.3 x 17.9 (0.41 x 0.70)	29.9 (66)
1321-RWR250-xP	250	375	185.0 (350 MCM)	681	546	3	358.8 (14.13)	439.8 (17.31)	225.4 (8.88)	10.5 (0.41)	10.3 x 25.8 (0.41 x 1.02)	41.7 (92)
1321-RWR320-DP	320	480	240.0 (500 MCM)	489	NA	3	358.8 (14.13)	438.2 (17.25)	250.8 (9.88)	10.5 (0.41)	10.3 x 25.8 (0.41 x 1.02)	52.2 (115)

1321-RWR Assembly Components

400/480V			
	Resistor		
Reactor	Ohms	Watts	Wire Size (AWG)
1321-3R8-B	50	250	14-12
1321-3R12-B	50	250	14-12
1321-3R18-B	50	250	14-12
1321-3R25-B	50	250	10
1321-3R35-B	50	250	8-6
1321-3R45-B	50	250	6
1321-3R55-B	50	250	4
1321-3R80-B	50	250	2-1/0
1321-3R100-B	50	250	1/0-2/0
1321-3R130-B	50	300	2/0-4/0
1321-3R160-B	50	300	4/0
1321-3R200-B	50	300	4/0-350 MCM
1321-3RB250-B	50	300	350 MCM
1321-3R320-B	50	300	500 MCM

600V			
	Resistor		
Reactor	Ohms	Watts	Wire Size (AWG)
1321-3R8-B	50	375	14-12
1321-3R12-B	50	375	14-12
1321-3R18-B	50	375	14-12
1321-3R25-B	50	375	10
1321-3R35-B	50	375	8-6
1321-3R45-B	50	375	6
1321-3R55-B	50	375	4
1321-3R80-B	50	375	2-1/0
1321-3R100-B	50	375	1/0-2/0
1321-3R130-B	50	420	2/0-4/0
1321-3R160-B	50	420	4/0
1321-3R200-B	50	420	4/0-350 MCM
1321-3RB250-B	50	420	350 MCM

Dimension Reference

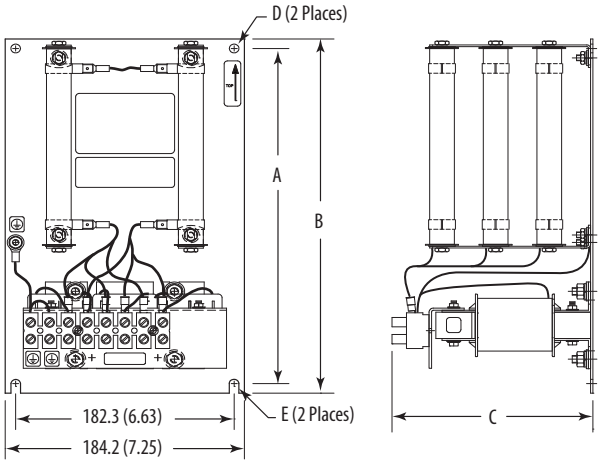

Figure 1

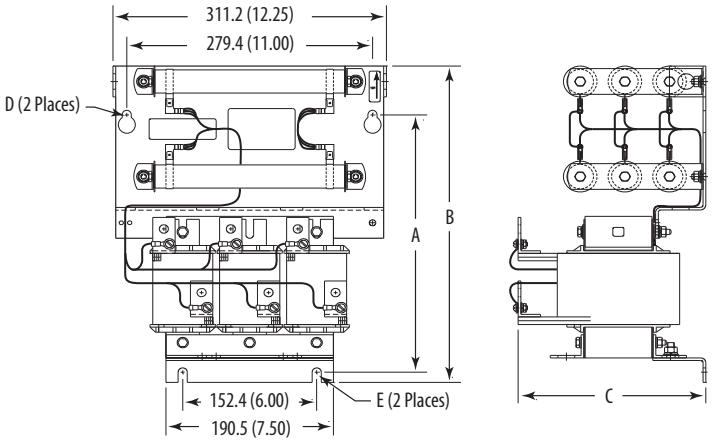

Figure 2

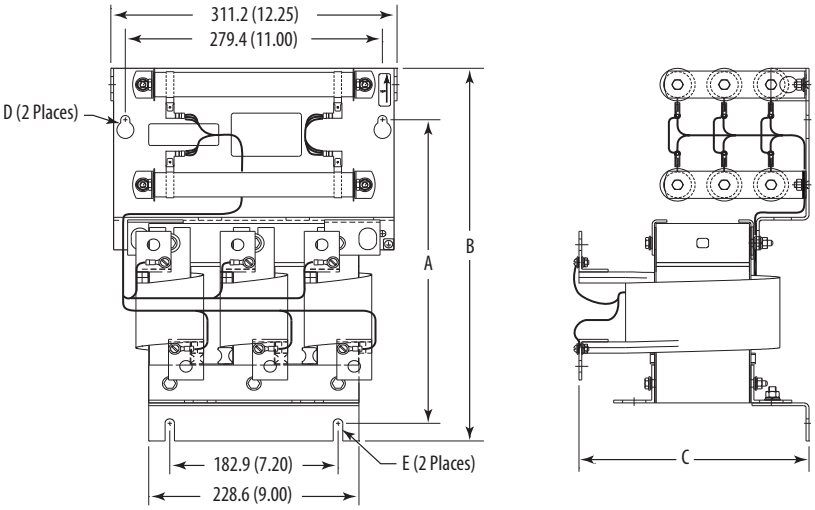

Figure 3

Terminal Block Details

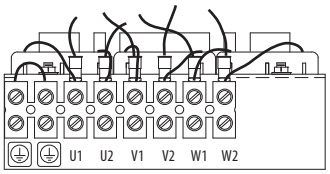

Figure 1

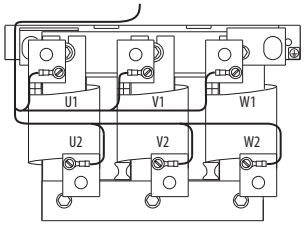

Figures 2 & 3

1321-3TH/3TW Series Three-Phase Isolation Transformers

Allen-Bradley 1321 Isolation Transformers are designed to meet the standard horsepower, voltage ratings and harmonics of the Allen-Bradley variable speed drives.

Catalog Number Explanation

Position	1-4		6	7	8	9		11	12
	1321	–	3	T	W	005	–	A	A
	a		b	c	d	e		f	g

a

Product	
Code	Type
1321	Power Component

b

Phases	
Code	Description
3	Three-Phase

c

Device	
Code	Description
T	Transformer

d

Mounting	
Code	Description
W	Wall
H	Floor

e

Rating	
Code	kVA
005	5
007	7.5
011	11
014	14
020	20
027	27
034	34
040	40
051	51
063	63
075	75
093	93
118	118
145	145
175	175
220	220
275	275
330	330
440	440
550	550
660	660
770	770
880	880

f

Primary Voltage	
Code	Voltage
A	230V ac
B	460V ac
C	575V ac
X	208V ac

g

Secondary Voltage	
Code	Voltage
A	230V ac
B	460V ac
C	575V ac
X	208V ac

Specifications

Specification		Rating
Electrical	General	Delta primary, wye secondary, 60 Hz, Aluminum wound, Neutral terminal available for customer use
	Standard Voltage Taps	5.0-175 kVA 1-5.0% FCAN & FCBN
		220-880 kVA 1-2.5% FCAN & FCBN
	Insulation System	Class 220
		150 degrees C Rise Over 40 degrees C Ambient
		Peak 40 degrees C Ambient with 30 degrees C 24 Hour Avg.
	Efficiency	98% (2% losses)
Environmental	Elevation	Up to 1,000 Meters. Above 1,000 Meters, consult factory for derating
	U.L. Listed	File E112313
Construction	Enclosure	NEMA/UL Type 3R (IP32)
		Heavy duty ventilated enclosure with metal screens protecting all vents and finished in ANSI 61 grey
	Termination	Transformers up to 75kVA have integral high and low voltage lugs installed, suitable for copper or aluminum cable installation
	Conduit Entry	Standard knockouts on all enclosures
	Mounting	5-51 kVA units suitable for either floor or wall mounting. 63-75 kVA units suitable for floor, wall or ceiling mounting with mounting kit 1321-3TWM2 (Style NH3). Larger units are floor mount only
General	Impedance	4-6% impedance (nominal)
	Short Circuit Capability	Meets UL short circuit withstand capability
	Overload Rating	Windings designed to withstand overcurrent of 150% of rated load for 60 Seconds or 200% of rated load for 30 Seconds
	Duty Cycle	(1) start every (2) hours
	Thermostats	Thermostats with 1 N.C contact in each coil, wired in series and integral on all units
	K Factor	4
	Custom Options (consult factory for operating information)	50 Hz units
		Electrostatic shield (60dB attenuation typical)
		NEMA/UL Type 2 or IP20 (NEMA/UL Type 1)
		Core and coil construction (open)
		Additional HP or kVA sizes, voltages, extra primary taps, copper wound units, etc.

Approximate Mounting Dimensions

IP32, NEMA/UL Type 3R - Styles NH3 through NH4

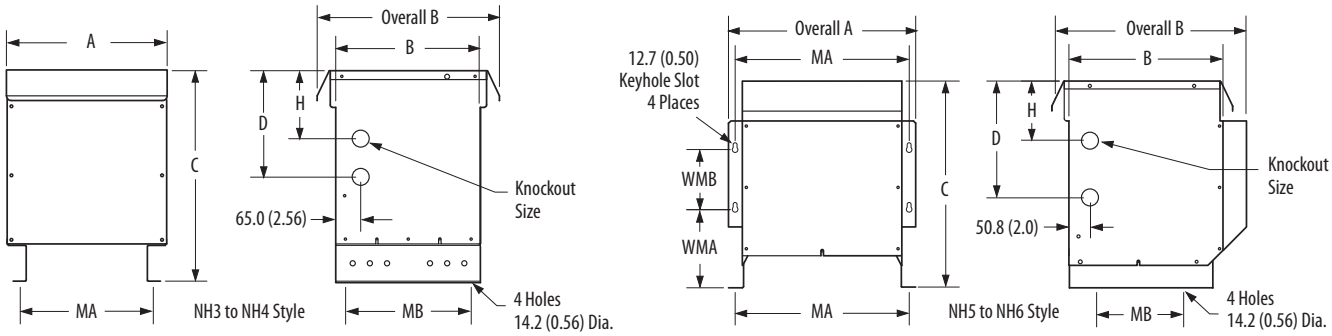

Dimensions in mm (in.)												
Style	**A**	**Overall A**	**B**	**Overall B**	**C**	**D**	**H**	**K**	**MA**	**MB**	**WMB**	**WMA**
NH3	660.4 (26.00)	–	533.4 (21.00)	635.0 (25.00)	66.0 (38.00)	609.6 (24.00)	355.6 (14.00)	50.8 x 76.2 (2.00 x 3.00)	546.1 (21.50)	482.6 (19.00)	–	–
NH4	812.8 (32.00)	–	647.7 (25.50)	749.3 (29.50)	68.0 (41.00)	609.6 (24.00)	304.8 (12.00)	50.8 x 76.2 (2.00 x 3.00)	596.9 (23.50)	596.9 (23.50)	–	–
NH5 (1)	425.5 (16.75)	492.8 (19.40)	381.0 (15.00)	513.1 (20.20)	546.1 (21.50)	304.8 (12.00)	152.4 (6.00)	35.1 x 44.4 (1.38 x 1.75)	457.2 (18.00)	228.6 (9.00)	177.8 (7.00)	184.4 (7.26)
NH6 (1)	546.1 (21.50)	607.1 (23.90)	495.3 (19.50)	730.3 (28.75)	730.3 (28.75)	431.8 (17.00)	215.9 (8.50)	35.1 x 44.4 (1.38 x 1.75)	577.9 (22.75)	228.6 (9.00)	203.2 (8.00)	247.1 (9.73)

(1) Enclosure Styles NH1 and NH2 are replaced by NH5 and NH6 through 1321-3TH005 - 1321-3TH051 ratings.

IP32, NEMA/UL Type 3R -Styles NJ1 through NJ6

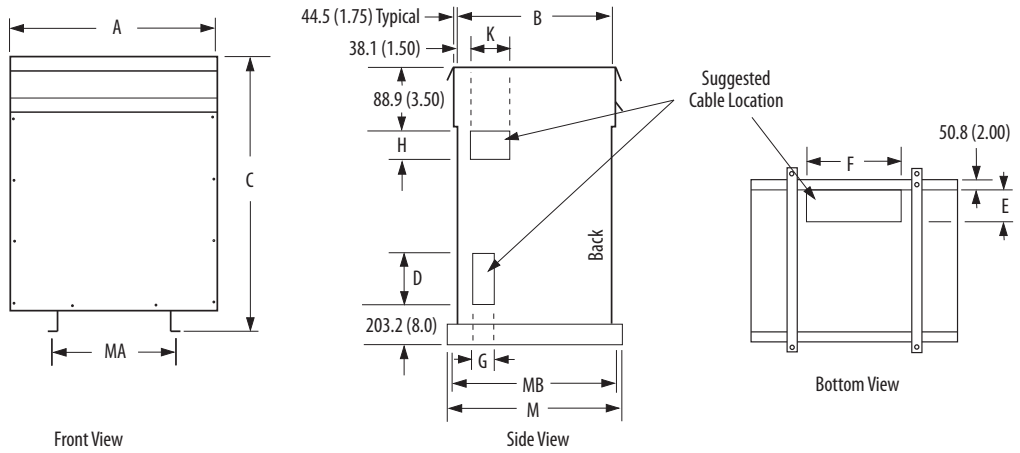

Dimensions in mm (in.)												
Style	**A**	**B**	**C**	**D**	**E**	**F**	**G**	**H**	**K**	**M**	**MA**	**MB**
NJ1	1003.3 (39.50)	762.0 (30.00)	1308.1 (51.50)	254.0 (10.00)	190.5 (7.50)	546.1 (21.50)	203.2 (8.00)	165.1 (6.50)	342.9 (13.50)	863.6 (34.00)	609.6 (24.00)	812.8 (32.00)
NJ2	1239.1 (48.50)	836.6 (34.00)	1498.6 (59.00)	330.2 (13.00)	215.9 (8.50)	635.0 (25.00)	228.6 (9.00)	215.9 (8.50)	393.7 (15.50)	965.2 (38.00)	698.5 (27.50)	914.4 (36.00)
NJ3	1308.1 (51.50)	990.6 (39.00)	1676.4 (66.00)	406.4 (16.00)	241.3 (9.50)	800.1 (31.50)	254.0 (10.00)	292.1 (11.50)	457.2 (18.00)	1092.2 (43.00)	863.6 (34.00)	1041.4 (41.00)
NJ6	1625.6 (64.00)	1016.0 (40.00)	1727.2 (68.00)	406.4 (16.00)	266.7 (10.50)	952.5 (37.50)	279.4 (11.00)	292.1 (11.50)	457.2 (18.00)	1117.6 (44.00)	1016.0 (40.00)	1066.8 (42.00)

Wiring Diagrams, Ratings and Weights

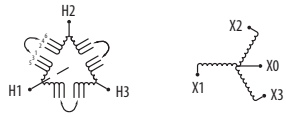

Wiring Diagram 1

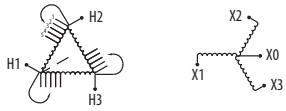

Wiring Diagram 2

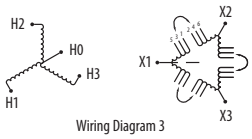

Wiring Diagram 3

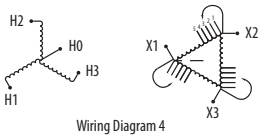

Wiring Diagram 4

kVA	Catalog Number	Style	Primary Voltage	Secondary Voltage	Wiring Diagram	Weight kg (lbs.)
5	1321-3TW005-AA	NH5	230	230	1	63.5 (140)
	1321-3TW005-AB	NH5	230	460	3	63.5 (140)
	1321-3TW005-AC	NH5	230	575	3	63.5 (140)
	1321-3TW005-BA	NH5	460	230	1	63.5 (140)
	1321-3TW005-BB	NH5	460	460	1	63.5 (140)
	1321-3TW005-BC	NH5	460	575	3	63.5 (140)
	1321-3TW005-CA	NH5	575	230	1	63.5 (140)
	1321-3TW005-CB	NH5	575	460	1	63.5 (140)
	1321-3TW005-CC	NH5	575	575	1	63.5 (140)
	1321-3TW005-XX	NH5	208	208	1	63.5 (140)
40	1321-3TW040-AA	NH6	230	230	2	145.2 (320)
	1321-3TW040-AB	NH6	230	460	4	145.2 (320)
	1321-3TW040-AC	NH6	230	575	4	145.2 (320)
	1321-3TW040-BA	NH6	460	230	2	145.2 (320)
	1321-3TW040-BB	NH6	460	460	2	145.2 (320)
	1321-3TW040-BC	NH6	460	575	4	145.2 (320)
	1321-3TW040-CA	NH6	575	230	2	145.2 (320)
	1321-3TW040-CB	NH6	575	460	2	145.2 (320)
	1321-3TW040-CC	NH6	575	575	2	145.2 (320)
51	1321-3TW051-AA	NH6	230	230	2	190.5 (420)
	1321-3TW051-AB	NH6	230	460	4	190.5 (420)
	1321-3TW051-AC	NH6	230	575	4	190.5 (420)
	1321-3TW051-BA	NH6	460	230	2	190.5 (420)
	1321-3TW051-BB	NH6	460	460	2	190.5 (420)
	1321-3TW051-BC	NH6	460	575	4	190.5 (420)
	1321-3TW051-CA	NH6	575	230	2	190.5 (420)
	1321-3TW051-CB	NH6	575	460	2	190.5 (420)
	1321-3TW051-CC	NH6	575	575	2	190.5 (420)
63	1321-3TH063-AA	NH3	230	230	2	244.9 (540)
	1321-3TH063-AB	NH3	230	460	4	244.9 (540)
	1321-3TH063-AC	NH3	230	575	4	244.9 (540)
	1321-3TH063-BA	NH3	460	230	2	244.9 (540)
	1321-3TH063-BB	NH3	460	460	2	244.9 (540)
	1321-3TH063-BC	NH3	460	575	4	244.9 (540)
	1321-3TH063-CA	NH3	575	230	2	244.9 (540)
	1321-3TH063-CB	NH3	575	460	2	244.9 (540)
	1321-3TH063-CC	NH3	575	575	2	244.9 (540)

kVA	Catalog Number	Style	Primary Voltage	Secondary Voltage	Wiring Diagram	Weight kg (lbs.)
75	1321-3TH075-AA	NH3	230	230	2	263.1 (580)
	1321-3TH075-AB	NH3	230	460	4	263.1 (580)
	1321-3TH075-AC	NH3	230	575	4	263.1 (580)
	1321-3TH075-BA	NH3	460	230	2	263.1 (580)
	1321-3TH075-BB	NH3	460	460	2	263.1 (580)
	1321-3TH075-BC	NH3	460	575	4	263.1 (580)
	1321-3TH075-CA	NH3	575	230	2	263.1 (580)
	1321-3TH075-CB	NH3	575	460	2	263.1 (580)
	1321-3TH075-CC	NH3	575	575	2	263.1 (580)
93	1321-3TH093-AA	NH3	230	230	2	285.8 (630)
	1321-3TH093-AB	NH3	230	460	4	285.8 (630)
	1321-3TH093-AC	NH3	230	575	4	285.8 (630)
	1321-3TH093-BA	NH3	460	230	2	285.8 (630)
	1321-3TH093-BB	NH3	460	460	2	285.8 (630)
	1321-3TH093-BC	NH3	460	575	4	285.8 (630)
	1321-3TH093-CA	NH3	575	230	2	285.8 (630)
	1321-3TH093-CB	NH3	575	460	2	285.8 (630)
	1321-3TH093-CC	NH3	575	575	2	285.8 (630)
118	1321-3TH118-AA	NH3	230	230	2	328.9 (725)
	1321-3TH118-AB	NH3	230	460	4	328.9 (725)
	1321-3TH118-AC	NH3	230	575	4	328.9 (725)
	1321-3TH118-BA	NH3	460	230	2	328.9 (725)
	1321-3TH118-BB	NH3	460	460	2	328.9 (725)
	1321-3TH118-BC	NH3	460	575	4	328.9 (725)
	1321-3TH118-CA	NH3	575	230	2	328.9 (725)
	1321-3TH118-CB	NH3	575	460	2	328.9 (725)
	1321-3TH118-CC	NH3	575	575	2	328.9 (725)
145	1321-3TH145-AA	NH4	230	230	2	408.2 (900)
	1321-3TH145-AB	NH4	230	460	4	408.2 (900)
	1321-3TH145-AC	NH4	230	575	4	408.2 (900)
	1321-3TH145-BA	NH4	460	230	2	408.2 (900)
	1321-3TH145-BB	NH4	460	460	2	408.2 (900)
	1321-3TH145-BC	NH4	460	575	4	408.2 (900)
	1321-3TH145-CA	NH4	575	230	2	408.2 (900)
	1321-3TH145-CB	NH4	575	460	2	408.2 (900)
	1321-3TH145-CC	NH4	575	575	2	408.2 (900)

continued

kVA	Catalog Number	Style	Primary Voltage	Secondary Voltage	Wiring Diagram	Weight kg (lbs.)
175	1321-3TH175-AA	NH4	230	230	2	453.6 (1000)
	1321-3TH175-AB	NH4	230	460	4	453.6 (1000)
	1321-3TH175-AC	NH4	230	575	4	453.6 (1000)
	1321-3TH175-BA	NH4	460	230	2	453.6 (1000)
	1321-3TH175-BB	NH4	460	460	2	453.6 (1000)
	1321-3TH175-BC	NH4	460	575	4	453.6 (1000)
	1321-3TH175-CA	NH4	575	230	2	453.6 (1000)
	1321-3TH175-CB	NH4	575	460	2	453.6 (1000)
	1321-3TH175-CC	NH4	575	575	2	453.6 (1000)
220	1321-3TH220-AA	NJ1	230	230	2	589.7 (1300)
	1321-3TH220-AB	NJ1	230	460	4	589.7 (1300)
	1321-3TH220-AC	NJ1	230	575	4	589.7 (1300)
	1321-3TH220-BA	NJ1	460	230	2	589.7 (1300)
	1321-3TH220-BB	NJ1	460	460	2	589.7 (1300)
	1321-3TH220-BC	NJ1	460	575	4	589.7 (1300)
	1321-3TH220-CA	NJ1	575	230	2	589.7 (1300)
	1321-3TH220-CB	NJ1	575	460	2	589.7 (1300)
	1321-3TH220-CC	NJ1	575	575	2	589.7 (1300)
275	1321-3TH275-AA	NJ1	230	230	2	680.4 (1500)
	1321-3TH275-AB	NJ1	230	460	4	680.4 (1500)
	1321-3TH275-AC	NJ1	230	575	4	680.4 (1500)
	1321-3TH275-BA	NJ1	460	230	2	680.4 (1500)
	1321-3TH275-BB	NJ1	460	460	2	680.4 (1500)
	1321-3TH275-BC	NJ1	460	575	4	680.4 (1500)
	1321-3TH275-CA	NJ1	575	230	2	680.4 (1500)
	1321-3TH275-CB	NJ1	575	460	2	680.4 (1500)
	1321-3TH275-CC	NJ1	575	575	2	680.4 (1500)
330	1321-3TH330-AA	NJ1	230	230	2	771.1 (1700)
	1321-3TH330-AB	NJ1	230	460	4	771.1 (1700)
	1321-3TH330-AC	NJ1	230	575	4	771.1 (1700)
	1321-3TH330-BA	NJ1	460	230	2	771.1 (1700)
	1321-3TH330-BB	NJ1	460	460	2	771.1 (1700)
	1321-3TH330-BC	NJ1	460	575	4	771.1 (1700)
	1321-3TH330-CA	NJ1	575	230	2	771.1 (1700)
	1321-3TH330-CB	NJ1	575	460	2	771.1 (1700)
	1321-3TH330-CC	NJ1	575	575	2	771.1 (1700)
440	1321-3TH440-AA	NJ2	230	230	1	907.2 (2000)
	1321-3TH440-AB	NJ2	230	460	3	907.2 (2000)
	1321-3TH440-AC	NJ2	230	575	3	907.2 (2000)
	1321-3TH440-BA	NJ2	460	230	1	907.2 (2000)
	1321-3TH440-BB	NJ2	460	460	1	907.2 (2000)

kVA	Catalog Number	Style	Primary Voltage	Secondary Voltage	Wiring Diagram	Weight kg (lbs.)
440	1321-3TH440-BC	NJ2	460	575	3	907.2 (2000)
	1321-3TH440-CA	NJ2	575	230	1	907.2 (2000)
	1321-3TH440-CB	NJ2	575	460	1	907.2 (2000)
	1321-3TH440-CC	NJ2	575	575	1	907.2 (2000)
550	1321-3TH550-AA	NJ2	230	230	1	1134.0 (2500)
	1321-3TH550-AB	NJ2	230	460	3	1134.0 (2500)
	1321-3TH550-AC	NJ2	230	575	3	1134.0 (2500)
	1321-3TH550-BA	NJ2	460	230	1	1134.0 (2500)
	1321-3TH550-BB	NJ2	460	460	1	1134.0 (2500)
	1321-3TH550-BC	NJ2	460	575	3	1134.0 (2500)
	1321-3TH550-CA	NJ2	575	230	1	1134.0 (2500)
	1321-3TH550-CB	NJ2	575	460	1	1134.0 (2500)
	1321-3TH550-CC	NJ2	575	575	1	1134.0 (2500)
660	1321-3TH660-AA	NJ3	230	230	1	1360.8 (3000)
	1321-3TH660-AB	NJ3	230	460	3	1360.8 (3000)
	1321-3TH660-AC	NJ3	230	575	3	1360.8 (3000)
	1321-3TH660-BA	NJ3	460	230	1	1360.8 (3000)
	1321-3TH660-BB	NJ3	460	460	1	1360.8 (3000)
	1321-3TH660-BC	NJ3	460	575	3	1360.8 (3000)
	1321-3TH660-CA	NJ3	575	230	1	1360.8 (3000)
	1321-3TH660-CB	NJ3	575	460	1	1360.8 (3000)
	1321-3TH660-CC	NJ3	575	575	1	1360.8 (3000)
770	1321-3TH770-AA	NJ3	230	230	1	1587.6 (3500)
	1321-3TH770-AB	NJ3	230	460	3	1587.6 (3500)
	1321-3TH770-AC	NJ3	230	575	3	1587.6 (3500)
	1321-3TH770-BA	NJ3	460	230	1	1587.6 (3500)
	1321-3TH770-BB	NJ3	460	460	1	1587.6 (3500)
	1321-3TH770-BC	NJ3	460	575	3	1587.6 (3500)
	1321-3TH770-CA	NJ3	575	230	1	1587.6 (3500)
	1321-3TH770-CB	NJ3	575	460	1	1587.6 (3500)
	1321-3TH770-CC	NJ3	575	575	1	1587.6 (3500)
880	1321-3TH880-AA	NJ6	230	230	1	1678.3 (3700)
	1321-3TH880-AB	NJ6	230	460	3	1678.3 (3700)
	1321-3TH880-AC	NJ6	230	575	3	1678.3 (3700)
	1321-3TH880-BA	NJ6	460	230	1	1678.3 (3700)
	1321-3TH880-BB	NJ6	460	460	1	1678.3 (3700)
	1321-3TH880-BC	NJ6	460	575	3	1678.3 (3700)
	1321-3TH880-CA	NJ6	575	230	1	1678.3 (3700)
	1321-3TH880-CB	NJ6	575	460	1	1678.3 (3700)
	1321-3TH880-CC	NJ6	575	575	1	1678.3 (3700)

1321-M Common Mode Chokes

1321-M Common Mode Chokes can be installed with 1305, 1336 PLUS II, 1336 IMPACT™ and PowerFlex® 70/700 AC drives. When installed at the drive output the common mode choke helps to guard against interference with other electrical equipment (Programmable Controllers, sensors, analog circuits, etc.). In addition, reducing the PWM carrier frequency reduces the effects and lowers the risk of common mode noise interference.

Catalog Number Explanation

Position			
1-4		6	7
1321	–	M	009
a		b	c

a

Product	
Code	Type
1321	Power Component

b

Device	
Code	Description
M	Common Mode Choke

c

Current Rating	
Code	Amps
001 *	1
009	9
048	48
180	180
670	670

* Same core as 1321-M009. Can be used in place of the M009, M048 or M180 if the terminal block and windings typical of those ratings are not desired.

Ratings

Choke Type	Used With	Ratings	Catalog Number
Open Style, 9A (with terminal strip)	All Drives	Communication Cables, Analog Signal Cables, etc.	1321-M001
	PowerFlex 70/700	0.37-1.5 kW (0.5-2 HP) 230V 0.37-4 kW (0.5-5 HP) 480V	1321-M009
	1305 and 1336 PLUS II	0.37-2.2 kW (0.5-2 HP) 230V 0.37-3.7 kW (0.5-5 HP) 480V	
	1336 IMPACT	0.37-3.7 kW (0.5-5 HP) 480V	
Open Style, 48A	PowerFlex 70/700	2.2-11 kW (3-15 HP) 230V 5.5-22 kW (7.5-30 HP) 480V 5.5-30 kW (7.5-40 HP) 600V	1321-M048
	1336 PLUS II	2.2-11 kW (3-15 HP) 230V 5.5-22 kW (7.5-30 HP) 480V 0.75-30 kW (1-40 HP) 600V	
	1336 IMPACT	5.5-22 kW (7.5-30 HP) 480V 5.5-30 kW (7.5-40 HP) 600V	
Open Style, 180A	PowerFlex 70/700	15-45 kW (20-60 HP) 230V 30-110 kW (40-150 HP) 480V 37-110 kW (50-150 HP) 600V	1321-M180
	1336 PLUS II	15-45 kW (20-60 HP) 230V 30-112 kW (40-150 HP) 480V 37-112 kW (50-150 HP) 600V	
	1336 IMPACT	30-112 kW (40-150 HP) 480V 37-93 kW (50-125 HP) 600V	
Open Style, 670A	PowerFlex 70/700	55-66 kW (75-100 HP) 230V 110-350 kW (150-500 HP) 480V 132-223 kW (200-300 HP) 600V	1321-M670
	1336 PLUS II	56-93 kW (75-125 HP) 230V 112-448 kW (150-600 HP) 480V 149-448 kW (200-600 HP) 600V	
	1336 IMPACT	112-448 kW (150-600 HP) 480V 149-448 kW (200-600 HP) 600V	

Approximate Mounting Dimensions

1321-M001

Dimensions are in mm (in.)

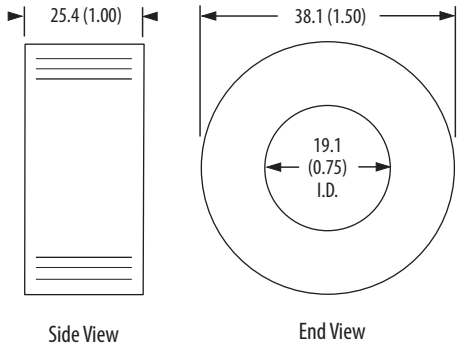

1321-M009

Dimensions are in mm (in.)

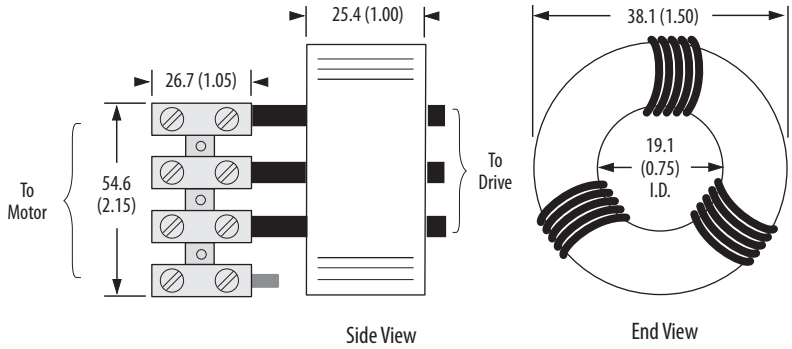

1321-M048

Dimensions are in mm (in.)

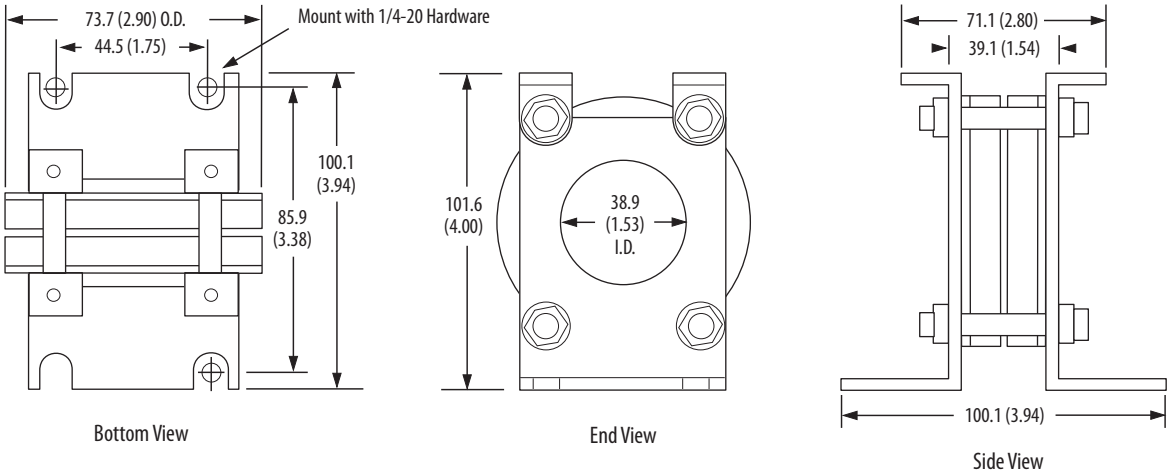

1321-M180

Dimensions are in mm (in.)

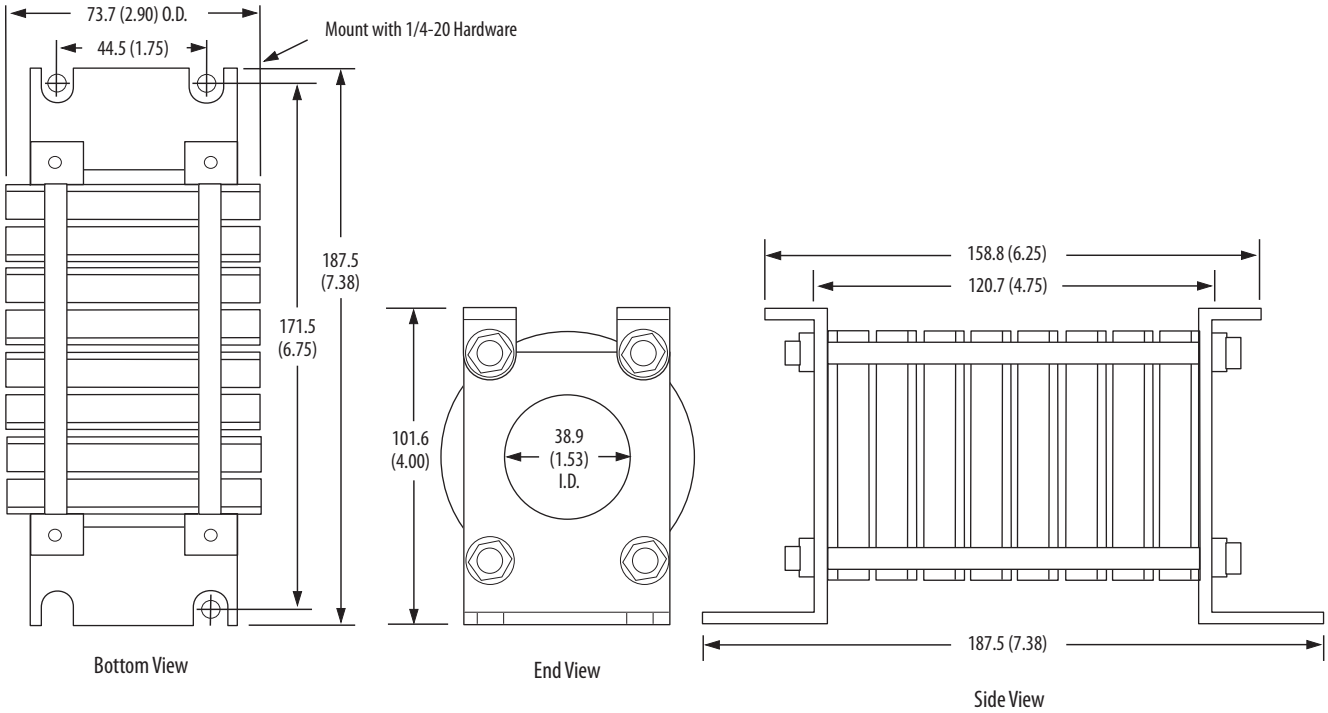

1321-M670

Dimensions are in mm (in.)

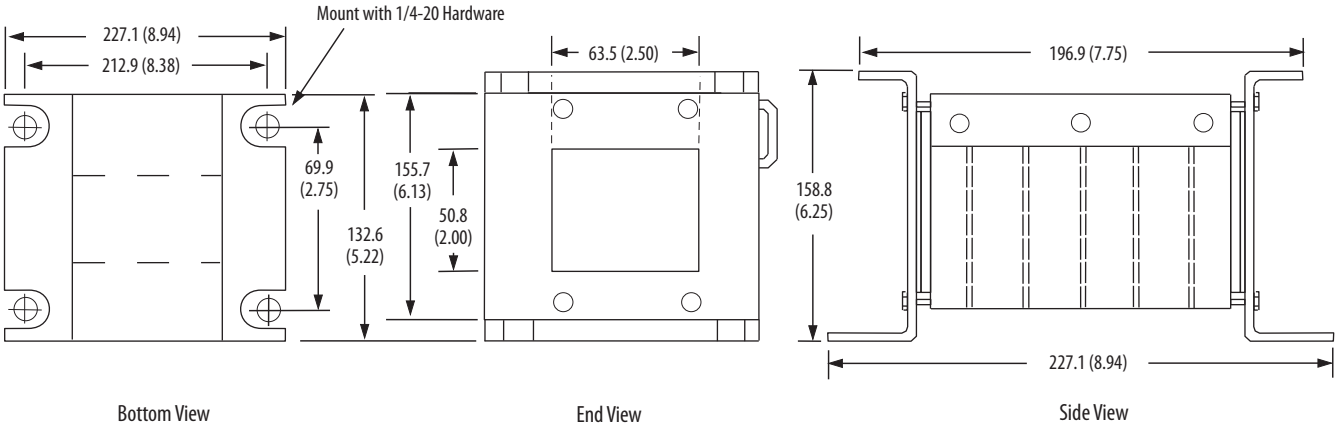

1321-DC DC Link Chokes

1321-DC DC Link Chokes can be installed with Frame C PowerFlex® 40 and all PowerFlex 400 drives. Add DC Link Chokes in series with the internal DC Bus to:

- Reduce AC Input Line Harmonics
- Help meet IEEE-519 limits
- Absorb Voltage/Current Spikes
- Reduce AC Ripple on DC Bus
- Reduce dV/dT and dI/dT rates
- Solve nuisance overvoltage tripping
- Reduce DC Bus Transient Overvoltage

Catalog Number Explanation

Position	1-4		6		7		9
	1321	–	DC		12	–	1
	a		b		c		d

a

Product	
Code	Type
1321	Power Component

b

Device	
Code	Description
DC	DC Link Choke

c

Current Rating	
Code	Amps
9	9
12	12
18	18
25	25
32	32
40	40

d

Inductance Rating	
Code	Description
1	Each DC Link Choke current rating may have more than one inductance rating. Refer to *Ratings* on page 25 for specific values.
2	
3	
4	

Specifications

Specification	Rating
General	UL-508 component recognized (File E180243)
	1000 Volts DC maximum
	For ripple frequency of 300 Hz or 360 Hz
	50 degrees C temperature rise
	Suitable for 40 degrees C ambient temperature
	Class B insulation system (130 degrees C)
	Suitable for ripple current of 10% peak-to-peak
	Touchsafe terminals in many ratings

Special Features

- Solid copper box lug type terminals on most sizes
- Specially constructed and epoxy impregnated for low noise
- Customized ratings also available - contact the factory for custom mounting, inductance, current or ripple requirements

Ratings

Catalog Number	Type	DC Amps	mH	Watts	Lug Size	Torque
1321-DC9-2	Open Style	9	3.22	7	22-14	4.5
1321-DC12-1	Open Style	12	1	5	22-14	4.5
1321-DC12-2	Open Style	12	2.1	7	18-4	20
1321-DC18-1	Open Style	18	0.65	5	18-4	20
1321-DC18-4	Open Style	18	3.75	17	18-4	20
1321-DC25-4	Open Style	25	1.75	13	18-4	20
1321-DC32-1	Open Style	32	0.85	11	18-4	20
1321-DC32-2	Open Style	32	1.62	14	18-4	20
1321-DC32-3	Open Style	32	2.68	21	18-4	20
1321-DC40-2	Open Style	40	0.75	15	18-4	20
1321-DC40-4	Open Style	40	2	29	18-4	20

Approximate Mounting Dimensions

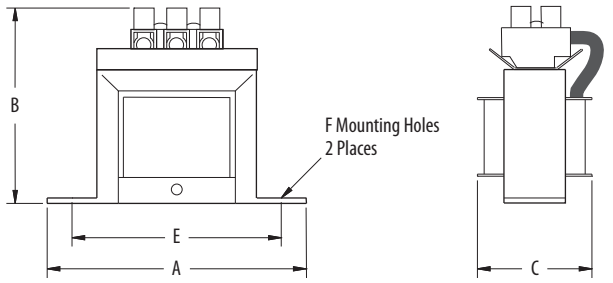

Figure 1

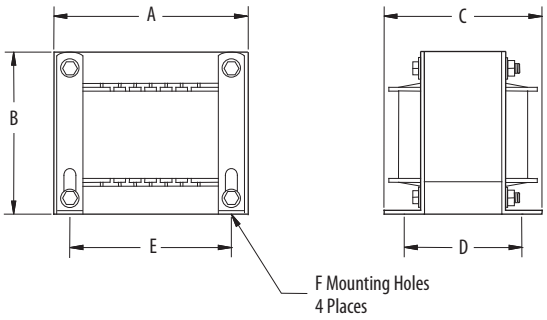

Figure 2

Catalog Number	Figure	Dimensions in mm (in.)					
		A	B	C	D	E	F
1321-DC9-2	1	95.3 (3.75)	82.6 (3.25)	50.8 (2)	(NA)	79.5 (3.13)	47.5 DIA. (0.187 DIA.)
1321-DC12-1	1	95.3 (3.75)	82.6 (3.25)	44.5 (1.75)	(NA)	79.5 (3.13)	47.5 DIA. (0.187 DIA.)
1321-DC12-2	2	96.8 (3.81)	114.3 (4.5)	71.6 (2.82)	50.8 (2)	79.5 (3.13)	5.2 x 8.3 (0.203 x 0.328)
1321-DC18-1	1	95.3 (3.75)	82.6 (3.25)	50.8 (2)	(NA)	79.5 (3.13)	47.5 DIA. (0.187 DIA.)
1321-DC18-4	2	117.6 (4.63)	133.4 (5.25)	101.6 (4)	63.5 (2.5)	95.3 (3.75)	5.2 x 8.3 (0.203 x 0.328)
1321-DC25-4	2	96.8 (3.81)	114.3 (4.5)	76.2 (3)	63.5 (2.5)	79.5 (3.13)	5.2 x 8.3 (0.203 x 0.328)
1321-DC32-1	2	96.8 (3.81)	114.3 (4.5)	84.3 (3.32)	63.5 (2.5)	79.5 (3.13)	5.2 x 8.3 (0.203 x 0.328)
1321-DC32-2	2	117.6 (4.63)	133.4 (5.25)	108.0 (4.25)	76.2 (3)	95.3 (3.75)	5.2 x 8.3 (0.203 x 0.328)
1321-DC32-3	2	117.6 (4.63)	133.4 (5.25)	133.4 (5.25)	101.6 (4)	95.3 (3.75)	5.2 x 8.3 (0.203 x 0.328)
1321-DC40-2	2	96.8 (3.81)	114.3 (4.5)	95.3 (3.75)	76.2 (3)	79.5 (3.13)	5.2 x 8.3 (0.203 x 0.328)
1321-DC40-4	2	165.1 (6.5)	166.4 (6.55)	152.4 (6)	85.9 (3.38)	134.9 (5.31)	7.1 x 13.2 (0.28 x 0.52)

Important User Information

Solid-state equipment has operational characteristics differing from those of electromechanical equipment. Safety Guidelines for the Application, Installation and Maintenance of Solid State Controls (publication SGI-1.1 available from your local Rockwell Automation sales office or online at http://www.rockwellautomation.com/literature/) describes some important differences between solid-state equipment and hard-wired electromechanical devices. Because of this difference, and also because of the wide variety of uses for solid-state equipment, all persons responsible for applying this equipment must satisfy themselves that each intended application of this equipment is acceptable.

In no event will Rockwell Automation, Inc. be responsible or liable for indirect or consequential damages resulting from the use or application of this equipment.

The examples and diagrams in this publication are included solely for illustrative purposes. Because of the many variables and requirements associated with any particular installation, Rockwell Automation, Inc. cannot assume responsibility or liability for actual use based on the examples and diagrams.

No patent liability is assumed by Rockwell Automation, Inc. with respect to use of information, circuits, equipment, or software described in this manual.

Reproduction of the contents of this manual, in whole or in part, without written permission of Rockwell Automation, Inc., is prohibited.

Documentation Feedback

Your comments will help us serve your documentation needs better. If you have any suggestions on how to improve this document, complete this form, publication RA-DU002, available at http://www.rockwellautomation.com/literature/.

Allen-Bradley, Rockwell Software, Rockwell Automation, and LISTEN. THINK. SOLVE are trademarks of Rockwell Automation, Inc.
Trademarks not belonging to Rockwell Automation are property of their respective companies.

Rockwell Otomasyon Ticaret A.Ş., Kar Plaza İş Merkezi E Blok Kat:6 34752 İçerenköy, İstanbul, Tel: +90 (216) 5698400

www.rockwellautomation.com

Power, Control and Information Solutions Headquarters

Americas: Rockwell Automation, 1201 South Second Street, Milwaukee, WI 53204-2496 USA, Tel: (1) 414.382.2000, Fax: (1) 414.382.4444
Europe/Middle East/Africa: Rockwell Automation NV, Pegasus Park, De Kleetlaan 12a, 1831 Diegem, Belgium, Tel: (32) 2 663 0600, Fax: (32) 2 663 0640
Asia Pacific: Rockwell Automation, Level 14, Core F, Cyberport 3, 100 Cyberport Road, Hong Kong, Tel: (852) 2887 4788, Fax: (852) 2508 1846

Publication 1321-TD001O-EN-P - September 2012
Supersedes Publication 1321-TD001N-EN-P - October 2008

Copyright © 2012 Rockwell Automation, Inc. All rights reserved. Printed in the U.S.A.

User Manual

Allen-Bradley

Dual-Port EtherNet/IP Communication Adapter

Catalog Number 20-COMM-ER

Allen-Bradley • Rockwell Software

Rockwell Automation

Important User Information

Solid state equipment has operational characteristics differing from those of electromechanical equipment. *Safety Guidelines for the Application, Installation and Maintenance of Solid State Controls* (Publication SGI-1.1 available from your local Rockwell Automation sales office or online at http://www.rockwellautomation.com/literature) describes some important differences between solid state equipment and hard-wired electromechanical devices. Because of this difference, and also because of the wide variety of uses for solid state equipment, all persons responsible for applying this equipment must satisfy themselves that each intended application of this equipment is acceptable.

In no event will Rockwell Automation, Inc. be responsible or liable for indirect or consequential damages resulting from the use or application of this equipment.

The examples and diagrams in this manual are included solely for illustrative purposes. Because of the many variables and requirements associated with any particular installation, Rockwell Automation, Inc. cannot assume responsibility or liability for actual use based on the examples and diagrams.

No patent liability is assumed by Rockwell Automation, Inc. with respect to use of information, circuits, equipment, or software described in this manual.

Reproduction of the contents of this manual, in whole or in part, without written permission of Rockwell Automation, Inc. is prohibited.

Throughout this manual, when necessary we use notes to make you aware of safety considerations.

WARNING: Identifies information about practices or circumstances that can cause an explosion in a hazardous environment, which may lead to personal injury or death, property damage, or economic loss.

Important: Identifies information that is critical for successful application and understanding of the product.

ATTENTION: Identifies information about practices or circumstances that can lead to personal injury or death, property damage, or economic loss. Attentions help you identify a hazard, avoid a hazard, and recognize the consequences.

Shock Hazard labels may be located on or inside the equipment (e.g., drive or motor) to alert people that dangerous voltage may be present.

Burn Hazard labels may be located on or inside the equipment (e.g., drive or motor) to alert people that surfaces may be at dangerous temperatures.

Allen-Bradley, Rockwell Software, and TechConnect are trademarks of Rockwell Automation, Inc.

Trademarks not belonging to Rockwell Automation are property of their respective companies.

Preface

About This Manual 7
Conventions Used in This Manual 7
Rockwell Automation Support 8
Additional Resources 8

Chapter 1

Getting Started

Components 11
Features 12
Compatible Products 13
Required Equipment 13
Equipment Shipped with the Adapter 13
User-Supplied Equipment 13
Safety Precautions 15
Quick Start 16

Chapter 2

Installing the Adapter

EMC Conformance 17
Preparing for an Installation 18
Setting the Web Pages Switch 19
Connecting the Adapter to the Drive or SMC 20
Connecting the Adapter to the Network 23
Applying Power 24
Start-Up Status Indications 24
Configuring and Verifying Key Drive Parameters 26
Commissioning the Adapter 26

Chapter 3

Configuring the Adapter

Configuration Tools 27
Using the PowerFlex 7-Class HIM 28
Using an LED HIM 28
Using an LCD HIM 28
Using BOOTP 29
Configure the Adapter Using a BOOTP Server 29
Setting the IP Address, Subnet Mask, and Gateway Address 32
Disable the BOOTP Feature 32
Set an IP Address Using Parameters 32
Set a Subnet Mask Using Parameters 33
Set a Gateway Address Using Parameters 33
Setting the Data Rate 34
Setting the I/O Configuration 35
Selecting Master-Slave or Peer-to-Peer 36
Setting a Master-Slave Hierarchy 36
Setting the Adapter to Transmit Peer-to-Peer Data 37
Setting the Adapter to Receive Peer-to-Peer Data 38
Setting the Reference Adjustment 41
Setting a Fault Action 41

Changing the Fault Action 42
Setting the Fault Configuration Parameters 42
Setting Web Access Control 42
Resetting the Adapter 43
Viewing the Adapter Status Using Parameters 44
Updating the Adapter Firmware 44

Chapter 4

Configuring the I/O

Using RSLinx Classic Software 47
ControlLogix Controller Example 48
Adding the Bridge to the I/O Configuration 49
Using RSLogix 5000 Device Add-on Profiles, Version 16.00 or Later 51
Using the RSLogix 5000 Classic Profile, Versions 13.00...15.00 . . . 60
Using the RSLogix 5000 Generic Profile, All Versions 62
Limitations Using a MicroLogix 1100/1400 Controller 68
MicroLogix 1100/1400 Controller Example 68
Configuring Parameters for Network I/O 69
Creating RSLogix 500 Project, Version 7.00 or Later 70

Chapter 5

Using the I/O

About I/O Messaging 79
Understanding the I/O Image 80
ControlLogix Controller Image 80
MicroLogix 1100/1400 Controller Image 82
Using Logic Command/Status 84
Using Reference/Feedback 84
PowerFlex 7-Class Drives 85
Using Datalinks 86
Rules for Using Datalinks 86
Using 16-Bit Datalinks to Read/Write 32-Bit Parameters 86
Example Ladder Logic Program Information 87
Functions of the Example Programs 87
Logic Command/Status Words 88
ControlLogix Controller Example 88
Creating Ladder Logic Using the RSLogix 5000 Device Add-on Profiles, Version 16.00 or Later 88
Creating Ladder Logic Using the RSLogix 5000 Classic Profile, Versions 1300...15.00 89
Creating Ladder Logic Using the RSLogix 5000 Generic Profile, All Versions 90
MicroLogix 1100/1400 Controller Example 96
Drive and Adapter Parameter Settings 96
Understanding Controller Data Table Addresses 97

Chapter 6

Using Explicit Messaging

About Explicit Messaging 106
Performing Explicit Messages 106
ControlLogix Controller Examples 108
Explicit Messaging Using RSLogix 5000 Software, Version 15.00 or Later 108
Explicit Messaging Using RSLogix 5000 Software, All Versions. . 121
MicroLogix 1100/1400 Controller Examples 124
MicroLogix 1100/1400 Controller Explicit Messaging Using the Read/Write Parameter Service 125
MicroLogix 1100/1400 Controller Explicit Messaging Using the Generic Get/Set Attribute Service 130

Chapter 7

Troubleshooting

Understanding the Status Indicators 143
Port Status Indicator 144
Network Status Indicator 145
Link (LS1, LS2) Status Indicator 145
NET A Status Indicator 145
Hardware Reset via Node Switches 146
Viewing Adapter Diagnostic Items. 146
Viewing and Clearing Events 149

Chapter 8

Viewing the Adapter Web Pages

Accessing the Adapter Web Home Page. 153
Viewing the Web Pages 153
Title Bar on Adapter Web Pages 154
Navigation Pane on Adapter Web Pages 155
Process Display Home Page 156
Browse DPI Device Folder 156
Diagnostics Web Page 157
Diagnostic Overview link 157
Network Setting Link. 158
EtherNet/IP Statistics Link 159
Ring Statistics link. 159
Crash Display Link 160
Heap Statistics Display link 160
Administrative Web Pages 160
Device Identity Link 161
Network Configuration Link 161
Email Configuration Link. 162
Password Configuration 165

Chapter 9

Using the Adapter in a DPI External Comms Kit (20-XCOMM-DC-BASE)

Installing the Adapter 167

Appendix A

Specifications

Communications. 169
Electrical 169
Mechanical 170
Environmental 170
Regulatory Compliance 170

Appendix B

Adapter Parameters

About Parameter Numbers. 171
Parameter List 171

Appendix C

EtherNet/IP Objects

Supported Data Types 182
Identity Object. 182
Assembly Object 183
Register Object. 184
Parameter Object 185
Parameter Group Object. 188
Device Level Ring Object 189
Quality of Service Object 190
PCCC Object 190
DPI Device Object 196
DPI Parameter Object 198
DPI Fault Object. 204
DPI Alarm Object. 206
DPI Diagnostic Object 207
DPI Time Object 209
TCP/IP Interface Object 211
Ethernet Link Object. 213

Appendix D

Logic Command/Status Words

PowerFlex 70/70EC, PowerFlex 700/700VC, and PowerFlex 700H Drives 215
Logic Command Word 215
Logic Status Word. 216
PowerFlex 700S Drives 217
Logic Command Word (Phase II Control) 217
Logic Status Word (Phase II Control) 218
SMC Flex Controllers /SMC-50 Controllers 219
Logic Status Word. 219
Logic Command Word (Control) 220

Glossary. 221

Index 231

Preface

About This Manual

Topic	Page
Conventions Used in This Manual	7
Rockwell Automation Support	7
Additional Resources	8

This manual provides information about the adapter and using it with PowerFlex 7-Class (Architecture-Class) drives or Bulletin 150 SMC Soft Starters. The adapter can be used with other products that support a DPI™ adapter, such as the DPI External Comms Kit (20-XCOMM-DC-BASE). See the documentation for your product for specific information about how it works with the adapter.

Conventions Used in This Manual

The following conventions are used throughout this manual:

- Parameter names are shown in the format **Parameter xx - [*]**. The xx represents the parameter number. The * represents the parameter name—for example **Parameter 01 - [DPI Port]**.
- Menu commands are shown in bold type face and follow the format **Menu > Command**. For example, if you read 'Select **File > Open**', you should click the **File** menu and then click the **Open** command.
- The firmware revision number (FRN) is displayed as FRN *X.xxx*, where '*X*' is the major revision number and '*xxx*' is the minor revision number.
- The screen images in this manual resulted from using the following software:
  - RSLinx® Classic software, version 2.51
  - RSLogix 5000 software, version 16

    Different versions of the software may have screens that vary in appearance, and differences in procedures.

Rockwell Automation Support

Rockwell Automation offers support services worldwide, with over 75 sales and support offices, over 500 authorized distributors, and over 250 authorized systems integrators located through the United States alone. In addition, Rockwell Automation representatives are in every major country in the world.

Local Product Support

Contact your local Rockwell Automation representative for the following:

- Sales and order support
- Product technical training

- Warranty support
- Support service agreements

Technical Product Assistance

For technical assistance, please review the information in Chapter 7, Troubleshooting, first. If you still have problems, then access the Allen-Bradley Technical Support website at www.ab.com/support/abdrives or contact Rockwell Automation.

Additional Resources

These documents contain additional information concerning related products from Rockwell Automation.

Resource	Description
Industrial Automation wiring and grounding guidelines, publication 1770-4.1	Provides general guidelines for installing a Rockwell Automation industrial system.
Product certifications website, http://www.ab.com	Provides declarations of conformity, certificates, and other certification details.
Industrial Security Best Practices, publication SECUR-AT001	Provides further information and guidelines on product and system security.
PowerFlex 7-Class DPI (Drive Peripheral Interface) Network Communication Adapter Installation Instructions, publication 20COMM-IN004	Information on the installation of PowerFlex® 20-COMM-x Network Communication Adapters.
EtherNet/IP Media Planning and Installation Manual, ODVA publication 148 (1)	Information on the planning, installation, and techniques used to implement an EtherNet/IP network.
EtherNet/IP Network Infrastructure Guidelines, ODVA publication 35 (1)	
Ethernet Design Considerations Reference Manual, publication ENET-RM002	
Connected Components Workbench website http://www.ab.com/support/abdrives/webupdate/software.html, and online help	Information on the Connected Components Workbench™ software tool—and includes a link for **free** software download.
PowerFlex 20-HIM-A3/-A5/-C3S/-C5S HIM Quick Reference, publication 20HIM-QR001	Information on the use of the PowerFlex 20-HIM-A3, 20-HIM-A5, 20-HIM-C3S, and 20-HIM-C5S HIMs.
PowerFlex 20-HIM-A6/-C6S HIM (Human Interface Module) User Manual, publication 20HIM-UM001	Information on the installation and use of the PowerFlex 20-HIM-A6 and 20-HIM-C6S HIMs.
PowerFlex 70 User Manual, publication 20A-UM001 PowerFlex 70/700 Reference Manual, publication PFLEX-RM001 PowerFlex 70EC/700VC Reference Manual, publication PFLEX-RM004	Information on installing, programming, and technical data of PowerFlex 70 and PowerFlex 70EC drives.
PowerFlex 700 Series A User Manual, publication 20B-UM001 PowerFlex 700 Series B User Manual, publication 20B-UM002 PowerFlex 70/700 Reference Manual, publication PFLEX-RM001 PowerFlex 70EC/700VC Reference Manual, publication PFLEX-RM004	Information on installing, programming, and technical data of PowerFlex 700/700VC Series A and PowerFlex 700VC Series B drives.
PowerFlex 700H Installation Instructions, publication PFLEX-IN006 PowerFlex 700H Programming Manual, publication 20C-PM001	Information on installing, programming, and technical data of PowerFlex 700H drives.

Resource	Description
PowerFlex 700S w/Phase I Control Installation Manual (Frames 1…6), publication 20D-IN024 PowerFlex 700S w/Phase I Control Installation Manual (Frames 9 and 10), publication PFLEX-IN006 PowerFlex 700S w/Phase I Control User Manual (All Frame Sizes), publication 20D-UM001 PowerFlex 700S w/Phase I Control Reference Manual, publication PFLEX-RM002 PowerFlex 700S w/Phase II Control Installation Manual (Frames 1…6), publication 20D-IN024 PowerFlex 700S w/Phase II Control Installation Manual (Frames 9…14), publication PFLEX-IN006 PowerFlex 700S w/Phase II Control Programming Manual (All Frame Sizes), publication 20D-PM001 PowerFlex 700S w/Phase II Control Reference Manual, publication PFLEX-RM003	Information on installing, programming, and technical data of PowerFlex 700S drives.
PowerFlex 700L User Manual, publication 20L-UM001	Information on installing, programming, and technical data of PowerFlex 700L Liquid-Cooled AC drives.
SMC Flex Smart Motor Controller User Manual, publication 150-UM008	Information on installing, programming, and technical data of SMC Flex State Smart Motor Controller.
SMC-50 Solid-State Smart Motor Controller User Manual, publication 150-UM011	Information on installing, programming, and technical data of SMC-50 Solid-State Smart Motor Controller.
PowerFlex Digital DC Drive User Manual, publication 20P-UM001	Information on installing, programming, and technical data of PowerFlex Digital DC drives.
Getting Results with RSLinx Guide, publication LINX-GR001and online help (1)	Information on using RSLinx Classic software.
RSLogix Emulate 5/500 Getting Results Guide, publication EMULAT-GR002 and online help	Information on how to install and navigate the RSLogix Emulate software for ladder logic programming with Allen-Bradley® PLC-5® and SLC™ 500 processors.
RSLogix 500 Getting Results Guide, publication LG500-GR002 and online help (1)	Information on using RSLogix 500 software tool.
RSLogix 5000 PIDE Autotuner Getting Results Guide, publication PIDE-GR001 and online help (1)	Information on using RSLogix 5000 software tool.
EtherNet/IP Modules in Logix5000 Control Systems User Manual, publication ENET-UM001	Information on using the ControlLogix® 1756-ENBT or 1756-EN2T EtherNet/IP communication modules with your Logix5000 controller and communicating with various devices on the EtherNet/IP network.
Enhanced and Ethernet PLC-5 Programmable Controllers User Manual, publication 1785-UM012	Information to help design, operate and maintain an Enhanced and Ethernet PLC-5 programmable controller system.
MicroLogix 1100 Programmable Controllers User Manual, publication 1763-UM001 MicroLogix 1400 Programmable Controllers User Manual, publication 1766-UM001	Information to install, wire, and troubleshoot the MicroLogix™ 1100 and MicroLogix 1400 controllers respectively.
Web Updates http://www.ab.com/support/abdrives/webupdate/	Flash Update Files, Product Help Files, Control Bar Files, GSD Files, EDS File links, DriveTools SP / Drive AOP Database Files, and other downloads to keep your Allen-Bradley brand drive products up to date

(1) Use this link to the ODVA EtherNet/IP library: http://odva.org/Home/ODVATECHNOLOGIES/EtherNetIP/EtherNetIPLibrary/tabid/76/Default.aspx

Documentation can be obtained online at http://literature.rockwellautomation.com. To order paper copies of technical documentation, contact your local Rockwell Automation distributor or sales representative.

To find your local Rockwell Automation distributor or sales representative, visit http://www.rockwellautomation.com/locations.

For information such as firmware updates or answers to drive-related questions, go to the Drives Service & Support web site at http://www.ab.com/support/abdrives and click on the Downloads or Knowledgebase link.

Notes:

Getting Started

The adapter is intended for installation in a PowerFlex 7-Class drive or Bulletin 150 SMC soft starter and is used for network communication.

Topic	Page
Components	11
Features	12
Compatible Products	13
Required Equipment	13
Safety Precautions	15
Quick Start	16

Components

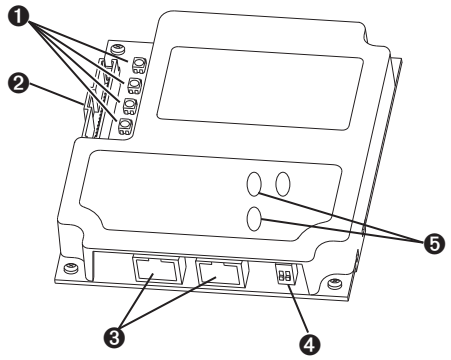

Item	Part	Description
❶	Status Indicators	Four status indicators that indicate the status of the DPI, the adapter, and network connection. See Chapter 7, Troubleshooting.
❷	DPI Connector	A 20-pin, single-row shrouded male header. An Internal Interface cable is connected to this connector and a connector on the drive.
❸	Ethernet Connector	RJ-45 connector for the Ethernet network cable. The connector is CAT-5 compliant to ensure reliable data transfer on 100Base-TX Ethernet connections.
❹	Web Pages Switch (SW4)	Enables or disables the adapter web pages. See Setting the Web Pages Switch on page 19.
❺	Address/mode switches	Set IP address or DHCP/BootP mode.

Features

The features of the adapter include the following:

- Typical mounting in a PowerFlex 7-Class drive or SMC soft starter.
- Captive screws to secure and ground the adapter to the drive.
- Compatibility with various configuration tools to configure the adapter and connected host drive, including the following tools:
  - PowerFlex HIM (Human Interface Module) on the drive or SMC, if available
  - Connected Components Workbench software, version 1.02 or later
  - DriveExplorer software, version 2.01 or later
  - DriveExecutive software, version 3.01 or later
  - RSLogix5000 version16 and later with Drives Add-on Profile version 4.05 and later

  Additionally, you can use a BOOTP/DHCP server to configure the network address for the adapter.
- Status indicators that report the status of the drive communications, the adapter, and network. They are visible when the drive cover is open or closed.
- Parameter-configured I/O (Logic Command/Reference and up to four pairs of Datalinks) to accommodate application requirements.
- Explicit Messaging support.
- Master-Slave or Peer-to-Peer hierarchy that can be configured to transmit data to and from either a controller or another PowerFlex drive or SMC on the network.
- User-defined fault actions to determine how the adapter and connected PowerFlex drive respond to the following:
  - I/O messaging communication disruptions (Comm Flt Action)
  - Controllers in idle mode (Idle Flt Action)
- Web pages, viewed by using a web browser, that show information about the adapter, its connected host drive, and DPI devices connected to the drive.
- Configurable e-mail messaging to desired addresses when selected drive faults occur and/or are cleared, and/or when the adapter takes a communication or idle fault action.
- Access to any PowerFlex drive or SMC and its connected peripherals on the network to which the adapter is connected.
- Device Level Ring (DLR) or Star Topology support with Quality of Service (QoS) support.

Compatible Products

At the time of publication, the adapter is compatible with the following products:

- PowerFlex 70/70EC drives
- PowerFlex 700/700VC drives
- PowerFlex 700H drives
- PowerFlex 700S drives
- PowerFlex 7000/7000-2 drives
- PowerFlex 700L drives
- PowerFlex Digital DC drives
- DPI External Comms Kit
- SMC™-50
- SMC™ Flex

Note: The adapter is not compatible with PowerFlex 750 series drives.

Required Equipment

Some of the equipment that is required for use with the adapter is shipped with the adapter, but some you must supply yourself.

Equipment Shipped with the Adapter

When you unpack the adapter, verify that the package includes the following:

- ❑ One 20-COMM-ER EtherNet/IP adapter
- ❑ One 2.54 cm (1 in.) long and one 15.24 cm (6 in.) long Internal Interface cable (only one cable is needed to connect the adapter to the drive; for which cable to use, see Figure 3 - on page 2-21)
- ❑ One PowerFlex 7-Class DPI (Drive Peripheral Interface) Network Communication Adapter Installation Instructions, publication 20COMM-IN004
- ❑ One LED Identification Label for use with Bulletin 150 SMC Flex and Bulletin 700 PowerFlex drives

User-Supplied Equipment

To install and configure the adapter, you must supply the following:

- ❑ A small flathead screwdriver
- ❑ Ethernet cable (for details, see the EtherNet/IP Media Planning and Installation Manual, ODVA publication 148 available on the ODVA website at http://odva.org/Home/ODVATECHNOLOGIES/EtherNetIP/EtherNetIPLibrary/tabid/76/Default.aspx)
- ❑ Ethernet switch (for details, see the Ethernet Design Considerations Reference Manual, publication ENET-RM002)
- ❑ Configuration tool, such as the following:
  - PowerFlex 20-HIM-xx HIM

- Connected Components Workbench software, version 1.02 or later

  Connected Components Workbench is the recommended stand-alone software tool for use with PowerFlex drives. You can obtain a **free copy** by:

  - Internet download at http://www.ab.com/support/abdrives/webupdate/software.html
  - Requesting a DVD at http://www.ab.com/onecontact/controllers/micro800/

  Your local distributor may also have copies of the DVD available.

  Connected Components Workbench software cannot be used to configure SCANport-based drives or Bulletin 160 drives.

- DriveExplorer software, version 2.01 or later

  This software tool has been discontinued and is now available as **freeware** at http://www.ab.com/support/abdrives/webupdate/software.html. There are no plans to provide future updates to this tool and the download is being provided 'as-is' for users that lost their DriveExplorer CD, or need to configure legacy products not supported by Connected Components Workbench software.

- DriveExecutive software, version 3.01 or later

  A Lite version of DriveExecutive software ships with RSLogix 5000, RSNetWorx MD, FactoryTalk AssetCentre, and ItelliCENTER software. All other versions are purchasable items:

  - 9303-4DTE01ENE Drive Executive software
  - 9303-4DTS01ENE DriveTools SP Suite (includes DriveExecutive and DriveObserver software)
  - 9303-4DTE2S01ENE DriveExecutive software upgrade to DriveTools SP Suite (adds DriveObserver software)

  DriveExecutive software updates (patches, and so forth) can be obtained at http://www.ab.com/support/abdrives/webupdate/software.html. It is highly recommended that you periodically check for and install the latest update.

- BOOTP server, version 2.1 or higher, for network setup only

❑ Controller configuration software, such as RSLogix 5/500/5000

❑ A computer connection to the EtherNet/IP network

Safety Precautions

Please read the following safety precautions carefully.

ATTENTION: Risk of injury or death exists. The PowerFlex drive may contain high voltages that can cause injury or death. Remove all power from the PowerFlex drive or SMC, and then verify power has been discharged before installing or removing an adapter.

ATTENTION: Risk of injury or equipment damage exists. Only personnel familiar with drive and power products and the associated machinery should plan or implement the installation, start up, configuration, and subsequent maintenance of the product using an adapter. Failure to comply may result in injury and/or equipment damage.

ATTENTION: Risk of equipment damage exists. The adapter contains electrostatic discharge (ESD) sensitive parts that can be damaged if you do not follow ESD control procedures. Static control precautions are required when handling the adapter. If you are unfamiliar with static control procedures, see Guarding Against Electrostatic Damage, publication 8000-4.5.2.

ATTENTION: Risk of injury or equipment damage exists. If the adapter is transmitting control I/O to the drive, the drive may fault when you reset the adapter. Determine how your drive will respond before resetting an adapter.

ATTENTION: Risk of injury or equipment damage exists. **Parameters 21 - [Comm Flt Action]**, **24 - [Idle Flt Action]**, and **43 - [Peer Flt Action]** let you determine the action of the adapter and connected drive if communication is disrupted or the controller is idle. By default, these parameters fault the drive. You may configure these parameters so that the drive continues to run, however, precautions should be taken to ensure that the settings of these parameters do not create a risk of injury or equipment damage. When commissioning the drive, verify that your system responds correctly to various situations (for example, a disconnected cable or a controller in idle state).

ATTENTION: Risk of injury or equipment damage exists. When a system is configured for the first time, there may be unintended or incorrect machine motion. Disconnect the motor from the machine or process during initial system testing.

ATTENTION: Risk of injury or equipment damage exists. The examples in this publication are intended solely for purposes of example. There are many variables and requirements with any application. Rockwell Automation, Inc. does not assume responsibility or liability (to include intellectual property liability) for actual use of the examples shown in this publication.

Quick Start

This section is provided to help experienced users quickly start using the adapter. If you are unsure how to complete a step, refer to the referenced chapter.

Step	Action	See
1	Review the safety precautions for the drive or SMC	Drive or SMC User Manual
2	Review the safety precautions for the adapter	Throughout this manual
3	Verify that the power control device is properly installed.	Drive or SMC User Manual
4	Install the adapter. a. Verify that the power control device is not powered. b. Connect the adapter to the device with the Internal Interface cable. c. Use the captive screws to secure and ground the adapter to the device. d. Connect the adapter to the network with an Ethernet cable. **NOTE:** When installing the adapter in the DPI External Comms Kit—see the 20-XCOMM-DC-BASE Installation Instructions, publication 20COMM-IN001, supplied with the kit.	PowerFlex 7-Class DPI Network Communication Adapter Installation Instructions, publication 20COMM-IN004, and Chapter 2, Installing the Adapter
5	Apply power to the adapter. a. Verify that the adapter is installed correctly. b. The adapter receives power from the drive or SMC. Apply power to the device. The status indicators should be green. If they flash red, there is a problem. See Chapter 7, Troubleshooting. c. Configure and verify key drive or SMC parameters.	Chapter 2, Installing the Adapter
6	Configure the adapter for your application. Set adapter parameters for the following functions as required by your application: • IP address, subnet mask, and gateway address • Data rate • I/O configuration • Master-Slave or Peer-to-Peer hierarchy • Fault actions	Chapter 3, Configuring the Adapter
7	Configure the controller to communicate with the adapter. Use a controller configuration tool, such as RSLogix software, to configure the master on the network to recognize the adapter and drive or SMC.	Chapter 4, Configuring the I/O
8	Create a ladder logic program. Use a controller configuration tool, such as RSLogix software, to create a ladder logic program that enables you to do the following: • Control the connected device, via the adapter, by using I/O. • Monitor or configure the device or SMC by using explicit messages.	Chapter 5, Using the I/O Chapter 6, Using Explicit Messaging

Installing the Adapter

This chapter provides instructions for installing the adapter in a PowerFlex 7-Class drive.

Topic	Page
Preparing for an Installation	18
Setting the Web Pages Switch	19
Connecting the Adapter to the Drive or SMC	20
Connecting the Adapter to the Network	23
Applying Power	24
Commissioning the Adapter	26

EMC Conformance

For all PowerFlex 70 and 700 drive installations that require CE conformance per EN61800-3, a ferrite core must be installed on each EtherNet/IP cable connected to the drive.

These ferrites are not required for installation on SMC products.

A ferrite core such as FAIR-RITE part number 2643803802 needs to be installed according to the following diagram.

Note: the cable is wrapped 4 times around each core.

Figure 1 - Ferrite Core Installation

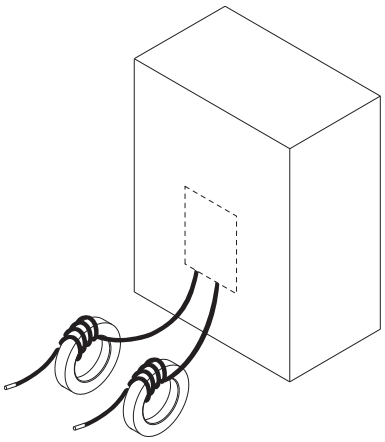

Preparing for an Installation

Before installing the adapter, do the following:

- Make sure the Ethernet switch is the correct type. A 'managed' switch that supports IGMP snooping is usually recommended. An 'unmanaged' switch can be used instead if RSLogix 5000 software, version 18.00 or later, is used and all devices on the network are configured for 'unicast' I/O. For more details, see the following documents:
  - EtherNet/IP Media Planning and Installation Manual, ODVA publication 148
  - EtherNet/IP Network Infrastructure Guidelines, ODVA publication 35
  - Ethernet Design Considerations Reference Manual, publication ENET-RM002

- Understand IGMP Snooping/Ethernet Switches

  The 20-COMM-ER adapter is a multicast device. In most situations, an IGMP snooping (managed) switch is required. If more than one or two 20-COMM-ER adapters are connected to the switch, a managed switch is required—otherwise the drive may fault on a DPI Port x network loss. The 20-COMM-ER, RSLogix 5000 software, version 18.00 or later, and a ControlLogix or CompactLogix controller will support unicast. Unicast setup is required when adding the drive to the I/O. When all adapters are set up as unicast devices, then an IGMP snooping (managed) switch is not needed.

  Much of EtherNet/IP implicit (I/O) messaging uses IP multicast to distribute I/O control data, which is consistent with the CIP producer/consumer model. Historically, most switches have treated multicast packets the same as broadcast packets. That is, all multicast packets are re-transmitted to all ports.

  IGMP snooping constrains the flooding of multicast traffic by dynamically configuring switch ports so that multicast traffic is forwarded only to ports associated with a particular IP multicast group.

  Switches that support IGMP snooping (managed switches) 'learn' which ports have devices that are part of a particular multicast group and only forward the multicast packets to the ports that are part of the multicast group.

  Be careful as to what level of support a switch has of IGMP snooping. Some layer 2 switches that support IGMP snooping require a router (which could be a layer 3 switch) to send out IGMP polls to learn what devices are part of the multicast group. Some layer 2 switches can use IGMP snooping without a router sending polls. If your control system is a standalone network or is required to continue performing if the router is out of service, make sure the switch you are using supports IGMP snooping without a router being present.

- See Appendix A for the number of CIP connections supported by the 20-COMM-ER adapter.
- Verify that you have all required equipment. See Required Equipment on page 13.

Setting the Web Pages Switch

To use the adapter web pages, the Web Pages Switch must be set to its 'Enable Web' position. For information to enable or disable web pages for an adapter, see Setting Web Access Control on page 42.

ATTENTION: Risk of equipment damage exists. The adapter contains electrostatic discharge (ESD) sensitive parts that can be damaged if you do not follow ESD control procedures. Static control precautions are required when handling the adapter. If you are unfamiliar with static control procedures, see Guarding Against Electrostatic Damage, publication 8000-4.5.2.

Important: A new switch setting is recognized only when power is applied to the adapter, or the adapter is reset. If you change a switch setting, cycle power or reset the adapter to apply the change.

Set the Web Pages Switch (SW4 in Figure 2) to enable or disable the adapter web pages. By default, the adapter web pages are disabled. For complete details on adapter web pages, see Viewing the Adapter Web Pages on page 153.

Figure 2 - Setting Web Pages Switch (only Series B Adapter)

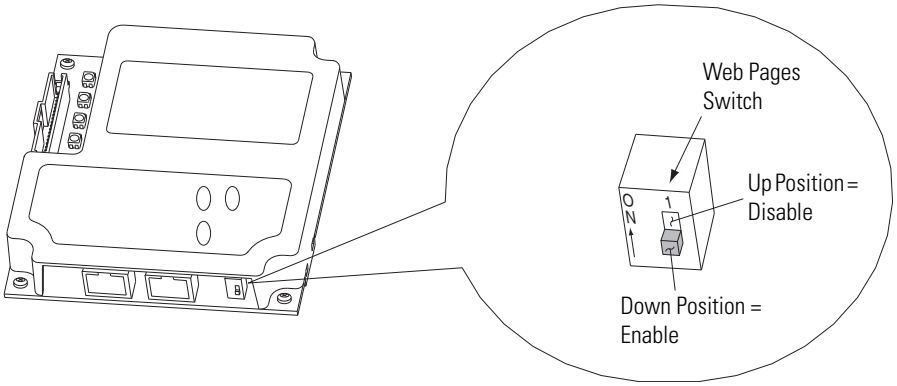

Setting	Description
Down (OFF) position	Web server enabled
Up (ON) position	Web server disabled (as shipped)

Connecting the Adapter to the Drive or SMC

ATTENTION: Risk of injury or death exists. The PowerFlex drive or SMC may contain high voltages that can cause injury or death. Remove **ALL** power from the drive or SMC, and then verify power has been discharged before installing or removing the adapter.

1. Remove **ALL** power from the drive or SMC.
2. Use static control precautions.
3. Remove the drive or SMC cover or open the drive door.
4. Connect the Internal Interface cable to the DPI port on the drive and then to the DPI connector on the adapter (see Figure 3).
5. Secure and ground the adapter to the drive or SMC (see Figure 4) by doing the following:
   - On a PowerFlex 70 drive, fold the Internal Interface cable behind the adapter and mount the adapter on the drive using the four captive screws.
   - On an SMC Flex, put the wire lug between the mounting screw and 20-COMM-ER board

Important: Tighten all screws to properly ground the adapter. Recommended torque is 0.9 N•m (8.0 lb•in).

Figure 3 - DPI Ports and Internal Interface Cables

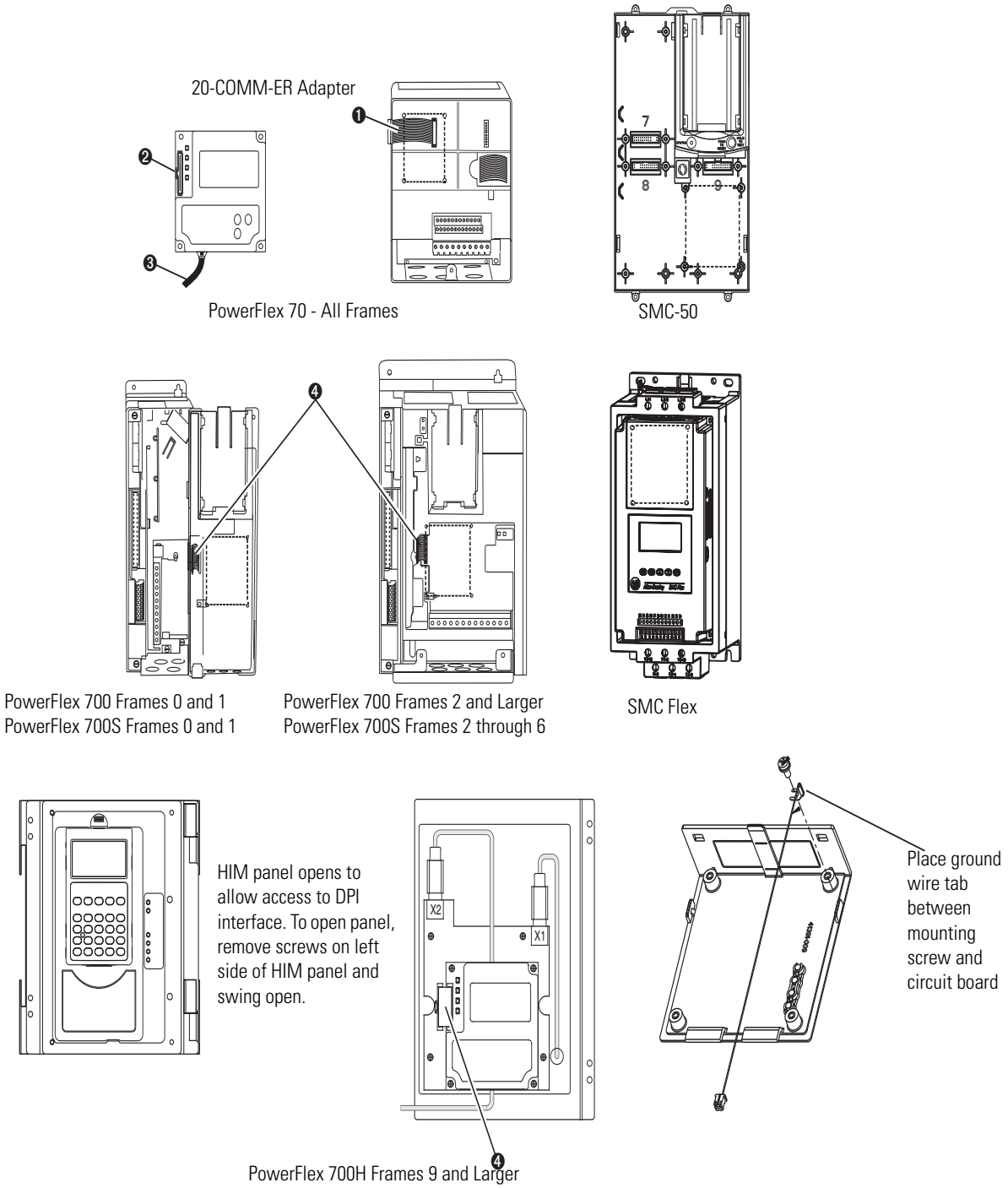

Item	Description
❶	15.24 cm (6 in.) Internal Interface cable
❷	DPI Connector
❸	Ethernet cable
❹	2.54 cm (1 in.) Internal Interface cable

Figure 4 - Mounting and Grounding the Adapter

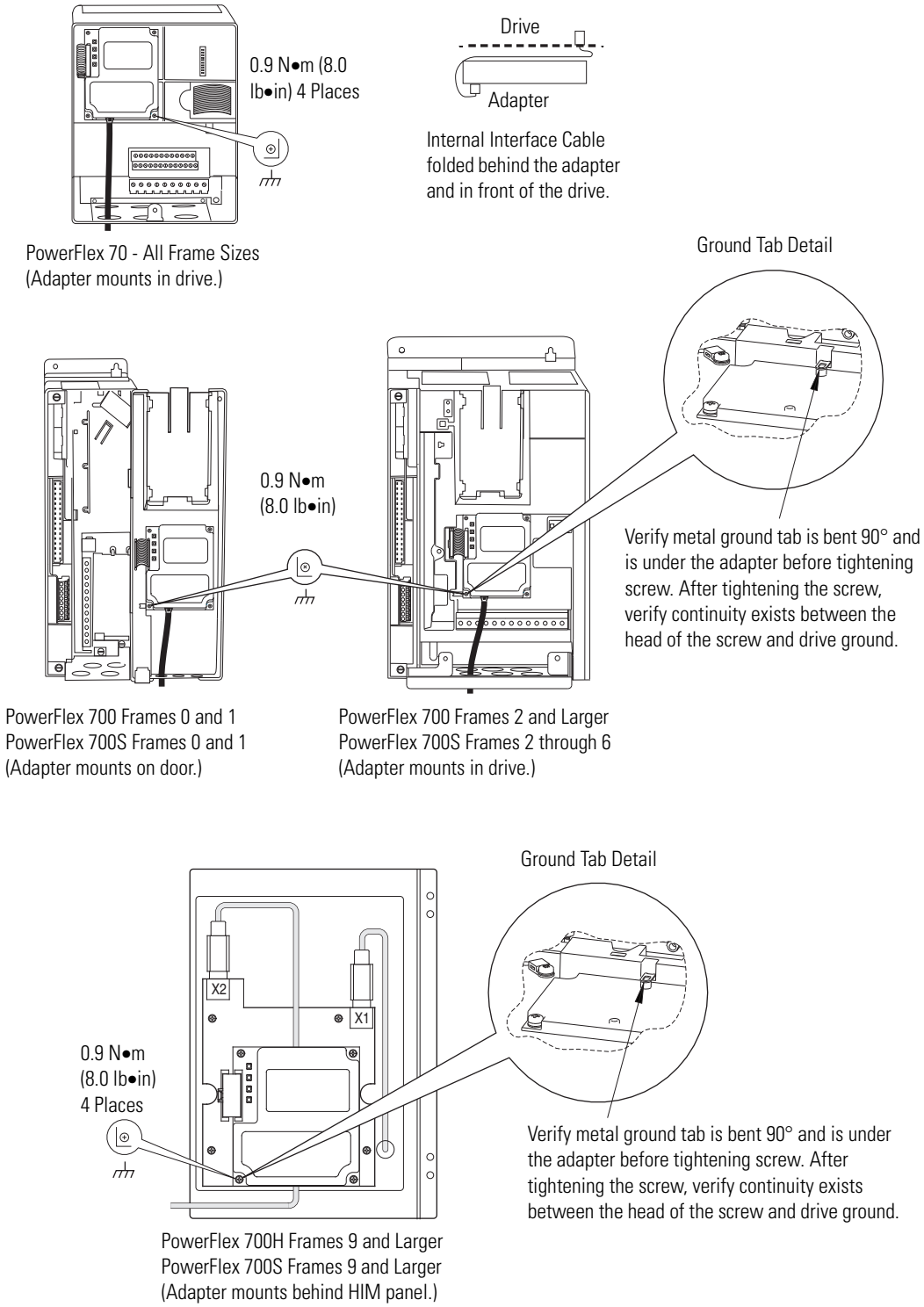

Connecting the Adapter to the Network

ATTENTION: Risk of injury or death exists. The PowerFlex drive may contain high voltages that can cause injury or death. Remove power from the drive, and then verify power has been discharged before installing or removing the adapter.

1. Remove power from the drive.
2. Use static control precautions.
3. Connect one end of an Ethernet cable to the network. See Figure 5 for an example of wiring to an EtherNet/IP network.

Figure 5 - Connecting the Ethernet Cable in a Linear Topology Network

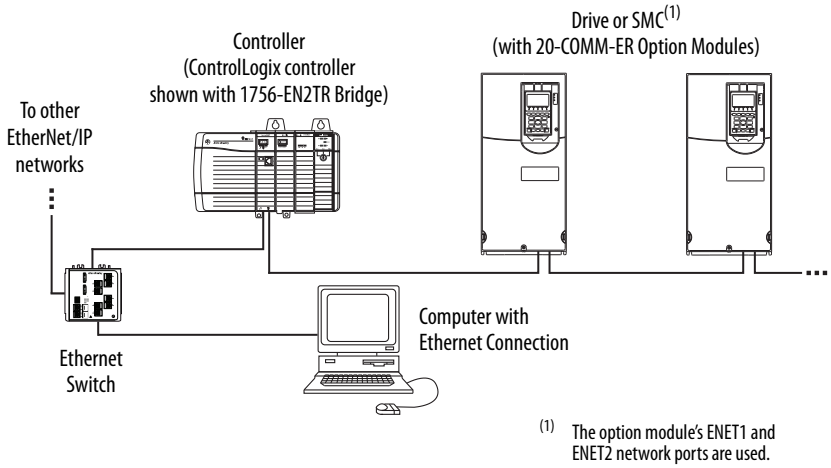

Figure 6 - Connecting the Ethernet Cable in a DLR Topology Network

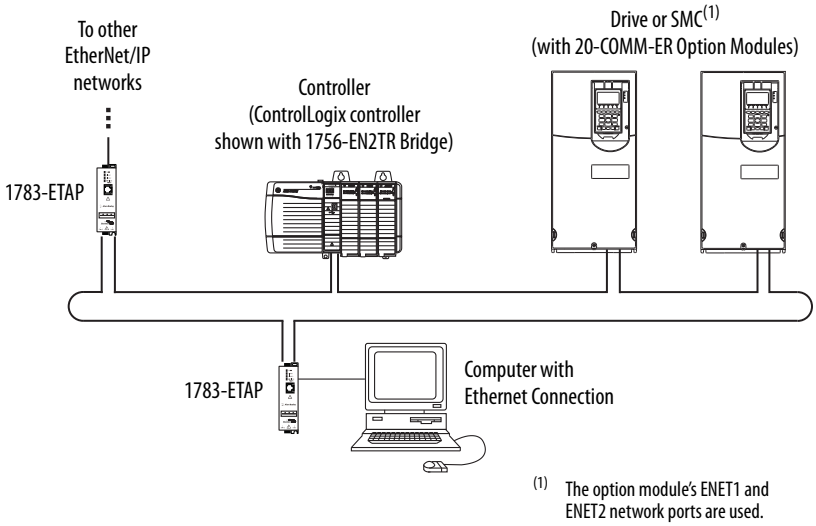

4. For Linear or DLR Network Topology, route the other end of the Ethernet cable from the network through the bottom of the first drive, and insert its cable plug into the option module ENET1 network port.

To connect to the second drive, attach another Ethernet cable between the first drive's option module ENET2 network port and the second drive's option module ENET1 network port.

To connect additional drives, repeat these daisy-chain connections in the same way.

5. Route the other end of the Ethernet cable through the bottom of the PowerFlex drive (Figure 4) and insert its Ethernet cable plug into the mating adapter receptacle.

Applying Power

ATTENTION: Risk of equipment damage, injury, or death exists. Unpredictable operation may occur if you fail to verify that parameter settings are compatible with your application. Verify that settings are compatible with your application before applying power to the drive.

Install the device cover or close the drive door, and apply power to the device. The adapter receives its power from the connected device. When you apply power to the adapter for the first time, its topmost PORT status indicator should be steady green or flashing green after an initialization. If it is red, there is a problem. See Chapter 7, Troubleshooting.

Start-Up Status Indications

After power has been applied, the status indicators for the device and communications adapter can be viewed on the front of the device (Figure 7). Possible start-up status indications are shown in Table 1.

Figure 7 - Drive and Adapter Status Indicators (location will vary by device)

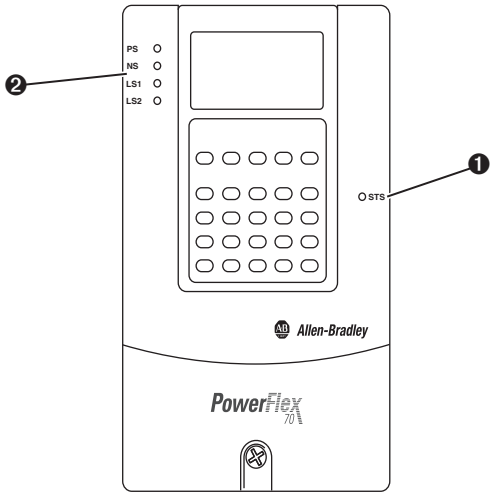

Table 1 - Drive and Adapter Start-Up Status Indications

Item	Name	Color	State	Description
Drive STS Indicator				
❶	STS (Status) refer to drive or SMC manual for status indication information)	Green	Flashing	Device ready but not running, and no faults are present.
			Steady	Device running, no faults are present.
		Yellow	Flashing, device stopped	An inhibit condition exists – the drive cannot be started. Check device Parameter 214 - [Start Inhibits].
			Flashing, device running	An intermittent type 1 alarm condition is occurring. Check device Parameter 211 - [Drive Alarm 1].
			Steady, device running	A continuous type 1 alarm condition exists. Check device Parameter 211 - [Drive Alarm 1].
		Red	Flashing	A fault has occurred.
			Steady	A non-resettable fault has occurred.
Adapter Status Indicators				
❷	PS	Off	Steady	No power
		Orange	Flashing	Requesting DPI I/O Connections
			Steady	Peripheral is Connected to an incompatible product or no DPI ping events are detected.
		Green	Flashing	Normal Operation (DPI connected) - No I/O, or PLC in Program
			Steady	Normal Operation (DPI connected) - I/O Operational
		Red	Flashing	DPI Problem, Bad CRC of Adapter Parameters or Flash Program
			Steady	DPI Failure or Failed power-on diagnostic test (hardware failure)
		Green/ Red	Flashing	Flash update in progress
	NS	Off	Steady	No power OR no IP Address
		Green	Flashing	An IP address is configured, but no CIP connections are established, and an Exclusive Owner connection has not timed out
			Steady	At least one CIP connection (any transport class) is established, and an Exclusive Owner connection has not timed out
		Red	Flashing	Connection has timed out see the “The EtherNet Adaptation of CIP” Specification sections 9-4.4 for detailed behavior description
			Steady	Duplicate IP Address detected
		Orange	Steady	Adapter Failure (used in conjunction with PS orange)
		Green/ Red	Flashing	Self-test on power up
	LS1	Off	Steady	No Network Activity
		Green	Flashing	Network activity at 100 Mbps
		Yellow	Flashing	Network activity at 10 Mbps
	LS2	Off	Steady	No Network Activity
		Green	Flashing	Network activity at 100 Mbps
		Yellow	Flashing	Network activity at 10 Mbps

After verifying correct operation, close or install the drive cover. For more details on status indicator operation, see page 144 and page 145.

Configuring and Verifying Key Drive Parameters

The PowerFlex 7-Class drive can be separately configured for the control and Reference functions in various combinations. For example, you could set the drive to have its control come from a peripheral or terminal block with the Reference coming from the network. Or you could set the drive to have its control come from the network with the Reference coming from another peripheral or terminal block. Or you could set the drive to have both its control and Reference come from the network.

The following steps in this section assume that the drive will receive the Logic Command and Reference from the network.

1. Use drive Parameter 090 - [Speed Ref A Sel] to set the drive speed Reference to '22' (DPI Port 5).
2. If hard-wired discrete digital inputs are not used to control the drive, verify that unused digital input drive Parameters 361 - [Dig In1 Sel] and 362 - [Dig In2 Sel] are set to '0' (Not Used).
3. Verify that drive Parameter 213 - [Speed Ref Source] is reporting that the source of the Reference to the drive is '22' (DPI Port 5).

This ensures that any Reference commanded from the network can be monitored by using drive Parameter 002 - [Commanded Speed]. If a problem occurs, this verification step provides the diagnostic capability to determine whether the drive/adapter or the network is the cause.

Commissioning the Adapter

To commission the adapter, you must set a unique IP address on the network. After installing the adapter and applying power, you can set the IP address by using a BOOTP/DHCP server or adapter parameters. See Setting the IP Address, Subnet Mask, and Gateway Address on page 32 for details.

By default, the adapter is configured so that you must set the IP address using a BOOTP/DHCP server or by setting the adapter to a valid address, 1-254, via the rotary switches on the adapter. An invalid address 0 or >254 will cause the module to defer to the addressing mode selected by parameter 3 [BOOTP/DHCP]. If disabled, the adapter will use the address information stored in the adapters database. If that address is invalid, the adapter will try to contact a DHCP server on the network. To use adapter parameters, you must disable the BOOTP feature. For details, see Disable the BOOTP Feature on page 32.

Important: New settings for some adapter parameters (for example, **Parameters 04 - [IP Addr Cfg 1]** through **07 - [IP Addr Cfg 4]**) are recognized only when power is applied to the adapter or it is reset. After you change parameter settings, cycle power or reset the adapter.

Configuring the Adapter

This chapter provides instructions and information for setting the parameters in the adapter.

Topic	Page
Configuration Tools	27
Using the PowerFlex 7-Class HIM	28
Using BOOTP	29
Setting the IP Address, Subnet Mask, and Gateway Address	32
Setting the Data Rate	34
Setting the I/O Configuration	35
Selecting Master-Slave or Peer-to-Peer	36
Setting the Reference Adjustment	41
Setting a Fault Action	41
Setting Web Access Control	42
Resetting the Adapter	43
Viewing the Adapter Status Using Parameters	44
Updating the Adapter Firmware	44

For a list of parameters, see Appendix B, Adapter Parameters. For definitions of terms in this chapter, see the .

Configuration Tools

The adapter stores parameters and other information in its own nonvolatile storage (NVS) memory. You must, therefore, access the adapter to view and edit its parameters. The following tools can be used to access the adapter parameters.

Tool	See
PowerFlex 7-Class HIM	page 28
BOOTP/DHCP server	page 29
Connected Components Workbench software, version 1.02 or later	http://www.ab.com/support/abdrives/webupdate/software.html, or online help (installed with the software)

Using the PowerFlex 7-Class HIM

If your drive has either an LED or LCD HIM (Human Interface Module), it can be used to access parameters in the adapter as shown below. It is recommended that you read through the steps for your HIM before performing the sequence. For additional information, see the drive documentation or the PowerFlex 7-Class HIM Quick Reference, publication 20HIM-QR001.

Using an LED HIM

Step	Example Screens
1. Press the ALT key and then the Device Sel (Sel) key to display the Device Screen. 2. Press the ▲ or ▼ key to scroll to the adapter. Letters represent files in the drive, and numbers represent ports. The adapter is usually connected to port 5. 3. Press the ↵ (Enter) key to enter your selection. A parameter database is constructed, and then the first parameter is displayed. 4. Edit the parameters using the same techniques that you use to edit drive parameters.	5001

Using an LCD HIM

Step	Example Screens
1. In the main menu, press the ▲ or ▼ key to scroll to **Device Select**. 2. Press the ↵ (Enter) key to enter your selection. 3. Press the ▲ or ▼ key to scroll to the adapter (20-COMM-ER). 4. Press the ↵ (Enter) key to select the adapter. A parameter database is constructed, and then the main menu for the adapter is displayed. 5. Edit the parameters using the same techniques that you use to edit drive parameters.	F-> Stopped Auto 0.00 Hz Main Menu: Diagnostics Parameter Device Select Port 5 Device 20-COMM-ER Main Menu: Diagnostics Parameter Device Select

NOTE: All configuration procedures throughout this chapter use the PowerFlex 7-Class LCD HIM to access parameters in the adapter and show example LCD HIM screens.

TIP When using a PowerFlex 20-HIM-A6 or 20-HIM-C6S HIM, see its User Manual, publication 20-HIM-UM001.

SMC Flex controllers require an external HIM (A3 or A6) to program the adapter. The internal Human Interface of the SMC Flex does not allow programming of the Adapter.

Using BOOTP

The IP address, subnet mask and gateway address can be configured multiple ways depending on the setting of the three rotary switches on the adapter. The switches are read on power up or reset.

1. If the switches are set to an address from 1...254, that value will be used as the LSB of the IP address 192.168.1.xxx
2. If the switches are set to an invalid number (000 or a value greater than 254), the unit will check if DHCP is enabled. If DHCP is enabled, the unit requests an address from a DHCP server.
   If DHCP is not enabled and switches are set to an illegal value, the adapter will use the IP address (along with other TCP configurable parameters) stored in nonvolatile memory. If the unit finds that the stored IP configuration is not usable (set to 0), then the unit will revert to the out-of-box behavior of DHCP being enabled.
3. Any other switch setting will cause the adapter to use the IP address data set in the adapter's database parameters.

By default, the adapter is configured so that you can set its IP address, subnet mask, and gateway address by using a BOOTP or a DHCP server. There is a variety of BOOTP servers available. The following instructions use Rockwell Automation's BOOTP Server, version 2.3 or later, a **free** standalone program that incorporates the functionality of standard BOOTP utilities with a graphical interface. It is available from http://www.software.rockwell.com/support/download/detail.cfm?ID=3390. See the Readme file and online Help for directions and more information.

TIP If desired, you can disable BOOTP and configure the IP address, subnet mask, and gateway address with adapter parameters. For details, see Setting the IP Address, Subnet Mask, and Gateway Address on page 32.

Configure the Adapter Using a BOOTP Server

1. On the adapter label, note the adapter's hardware Ethernet Address (MAC), which will be used in step 6.
2. On a computer connected to the EtherNet/IP network, start the BOOTP software.

The BOOTP Server window appears.

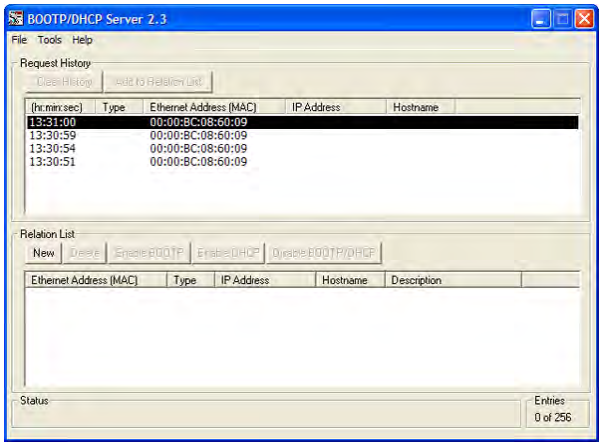

3. Select **Tools > Network Settings** to display the Network Settings window.

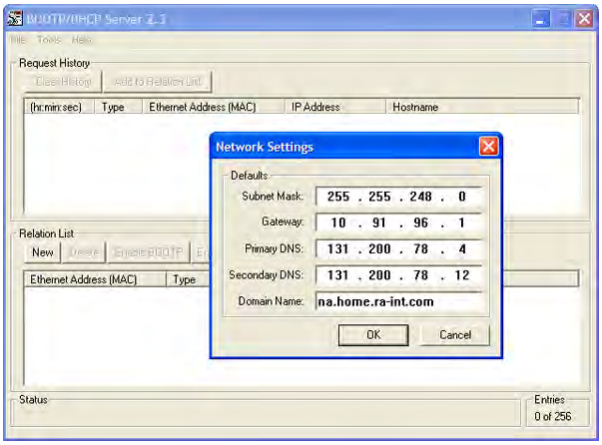

To properly configure devices on your EtherNet/IP network, you must configure settings in the BOOTP software to match the network.

4. Edit the following:

Box	Type
Subnet Mask (1)	The subnet mask for the adapter's network.
Gateway (1)	The IP address of the gateway device on the adapter's network.
Primary DNS	The address of the primary DNS server to be used on the local end of the link for negotiating with remote devices.
Secondary DNS	Optional — the address of the secondary DNS server to be used on the local end of the link for negotiating with remote devices when the primary DNS server is unavailable.
Domain Name	The text name corresponding to the numeric IP address that was assigned to the server that controls the network.

(1) For definitions of these terms, refer to the .

5. Click **OK** to apply the settings.

Devices on the network issuing BOOTP requests appear in the BOOTP Request History list.

6. In the BOOTP Request History list, either double-click the adapter's Ethernet Address (MAC) noted in Step 1, or click **New** in the Relation List.

   The New Entry dialog box appears.

   In the first case, the Ethernet Address (MAC) is automatically entered. In the latter case, you must manually enter it.

7. Edit the following:

Box	Type
IP Address	A unique IP address for the adapter
Host Name	Optional
Description	Optional

8. Click **OK** to apply the settings.

   The adapter appears in the Relation List with the new settings.

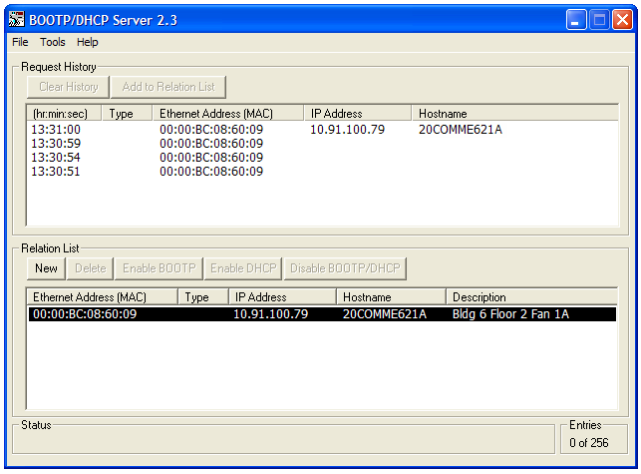

9. To assign this configuration to the adapter permanently, select the device in the Relation List and click **Disable BOOTP/DHCP**.

   When power is cycled on the adapter, it will use the configuration you assigned it and not issue new BOOTP requests.

TIP To enable BOOTP for an adapter that has had BOOTP disabled, first select the adapter in the Relation List, then click **Enable BOOTP**, and lastly reset the adapter or power cycle the drive.

10. Select **File > Save** to save the Relation List.

Setting the IP Address, Subnet Mask, and Gateway Address

By default, the adapter is configured so that you set its IP address, subnet mask, and gateway address using a BOOTP/DHCP server. To use adapter parameters instead, you must disable BOOTP/DHCP and then set the associated adapter parameters.

The IP address can be set using the rotary switches on the adapter to an address from 1...254 that will be used as the lower byte of the IP address 192.168.1.xxx. The Subnet mask will be set to 255.255.255.0.

If the rotary switches are set to any invalid address (0 or >254), the address programmed in the adapter's internal data base will be used.

Disable the BOOTP Feature

1. Set the value of **Parameter 03 - [BOOTP/DHCP]** to '0' (Disabled).

Port 5 Device 20-COMM-ER
Parameter #: 03 BOOTP 0 Disabled

Value	Setting
0	Disabled
1	Enabled (Default)

Note: The internal port used by the adapter is different for different products. The examples here show port 5, used by the SMC Flex and drive products. The SMC-50 uses port 4.

2. Reset the adapter; see Resetting the Adapter on page 43.

After disabling the BOOTP/DHCP feature, you can then configure the IP address, subnet mask, and gateway address using adapter parameters.

Set an IP Address Using Parameters

1. Verify that **Parameter 03 - [BOOTP/DHCP]** is set to '0' (Disabled).

2. Set the value of **Parameters 04 - [IP Addr Cfg 1]** through **07 - [IP Addr Cfg 4]** to a unique IP address.

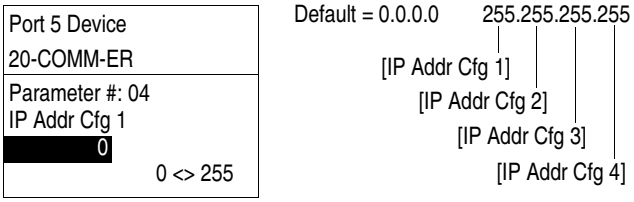

3. Reset the adapter; see Resetting the Adapter on page 43.

The Network status indicator will be steady green or flashing green if the IP address is correctly configured, and is connected to an operating ethernet network.

Set a Subnet Mask Using Parameters

1. Verify that **Parameter 03 - [BOOTP/DHCP]** is set to '0' (Disabled).
2. Set the value of **Parameters 08 - [Subnet Cfg 1]** through **11 - [Subnet Cfg 4]** to the desired value for the subnet mask.

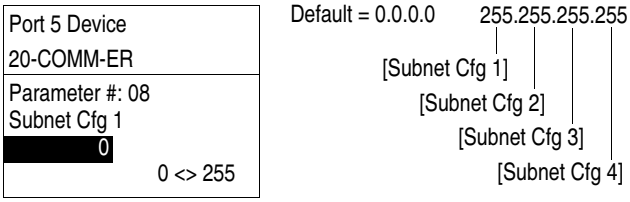

3. Reset the adapter; see Resetting the Adapter on page 43.

Set a Gateway Address Using Parameters

1. Verify that **Parameter 03 - [BOOTP]** is set to '0' (Disabled).
2. Set the value of **Parameters 12 - [Gateway Cfg 1]** through **15 - [Gateway Cfg 4]** to the IP address of the gateway device.

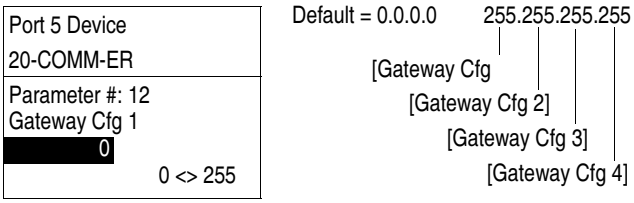

3. Reset the adapter; see Resetting the Adapter on page 43.

Setting the Data Rate

By default, the adapter is set to autodetect, so it automatically detects the data rate and duplex setting used on the network. If you need to set a specific data rate and duplex setting, the value of **Parameter 16 - [EN P1 Rate Config]** determines the Ethernet data rate and duplex setting that the adapter will use to communicate. For definitions of data rate and duplex, see Glossary on page 221.

1. Set the value of **Parameter 16 - [EN P1 Rate Config]** to the data rate at which your network is operating.

Port 5 Device 20-COMM-ER
Parameter #: 16 EN P1 Rate Config 0 Autodetect

Value	Data Rate
0	Autodetect (default)
1	10 Mbps Full
2	10 Mbps Half
3	100 Mbps Full
4	100 Mbps Half

TIP Auto detection of baud rate and duplex works properly only if the device (usually a switch) on the other end of the cable is also set to automatically detect the baud rate/duplex. If one device has the baud rate/duplex hard-coded, the other device must be hard-coded to the same settings.

2. Reset the adapter; see Resetting the Adapter on page 43.

By default, the adapter is set to autodetect, so it automatically detects the data rate and duplex setting used on the network. If you need to set a specific data rate and duplex setting, the value of **Parameter 18 - [EN P2 Rate Config]** determines the Ethernet data rate and duplex setting that the adapter will use to communicate. For definitions of data rate and duplex, see Glossary on page 221.

1. Set the value of **Parameter 18 - [ENEN P2 Rate Config]** to the data rate at which your network is operating.

Port 5 Device 20-COMM-ER
Parameter #: 18 EN P2 Rate Config 0 Autodetect

Value	Data Rate
0	Autodetect (default)
1	10 Mbps Full
2	10 Mbps Half
3	100 Mbps Full
4	100 Mbps Half

TIP Auto detection of baud rate and duplex works properly only if the device (usually a switch) on the other end of the cable is also set to automatically detect the baud rate/duplex. If one device has the baud rate/duplex hard-coded, the other device must be hard-coded to the same settings.

2. Reset the adapter; see Resetting the Adapter on page 43.

Setting the I/O Configuration

The I/O configuration determines the data that is sent to and from the drive. Logic Command/Status, Reference/Feedback, and Datalinks may be enabled or disabled. (Datalinks allow you to read/write directly to parameters in the drive using implicit I/O.) A '1' enables the I/O and a '0' disables the I/O.

1. Set the bits in **Parameter 25 - [DPI I/O Cfg]**.

Port 5 Device 20-COMM-ER
Parameter #: 25 DPI I/O Cfg x x x x x x x x x x x 0 0 0 0 **1** Cmd/Ref b00

Bit	Description
0	Logic Command/Reference (Default)
1	Datalink A
2	Datalink B
3	Datalink C
4	Datalink D
5...15	Not Used

Bit 0 is the right-most bit. It is highlighted above and equals '1'.

2. If a controller is used to control the drive, set adapter **Parameters 37 - [M-S Input]** and **38 - [M-S Output]** for Master-Slave Hierarchy.

For details, see Setting a Master-Slave Hierarchy (Scanner-to-Drive Communication) on page 36.

3. If Logic Command/Reference is enabled, configure the parameters in the drive to accept the Logic Command and Reference from the adapter.

For example, set Parameter 90 - [Speed Ref A Sel] in a PowerFlex 70 or 700 drive to '22' (DPI Port 5) so that the drive uses the Reference from the adapter. Also, verify that the mask parameters (for example, Parameter 276 - [Logic Mask]) in the drive are configured to receive the desired logic from the adapter. See the documentation for your drive for details.

The the SMC devices do not currently use the reference data sent in the IO frame. No reference configuration is required. Refer to the applicable SMC user manual for the latest reference configuration information.

4. If you enabled one or more Datalinks, configure parameters in the drive to determine the source and destination of data in the Datalink(s).

When using Datalinks, up to 8 [Data In xx] parameters and/or up to 8 [Data Out xx] parameters must be assigned to point to the appropriate parameters for your application. See Chapter 4 for an example.

5. Reset the adapter; see Resetting the Adapter on page 43.

The adapter is ready to receive I/O. You must now configure the adapter to receive I/O from a master or peer device. See Selecting Master-Slave or Peer-to-Peer. If you select a Master-Slave hierarchy, you must also configure the master to communicate with the adapter. See Chapter 4, Configuring the I/O.

Selecting Master-Slave or Peer-to-Peer

A hierarchy determines the type of device with which the adapter exchanges data. In a Master-Slave hierarchy, the adapter exchanges data with a master, such as a scanner or bridge (1756-ENBT, 1756-EN2T, 1747-L5-xxx, and so forth). In a Peer-to-Peer hierarchy, the adapter exchanges data with one or more EtherNet/IP adapters in other devices. (The devices must have compatible Logic Command/Status words.)

For both Master-Slave and Peer-to-Peer hierarchies, the devices exchanging data must be on the same IP subnet. See 'IP Addresses' in the for information about IP subnets.

Setting a Master-Slave Hierarchy (Scanner-to-Drive Communication)

1. Enable the desired I/O in **Parameter 25 - [DPI I/O Cfg]**.

   See Setting the I/O Configuration on page 35.

2. Set the bits in **Parameter 37 - [M-S Input]**.

   This parameter determines the data received from the master by the device. A '1' enables the I/O and a '0' disables the I/O.

Port 5 Device 20-COMM-ER
Parameter #: 37 M-S Input x x x x x x x x x x x 0 0 0 0 **1** Cmd/Ref b00

Bit	Description
0	Logic Command/Reference (Default)
1	Datalink A Input
2	Datalink B Input
3	Datalink C Input
4	Datalink D Input
5…15	Not Used

   Bit 0 is the right-most bit. It is highlighted above and equals '1'.

3. Set the bits in **Parameter 38 - [M-S Output]**.

   This parameter determines the data transmitted from the device to the scanner. A '1' enables the I/O and a '0' disables the I/O.

Port 5 Device 20-COMM-ER
Parameter #: 38 M-S Output x x x x x x x x x x x 0 0 0 0 **1** Status/Fdbk b00

Bit	Description
0	Status/Feedback (Default)
1	Datalink A Output
2	Datalink B Output
3	Datalink C Output
4	Datalink D Output
5…15	Not Used

   Bit 0 is the right-most bit. It is highlighted above and equals '1'.

4. Reset the adapter; see Resetting the Adapter on page 43.

The adapter is ready to receive I/O from the master (that is, scanner). You must now configure the scanner to recognize and transmit I/O to the adapter. See Chapter 4, Configuring the I/O.

Setting the Adapter to Transmit Peer-to-Peer Data (Drive-to-Drive Communication)

1. Verify that **Parameter 53 - [Peer Out Enable]** is set to '0' (Off).

   This parameter must be Off while you configure peer output parameters.

```
Port 5 Device
20-COMM-ER
Parameter #: 53
Peer Out Enable
          0
Off
```

Value	Setting
0	Off (Default)
1	On

2. Set **Parameter 51 - [Peer A Output]** to select the source of the data to output to the network.

```
Port 5 Device
20-COMM-ER
Parameter #: 51
Peer A Output
          1
Cmd/Ref
```

Value	Description
0	Off (Default)
1	Logic Command/Reference
2…5	Datalink A, B, C, or D Input
6…9	Datalink A, B, C, or D Output

3. If desired, set **Parameter 52 - [Peer B Output]** to select an additional source of the data to output to the network.

```
Port 5 Device
20-COMM-ER
Parameter #: 52
Peer B Output
          2
DL A Input
```

Value	Description
0	Off (Default)
1	Logic Command/Reference
2…5	Datalink A, B, C, or D Input
6…9	Datalink A, B, C, or D Output

4. Set **Parameters 54 - [Peer Out Time]** and **55 - [Peer Out Skip]** to establish the minimum and maximum intervals between peer messages.

Because the adapter transmits peer messages when a change-of-state condition occurs, minimum and maximum intervals are required.

– The minimum interval ensures that the adapter does not transmit messages on the network too often, thus minimizing network traffic. Set it with **Parameter 54 - [Peer Out Time]**.

– The maximum interval ensures that the adapter transmits messages often enough so that the receiving adapter(s) can receive recent data and verify that communications are working or, if communications are not working, can timeout. The maximum interval is the value of **Parameter 54 - [Peer Out Time]** multiplied by the value of **Parameter 55 - [Peer Out Skip]**.

In the example below, the minimum interval is set to 2.00 seconds (**Parameter 54 - [Peer Out Time]**), and the maximum interval is set to 4.00 seconds (2.00 x ‘2’ setting of **Parameter 55 - [Peer Out Skip]**).

```
Port 5 Device
20-COMM-ER
Parameter #: 54
Peer Out Time
2.00   s
0 <> 10.00
```

Default = 10.00 s

```
Port 5 Device
20-COMM-ER
Parameter #: 55
Peer Out Skip
2
1 <>16
```

Default = 1

5. Set **Parameter 53 - [Peer Out Enable]** to ‘1’ (On).

The adapter will transmit the data selected in **Parameters 51 - [Peer A Output]** and **52 - [Peer B Output]** to the network. Another adapter must be configured to receive the peer I/O data.

Setting the Adapter to Receive Peer-to-Peer Data

1. Verify that **Parameter 49 - [Peer Inp Enable]** is set to ‘0’ (Off).

This parameter must be Off while you configure the peer input parameters.

```
Port 5 Device
20-COMM-ER
Parameter #: 49
Peer Inp Enable
0
Off
```

Value	Setting
0	Off (Default)
1	On

2. Set **Parameters 44 - [Peer Inp Addr 1]** through **47 - [Peer Inp Addr 4]** to the IP address of the node from which you want to receive data.

Valid nodes must have 20-COMM-ER adapters connected to drives with compatible Logic Command/Status words.

```
Port 5 Device
20-COMM-ER
Parameter #: 44
Peer Inp Addr 1
0
0 <> 255
```

IP Address of Node Transmitting Peer I/O 255.255.255.255

[Peer Inp Addr 1]
[Peer Inp Addr 2]
[Peer Inp Addr 3]
[Peer Inp Addr 4]

Default = 0.0.0.0

3. Set **Parameter 40 - [Peer A Input]** to select the destination of the data that is input to the drive as Peer A.

```
Port 5 Device
20-COMM-ER
Parameter #: 40
Peer A Input
1
Cmd/Ref
```

Value	Description
0	Off (Default)
1	Logic Command/Reference
2…5	Datalink A, B, C, or D Input

Data is used from the least significant word in the event of a mismatch in Reference or Datalink sizes.

4. If desired, set **Parameter 41 - [Peer B Input]** to select the destination of the data to input to the device as Peer B.

```
Port 5 Device
20-COMM-ER
Parameter #: 41
Peer B Input
2
DL A Input
```

Value	Description
0	Off (Default)
1	Logic Command/Reference
2…5	Datalink A, B, C, or D Input

5. If the adapter receives a Logic Command, set the bits in **Parameter 42 - [Peer Cmd Mask]** that the device should use.

The bit definitions for the Logic Command word will depend on the drive to which the adapter is connected. See Appendix D or the device documentation.

```
Port 5 Device
20-COMM-ER
Parameter #: 42
Peer Cmd Mask
0000000000000000
Bit 0          B00
```

Value	Description
0	Ignore this command bit. (Default)
1	Use this command bit.

If the adapter receives a Logic Command from both a master device and a peer device, each command bit must have only one source. The source of command bits set to ‘0’ will be the master device. The source of command bits set to ‘1’ will be the peer device.

6. Reset the adapter (see Resetting the Adapter on page 43) so that changes to **Parameter 42 - [Peer Cmd Mask]** take effect.
7. Set **Parameter 48 - [Peer Inp Timeout]** to the maximum amount of time the adapter will wait for a message before timing out.

Important: This value must be greater than the product of **Parameter 54 - [Peer Out Time]** multiplied by **Parameter 55 - [Peer Out Skip]** in the adapter from which you are receiving I/O.

For example, if the value of **Parameter 54 - [Peer Out Time]** is 2.00 seconds and the value of **Parameter 55 - [Peer Out Skip]** is 2 (see example screen in step 4 on page 37), then **Parameter 48 - [Peer Inp Timeout]** needs to have a value greater than 4.00, such as 5.00 in the example screen below.

```
Port 5 Device
20-COMM-ER
Parameter #: 48
Peer Inp Timeout
        5.00      s
        0.01 <> 10.00
```

Default = 10.00 s

8. Set **Parameter 43 - [Peer Flt Action]** to the action that the adapter will take if it times out.

ATTENTION: Risk of injury or equipment damage exists. **Parameter 43 - [Peer Flt Action]** lets you determine the action of the adapter and connected device if peer communication is disrupted. By default, this parameter faults the device. You can set this parameter so that the device continues to run, however, precautions should be taken to ensure that the setting of this parameter does not create a hazard of injury or equipment damage. When commissioning the device, verify that your system responds correctly to various situations (for example, a disconnected cable).

```
Port 5 Device
20-COMM-ER
Parameter #: 43
Peer Flt Action
        0
Fault
```

Value	Description
0	Fault (Default)
1	Stop
2	Zero Data
3	Hold Last
4	Send Flt Cfg

For more details, see Setting a Fault Action on page 41.

9. Set **Parameter 49 - [Peer Inp Enable]** to '1' (On).

The adapter is now configured to receive peer I/O from the specified node. Ensure that the specified node is configured to transmit peer I/O.

Setting the Reference Adjustment

A Reference Adjustment is a percent scaling factor for the Reference from the network. It can be set from 0.00...200.00% to allow the drive's Reference to either match the network Reference (= 100.00%), scale below the network Reference (< 100.00%), or scale above the network Reference (> 100.00%).

The SMC controllers do not currently use the reference data sent in the IO frame. No Reference configuration is required. Refer to the applicable SMC user manual for the latest reference configuration information.

ATTENTION: To guard against equipment damage and/or personal injury, note that changes to adapter **Parameter 39 - [Ref Adjust]** take effect immediately. A drive receiving its Reference from the adapter will receive the newly scaled Reference, resulting in a change of speed.

If the adapter is receiving a Reference, set **Parameter 39 - [Ref Adjust]** to the desired scaling factor.

```
Port 5 Device
20-COMM-ER
Parameter #: 39
Ref Adjust
  100.00        %
      0.00 <> 200.00
```

Default = 100.00%

The adjustment takes effect as soon as it is entered.

Setting a Fault Action

By default, when I/O communication is disrupted (for example, a cable is disconnected) or the controller is idle (in program mode or faulted), the drive responds by faulting if it is using I/O from the network. You can configure a different response to these events:

- Disrupted I/O communication by using **Parameter 23 - [Comm Flt Action]**
- An idle controller by using **Parameter 24 - [Idle Flt Action]**

ATTENTION: Risk of injury or equipment damage exists. **Parameters 23 - [Comm Flt Action]** and **24 - [Idle Flt Action]** let you determine the action of the adapter and connected device if I/O communication is disrupted or the controller is idle. By default, these parameters fault the device. You can set these parameters so that the device continues to run, however, precautions should be taken to ensure that the settings of these parameters do not create a risk of injury or equipment damage. When commissioning the device, verify that your system responds correctly to various situations (for example, a disconnected cable or faulted controller).

Changing the Fault Action

Set the values of **Parameters 23 - [Comm Flt Action]** and **24 - [Idle Flt Action]** to any of these desired responses.

Value	Action	Description
0	Fault	The device is faulted and stopped. (Default)
1	Stop	The device is stopped, but not faulted.
2	Zero Data	The device is sent 0 for output data. This does not command a stop.
3	Hold Last	The device continues in its present state.
4	Send Flt Cfg	The device is sent the data that you set in the fault configuration parameters (**Parameters 27 - [Flt Cfg Logic]** through **36 - [Flt Cfg D2 In]**).

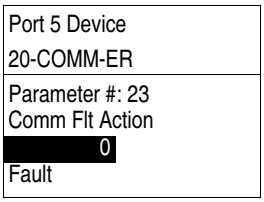

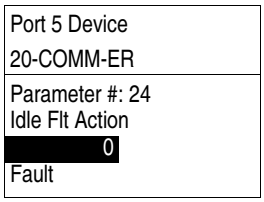

Changes to these parameters take effect immediately. A reset is not required.

If communication is disrupted and then is re-established, the drive will automatically take commands from the network again.

Setting the Fault Configuration Parameters

If you set **Parameter 23 - [Comm Flt Action]** or **24 - [Idle Flt Action]** to 'Send Flt Cfg', the values in the following parameters are sent to the drive after an I/O communications fault and/or idle fault occurs. You must set these parameters to values required by your application.

Parameter	Description
27 - [Flt Cfg Logic]	A 16-bit value sent to the device for Logic Command.
28 - [Flt Cfg Ref]	A 32-bit value (0…4294967295) sent to the device as a Reference or Datalink. **Important:** If the device uses a 16-bit Reference or 16-bit Datalinks, the most significant word of the value must be set to zero (0) or a fault will occur.
29 - [Flt Cfg x1 In] through **36 - [Flt Cfg x2 In]**	

Changes to these parameters take effect immediately. A reset is not required.

Setting Web Access Control

By using a web browser to access the IP address set for the adapter, you can view the adapter's web pages for information about the adapter, its connected device, and other DPI devices connected to the device, such as HIMs or converters. Additionally, the adapter can be configured to automatically send e-mail messages

to desired addresses when selected device faults occur and/or are cleared, and/or when the adapter takes a communication or idle fault action. For more details on the adapter's web pages, refer to Chapter 8, Viewing the Adapter Web Pages.

By default, the adapter web pages are disabled. See Figure 2 and set the Web Pages Switch (SW4) to the 'Enable Web' (up) position. **Parameter 56 [Web Enabled]** reflects the position of the web enable DIP switch on the adapter.

Important: For a change to the switch setting to take effect, the adapter must be reset (see Resetting the Adapter on page 43).

Bit 0 of **Parameter 57 - [Web Features]** is used to protect the configured settings for e-mail messaging. By default, settings are not protected and the user can make changes. To protect the configured settings, set the value of E-mail Cfg Bit 0 to '0' (Disabled). You can unprotect the configuration by changing Bit 0 back to '1' (Enabled). E-mail messaging will always remain active regardless of whether or not its settings are protected—unless e-mail messaging was **never** configured. For more information about configuring adapter e-mail messaging or to stop e-mail messages, see Email Configuration Link on page 162.

```
Port 5 Device
20-COMM-ER
Parameter #: 57
Web Features
x x x x x x x x x x x x x x x 1
E-mail Cfg          b00
```

Bit	Description
0	E-mail Cfg (Default = 0 = Disabled)
1…7	Not Used

Bit 0 is the right-most bit. It is highlighted above and equals '1'.

Changes to this parameter take effect immediately. A reset is not required.

Resetting the Adapter

Changes to switch settings and some adapter parameters require that you reset the adapter before the new settings take effect. You can reset the adapter by power cycling the drive or by using **Parameter 22- [Reset Module]**.

ATTENTION: Risk of injury or equipment damage exists. If the adapter is transmitting control I/O to the drive, the drive may fault when you reset the adapter. Determine how your drive will respond before resetting a connected adapter.

Set **Parameter 22 - [Reset Module]** to '1' (Reset Module).

```
Port 5 Device
20-COMM-ER
Parameter #: 22
Reset Module
            1
Reset Module
```

Value	Description
0	Ready (Default)
1	Reset Module
2	Set Defaults

When you enter '1' (Reset Module), the adapter will be immediately reset. When you enter '2' (Set Defaults), the adapter will set all adapter parameters to their factory-default values. After performing a Set Defaults, enter '1' (Reset Module) so that the new values take effect. The value of this parameter will be restored to '0' (Ready) after the adapter is reset.

Viewing the Adapter Status Using Parameters

The following parameters provide information about the status of the adapter. You can view these parameters at any time.

Parameter	Description
17 - [EN P1 Rate Act]	The data rate used on port 1 of the adapter
19 - [EN P2 Rate Act]	The data rate used on port 2 of the adapter
20 - [Ref/Fdbk Size]	The size of the Reference/Feedback. It will either be 16 bits or 32 bits. It is set in the device and the adapter automatically uses the correct size.
21 - [Datalink Size]	The size of the Datalinks. It will either be 16 bits or 32 bits. It is set in the device and the adapter automatically uses the correct size.
26 - [DPI I/O Act]	The Reference/Feedback and Datalinks used by the adapter. This value is the same as **Parameter 25 - [DPI I/O Cfg]** unless the parameter was changed and the adapter was not reset. Bit Definition: Not Used, Not Used, Not Used, Datalink D, Datalink C, Datalink B, Datalink A, Cmd/Ref Default: x x x 0 0 0 0 1 Bit: 7 6 5 4 3 2 1 0 0 = I/O disabled 1 = I/O enabled
50 - [Peer Inp Status]	The status of the consumed peer input connection. Values 0 = Off 1 = Waiting 2 = Running 3 = Faulted

Updating the Adapter Firmware

The adapter firmware can be updated over the network or serially through a direct connection from a computer to the drive using a 1203-USB or 1203-SSS serial converter.

When updating firmware over the network, you can use the Allen-Bradley ControlFLASH software tool, the built-in update capability of DriveExplorer Full software, or the built-in update capability of DriveExecutive software.

When updating firmware through a direct serial connection from a computer to a drive, you can use the same Allen-Bradley software tools described above, or you can use terminal emulation software set to the X-modem protocol.

If using a direct serial connection, you can use DriveExplorer Lite software.

To obtain a firmware update for this adapter, go to http://www.ab.com/support/abdrives/webupdate. This website contains all firmware update files and associated Release Notes that describe the following items:

- Firmware update enhancements and anomalies
- How to determine the existing firmware revision
- How to update firmware using DriveExplorer, DriveExecutive, ControlFLASH, or HyperTerminal software

Configuring the I/O

This chapter provides instructions on how to configure a Rockwell Automation ControlLogix or MicroLogix 1100/1400 controller to communicate with the adapter and connected PowerFlex drive.

Topic	Page
Using RSLinx Classic Software	47
ControlLogix Controller Example	48
MicroLogix 1100/1400 Controller Example	68

Using RSLinx Classic Software

RSLinx Classic software, in all its variations (Lite, Gateway, OEM, and so forth), is used to provide a communication link between the computer, network, and controller. RSLinx Classic software requires its network-specific driver to be configured before communication is established with network devices. To configure the RSLinx driver, follow this procedure.

1. Start RSLinx Classic software and select **Communications > Configure Drivers** to display the Configure Drivers screen.
2. From the Available Driver Types pull-down menu, choose EtherNet/IP Driver.
3. Click **Add New…** to display the Add New RSLinx Driver screen.
4. Use the default name or type a new name and click **OK**. The ‘Configure driver:’ screen appears.
5. Depending on your application, select either the browse local or remote subnet option.
6. Click **OK**.

The Configure Drivers screen reappears with the new driver in the Configured Drivers list.

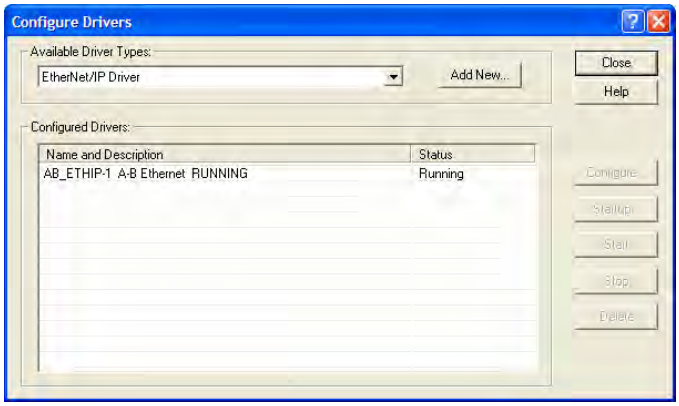

7. Click **Close** to close the Configure Drivers screen.
8. Keep RSLinx running and verify that the computer recognizes the drive.
   a. Select **Communications > RSWho**.
   b. In the menu tree, click '+' next to the Ethernet driver.

   If the 'EtherNet/IP driver' cannot see your drive, as an alternative, use either the 'Ethernet devices' or 'Remote Devices via Linx Gateway' RSLinx driver.

ControlLogix Controller Example

After the adapter is configured, the connected drive and adapter will be a single node on the network. This section provides the steps needed to configure a simple EtherNet/IP network (see Figure 8). In our example, we will configure a ControlLogix controller with 1756-ENBT (Series A) bridge to communicate with a drive using Logic Command/Status, Reference/Feedback, and 16 Datalinks (8 to read and 8 to write) over the network.

Figure 8 - Example ControlLogix EtherNet/IP Network

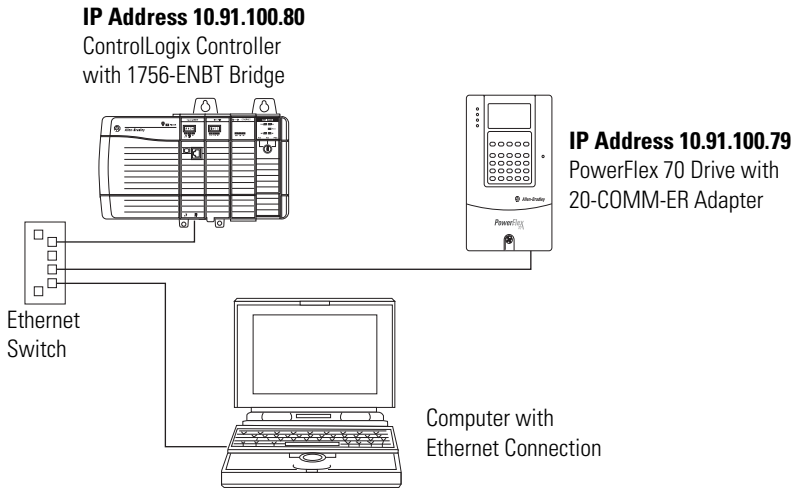

Adding the Bridge to the I/O Configuration

To establish communications between the controller and adapter over the network, you must first add the ControlLogix controller and its bridge to the I/O configuration. This procedure is similar for all RSLogix 5000 versions.

1. Start RSLogix 5000 software.
2. Select **File > New** to display the New Controller screen.

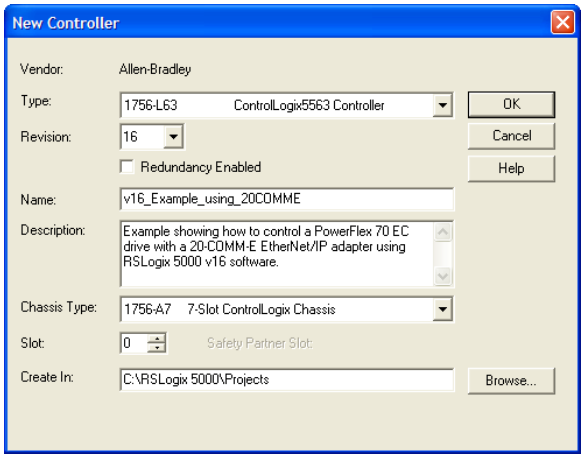

   a. Choose the appropriate choices for the fields in the screen to match your application.

   b. Click **OK**.

   The RSLogix 5000 window reappears with the treeview in the left pane.

3. In the treeview, right-click the I/O Configuration folder and choose **New Module...**

The Select Module screen appears.

4. Expand the Communications group to display all of the available communication modules.

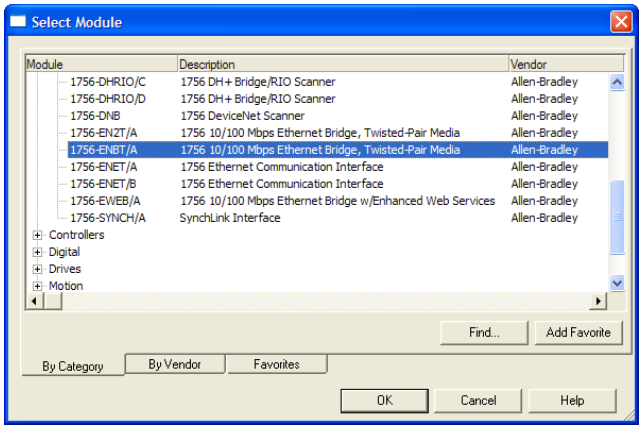

5. In the list, select the EtherNet/IP bridge used by your controller.

In this example, we use a 1756-ENBT EtherNet/IP Bridge (Series A), so the 1756-ENBT/A option is selected.

6. Click **OK**.
7. In the Select Major Revision pop-up dialog box, select the major revision of its firmware.
8. Click **OK**.

The bridge's New Module screen appears.

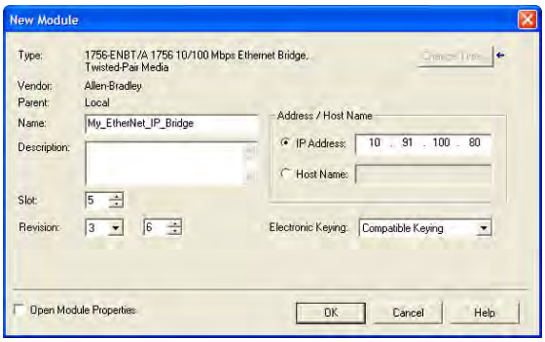

9. Edit the following:

Box	Setting
Name	A name to identify the EtherNet/IP bridge.
Description	Optional – description of the EtherNet/IP bridge.
IP Address	The IP address of the EtherNet/IP bridge.
Host Name	Not used.
Slot	The slot of the EtherNet/IP bridge in the rack.
Revision	The minor revision of the firmware in the bridge. (You already set the major revision by selecting the bridge series in step 5.)
Electronic Keying	**Compatible Keying**. The 'Compatible Keying' setting for Electronic Keying ensures the physical module is consistent with the software configuration before the controller and bridge make a connection. Therefore, be sure that you have set the correct revision in this screen. See the online Help for additional information on this and other Electronic Keying settings. If keying is not required, select 'Disable Keying'. Disable keying is recommended.
Open Module Properties	When this box is checked, clicking **OK** opens additional module properties screens to further configure the bridge. When unchecked, clicking **OK** closes the bridge's New Module screen. For this example, uncheck this box.

10. Click **OK**.

The bridge is now configured for the EtherNet/IP network, added to the RSLogix 5000 project, and appears in the I/O Configuration folder. In our example, a 1756-ENBT bridge appears under the I/O Configuration folder with its assigned name.

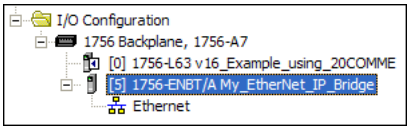

For convenience, keep the project open. Later in this chapter the project will need to be downloaded to the controller.

There are three ways to add the adapter into the I/O configuration:

- Device Add-on Profiles (RSLogix 5000 software, version 16.00 or later)
- Classic Profile (RSLogix 5000 software, versions 13.00...15.00)
- Generic Profile (RSLogix 5000 software, all versions)

These are described in separate sections below. If your version of RSLogix 5000 software supports device Add-on Profiles, we recommend that you use this method.

Using RSLogix 5000 Device Add-on Profiles, Version 16.00 or Later

When compared to using the RSLogix 5000 Classic Profile (versions 13.00...15.00) or Generic Profile (all versions), the RSLogix 5000 device Add-on Profiles provide the following advantages:

- Profiles for specific drives that provide descriptive controller tags for basic control I/O words (Logic Command/Status and Reference/Feedback) **and** Datalinks. Additionally, Datalinks automatically take the name of the drive parameter to which they are assigned. These profiles virtually eliminate I/O mismatch errors and substantially reduce drive configuration time.

- New Drive tab eliminates the need for a separate drive software configuration tool.

- Drive configuration settings are saved as part of the RSLogix 5000 software, version 16.00 or later, project file (.ACD) and also downloaded to the controller.

- Unicast connection (RSLogix 5000 software, version 18.00 or later)

- Device Add-on Profiles can be updated anytime. When a new drive is used or to benefit from new updates for Add-on Profiles, you will need the newest Add-on Profile update. Go to www.ab.com/support/abdrives/webupdate to download the latest RSLogix 5000 device Add-on Profile. To determine your device Add-on Profile version, see Allen-Bradley Knowledgebase document #65882.

Add the Drive/Adapter to the I/O Configuration

To transmit data between the bridge and the drive, you must add the drive as a child device to the parent bridge. In this example, RSLogix 5000 software, version 16.00 is used with device Add-on Profile version 4.05 or later.

1. In the treeview, right-click on the bridge and choose **New Module...** to display the Select Module screen.

   In our example, we right-click on the 1756-ENBT/A bridge. Expand the Drives group to display all of the available drives with their communication adapters.

TIP If the PowerFlex drive is not shown, go to www.ab.com/support/abdrives/webupdate and download the latest RSLogix 5000 device Add-on Profile.

2. From the list, select the drive and its connected adapter.

   For this example, we selected 'PowerFlex 70 EC-E'.

3. Click **OK**.

   The drive's New Module screen appears.

4. On the General tab, edit the following data about the drive/adapter.

Box	Setting
Name	A name to identify the drive.
Description	Optional – description of the drive/adapter.
IP Address	The IP address of the adapter.

5. On the New Module screen in the Module Definition section, click **Change...** to launch the Module Definition screen and begin the drive/adapter configuration process.

   In this example, Datalinks are used to do the following.

Read...	Write to...
Output Current (Parameter 3)	Accel Time 1 (Parameter 140)
DC Bus Voltage (Parameter 12)	Decel Time 1 (Parameter 142)
Fault 1 Code (Parameter 243)	High Resolution Reference (Parameter 308)

TIP To get the latest RSLogix 5000 device Add-on Profile, go to www.ab.com/support/abdrives/webupdate.

6. In the Module Definition screen, edit the following information.

Box	Setting
Revision	The major and minor revision of the firmware (database) in the drive. If the drive's major and minor revision is not available, the drive database is not installed on your computer. To get the correct database revision, use one of the following buttons at the bottom left of the Module Definition screen: • **Create Database:** Creates a database from an online network drive. Clicking this button displays an RSLinx software RSWho window. Browse to the online drive (for this example, PowerFlex 70 EC), select it, and click **OK**. The database will be uploaded and stored on the computer. Thereafter, close the Module Definition screen and then re-open it to display the new revision. • **Web Update:** When a drive is not available online, opens the Allen-Bradley Drives Web Updates website to download a specific database file. After downloading the file, close the Module Definition screen and then re-open it to display the new revision. • **Match Drive:** Use this button when the drive being added to the network matches the drive profile (revision, rating, configuration settings, and so forth) of an existing online network drive. Click this button to conveniently create a duplicate drive profile from the online drive, and automatically load this identical information into the Module Definition screen. This eliminates the need to manually enter the information each time a new drive with a matching profile is added to the network.
Electronic Keying	**Compatible Module**. The 'Compatible Module' setting for Electronic Keying ensures that the physical module is consistent with the software configuration before the controller and bridge make a connection. Therefore, be sure that you have set the correct revision in this screen. See the online Help for additional information on this and other Electronic Keying settings. If keying is not required, select 'Disable Keying'. Drives do not require keying, and so 'Disable Keying' is recommended.
Drive Rating	The voltage and current rating of the drive. If the drive rating is not listed, the drive database is not installed on your computer. To get the correct drive rating, use the **Create Database**, **Web Update**, or **Match Drive** button described above.
Connection	**Parameters via Datalinks.** When selecting 'Parameters via Datalinks' (default), the controller tags for the Datalinks use the drive parameter names to which they are assigned. When selecting 'Datalinks', the controller tags for the Datalinks have non-descriptive UserDefinedData[n] names like those used in RSLogix 5000 software, version 15.00.
Data Format	**Parameters.** When the Connection field is set to 'Parameters via Datalinks', 'Parameters' is automatically selected. When the Connection field is set to 'Datalinks', you must select the number of Datalinks required for your application in the 'Data Format' field.
Datalink A, B, C, D	In the Input Data column, assigns selected drive parameters to be READ by the controller. In the Output Data column, assigns selected drive parameters to be WRITTEN by the controller.
Sort Input/ Output selection…	When this box is checked, sorts the Input Data and Output Data assigned parameters by name and then by number, and enables parameter search by name. When unchecked, sorts the assigned parameters by parameter number and then by name, and enables parameter search by number.
Use Network Reference	Conveniently selects the speed reference for the drive to come from the network. This box is checked by default.

When a 32-bit parameter is selected for Input Data or Output Data for a drive with 16-bit Datalinks, two contiguous Datalinks (for example, x1 and x2, where x = A, B, C or D) are automatically assigned as a pair to

represent that parameter. See Datalink examples in the screen shown on the previous page. For more information on Datalinks, see Using Datalinks on page 86.

On the Module Definition screen, notice that the automatically-assigned controller tags DriveStatus, OutputFreq, DriveLogicRslt, and CommandedFreq are always used.

When a Datalink is enabled, the following 20-COMM-ER adapter I/O parameters are automatically set:

– **Parameter 25 - [DPI I/O Cfg]** turns on the enabled Datalink bit so the 20-COMM-ER adapter will communicate that Datalink's information with the drive.

– **Parameter 37 - [M-S Input]** turns on the enabled Datalink bit so the 20-COMM-ER adapter will input that Datalink's information from the controller.

– **Parameter 38 - [M-S Output]** turns on the enabled Datalink bit so the 20-COMM-ER adapter will output that Datalink's information to the controller.

7. Click **OK** on the Module Definition screen to save the drive and adapter configuration and close the screen.

The drive's New Module screen reappears.

8. On the New Module screen, click the Connection tab.

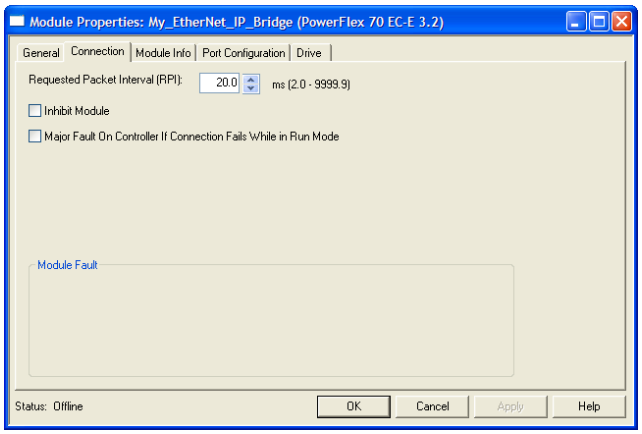

Screen for RSLogix 5000 software, version 16.00 or 17.00

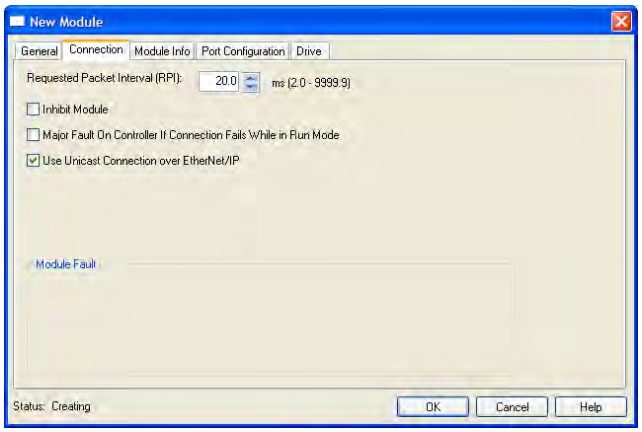

Screen for RSLogix 5000 software, version 18.00 or later

9. In the 'Requested Packet Interval (RPI)' box, set the value to 5.0 milliseconds or greater.

This value determines the maximum interval that a controller should use to move data to and from the adapter. To conserve bandwidth, use higher values for communicating with low priority devices.

The 'Inhibit Module' box, when checked, inhibits the module from communicating with the RSLogix 5000 project. When the 'Major Fault on ...' box is checked, a major controller fault will occur when the module's connection fails while the controller is in the Run Mode. For this example, leave the 'Inhibit Module' and 'Major Fault On ...' boxes unchecked.

Important: Unicast support has been added to RSLogix 5000 software, version 18.00 or later. However, to also support unicast, the controller firmware must be version 18.00 or later. Unicast is recommended whenever possible. For the benefits of unicast operation, see Preparing for an Installation on page 18.

10. On the New Module screen, click the Port Configuration tab.

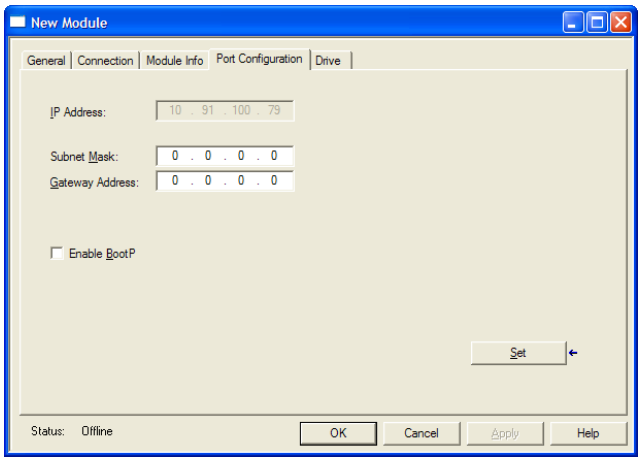

11. In the Port Configuration tab screen, edit the following information.

Box	Setting
IP Address	The IP address of the adapter that was already set in the General tab. This field is not configurable (grayed out).
Subnet Mask	The Subnet Mask configuration setting of the network. This setting must match the setting of other devices on the network (for example, 255.255.255.0).
Gateway Address	The Gateway Address configuration setting of the network. This setting must match the setting of other devices on the network (for example, 10.91.100.1).
Enable BootP	When this box is checked, BOOTP is enabled in the adapter and will ignore the IP address set in the General tab. When unchecked, the controller uses the set IP address. This is another method to enable/disable BOOTP in the adapter. For this example, leave this box unchecked.

12. Click **Set** to save the Port Configuration information which sets the corresponding offline Subnet Cfg x and Gateway Cfg x parameters in the adapter.

13. Click **OK** on the New Module screen.

The new node (‘My_PowerFlex_70_EC_Drive’ in this example) now appears under the bridge (‘My_EtherNet_IP_Bridge’ in this example) in the I/O Configuration folder. If you double-click the Controller Tags, you will see that module-defined data types and tags have been automatically created (Figure 9). Note that all tag names are defined and Datalinks include the assigned drive parameter name. After you save and download the configuration, these tags allow you to access the Input and Output data of the drive via the controller’s ladder logic.

Figure 9 - Controller Tags

Name	Value	Force Mask	Style	Data Type
My_PowerFlex_70_EC_Drive:I	{...}	{...}		AB:PowerFlex70E...
My_PowerFlex_70_EC_Drive:I.DriveStatus	2#0000...		Binary	INT
My_PowerFlex_70_EC_Drive:I.DriveStatus_Ready	0		Decimal	BOOL
My_PowerFlex_70_EC_Drive:I.DriveStatus_Active	0		Decimal	BOOL
My_PowerFlex_70_EC_Drive:I.DriveStatus_CommandDir	0		Decimal	BOOL
My_PowerFlex_70_EC_Drive:I.DriveStatus_ActualDir	0		Decimal	BOOL
My_PowerFlex_70_EC_Drive:I.DriveStatus_Accelerating	0		Decimal	BOOL
My_PowerFlex_70_EC_Drive:I.DriveStatus_Decelerating	0		Decimal	BOOL
My_PowerFlex_70_EC_Drive:I.DriveStatus_Alarm	0		Decimal	BOOL
My_PowerFlex_70_EC_Drive:I.DriveStatus_Faulted	0		Decimal	BOOL
My_PowerFlex_70_EC_Drive:I.DriveStatus_AtSpeed	0		Decimal	BOOL
My_PowerFlex_70_EC_Drive:I.DriveStatus_LocalID0	0		Decimal	BOOL
My_PowerFlex_70_EC_Drive:I.DriveStatus_LocalID1	0		Decimal	BOOL
My_PowerFlex_70_EC_Drive:I.DriveStatus_LocalID2	0		Decimal	BOOL
My_PowerFlex_70_EC_Drive:I.DriveStatus_SpdRefID0	0		Decimal	BOOL
My_PowerFlex_70_EC_Drive:I.DriveStatus_SpdRefID1	0		Decimal	BOOL
My_PowerFlex_70_EC_Drive:I.DriveStatus_SpdRefID2	0		Decimal	BOOL
My_PowerFlex_70_EC_Drive:I.DriveStatus_SpdRefID3	0		Decimal	BOOL
My_PowerFlex_70_EC_Drive:I.OutputFreq	0		Decimal	INT
My_PowerFlex_70_EC_Drive:I.OutputCurrent	0		Decimal	DINT
My_PowerFlex_70_EC_Drive:I.DCBusVoltage	0		Decimal	INT
My_PowerFlex_70_EC_Drive:I.Fault1Code	0		Decimal	INT
My_PowerFlex_70_EC_Drive:O	{...}	{...}		AB:PowerFlex70E...
My_PowerFlex_70_EC_Drive:O.DriveLogicRslt	2#0000...		Binary	INT
My_PowerFlex_70_EC_Drive:O.DriveLogicRslt_Stop	0		Decimal	BOOL
My_PowerFlex_70_EC_Drive:O.DriveLogicRslt_Start	0		Decimal	BOOL
My_PowerFlex_70_EC_Drive:O.DriveLogicRslt_Jog	0		Decimal	BOOL
My_PowerFlex_70_EC_Drive:O.DriveLogicRslt_ClearFault	0		Decimal	BOOL
My_PowerFlex_70_EC_Drive:O.DriveLogicRslt_Forward	0		Decimal	BOOL
My_PowerFlex_70_EC_Drive:O.DriveLogicRslt_Reverse	0		Decimal	BOOL
My_PowerFlex_70_EC_Drive:O.DriveLogicRslt_LocalContrl	0		Decimal	BOOL
My_PowerFlex_70_EC_Drive:O.DriveLogicRslt_MOPInc	0		Decimal	BOOL
My_PowerFlex_70_EC_Drive:O.DriveLogicRslt_Accel1	0		Decimal	BOOL
My_PowerFlex_70_EC_Drive:O.DriveLogicRslt_Accel2	0		Decimal	BOOL
My_PowerFlex_70_EC_Drive:O.DriveLogicRslt_Decel1	0		Decimal	BOOL
My_PowerFlex_70_EC_Drive:O.DriveLogicRslt_Decel2	0		Decimal	BOOL
My_PowerFlex_70_EC_Drive:O.DriveLogicRslt_SpdRefID0	0		Decimal	BOOL
My_PowerFlex_70_EC_Drive:O.DriveLogicRslt_SpdRefID1	0		Decimal	BOOL

Save the I/O Configuration to the Controller

After adding the bridge and drive/adapter to the I/O configuration, you must download the configuration to the controller. You should also save the configuration to a file on your computer.

1. In the RSLogix 5000 window, select **Communications > Download**.

The Download dialog box appears.

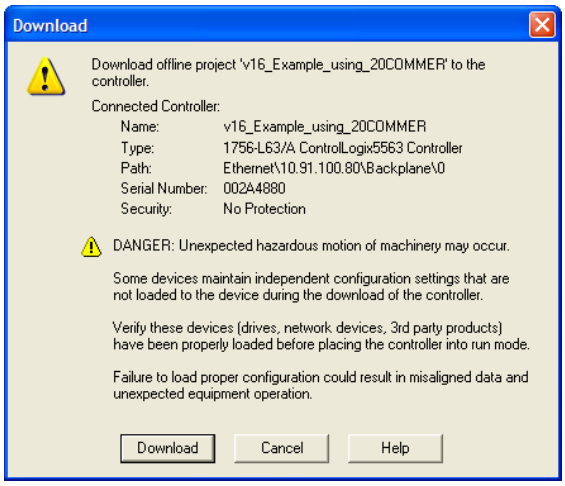

TIP If a message box reports that RSLogix 5000 software is unable to go online, select **Communications > Who Active** to find your controller in the Who Active screen. After finding and selecting the controller, click **Set Project Path** to establish the path. If your controller does not appear, you need to add or configure the EtherNet/IP driver with RSLinx software. See Using RSLinx Classic Software on page 47 and RSLinx online help for details.

2. Click **Download** to download the configuration to the controller.

   When the download is successfully completed, RSLogix 5000 software goes into the Online mode and the I/O Not Responding box in the upper-left of the window should be flashing green. Also, a yellow warning symbol ⚠ should be displayed on the I/O Configuration folder in the treeview and on the drive profile.

   If the controller was in Run Mode before clicking **Download**, RSLogix 5000 software prompts you to change the controller mode back to Remote Run. In this case, choose the appropriate mode for your application. If the controller was in Program Mode before clicking **Download**, this prompt will not appear.

3. Select **File > Save**.

   If this is the first time you saved the project, the Save As dialog box appears.

   a. Navigate to a folder.

   b. Type a file name.

   c. Click **Save** to save the configuration to a file on your computer.

   To be sure that the present project configuration values are saved, RSLogix 5000 software prompts you to upload them. Click **Yes** to upload and save the values.

Correlate the Drive with the Controller

You must now correlate the drive settings to the RSLogix 5000 project I/O settings so that they match. This requires loading the project I/O settings into the drive.

1. In the treeview under I/O Configuration, right-click on the drive profile (for this example, My_PowerFlex_70_EC_Drive) and choose **Properties**.

2. Click the Drive tab.

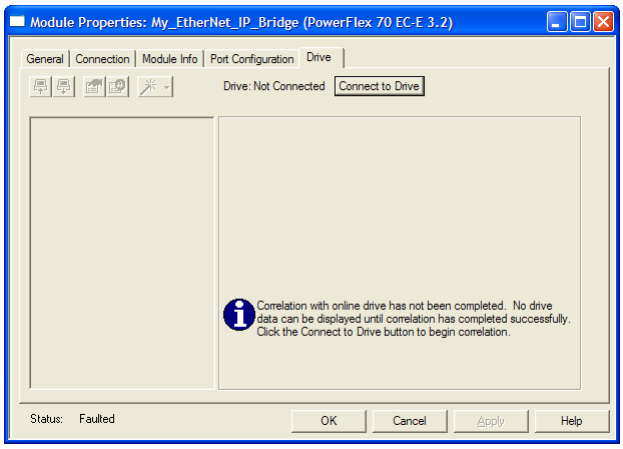

3. Click **Connect to Drive** to begin the correlation process.

After the drive configuration data has been verified, a pop-up dialog box appears, which synchronizes ports from the online drive to the project to be sure that correct Datalinks are assigned.

4. Click OK.

If the Differences Found screen appears—which is typical, click **Download**. This will download the project settings from the controller to the drive and its connected adapter. If **Upload** is clicked, the drive and adapter settings are uploaded to the controller.

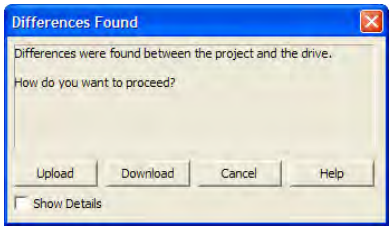

TIP On subsequent connections to the drive (after initial download), click **Upload**.

5. When the Reset Comm Module screen appears, click **Yes** to reset the communication adapter so that the new I/O settings take effect.

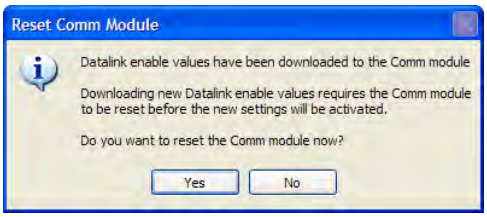

After resetting the communication module, which may take up to a minute to complete, the I/O OK box in the upper-left of the RSLogix 5000 window should now be steady green and the yellow warning symbols ⚠ in

the treeview under the I/O Configuration folder and drive profile should be gone.

TIP If the yellow warning symbol ⚠ for your drive remains displayed, first try power cycling the drive. Otherwise, double-click the drive under the I/O tree and click the Connection tab to find the cause of the problem.

6. The Module Properties Drive Tab screen re-appears.

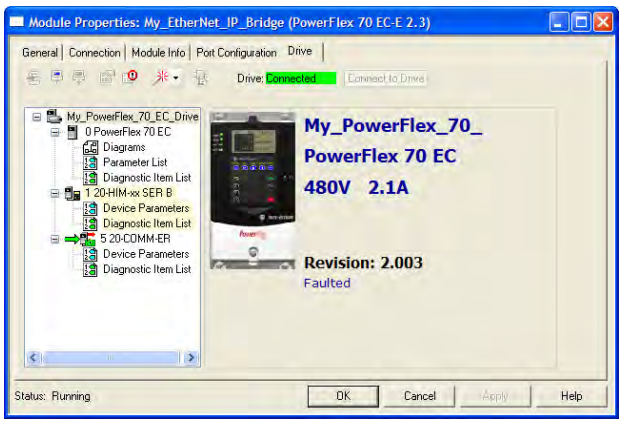

You can view the drive's Parameter List, Diagnostic Items List, and lists for any connected peripheral, including the 20-COMM-ER. While connected to the drive, you can dynamically change values of parameters. Diagnostic items and diagram views can be used for troubleshooting. Table 24 on page 147 provides diagnostic items for troubleshooting the adapter.

7. Click **OK** when finished to close the Module Properties screen for the drive.

Using the RSLogix 5000 Classic Profile, Versions 13.00…15.00

When compared to using the RSLogix 5000 Generic Profile (all versions), the RSLogix 5000 Classic Profile provides these advantages:

- Profiles for specific drives (Figure 10) that provide descriptive controller tags for basic control I/O words (Logic Command/Status and Reference/Feedback). The controller tags for Datalinks, however, have non-descriptive UserDefinedData[n] names.

- Improved I/O configuration—no I/O assembly configuration required. Basic control I/O is defined, but Datalinks still need to be configured/mapped.

- The Setup tab includes a DriveExecutive icon link to conveniently launch DriveExecutive software (when installed on computer) to match the adapter I/O configuration with the controller, and to assign the Datalink parameters in the drive. This reduces I/O mismatches.

TIP Since the RSLogix 5000 Classic Profile has been significantly improved upon by RSLogix 5000 Device Add-on Profiles, version 16.00 or later, we recommend using RSLogix 5000 Device Add-on Profiles to take advantage of its benefits (more intuitive, time saving, and less likely to make I/O configuration errors).

Figure 10 - Classic Profile Screens for Drives

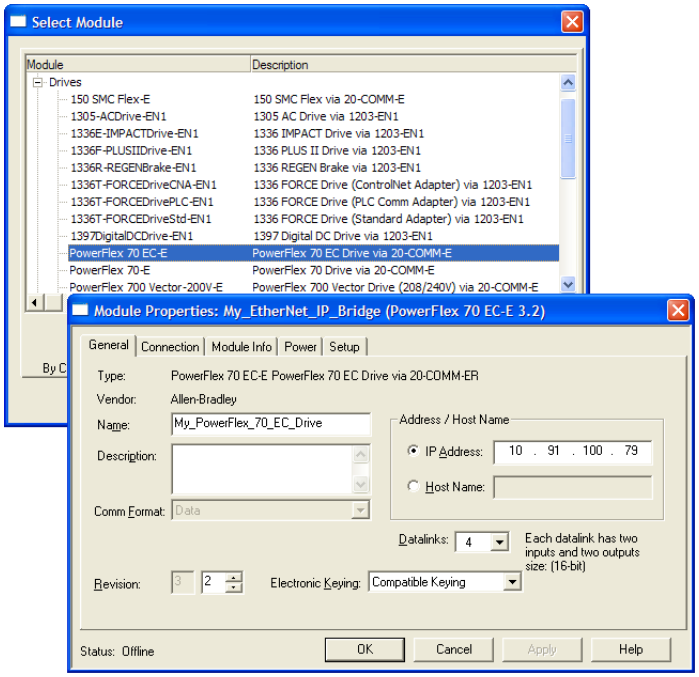

When Datalinks are used, you must enable the desired Datalinks and assign names to their non-descriptive controller tags. When a Datalink is enabled, you must set the following adapter I/O parameters:

- **Parameter 25 - [DPI I/O Cfg]** turns on the enabled Datalink bit so the 20-COMM-ER adapter will communicate that Datalink's information with the drive.

- **Parameter 37 - [M-S Input]** turns on the enabled Datalink bit so the 20-COMM-ER adapter will input that Datalink's information from the controller.

- **Parameter 38 - [M-S Output]** turns on the enabled Datalink bit so the 20-COMM-ER adapter will output that Datalink's information to the controller.

When using Datalinks, up to 8 [Data In xx] parameters and/or up to 8 [Data Out xx] parameters must be assigned to point to the appropriate drive parameters for your application.

Using the RSLogix 5000 Generic Profile, All Versions

We recommend that you use the basic RSLogix 5000 Generic Profile for only the following reasons:

- A specific drive profile in other versions of RSLogix 5000 software is unavailable.
- Users are already familiar with a drive Generic Profile and do not want to convert an existing project to a Classic Profile, versions 13.00...15.00, or to a device Add-on Profile (RSLogix 5000 software, version 16.00 or later).
- A project must maintain specific revision level control.
- The controller cannot be taken offline. RSlogix 5000 software, version 16.00 or later, enables the drive Generic Profile to be added while the controller is online and in the Run mode.

Add the Drive/Adapter to the I/O Configuration

To transmit data between the bridge and the drive, you must add the drive as a child device to the parent bridge.

1. In the treeview, right-click the bridge and select **New Module...** to display the Select Module screen.

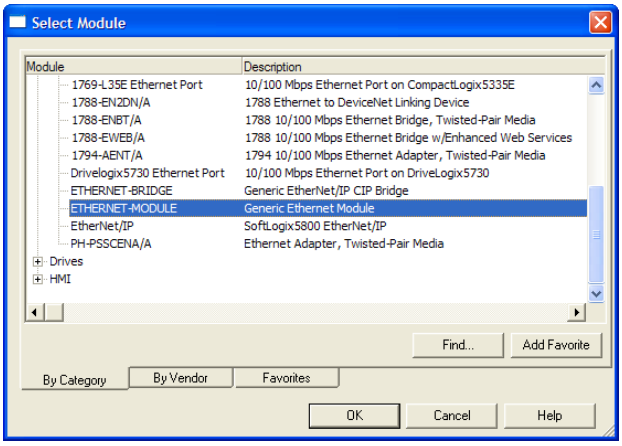

In our example, we right-click on the 1756-ENBT/A bridge.

2. Expand the Communications group to display all of the available communication modules.

3. Select “ETHERNET-MODULE” from the list to configure the drive and its connected 20-COMM-ER adapter.
4. Click **OK**.

The drive’s New Module screen appears.

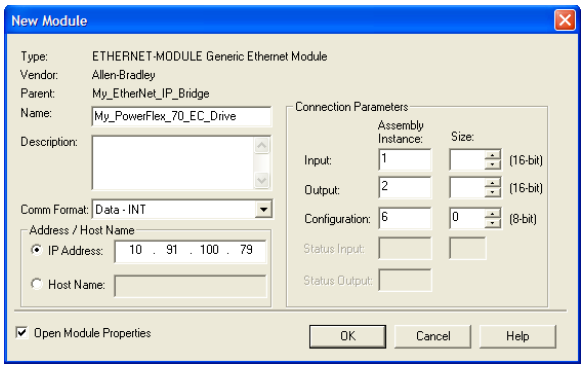

5. Edit the following information about the drive and adapter.

Box	Setting
Name	A name to identify the drive and adapter.
Description	Optional – description of the drive/adapter.
Comm Format	**Data - INT** (This setting formats the data in 16-bit words.)
IP Address	The IP address of the adapter.
Open Module Properties	When this box is checked, clicking **OK** opens additional module properties screens to further configure the drive/adapter. When unchecked, clicking **OK** closes the drive’s New Module screen. For this example, check this box.

6. Under Connection Parameters, edit the following information.

Box	Assembly Instance	Size
Input	**1** (This value is required.)	The value will vary based on your application (setting of **Parameters 25 - [DPI I/O Cfg]** and **38 - [M-S Output]**) and the size (16-bit or 32-bit) of the Reference/Feedback and Datalinks in the drive. See Table 2, Table 3, or Table 4 on page 64.
Output	**2** (This value is required.)	The value will vary based on your application (setting of **Parameters 25 - [DPI I/O Cfg]** and **37 - [M-S Input]**) and the size (16-bit or 32-bit) of the Reference/Feedback and Datalinks in the drive. See Table 2, Table 3, or Table 4 on page 64.
Configuration	**6** (This value is required.)	**0** (This value is required.)

The following tables define the number of 16-bit words that you need to enter for the Input Size and Output Size boxes depending on your configuration.

Table 2 - Devices with 16-bit Reference/Feedback and 16-bit Datalinks

These products include the following:

- PowerFlex 70 drives with standard or enhanced control
- PowerFlex 700 drives with standard control
- PowerFlex 700H drives
- SMC Flex smart motor controllers
- SMC-50 smart motor controllers

Logic Command/ Status	Ref/Fdbk (16-bit)	Datalinks (16-bit)				User Configured Settings				
		A	B	C	D	Size in Words		Par. 23 - [DPI I/O Cfg]	Par. 35 - [M-S Input]	Par. 36 - [M-S Output]
						Input	Output			
✔	✔					4	2	...0 0001	...0 0001	...0 0001
✔	✔	✔				6	4	...0 0011	...0 0011	...0 0011
✔	✔	✔	✔			8	6	...0 0111	...0 0111	...0 0111
✔	✔	✔	✔	✔		10	8	...0 1111	...0 1111	...0 1111
✔	✔	✔	✔	✔	✔	12	10	...1 1111	...1 1111	...1 1111

Table 3 - Devices with 16-bit Reference/Feedback and 32-bit Datalinks

These products include the following:

- PowerFlex 700 drives with vector control
- PowerFlex 700L drives with 700 control
- PowerFlex Digital DC drives
- SMC Controllers

Logic Command/ Status	Ref/Fdbk (16-bit)	Datalinks (32-bit)				User Configured Settings				
		A	B	C	D	Size in Words		Par. 23 - [DPI I/O Cfg]	Par. 35 - [M-S Input]	Par. 36 - [M-S Output]
						Input	Output			
✔	✔					4	2	...0 0001	...0 0001	...0 0001
✔	✔	✔				8	6	...0 0011	...0 0011	...0 0011
✔	✔	✔	✔			12	10	...0 0111	...0 0111	...0 0111
✔	✔	✔	✔	✔		16	14	...0 1111	...0 1111	...0 1111
✔	✔	✔	✔	✔	✔	20	18	...1 1111	...1 1111	...1 1111

Table 4 - Drives with 32-bit Reference/Feedback and 32-bit Datalinks

These products include the following:

- PowerFlex 700S drives with Phase I or Phase II control
- PowerFlex 700L drives with 700S control
- PowerFlex 753 drives
- PowerFlex 755 drives

Logic Command/ Status	Ref/Fdbk (32-bit)	Datalinks (32-bit)				User Configured Settings				
		A	B	C	D	Size in Words		Par. 23 - [DPI I/O Cfg]	Par. 35 - [M-S Input]	Par. 36 - [M-S Output]
						Input	Output			
✔	✔					6	4	...0 0001	...0 0001	...0 0001
✔	✔	✔				10	8	...0 0011	...0 0011	...0 0011
✔	✔	✔	✔			14	12	...0 0111	...0 0111	...0 0111
✔	✔	✔	✔	✔		18	16	...0 1111	...0 1111	...0 1111
✔	✔	✔	✔	✔	✔	22	20	...1 1111	...1 1111	...1 1111

TIP For instructions on configuring the I/O for the adapter using **Parameter 25 - [DPI I/O Cfg]** and its Master-Slave Hierarchy using **Parameters 37 - [M-S Input]** and **38 - [M-S Output]**, see Setting the I/O Configuration on page 35.

When using Datalinks, up to 8 [Data In xx] parameters and/or up to 8 [Data Out xx] parameters must be assigned to point to the appropriate device parameters for your application.

7. After setting the information in the device's New Module screen, click **OK**.

The Module Properties screen appears.

8. Click the Connection tab.

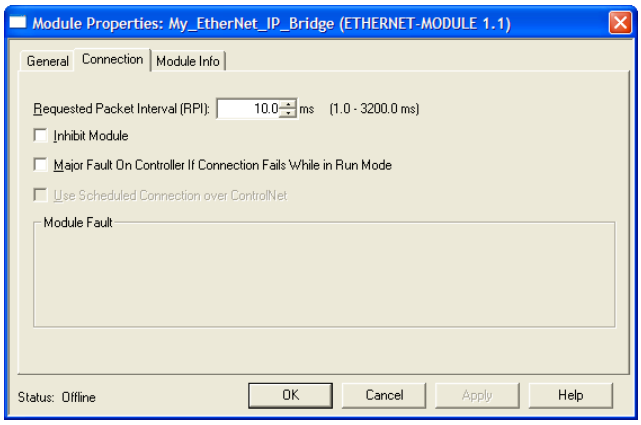

9. In the 'Requested Packet Interval (RPI)' box, set the value to 5.0 ms or greater.

This value determines the maximum interval that a controller should use to move data to and from the adapter. To conserve bandwidth, use higher values for communicating with low priority devices. For this example, leave the 'Inhibit Module' and 'Major Fault …' boxes unchecked.

10. Click **OK**.

The new node ('My_PowerFlex_70_EC_Drive' in this example) now appears under the bridge ('My_EtherNet_IP_Bridge' in this example) in the I/O Configuration folder. If you double-click the Controller Tags, you will see that module-defined data types and tags have been automatically created (Figure 11). After you save and download the configuration, these tags allow you to access the Input and Output data of the drive via the controller's ladder logic.

For this example, all Datalinks (A, B, C, and D) are enabled. The Input Size is set to 12 words and the Output Size is set to 10 words. Also, the following adapter I/O parameters are set to the following values.

Adapter Parameter No.	Setting
25 - [DPI I/O Cfg]	xxxx xxxx xxx1 1111
37 - [M-S Input]	xxxx xxxx xxx1 1111
38 - [M-S Output]	xxxx xxxx xxx1 1111

11. Reset the adapter (see Resetting the Adapter on page 43) or power cycle the device.

For the device speed reference and Datalink parameter values and the adapter setup parameter values, see Drive and Adapter Parameter Settings on page 90.

Figure 11 - Controller Tags

Name	Value	Force Mask	Style	Data Type
+ My_PowerFlex_70_EC_Drive:C	{...}	{...}		AB:ETHERNET_...
− My_PowerFlex_70_EC_Drive:I	{...}	{...}		AB:ETHERNET_...
− My_PowerFlex_70_EC_Drive:I.Data	{...}	{...}	Decimal	INT[12]
+ My_PowerFlex_70_EC_Drive:I.Data[0]	0		Decimal	INT
+ My_PowerFlex_70_EC_Drive:I.Data[1]	0		Decimal	INT
+ My_PowerFlex_70_EC_Drive:I.Data[2]	0		Decimal	INT
+ My_PowerFlex_70_EC_Drive:I.Data[3]	0		Decimal	INT
+ My_PowerFlex_70_EC_Drive:I.Data[4]	0		Decimal	INT
+ My_PowerFlex_70_EC_Drive:I.Data[5]	0		Decimal	INT
+ My_PowerFlex_70_EC_Drive:I.Data[6]	0		Decimal	INT
+ My_PowerFlex_70_EC_Drive:I.Data[7]	0		Decimal	INT
+ My_PowerFlex_70_EC_Drive:I.Data[8]	0		Decimal	INT
+ My_PowerFlex_70_EC_Drive:I.Data[9]	0		Decimal	INT
+ My_PowerFlex_70_EC_Drive:I.Data[10]	0		Decimal	INT
+ My_PowerFlex_70_EC_Drive:I.Data[11]	0		Decimal	INT
− My_PowerFlex_70_EC_Drive:O	{...}	{...}		AB:ETHERNET_...
− My_PowerFlex_70_EC_Drive:O.Data	{...}	{...}	Decimal	INT[10]
+ My_PowerFlex_70_EC_Drive:O.Data[0]	0		Decimal	INT
+ My_PowerFlex_70_EC_Drive:O.Data[1]	0		Decimal	INT
+ My_PowerFlex_70_EC_Drive:O.Data[2]	0		Decimal	INT
+ My_PowerFlex_70_EC_Drive:O.Data[3]	0		Decimal	INT
+ My_PowerFlex_70_EC_Drive:O.Data[4]	0		Decimal	INT
+ My_PowerFlex_70_EC_Drive:O.Data[5]	0		Decimal	INT
+ My_PowerFlex_70_EC_Drive:O.Data[6]	0		Decimal	INT
+ My_PowerFlex_70_EC_Drive:O.Data[7]	0		Decimal	INT
+ My_PowerFlex_70_EC_Drive:O.Data[8]	0		Decimal	INT
+ My_PowerFlex_70_EC_Drive:O.Data[9]	0		Decimal	INT

Save the I/O Configuration to the Controller

After adding the bridge and drive/adapter to the I/O configuration, you must download the configuration to the controller. You should also save the configuration to a file on your computer.

TIP When using RSLogix 5000 software, version 16.00 or later, you can add the I/O configuration of a Generic Profile while the controller is online and in the Run mode.

1. In the RSLogix 5000 window, select **Communications > Download**.

The Download dialog box appears.

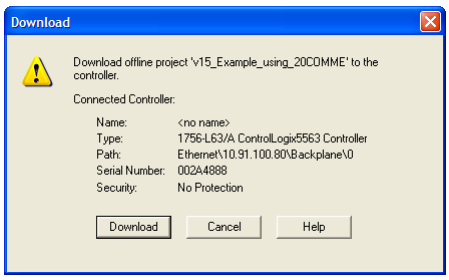

TIP If a message box reports that RSLogix 5000 software is unable to go online, select **Communications > Who Active** to find your controller in the Who Active screen. After finding and selecting the controller, click **Set Project Path** to establish the path. If your controller does not appear, you need to add or configure the EtherNet/IP driver with RSLinx software. See Using RSLinx Classic Software on page 47 and RSLinx online help for details.

2. Click **Download** to download the configuration to the controller.

   When the download is successfully completed, RSLogix 5000 software goes into the Online mode and the I/O OK box in the upper-left of the screen should be steady green.

3. Select **File > Save**.

   If this is the first time you saved the project, the Save As dialog box appears. Navigate to a folder, type a file name, and click **Save** to save the configuration to a file on your computer.

   To be sure that the present project configuration values are saved, RSLogix 5000 software prompts you to upload them. Click **Yes** to upload and save the values.

4. Configure any Datalinks in the drive (for example, Datalink parameters 300...317 in PowerFlex 70 drives) that were enabled in the controller and adapter during I/O configuration (Table 2, Table 3, or Table 4).

   Each Datalink being used must be assigned to a specific parameter in the drive or connected peripheral. If this is not done, the controller will receive or send placeholder data instead of actual drive or peripheral parameter values.

5. Place the controller in Remote Run or Run Mode.

Limitations Using a MicroLogix 1100/1400 Controller

Controlling I/O with explicit messages is relatively complex compared to normal implicit I/O control.

ControlLogix and CompactLogix controllers with EtherNet/IP provide the easiest and most integrated form of implicit I/O control for a device. RSLogix 5000 software, version 16.00 or later, for ControlLogix and CompactLogix controllers contains integrated profiles for PowerFlex drives that, with a few clicks of the mouse, automatically create all controller tags and an implicit connection at the specified Requested Packet Interval to control the drive. This connection is monitored at both ends to verify that the controller and drive are communicating. A watchdog will cause a drive fault if the drive does not respond within approximately 100 milliseconds. Therefore, using a ControlLogix or CompactLogix controller is by far the much preferred method of controlling drives on EtherNet/IP.

If you are not using either of these type of controllers, then devices on EtherNet/IP can be controlled with explicit messages using MicroLogix 1100/1400 controllers with the following limitations:

- An explicit message is a much slower form of control and is non-deterministic. This means that you cannot guarantee how long the device will take to start up or stop when the command is given. Therefore, all equipment used in this manner should be subject to a risk assessment, taking into account the mechanical and electrical implementation.
- A timeout value (in seconds) in the EtherNet/IP adapter will issue a device fault if a message is not received from the controller within the specified time. However, the controller has no way of detecting a loss of communication to the device until the next cycle of explicit messages. This is another factor in the risk assessment.
- Any additional devices to be controlled will require additional explicit messages for their control, and they need to be carefully sequenced. Most controllers have small communication queues (see the User Manual), which need to be carefully managed if messages are not to be lost.
- Each controller has a limited number of communication connections (see its User Manual for maximum connections), which will limit the number of drives that can be connected.

In summary, unlike a ControlLogix or CompactLogix controller, programming a MicroLogix 1100/1400 controller by using RSLogix 500 software with explicit messages is more difficult, and produces a more complex program.

MicroLogix 1100/1400 Controller Example

After the adapter is configured, the connected drive and adapter will be a single node on the network. This section provides the steps needed to configure a simple EtherNet/IP network (see Figure 12). In our example, we will configure a MicroLogix 1100 controller to communicate with a drive using Logic Command/Status, Reference/Feedback, and Datalinks over the network.

Figure 12 - Example MicroLogix 1100/1400 Controller EtherNet/IP Network

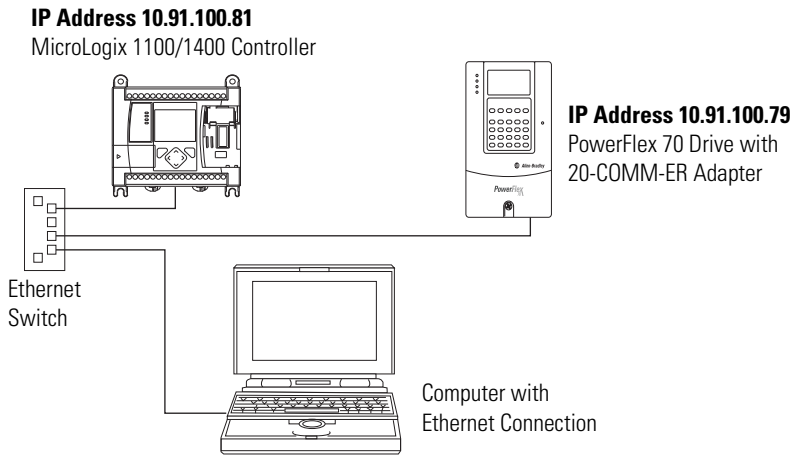

TIP Information for PowerFlex 750-Series drives has been added where applicable.

Configuring Parameters for Network I/O

Because the I/O for the drive is message-based, there is no need to configure any I/O inside the RSLogix 500 project, version 7.00 or later, until using the I/O as described in Chapter 5.

However, to get the adapter to operate with the I/O created in Chapter 5, we need to configure the adapter to accept the I/O and drive to point to the appropriate Datalinks.

1. For this example, the following adapter I/O parameters are set to the following values.

Adapter Parameter No.	Setting
25 - [DPI I/O Cfg]	xxxx xxxx xxx1 1111
37 - [M-S Input]	xxxx xxxx xxx1 1111
38 - [M-S Output]	xxxx xxxx xxx1 1111

2. Reset the adapter (see Resetting the Adapter on page 43) or power cycle the drive.

For the drive speed reference and Datalink parameter values and the adapter setup parameter values, refer to Drive and Adapter Parameter Settings on page 96.

Creating RSLogix 500 Project, Version 7.00 or Later

To transmit (read and write) data between the controller and drive, you must create message instructions that allocate data table addresses in the controller for Logic Command/Status, Reference/Feedback, and Datalinks.

Select the Controller

1. Start RSLogix 500 software.

   The RSLogix 500 window appears.

2. Select **File > New** to display the Select Processor Type screen.

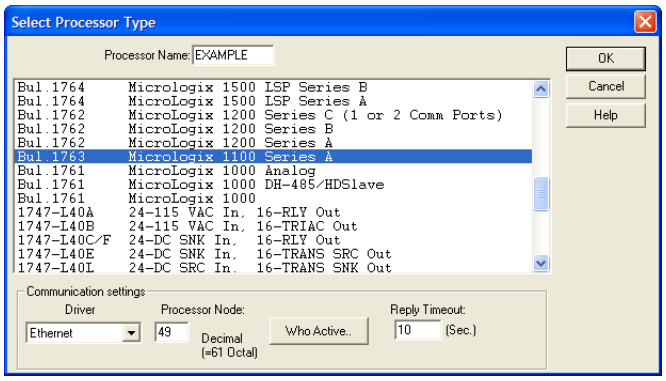

3. Assign a name for the processor.
4. In the list, select the MicroLogix 1100.
5. Choose the appropriate choices for the fields in the screen to match your application.
6. Click **OK**.

   The RSLogix 500 project window appears.

Create MicroLogix 1100/1400 Ladder Logic for the Control Timeout

1. In the RSLogix 500 project window treeview under Program Files double-click on LAD 2.
2. Insert a ladder rung.
3. Double-click on the rung to display the rung editor.
4. Enter **MSG MGxx:n**, where:

   xx is an unused data file number (for example, MG10:n), and
   n is an unused element of the data file chosen for xx (for example, MG10:0)
5. Press **Enter**.
6. Insert another separate rung.
7. Double-click on the rung to display the rung editor.
8. Enter **BST XIC MGxx:n/DN NXB XIC MGxx:n/ER BND OTU MGxx:n/EN**, where:

   xx and n must correspond to the assigned data file number and element (for example, MG10:0) for the message created in steps 2…5.

Important: The information must be entered with appropriate numbers for 'xx' and 'n' for your application, and with spaces and forward slashes exactly as shown.

9. Press **Enter**.
10. In the MSG instruction (Figure 13), double-click Setup Screen to launch the message configuration screen (Figure 14).

Figure 13 - MicroLogix 1100/1400 Ladder Logic for the Control Timeout

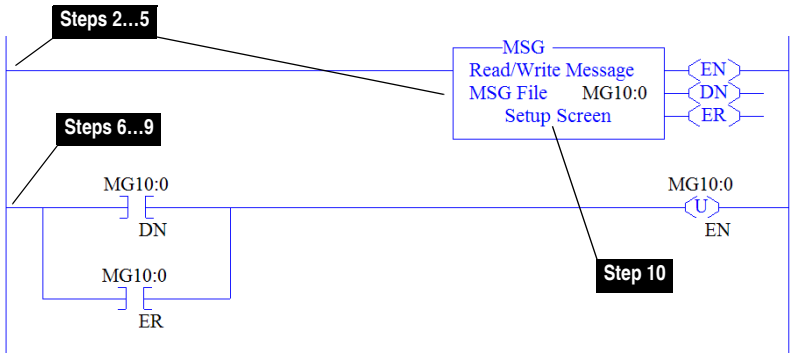

11. Configure the General tab fields by entering or verifying the information shown in the message configuration screen.

Figure 14 - MicroLogix 1100/1400 Message Configuration Screens for the Control Timeout

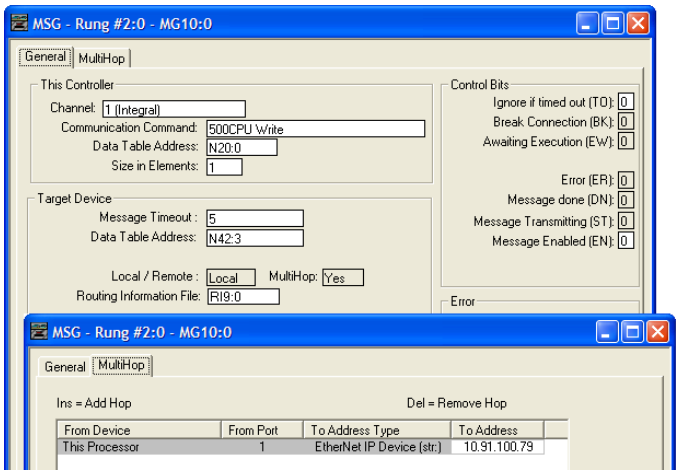

General Tab Box	Setting
This Controller (data for MicroLogix 1100)	
Channel	**1 (integral)**. Controller port to which the network is connected.
Communication Command	**500CPU Write**. The controller type and command type for the controller to read or write data. Because the MicroLogix 1100 is part of the SLC-500 controller family, the '500CPU' controller type was selected. The 'Write' command type was selected to write the control timeout value to the drive.
Data Table Address (1)	**N20:0**. An unused controller data table address containing the control timeout value to be written.
Size in Elements (2)	**1**. Number of elements (words) to be transferred. Each element size is a 16-bit integer.
Target Device (data for adapter/drive)	
Message Timeout	**5**. Message timeout duration in seconds.
Data Table Address (3)	**N42:3**. Specific starting address of the destination file in the drive.
Routing Information File	**RI9:0**. An unused routing information file for the controller.
MultiHop Tab Box	**Setting**
To Address	**10.91.100.79.** The IP address of the adapter connected to the drive.

(1) For details on data table addresses for this example project, see Table 11…Table 14 starting on page 98.

(2) For details to determine element size for a specific drive, see Understanding Controller Data Table Addresses on page 97.

(3) For details on setting the control timeout value and its function, see N-Files on page 192. The Control Timeout (N42:3) is stored in RAM. If the 20-COMM-ER adapter is power cycled, the Control Timeout Message must be re-sent. If the Control Timeout is not changed from a non-zero value, the control message (page 75) will error out.

TIP The Control Timeout (N42:3) must be changed to a non-zero value (5…20 seconds recommended). If the Control Timeout is not changed from a non-zero value, the control message (page 75) will error out. The Control Timeout is stored in RAM. If the adapter is power cycled, the Control Timeout Message must be re-sent.

Create MicroLogix 1100/1400 Ladder Logic for the Logic Status, Feedback, and Datalink Out

1. Insert another separate rung.
2. Double-click on the rung to display the rung editor.
3. Enter **MSG MGxx:n**, where:

   xx is an unused data file number (for example, MG11:n), and
   n is an unused element of the data file chosen for xx (for example, MG11:0)

4. Press **Enter**.
5. Insert another separate rung.
6. Double-click on the rung to display the rung editor.
7. Enter **BST XIC MGxx:n/DN NXB XIC MGxx:n/ER BND OTU MGxx:n/EN**, where:

   xx and n must correspond to the assigned data file number and element (for example, MG11:0) for the message created in steps 1…4.

Important: The information must be entered with appropriate numbers for ‘xx’ and ‘n’ for your application, and with spaces and forward slashes exactly as shown.

8. Press **Enter**.
9. In the MSG instruction (Figure 15), double-click Setup Screen to launch the message configuration screen (Figure 16).

Figure 15 - MicroLogix 1100/1400 Ladder Logic for the Logic Status, Feedback, and Datalink Out

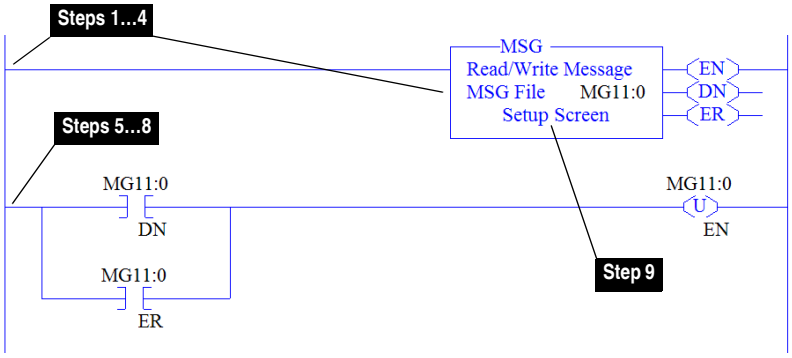

10. Configure the General tab fields by entering or verifying the information shown in the message configuration screen.

Figure 16 - MicroLogix 1100/1400 Message Configuration Screens for the Logic Status, Feedback, and Datalink Out

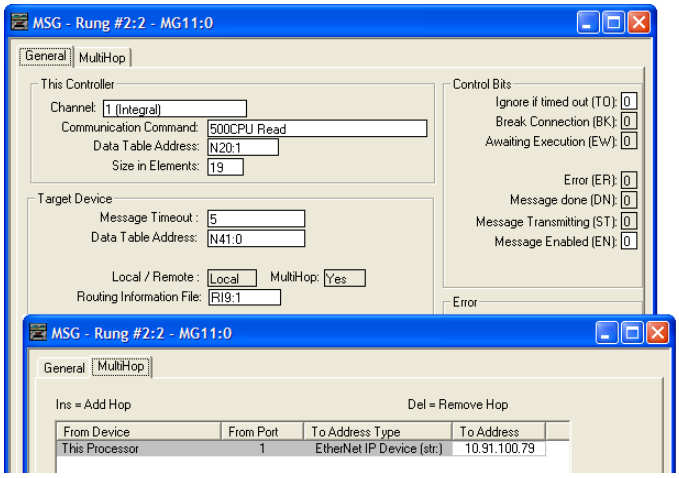

General Tab Box	Setting
This Controller (data for MicroLogix 1100)	
Channel	**1 (integral)**. Controller port to which the network is connected.
Communication Command	**500CPU Read**. The controller type and command type for the controller to read or write data. Because the MicroLogix 1100 is part of the SLC-500 controller family, the '500CPU' controller type was selected. The 'Read' command type was selected to read data from the drive.
Data Table Address (1)	**N20:1**. An unused controller data table address containing the data to be read from the drive.
Size in Elements (2)	**19**. Number of elements (words) to be transferred. Each element size is a 16-bit integer.
Target Device (data for adapter/drive)	
Message Timeout	**5**. Message timeout duration in seconds.
Data Table Address (3)	**N41:0**. Specific starting address of the source file in the drive.
Routing Information File	**RI9:1**. An unused routing information file for the controller.
MultiHop Tab Box	**Setting**
To Address	**10.91.100.79.** The IP address of the adapter connected to the drive.

(1) For details on data table addresses for this example project, see Table 11…Table 14 starting on page 98.

(2) For details to determine element size for a specific drive, see Understanding Controller Data Table Addresses on page 97.

(3) For N-File details, see N-Files on page 192.

Create MicroLogix 1100/1400 Ladder Logic for the Logic Command, Reference, and Datalink In

1. Insert another separate rung.
2. Double-click on the rung to display the rung editor.
3. Enter **MSG MGxx:n**, where:

   xx is an unused data file number (for example, MG12:n), and
   n is an unused element of the data file chosen for xx (for example, MG12:0)

4. Press **Enter**.
5. Insert another separate rung.
6. Double-click on the rung to display the rung editor.
7. Enter **BST XIC MGxx:n/DN NXB XIC MGxx:n/ER BND OTU MGxx:n/EN**, where:

   xx and n must correspond to the assigned data file number and element (for example, MG12:0) for the message created in steps 1…4.

Important: The information must be entered with appropriate numbers for 'xx' and 'n' for your application, and with spaces and forward slashes exactly as shown.

8. Press **Enter**.
9. In the MSG instruction (Figure 17), double-click Setup Screen to launch the message configuration screen (Figure 18).

Figure 17 - MicroLogix 1100/1400 Ladder Logic for the Logic Command, Reference, and Datalink In

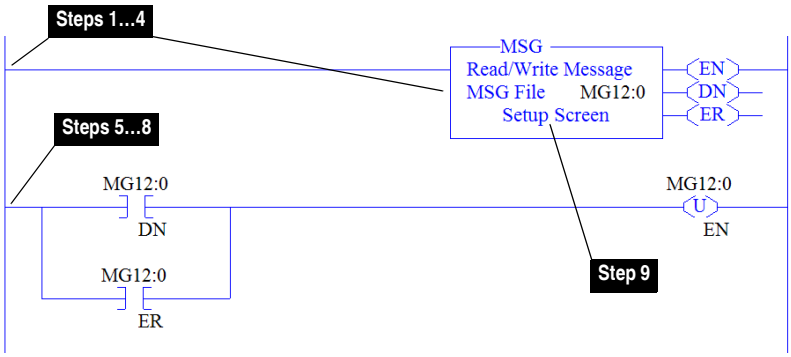

10. Configure the General tab fields by entering or verifying the information shown in the message configuration screen.

Figure 18 - MicroLogix 1100/1400 Message Configuration Screens for the Logic Command, Reference, and Datalink In

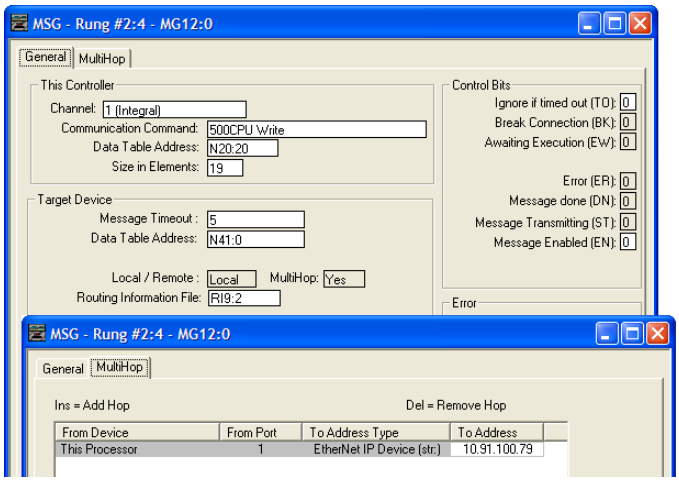

General Tab Box	Setting
This Controller (data for MicroLogix 1100)	
Channel	**1 (integral)**. Controller port to which the network is connected.
Communication Command	**500CPU Write**. The controller type and command type for the controller to read or write data. Because the MicroLogix 1100 is part of the SLC-500 controller family, the '500CPU' controller type was selected. The 'Write' command type was selected to write data to the drive.
Data Table Address (1)	**N20:20**. An unused controller data table address containing the data to be written to the drive.
Size in Elements (2)	**19**. Number of elements (words) to be transferred. Each element size is a 16-bit integer.
Target Device (data for adapter/drive)	
Message Timeout	**5**. Message timeout duration in seconds.
Data Table Address (3)	**N41:0**. Specific starting address of the destination file in the drive.
Routing Information File	**RI9:2**. An unused routing information file for the controller.
MultiHop Tab Box	**Setting**
To Address	**10.91.100.79.** The IP address of the adapter connected to the drive.

(1) For details on data table addresses for this example project, see Table 11…Table 14 starting on page 98.

(2) For details to determine element size for a specific drive, see Understanding Controller Data Table Addresses on page 97.

(3) For N-File details, see N-Files on page 192.

TIP This message will error out if the Control Timeout value is not changed from a non-zero value. Refer to page 71 for writing a value to the Control Timeout.

TIP If the controller is controlling more than one drive, it is recommended to intersperse the control I/O messaging for each drive to conserve network bandwidth and decrease response time. That is, sequence the message instructions for each drive so that its group of messages will occur at a different time than those for another drive.

Notes:

Using the I/O

This chapter provides information and examples that explain how to control, configure, and monitor a PowerFlex 7-Class drive or SMC using the configured I/O.

Topic	Page
About I/O Messaging	79
Understanding the I/O Image	80
Using Logic Command/Status	84
Using Reference/Feedback	84
Using Datalinks	86
Example Ladder Logic Program Information	87
ControlLogix Controller Example	88

ATTENTION: Risk of injury or equipment damage exists. The examples in this publication are intended solely for purposes of example. There are many variables and requirements with any application. Rockwell Automation, Inc. does not assume responsibility or liability (to include intellectual property liability) for actual use of the examples shown in this publication.

About I/O Messaging

On CIP-based networks, including EtherNet/IP, I/O connections are used to transfer the data which controls the PowerFlex drive or SMC and sets its Reference. I/O can also be used to transfer data to and from Datalinks.

The adapter provides many options for configuring and using I/O, including the following:

- Configuring the size of I/O by enabling or disabling the Logic Command/Reference and Datalinks.
- Setting a Master-Slave or Peer-to-Peer hierarchy.

Chapter 3, Configuring the Adapter, and Chapter 4, Configuring the I/O, discuss how to configure the adapter and controller on the network for these options. The defines the different options. This chapter discusses how to use I/O after you have configured the adapter and controller.

Understanding the I/O Image

The terms 'input' and 'output' are defined from the controller's point of view. Therefore, output I/O is data that is produced by the controller and consumed by the adapter. Input I/O is status data that is produced by the adapter and consumed as input by the controller. The I/O image will vary based on the following:

- Size (either 16-bit or 32-bit) of the Reference/Feedback words and Datalink words used by the device. To determine the size of the Reference/Feedback and Datalinks, view adapter **Parameters 20 - [Ref/Fdbk Size]** and **21- [Datalink Size]**. For information to access parameters, see Using the PowerFlex 7-Class HIM on page 28.

- Configuration of I/O (**Parameter 25 - [DPI I/O Cfg]**). If all I/O is not enabled, the image is truncated. The image always uses consecutive words starting at word 0.

- **ControlLogix/CompactLogix Controllers only**—The drive profile used in RSLogix 5000 software (device Add-on Profile in version 16.00 or later, Classic Profile in versions 13.00...15.00, or Generic Profile in all versions).

ControlLogix Controller Image

Since the device Add-on Profile in RSLogix 5000 software, version 16.00 or later, and the Classic Profile, versions 13.00...15.00, provide descriptive controller tags, the I/O image (tag size and location) is automatically configured based on the device being used. When using the Generic Profile (page 62) in RSLogix 5000 software, however, controller tags are not descriptive or defined.

The ControlLogix controller I/O image changes depending on the size of the device's Reference/Feedback and Datalinks. Table , Table , and Table show the I/O image when using various PowerFlex 7-Class drives, and all Datalinks enabled.

Table 5 - ControlLogix Controller I/O Image for Devices with 16-bit Reference/ Feedback and 16-bit Datalinks – Using Generic Profile

These products include the following:

- PowerFlex 70 drives with standard or enhanced control
- PowerFlex 700 drives with standard control
- PowerFlex 700H drives
- SMC Flex smart motor controllers
- SMC-50 smart motor controllers

Word	Output I/O
0	Logic Command
1	Reference
2	Datalink In A1
3	Datalink In A2
4	Datalink In B1
5	Datalink In B2
6	Datalink In C1
7	Datalink In C2
8	Datalink In D1
9	Datalink In D2

Word	Input I/O
0	Pad Word
1	Pad Word
2	Logic Status
3	Feedback
4	Datalink Out A1
5	Datalink Out A2
6	Datalink Out B1
7	Datalink Out B2
8	Datalink Out C1
9	Datalink Out C2
10	Datalink Out D1
11	Datalink Out D2

Table 6 - ControlLogix Controller I/O Image for Devices with 16-bit Reference/ Feedback and 32-bit Datalinks – Using Generic Profile

These products include the following:

- PowerFlex 700 drives with vector control
- PowerFlex 700L drives with 700 control
- PowerFlex Digital DC drives
- SMC-50 smart motor controllers

Word	Output I/O
0	Logic Command
1	Reference
2	Datalink In A1 (LSW)
3	Datalink In A1 (MSW)
4	Datalink In A2 (LSW)
5	Datalink In A2 (MSW)
6	Datalink In B1 (LSW)
7	Datalink In B1 (MSW)
8	Datalink In B2 (LSW)
9	Datalink In B2 (MSW)
10	Datalink In C1 (LSW)
11	Datalink In C1 (MSW)
12	Datalink In C2 (LSW)
13	Datalink In C2 (MSW)
14	Datalink In D1 (LSW)
15	Datalink In D1 (MSW)
16	Datalink In D2 (LSW)
17	Datalink In D2 (MSW)

Word	Input I/O
0	Pad Word
1	Pad Word
2	Logic Status
3	Feedback
4	Datalink Out A1 (LSW)
5	Datalink Out A1 (MSW)
6	Datalink Out A2 (LSW)
7	Datalink Out A2 (MSW)
8	Datalink Out B1 (LSW)
9	Datalink Out B1 (MSW)
10	Datalink Out B2 (LSW)
11	Datalink Out B2 (MSW)
12	Datalink Out C1 (LSW)
13	Datalink Out C1 (MSW)
14	Datalink Out C2 (LSW)
15	Datalink Out C2 (MSW)
16	Datalink Out D1 (LSW)
17	Datalink Out D1 (MSW)
18	Datalink Out D2 (LSW)
19	Datalink Out D2 (MSW)

Table 7 - ControlLogix Controller I/O Image for Drives with 32-bit Reference/ Feedback and 32-bit Datalinks – Using Generic Profile

These products include the following:

- PowerFlex 700S drives with Phase I or Phase II control
- PowerFlex 700L drives with 700S control
- PowerFlex 753 drives
- PowerFlex 755 drives

Word	Output I/O
0	Logic Command
1	Not Used
2	Reference (LSW)
3	Reference (MSW)
4	Datalink In A1 (LSW)
5	Datalink In A1 (MSW)
6	Datalink In A2 (LSW)
7	Datalink In A2 (MSW)
8	Datalink In B1 (LSW)
9	Datalink In B1 (MSW)
10	Datalink In B2 (LSW)
11	Datalink In B2 (MSW)
12	Datalink In C1 (LSW)
13	Datalink In C1 (MSW)
14	Datalink In C2 (LSW)
15	Datalink In C2 (MSW)
16	Datalink In D1 (LSW)
17	Datalink In D1 (MSW)
18	Datalink In D2 (LSW)
19	Datalink In D2 (MSW)

Word	Input I/O
0	Pad Word
1	Pad Word
2	Logic Status
3	Not Used
4	Feedback (LSW)
5	Feedback (MSW)
6	Datalink Out A1 (LSW)
7	Datalink Out A1 (MSW)
8	Datalink Out A2 (LSW)
9	Datalink Out A2 (MSW)
10	Datalink Out B1 (LSW)
11	Datalink Out B1 (MSW)
12	Datalink Out B2 (LSW)
13	Datalink Out B2 (MSW)
14	Datalink Out C1 (LSW)
15	Datalink Out C1 (MSW)
16	Datalink Out C2 (LSW)
17	Datalink Out C2 (MSW)
18	Datalink Out D1 (LSW)
19	Datalink Out D1 (MSW)
20	Datalink Out D2 (LSW)
21	Datalink Out D2 (MSW)

MicroLogix 1100/1400 Controller Image

The I/O image for these controllers always has 19 words of output and 19 words of input. However, depending on the size of the device's Reference/Feedback and Datalinks, specific words in the I/O image may not be used. Table 8, Table 9, and Table 10 show the I/O image when using various PowerFlex 7-Class drives, and all Datalinks enabled.

Table 8 - MicroLogix 1100/1400 I/O Image for PowerFlex 70/ 700/700H Drives and SMC Flex (16-bit Reference/Feedback and 16-bit Datalinks)

Word	Output I/O
0	Logic Command
1	Not used
2	Reference (MSW)
3	Not used
4	Datalink In A1 (MSW)
5	Not used
6	Datalink In A2 (MSW)
7	Not used
8	Datalink In B1 (MSW)
9	Not used
10	Datalink In B2 (MSW)
11	Not used
12	Datalink In C1 (MSW)
13	Not used
14	Datalink In C2 (MSW)
15	Not used
16	Datalink In D1 (MSW)
17	Not used
18	Datalink In D2 (MSW)

Word	Input I/O
0	Logic Status
1	Not used
2	Feedback (MSW)
3	Not used
4	Datalink Out A1 (MSW)
5	Not used
6	Datalink Out A2 (MSW)
7	Not used
8	Datalink Out B1 (MSW)
9	Not used
10	Datalink Out B2 (MSW)
11	Not used
12	Datalink Out C1 (MSW)
13	Not used
14	Datalink Out C2 (MSW)
15	Not used
16	Datalink Out D1 (MSW)
17	Not used
18	Datalink Out D2 (MSW)

Table 9 - MicroLogix 1100/1400 I/O Image for PowerFlex 700 VC Drives and SMC-50 Controllers (16-bit Reference/Feedback and 32-bit Datalinks)

Word	Output I/O
0	Logic Command
1	Not used
2	Reference (MSW)
3	Datalink In A1 (LSW)
4	Datalink In A1 (MSW)
5	Datalink In A2 (LSW)
6	Datalink In A2 (MSW)
7	Datalink In B1 (LSW)
8	Datalink In B1 (MSW)
9	Datalink In B2 (LSW)
10	Datalink In B2 (MSW)
11	Datalink In C1 (LSW)
12	Datalink In C1 (MSW)
13	Datalink In C2 (LSW)
14	Datalink In C2 (MSW)
15	Datalink In D1 (LSW)
16	Datalink In D1 (MSW)
17	Datalink In D2 (LSW)
18	Datalink In D2 (MSW)

Word	Input I/O
0	Logic Status
1	Not used
2	Feedback (MSW)
3	Datalink Out A1 (LSW)
4	Datalink Out A1 (MSW)
5	Datalink Out A2 (LSW)
6	Datalink Out A2 (MSW)
7	Datalink Out B1 (LSW)
8	Datalink Out B1 (MSW)
9	Datalink Out B2 (LSW)
10	Datalink Out B2 (MSW)
11	Datalink Out C1 (LSW)
12	Datalink Out C1 (MSW)
13	Datalink Out C2 (LSW)
14	Datalink Out C2 (MSW)
15	Datalink Out D1 (LSW)
16	Datalink Out D1 (MSW)
17	Datalink Out D2 (LSW)
18	Datalink Out D2 (MSW)

Table 10 - MicroLogix 1100/1400 I/O Image for PowerFlex 700S Series Drives (32-bit Reference/Feedback and 32-bit Datalinks)

Word	Output I/O
0	Logic Command
1	Reference (LSW)
2	Reference (MSW)
3	Datalink In A1 (LSW)
4	Datalink In A1 (MSW)
5	Datalink In A2 (LSW)
6	Datalink In A2 (MSW)
7	Datalink In B1 (LSW)
8	Datalink In B1 (MSW)
9	Datalink In B2 (LSW)
10	Datalink In B2 (MSW)
11	Datalink In C1 (LSW)
12	Datalink In C1 (MSW)
13	Datalink In C2 (LSW)
14	Datalink In C2 (MSW)
15	Datalink In D1 (LSW)
16	Datalink In D1 (MSW)
17	Datalink In D2 (LSW)
18	Datalink In D2 (MSW)

Word	Input I/O
0	Logic Status
1	Feedback (LSW)
2	Feedback (MSW)
3	Datalink Out A1 (LSW)
4	Datalink Out A1 (MSW)
5	Datalink Out A2 (LSW)
6	Datalink Out A2 (MSW)
7	Datalink Out B1 (LSW)
8	Datalink Out B1 (MSW)
9	Datalink Out B2 (LSW)
10	Datalink Out B2 (MSW)
11	Datalink Out C1 (LSW)
12	Datalink Out C1 (MSW)
13	Datalink Out C2 (LSW)
14	Datalink Out C2 (MSW)
15	Datalink Out D1 (LSW)
16	Datalink Out D1 (MSW)
17	Datalink Out D2 (LSW)
18	Datalink Out D2 (MSW)

Using Logic Command/ Status

The Logic Command is a 16-bit word of control data produced by the scanner and consumed by the adapter. The Logic Status is a 16-bit word of status data produced by the adapter and consumed by the scanner.

This manual contains the bit definitions for most compatible products available at the time of publication in Appendix D, Logic Command/Status Words. For other products, see their documentation.

Using Reference/Feedback

The Reference is produced by the controller and consumed by the adapter. The Feedback is produced by the adapter and consumed by the controller. The size of the Reference/Feedback is determined by the drive and displayed using adapter **Parameter 20 - [Ref/Fdbk Size]**.

Size	Valid Values
16-bit	-32768 to 32767
32-bit	-2147483648 to 2147483647

When the Reference and Feedback are enabled and a ControlLogix controller with a device Add-on Profile or Classic Profile is used, specific controller tags are automatically created, sized (16-bit or 32-bit), and placed in the I/O image.

PowerFlex 7-Class Drives

The Reference value is an unscaled value; it is NOT in Hertz or RPM. The Reference uses a '32767' scale. The '32767' endpoint of the scale is equal to the value of drive parameter 55 - [Maximum Freq], which has a default value of 130 Hz. For all PowerFlex 70/700 drives, default scaling is 0...15123 which is equal to 0...60.0 Hz. This is based on the formula shown below. Reference scaling is limited by drive parameter 82 - [Maximum Speed]. If the default value of 60 Hz. for parameter 82 - [Maximum Speed] is changed, the speed Reference scaling also changes. To determine Reference scaling, use the following formula:

(Parameter 82 ÷ Parameter 55) * 32767 = Scaling

Using drive parameter 82 and 55 default values, speed Reference scaling is:

(60 Hz ÷ 130 Hz) * 32767 = 15123

Therefore, 0...15123 = 0...60.0 Hz.

If parameter 82 - [Maximum Speed] is changed to 90 Hz, then:

(90 Hz ÷ 130 Hz) * 32767 = 22685

Therefore, 0...22685 = 0...90.0 Hz.

A graphic representation of this Reference scaling is shown below.

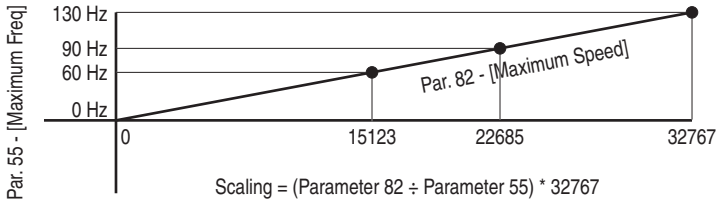

For PowerFlex 70 EC drives, firmware 2.xxx or later, or PowerFlex 700 VC drives, firmware 3.xxx or later, drive parameter 298 - [DPI Ref Select] was added to simplify scaling for the speed Reference. When drive parameter 298 - [DPI Ref Select] is set to its default '0' (Max Freq), the speed Reference scaling is as shown above. However, when parameter 298 - [DPI Ref Select] is set to '1' (Max Speed), the speed Reference scaling is equal to parameter 82 - [Max Speed]:

Parameter 82 = Scaling

Using the parameter 82 default value, speed Reference scaling is:

0...32767 = 0...60.0 Hz.

If parameter 82 - [Maximum Speed] is changed to 90 Hz, then:

90 Hz = 32767

Speed Feedback uses the same scaling as the speed Reference.

TIP For PowerFlex 700 VC drives, firmware 3.xxx or later, parameter 299 - [DPI Fdbk Select] enables you to select the feedback data coming from the drive over DPI. The default is 'Speed Fdbk' in Hz or RPM determined by parameter 079 - [Speed Units]. The data selection for parameter 299 is also displayed on the 1st line of the HIM and on DriveExplorer and DriveExecutive software screens in the drive status area of the screen.

The controller in the system sends a reference to the SMC, but it is not used for control purposes in the current release.

The SMC products use the feedback to send motor current information.

Using Datalinks

A Datalink is a mechanism used by PowerFlex drives and SMCs to transfer data to and from the controller. Datalinks allow a device parameter value to be read or written without using an Explicit Message. When enabled, each Datalink occupies two 16-bit or 32-bit words in both the input and output image. Use adapter **Parameter 21 - [Datalink Size]** to determine whether the drive uses 16-bit or 32-bit words for Datalinks.

Rules for Using Datalinks

- Each set of Datalink parameters in a device can be used by only one adapter. If more than one adapter is connected to a single device, multiple adapters cannot use the same Datalink.
- Parameter settings in the device determine the data passed through the Datalink mechanism. See the documentation for your device.
- When you use a Datalink to change a value, the value is NOT written to the Nonvolatile Storage (NVS). The value is stored in volatile memory and lost when the device loses power. Therefore, use Datalinks when you need to change a value of a parameter frequently.

Using 16-Bit Datalinks to Read/Write 32-Bit Parameters

This subsection only pertains to the SMC Flex and PowerFlex 70 (SC or EC), PowerFlex 700 (SC), and PowerFlex 700H drives which use 16-bit Datalinks. To read or write a 32-bit parameter using 16-bit Datalinks, typically both Datalinks of a pair (A, B, C, D) are set to the same 32-bit parameter. For example, to read parameter 10 - [Elapsed Run Time] in a PowerFlex 70 drive, both Datalink A1 Out (Parameter 310) and Datalink A2 Out (Parameter 311) are set to '10'. Datalink A1 Out will contain the least significant word (LSW) and Datalink A2 Out will contain the most significant word (MSW).

32-bit data is stored in binary as follows:

MSW	2^{31} through 2^{16}
LSW	2^{15} through 2^{0}

In this example, the parameter 10 - [Elapsed Run Time] value of 6553.9 Hrs is read as '6553.9' in Datalink A1 Out (Parameter 310) and Datalink A2 Out (Parameter 311).

Datalink	Word	Parameter	Data (Hex)
A1 Out	LSW	10	0003
A2 Out	MSW	10	0001

Conversion Example:

Parameter 010 - [Elapsed Run Time] = 6553.9 Hrs
MSW = $0001_{hex} = 0001_{binary} = 2^{16} = 65536$
LSW = 0003_{hex} =3
Engineering Value = 65536 + 3 = 65539
Parameter 10 Displayed Value = 6553.9 Hrs

Regardless of the Datalink combination, Datalink x1 Out will always contain the LSW and Datalink x2 Out will always contain the MSW. In the following example, the PowerFlex 70 drive parameter 242 - [Power Up Marker] contains a value of 88.4541 hours.

Datalink	Word	Parameter	Data (Hex)
A2 Out	MSW	242	000D
B1 Out	LSW	242	7F3D

Conversion Example:

Parameter 242 - [Power Up Marker] = 88.4541 hours
MSW = $000D_{hex} = 1101_{binary} = 2^{19} + 2^{18} + 2^{16} = 851968$
LSW = $7F3D_{hex} = 32573$
Engineering Value = 851968 + 32573 = 884541
Parameter 242 Displayed Value = 88.4541 Hrs

Example Ladder Logic Program Information

The example ladder logic programs in the sections of this chapter are intended for and operate PowerFlex 7-Class drives and SMC Flex controllers.

Functions of the Example Programs

The example programs enable you to do the following:

- Receive Logic Status information from the drive.
- Send a Logic Command to control the drive (for example, start, stop).
- Send a Reference to the drive and receive Feedback from the drive.
- Send/receive Datalink data to/from the drive.

Logic Command/Status Words

These examples use the Logic Command word and Logic Status word for PowerFlex 70/700 drives. See Appendix D to view details. The definition of the bits in these words may vary if you are using a different DPI device. See the documentation for your device.

ControlLogix Controller Example

Creating Ladder Logic Using the RSLogix 5000 Device Add-on Profiles, Version 16.00 or Later

Because the device Add-on Profile automatically created descriptive controller tags (Figure 9) for the entire I/O image in Chapter 4, you can use these tags to directly control and monitor the device without creating any ladder logic program. However, if you intend to use Human Machine Interface devices (PanelView, and so forth) to operate the device and view its status, you will need to create descriptive user-defined Program tags (Figure 19) and a ladder logic program that will pass the Controller tag data to the Program tags.

Figure 19 - ControlLogix Program Tags for Device Add-on Profile Ladder Logic Program Example

Name	Style	Data Type
Command_Clear_Faults	Decimal	BOOL
Command_Forward_Reverse	Decimal	BOOL
Command_Jog	Decimal	BOOL
Command_Start	Decimal	BOOL
Command_Stop	Decimal	BOOL
+ Speed_Feedback	Decimal	DINT
+ Speed_Reference	Decimal	DINT
Status_Active	Decimal	BOOL
Status_At_Speed	Decimal	BOOL
Status_Faulted	Decimal	BOOL
Status_Forward	Decimal	BOOL
Status_Ready	Decimal	BOOL
Status_Reverse	Decimal	BOOL

An example ladder logic program that uses the automatically created descriptive Controller tags and passes their data to the user-defined Program tags is shown in Figure 20 and Figure 21. Note that the prefix for the device Controller tags is determined by the name assigned when configuring the I/O (Chapter 4).

Figure 20 - ControlLogix Example Ladder Logic Program Using a Device Add-on Profile for Logic Status/Feedback

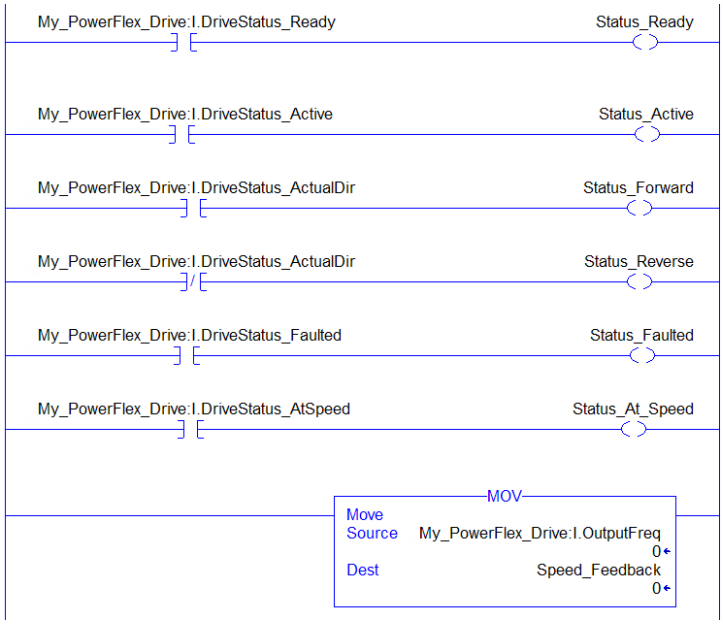

Figure 21 - ControlLogix Example Ladder Logic Program Using a Device Add-on Profile for Logic Command/Reference

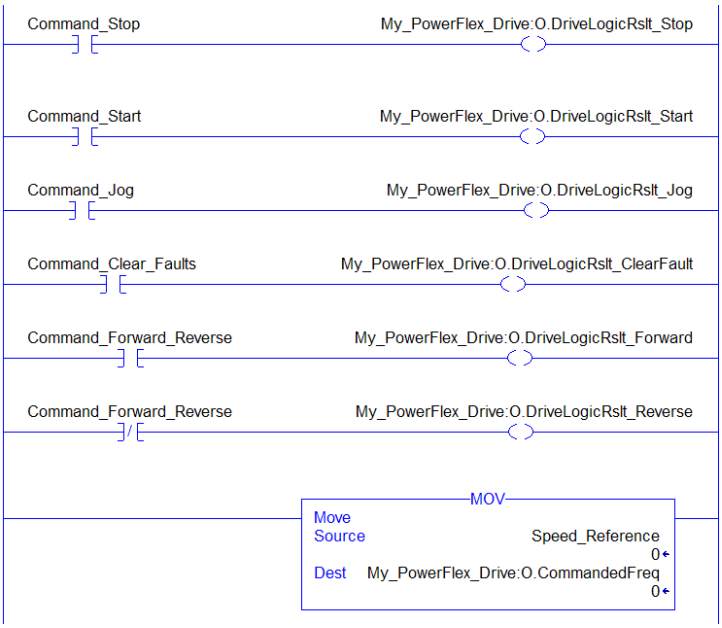

Creating Ladder Logic Using the RSLogix 5000 Classic Profile, Versions 1300…15.00

Since the RSLogix 5000 Classic Profile has been significantly improved upon by RSLogix 5000 device Add-on Profiles, version 16.00 or later, we highly

recommended using the RSLogix 5000 device Add-on Profiles to take advantage of their benefits (more intuitive, time saving, and less likely to make ladder logic program errors).

Creating Ladder Logic Using the RSLogix 5000 Generic Profile, All Versions

Drive and Adapter Parameter Settings

The following drive and adapter settings were used for the example ladder logic program in this section.

Device	Parameter	Value	Description
PowerFlex 70 EC Drive	90 - [Speed Ref A Sel]	22 (DPI Port 5)	Assigns 20-COMM-ER to be used for the Reference.
	300 - [Data In A1]	140	Points to Par. 140 - [Accel Time 1]
	301 - [Data In A2]	142	Points to Par. 142 - [Decel Time 1]
	302 - [Data In B1]	100	Points to Par. 100 - [Jog Speed]
	303 - [Data In B2]	155	Points to Par. 155 - [Stop Mode A]
	304 - [Data In C1]	101	Points to Par. 101 - [Preset Speed 1]
	305 - [Data In C2]	102	Points to Par. 102 - [Preset Speed 2]
	306 - [Data In D1]	103	Points to Par. 103 - [Preset Speed 3]
	307 - [Data In D2]	104	Points to Par. 104 - [Preset Speed 4]
	310 - [Data Out A1]	140	Points to Par. 140 - [Accel Time 1]
	311 - [Data Out A2]	142	Points to Par. 142 - [Decel Time 1]
	312 - [Data Out B1]	100	Points to Par. 100 - [Jog Speed]
	313 - [Data Out B2]	155	Points to Par. 155 - [Stop Mode A]
	314 - [Data Out C1]	101	Points to Par. 101 - [Preset Speed 1]
	315 - [Data Out C2]	102	Points to Par. 102 - [Preset Speed 2]
	316 - [Data Out D1]	103	Points to Par. 103 - [Preset Speed 3]
	317 - [Data Out D2]	104	Points to Par. 104 - [Preset Speed 4]
20-COMM-ER Adapter	04 - [IP Addr Cfg 1] ⋮ 07 - [IP Addr Cfg 4]	10.91.100.79	IP address for the adapter.
	08 - [Subnet Cfg 1] ⋮ 11 - [Subnet Cfg 4]	255.255.248.0	Subnet mask for the adapter.
	23 - [DPI I/O Cfg]	xxx1 1111	Enables Cmd/Ref and Datalinks A…D.
	35 - [M-S Input]	xxx1 1111	Configures the I/O Data to be transferred from the controller on the network to the drive.
	36 - [M-S Output]	xxx1 1111	Configures the I/O Data to be transferred from the drive to the controller on the network.

TIP Data In parameters are inputs into the device that come from controller outputs (for example, data to write to a device parameter). Data Out parameters are outputs from the device that go to controller inputs (for example, data to read a device parameter).

Controller Tags

When you add the adapter and drive to the I/O configuration (Chapter 4), RSLogix 5000 software automatically creates generic (non-descriptive) controller tags for them. In this example program, the following controller tags are used.

Figure 22 - ControlLogix Controller Tags for Drive Generic Profile Example Ladder Logic Program

Name	Data Type	Description
My_PowerFlex_Drive:C	AB:ETHER...	
My_PowerFlex_Drive:I	AB:ETHER...	
My_PowerFlex_Drive:O	AB:ETHER...	

You can expand the Input and Output tags to reveal the input and output configuration.

Figure 23 - ControlLogix Input Image for Drive Generic Profile Example Ladder Logic Program

Name	Data Type	Description
My_PowerFlex_Drive:I	AB:ETHER...	
My_PowerFlex_Drive:I.Data	INT[12]	Input Image
My_PowerFlex_Drive:I.Data[0]	INT	Pad Word
My_PowerFlex_Drive:I.Data[1]	INT	Pad Word
My_PowerFlex_Drive:I.Data[2]	INT	Logic Status
My_PowerFlex_Drive:I.Data[3]	INT	Speed Feedback
My_PowerFlex_Drive:I.Data[4]	INT	Datalink Out A1
My_PowerFlex_Drive:I.Data[5]	INT	Datalink Out A2
My_PowerFlex_Drive:I.Data[6]	INT	Datalink Out B1
My_PowerFlex_Drive:I.Data[7]	INT	Datalink Out B2
My_PowerFlex_Drive:I.Data[8]	INT	Datalink Out C1
My_PowerFlex_Drive:I.Data[9]	INT	Datalink Out C2
My_PowerFlex_Drive:I.Data[10]	INT	Datalink Out D1
My_PowerFlex_Drive:I.Data[11]	INT	Datalink Out D2

PowerFlex 70 Drive
16-bit Speed Feedback and Datalinks

Name	Data Type	Description
My_PowerFlex_Drive:I	AB:ETHER...	
My_PowerFlex_Drive:I.Data	INT[22]	Input Image
My_PowerFlex_Drive:I.Data[0]	INT	Pad Word
My_PowerFlex_Drive:I.Data[1]	INT	Pad Word
My_PowerFlex_Drive:I.Data[2]	INT	Logic Status
My_PowerFlex_Drive:I.Data[3]	INT	Not Used
My_PowerFlex_Drive:I.Data[4]	INT	FeedBack (LSW)
My_PowerFlex_Drive:I.Data[5]	INT	Feedback (MSW)
My_PowerFlex_Drive:I.Data[6]	INT	Datalink Out A1 (LSW)
My_PowerFlex_Drive:I.Data[7]	INT	Datalink Out A1 (MSW)
My_PowerFlex_Drive:I.Data[8]	INT	Datalink Out A2 (LSW)
My_PowerFlex_Drive:I.Data[9]	INT	Datalink Out A2 (MSW)
My_PowerFlex_Drive:I.Data[10]	INT	Datalink Out B1 (LSW)
My_PowerFlex_Drive:I.Data[11]	INT	Datalink Out B1 (MSW)
My_PowerFlex_Drive:I.Data[12]	INT	Datalink Out B2 (LSW)
My_PowerFlex_Drive:I.Data[13]	INT	Datalink Out B2 (MSW)
My_PowerFlex_Drive:I.Data[14]	INT	Datalink Out C1 (LSW)
My_PowerFlex_Drive:I.Data[15]	INT	Datalink Out C1 (MSW)
My_PowerFlex_Drive:I.Data[16]	INT	Datalink Out C2 (LSW)
My_PowerFlex_Drive:I.Data[17]	INT	Datalink Out C2 (MSW)
My_PowerFlex_Drive:I.Data[18]	INT	Datalink Out D1 (LSW)
My_PowerFlex_Drive:I.Data[19]	INT	Datalink Out D1 (MSW)
My_PowerFlex_Drive:I.Data[20]	INT	Datalink Out D2 (LSW)
My_PowerFlex_Drive:I.Data[21]	INT	Datalink Out D2 (MSW)

PowerFlex 700S-Series Drive
32-bit Speed Feedback and Datalinks

Figure 24 - ControlLogix Output Image for Drive Generic Profile Example Ladder Logic Program

Name	Data Type	Description
My_PowerFlex_Drive:O	AB:ETHER...	
My_PowerFlex_Drive:O.Data	INT[10]	Output Image
My_PowerFlex_Drive:O.Data[0]	INT	Logic Command
My_PowerFlex_Drive:O.Data[1]	INT	Speed Reference
My_PowerFlex_Drive:O.Data[2]	INT	Datalink In A1
My_PowerFlex_Drive:O.Data[3]	INT	Datalink In A2
My_PowerFlex_Drive:O.Data[4]	INT	Datalink In B1
My_PowerFlex_Drive:O.Data[5]	INT	Datalink In B2
My_PowerFlex_Drive:O.Data[6]	INT	Datalink In C1
My_PowerFlex_Drive:O.Data[7]	INT	Datalink In C2
My_PowerFlex_Drive:O.Data[8]	INT	Datalink In D1
My_PowerFlex_Drive:O.Data[9]	INT	Datalink In D2

PowerFlex 70 Drive
16-bit Speed Reference and Datalinks

Name	Data Type	Description
My_PowerFlex_Drive:O	AB:ETHER...	
My_PowerFlex_Drive:O.Data	INT[20]	Output Image
My_PowerFlex_Drive:O.Data[0]	INT	Logic Command
My_PowerFlex_Drive:O.Data[1]	INT	Not Used
My_PowerFlex_Drive:O.Data[2]	INT	Reference (LSW)
My_PowerFlex_Drive:O.Data[3]	INT	Reference (MSW)
My_PowerFlex_Drive:O.Data[4]	INT	Datalink In A1 (LSW)
My_PowerFlex_Drive:O.Data[5]	INT	Datalink In A1 (MSW)
My_PowerFlex_Drive:O.Data[6]	INT	Datalink In A2 (LSW)
My_PowerFlex_Drive:O.Data[7]	INT	Datalink In A2 (MSW)
My_PowerFlex_Drive:O.Data[8]	INT	Datalink In B1 (LSW)
My_PowerFlex_Drive:O.Data[9]	INT	Datalink In B1 (MSW)
My_PowerFlex_Drive:O.Data[10]	INT	Datalink In B2 (LSW)
My_PowerFlex_Drive:O.Data[11]	INT	Datalink In B2 (MSW)
My_PowerFlex_Drive:O.Data[12]	INT	Datalink In C1 (LSW)
My_PowerFlex_Drive:O.Data[13]	INT	Datalink In C1 (MSW)
My_PowerFlex_Drive:O.Data[14]	INT	Datalink In C2 (LSW)
My_PowerFlex_Drive:O.Data[15]	INT	Datalink In C2 (MSW)
My_PowerFlex_Drive:O.Data[16]	INT	Datalink In D1 (LSW)
My_PowerFlex_Drive:O.Data[17]	INT	Datalink In D1 (MSW)
My_PowerFlex_Drive:O.Data[18]	INT	Datalink In D2 (LSW)
My_PowerFlex_Drive:O.Data[19]	INT	Datalink In D2 (MSW)

PowerFlex 700S-Series Drive
32-bit Speed Reference and Datalinks

Program Tags

To use the Controller tags that are automatically created, you need to create the following Program tags for this example program.

Figure 25 - ControlLogix Program Tags for Drive Generic Profile Example Ladder Logic Program

Name	Style	Data Type
Command_Clear_Faults	Decimal	BOOL
Command_Forward_Reverse	Decimal	BOOL
Command_Jog	Decimal	BOOL
Command_Start	Decimal	BOOL
Command_Stop	Decimal	BOOL
Speed_Feedback	Decimal	DINT
Speed_Reference	Decimal	DINT
Status_Active	Decimal	BOOL
Status_At_Speed	Decimal	BOOL
Status_Faulted	Decimal	BOOL
Status_Forward	Decimal	BOOL
Status_Ready	Decimal	BOOL
Status_Reverse	Decimal	BOOL

For information on speed Reference and Feedback scaling, see PowerFlex 7-Class Drives on page 85.

Figure 26 - ControlLogix Example Ladder Logic Program Using a Drive Generic Profile for Logic Status/Feedback

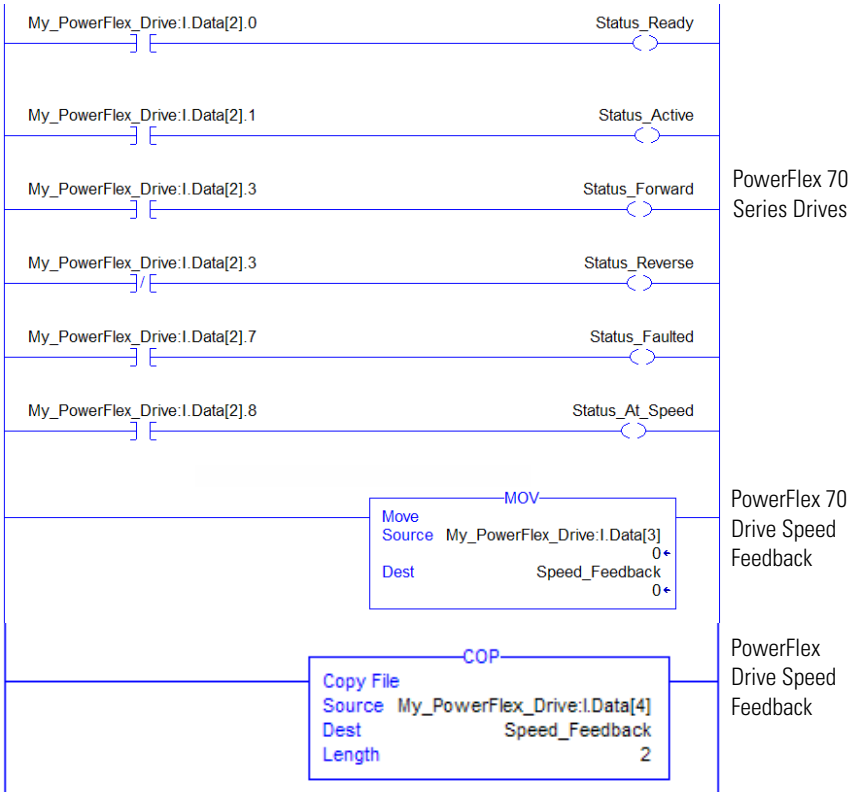

Figure 27 - ControlLogix Example Ladder Logic Program Using a Drive Generic Profile for Logic Command/Reference

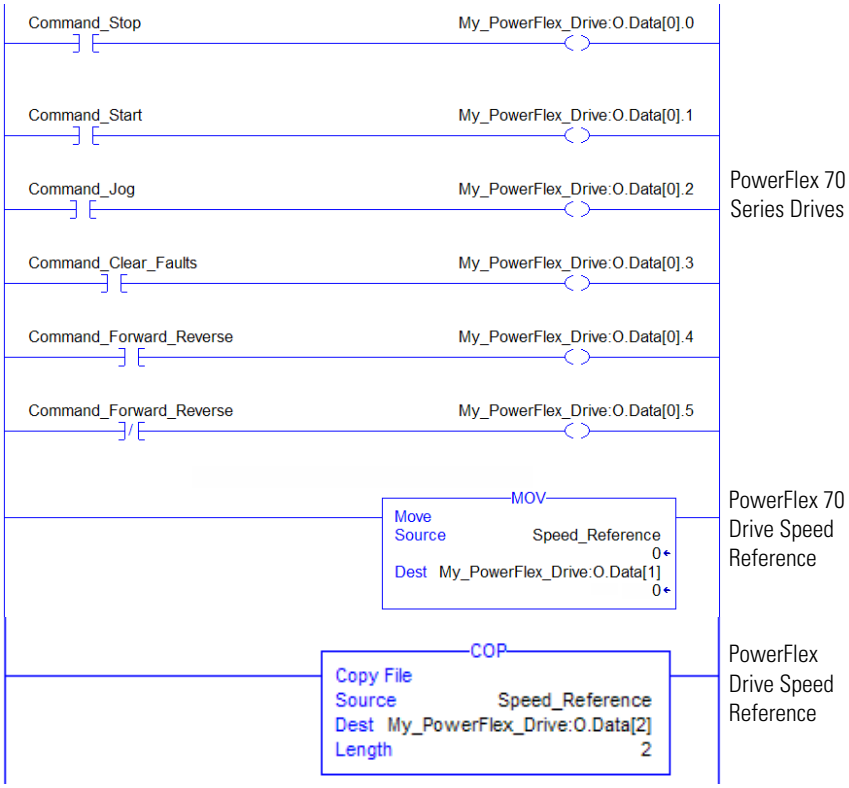

Example Datalink Data

The Datalink data used in the example program is shown in Figure 28. Note that to describe the parameters to which the Datalinks are assigned, you may want to add descriptions to the automatically-created generic controller tags or create a User Defined Data Types (UDDT).

Figure 28 - ControlLogix Example Datalinks for Ladder Logic Program Using a Drive Generic Profile

Name	Value	Data Type	Description
My_PowerFlex_Drive:I	{...}	AB:ETHER...	
My_PowerFlex_Drive:I.Data	{...}	INT[12]	Input Image
My_PowerFlex_Drive:I.Data[0]	0	INT	Pad Word
My_PowerFlex_Drive:I.Data[1]	0	INT	Pad Word
My_PowerFlex_Drive:I.Data[2]	0	INT	Logic Status
My_PowerFlex_Drive:I.Data[3]	0	INT	Speed Feedback
My_PowerFlex_Drive:I.Data[4]	50	INT	Datalink Out A1
My_PowerFlex_Drive:I.Data[5]	50	INT	Datalink Out A2
My_PowerFlex_Drive:I.Data[6]	100	INT	Datalink Out B1
My_PowerFlex_Drive:I.Data[7]	1	INT	Datalink Out B2
My_PowerFlex_Drive:I.Data[8]	200	INT	Datalink Out C1
My_PowerFlex_Drive:I.Data[9]	300	INT	Datalink Out C2
My_PowerFlex_Drive:I.Data[10]	400	INT	Datalink Out D1
My_PowerFlex_Drive:I.Data[11]	500	INT	Datalink Out D2
My_PowerFlex_Drive:O	{...}	AB:ETHER...	
My_PowerFlex_Drive:O.Data	{...}	INT[10]	Output Image
My_PowerFlex_Drive:O.Data[0]	0	INT	Logic Command
My_PowerFlex_Drive:O.Data[1]	0	INT	Speed Reference
My_PowerFlex_Drive:O.Data[2]	50	INT	Datalink In A1
My_PowerFlex_Drive:O.Data[3]	50	INT	Datalink In A2
My_PowerFlex_Drive:O.Data[4]	100	INT	Datalink In B1
My_PowerFlex_Drive:O.Data[5]	1	INT	Datalink In B2
My_PowerFlex_Drive:O.Data[6]	200	INT	Datalink In C1
My_PowerFlex_Drive:O.Data[7]	300	INT	Datalink In C2
My_PowerFlex_Drive:O.Data[8]	400	INT	Datalink In D1
My_PowerFlex_Drive:O.Data[9]	500	INT	Datalink In D2

PowerFlex 70 Drive

Name	Value	Data Type	Description
My_PowerFlex_Drive:I	{...}	AB:ETHER...	
My_PowerFlex_Drive:I.Data	{...}	INT[22]	Input Image
My_PowerFlex_Drive:I.Data[0]	0	INT	Pad Word
My_PowerFlex_Drive:I.Data[1]	0	INT	Pad Word
My_PowerFlex_Drive:I.Data[2]	1295	INT	Logic Status
My_PowerFlex_Drive:I.Data[3]	0	INT	Not Used
My_PowerFlex_Drive:I.Data[4]	25000	INT	Feedback (LSW)
My_PowerFlex_Drive:I.Data[5]	0	INT	Feedback (MSW)
My_PowerFlex_Drive:I.Data[6]	-26970	INT	Datalink Out A1 (LSW)
My_PowerFlex_Drive:I.Data[7]	17432	INT	Datalink Out A1 (MSW)
My_PowerFlex_Drive:I.Data[8]	15562	INT	Datalink Out A2 (LSW)
My_PowerFlex_Drive:I.Data[9]	5457	INT	Datalink Out A2 (MSW)
My_PowerFlex_Drive:I.Data[10]	0	INT	Datalink Out B1 (LSW)
My_PowerFlex_Drive:I.Data[11]	16840	INT	Datalink Out B1 (MSW)
My_PowerFlex_Drive:I.Data[12]	0	INT	Datalink Out B2 (LSW)
My_PowerFlex_Drive:I.Data[13]	0	INT	Datalink Out B2 (MSW)
My_PowerFlex_Drive:I.Data[14]	0	INT	Datalink Out C1 (LSW)
My_PowerFlex_Drive:I.Data[15]	0	INT	Datalink Out C1 (MSW)
My_PowerFlex_Drive:I.Data[16]	0	INT	Datalink Out C2 (LSW)
My_PowerFlex_Drive:I.Data[17]	0	INT	Datalink Out C2 (MSW)
My_PowerFlex_Drive:I.Data[18]	0	INT	Datalink Out D1 (LSW)
My_PowerFlex_Drive:I.Data[19]	0	INT	Datalink Out D1 (MSW)
My_PowerFlex_Drive:I.Data[20]	0	INT	Datalink Out D2 (LSW)
My_PowerFlex_Drive:I.Data[21]	0	INT	Datalink Out D2 (MSW)
My_PowerFlex_Drive:O	{...}	AB:ETHER...	
My_PowerFlex_Drive:O.Data	{...}	INT[20]	Output Image
My_PowerFlex_Drive:O.Data[0]	0	INT	Logic Command
My_PowerFlex_Drive:O.Data[1]	0	INT	Not Used
My_PowerFlex_Drive:O.Data[2]	25000	INT	Reference (LSW)
My_PowerFlex_Drive:O.Data[3]	0	INT	Reference (MSW)
My_PowerFlex_Drive:O.Data[4]	0	INT	Datalink In A1 (LSW)
My_PowerFlex_Drive:O.Data[5]	16680	INT	Datalink In A1 (MSW)
My_PowerFlex_Drive:O.Data[6]	4430	INT	Datalink In A2 (LSW)
My_PowerFlex_Drive:O.Data[7]	1909	INT	Datalink In A2 (MSW)
My_PowerFlex_Drive:O.Data[8]	-2621	INT	Datalink In B1 (LSW)
My_PowerFlex_Drive:O.Data[9]	16664	INT	Datalink In B1 (MSW)
My_PowerFlex_Drive:O.Data[10]	0	INT	Datalink In B2 (LSW)
My_PowerFlex_Drive:O.Data[11]	0	INT	Datalink In B2 (MSW)

PowerFlex 700S-Series Drive

For PowerFlex 7-Class drives, the scaling may need to be multiplied by 10 or 100, depending on the parameter. For more information, see Using Datalinks on page 86.

MicroLogix 1100/1400 Controller Example

Drive and Adapter Parameter Settings

The following drive and adapter settings were used for the example ladder logic program in this section.

Device	Parameter	Value	Description
PowerFlex 70 EC Drive	90 - [Speed Ref A Sel]	22 (DPI Port 5)	Assigns 20-COMM-ER to be used for the Reference.
	300 - [Data In A1]	140	Points to Par. 140 - [Accel Time 1]
	301 - [Data In A2]	142	Points to Par. 142 - [Decel Time 1]
	302 - [Data In B1]	100	Points to Par. 100 - [Jog Speed]
	303 - [Data In B2]	155	Points to Par. 155 - [Stop Mode A]
	304 - [Data In C1]	101	Points to Par. 101 - [Preset Speed 1]
	305 - [Data In C2]	102	Points to Par. 102 - [Preset Speed 2]
	306 - [Data In D1]	103	Points to Par. 103 - [Preset Speed 3]
	307 - [Data In D2]	104	Points to Par. 104 - [Preset Speed 4]
	310 - [Data Out A1]	140	Points to Par. 140 - [Accel Time 1]
	311 - [Data Out A2]	142	Points to Par. 142 - [Decel Time 1]
	312 - [Data Out B1]	100	Points to Par. 100 - [Jog Speed]
	313 - [Data Out B2]	155	Points to Par. 155 - [Stop Mode A]
	314 - [Data Out C1]	101	Points to Par. 101 - [Preset Speed 1]
	315 - [Data Out C2]	102	Points to Par. 102 - [Preset Speed 2]
	316 - [Data Out D1]	103	Points to Par. 103 - [Preset Speed 3]
	317 - [Data Out D2]	104	Points to Par. 104 - [Preset Speed 4]
20-COMM-ER Adapter	04 - [IP Addr Cfg 1] ⋮ 07 - [IP Addr Cfg 4]	10.91.100.79	IP address for the adapter.
	08 - [Subnet Cfg 1] ⋮ 11 - [Subnet Cfg 4]	255.255.248.0	Subnet mask for the adapter.
	23 - [DPI I/O Cfg]	xxx1 1111	Enables Cmd/Ref and Datalinks A…D.
	35 - [M-S Input]	xxx1 1111	Configures the I/O Data to be transferred from the controller on the network to the drive.
	36 - [M-S Output]	xxx1 1111	Configures the I/O Data to be transferred from the drive to the controller on the network.

TIP Data In parameters are inputs into the drive that come from controller outputs (for example, data to write to a drive parameter). Data Out parameters are outputs from the drive that go to controller inputs (for example, data to read a drive parameter).

TIP When using a drive that has 16-bit Datalinks (PowerFlex 70, PowerFlex 700, and PowerFlex 700H drives) to transfer a 32-bit parameter, two contiguous drive Datalink parameters (for example, Data Out A1/A2, B1/B2, etc.) are required. To determine if a parameter is a 32-bit parameter, see the Parameter section in the drive documentation and look for a 32 symbol in the 'No.' column. (All parameters in PowerFlex 700 Series B drives are 32-bit parameters.) For example, parameter 3 - [Output Current] in a PowerFlex 70 EC drive is a 32-bit parameter. When using a drive that has 32-bit Datalinks (PowerFlex 700 VC and PowerFlex 700S), only one drive Datalink parameter is required to transfer any parameter.

Understanding Controller Data Table Addresses

Because MicroLogix 1100/1400 controllers are 16-bit platforms and are used with the 32-bit 20-COMM-ER adapter, the data will be transposed from the least-significant word (LSW) to the most-significant word (MSW) in the controller.

When the I/O was configured (Chapter 4), an available data table address (N20) was used. Figure 29 shows the entire data file address structure for this example.

Figure 29 - Data File Table for Example Ladder Logic Program

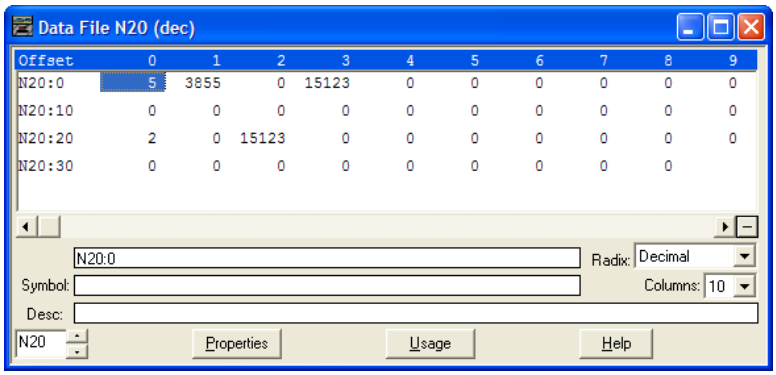

Important: The N20:0 data table address in this example is used to set a control timeout value (in seconds) which determines how long it will take the adapter to detect a communication loss. Enter a valid value (1…32767) for N20:0. A value of zero (0) is not valid, because it disables the timeout and all I/O connections (Logic Command/Status, Reference/Feedback, and Datalinks) intended for the drive will not execute. A timeout value of 5…20 seconds is recommended.

Depending on the drive you are using, Table 11, Table 12, Table 13, or Table 14 show the I/O definitions as they relate to the N20 data table (Figure 29) being used in this example.

When using PowerFlex 70 or 70 EC, PowerFlex 700, PowerFlex 700VC drives, or SMC Flex controllers—which all contain INT (16-bit format) data types, you will read from and write to the MSW data table address in the controller.

When using PowerFlex 700 VC drives or SMC-50 controllers, which contain DINT (32-bit format) data types, you will read from and write to the LSW data table address in the controller.

When using PowerFlex 700S drives, which contain both DINT (32-bit format) and REAL (floating point format) data types, you will always read from and write to the LSW data table address in the controller first. Then if the data value exceeds 16 bits, the remaining value will be in the MSW data table address.

Table 11 - Controller Data Table Addresses for PowerFlex 70/70 EC, PowerFlex 700 Drives, and SMC Flex Controllers

Data Table Address	Description
N20:1	Logic Status (see Appendix D)
N20:2	Reserved
N20:3	Speed Feedback
N20:4	Value of parameter assigned to Parameter 310 [Data Out A1] LSW
N20:5	Value of parameter assigned to Parameter 310 [Data Out A1] MSW
N20:6	Value of parameter assigned to Parameter 311 [Data Out A2] LSW
N20:7	Value of parameter assigned to Parameter 311 [Data Out A2] MSW
N20:8	Value of parameter assigned to Parameter 312 [Data Out B1] LSW
N20:9	Value of parameter assigned to Parameter 312 [Data Out B1] MSW
N20:10	Value of parameter assigned to Parameter 313 [Data Out B2] LSW
N20:11	Value of parameter assigned to Parameter 313 [Data Out B2] MSW
N20:12	Value of parameter assigned to Parameter 314 [Data Out C1] LSW
N20:13	Value of parameter assigned to Parameter 314 [Data Out C1] MSW
N20:14	Value of parameter assigned to Parameter 315 [Data Out C2] LSW
N20:15	Value of parameter assigned to Parameter 315 [Data Out C2] MSW
N20:16	Value of parameter assigned to Parameter 316 [Data Out D1] LSW
N20:17	Value of parameter assigned to Parameter 316 [Data Out D1] MSW
N20:18	Value of parameter assigned to Parameter 317 [Data Out D2] LSW
N20:19	Value of parameter assigned to Parameter 317 [Data Out D2] MSW
N20:20	Logic Command (see Appendix D)
N20:21	Reserved
N20:22	Speed Reference
N20:23	Value of parameter assigned to Parameter 300 [Data In A1] LSW
N20:24	Value of parameter assigned to Parameter 300 [Data In A1] MSW
N20:25	Value of parameter assigned to Parameter 301 [Data In A2] LSW
N20:26	Value of parameter assigned to Parameter 301 [Data In A2] MSW
N20:27	Value of parameter assigned to Parameter 302 [Data In B1] LSW
N20:28	Value of parameter assigned to Parameter 302 [Data In B1] MSW
N20:29	Value of parameter assigned to Parameter 303 [Data In B2] LSW
N20:30	Value of parameter assigned to Parameter 303 [Data In B2] MSW
N20:31	Value of parameter assigned to Parameter 304 [Data In C1] LSW
N20:32	Value of parameter assigned to Parameter 304 [Data In C1] MSW
N20:33	Value of parameter assigned to Parameter 305 [Data In C2] LSW
N20:34	Value of parameter assigned to Parameter 305 [Data In C2] MSW
N20:35	Value of parameter assigned to Parameter 306 [Data In D1] LSW
N20:36	Value of parameter assigned to Parameter 306 [Data In D1] MSW
N20:37	Value of parameter assigned to Parameter 307 [Data In D2] LSW
N20:38	Value of parameter assigned to Parameter 307 [Data In D2] MSW

Table 12 - Controller Data Table Addresses for PowerFlex 700 VC Drives and SMC-50 Controllers

Data Table Address	Description
N20:1	Logic Status (see Appendix D)
N20:2	Reserved
N20:3	Speed Feedback
N20:4	Value of parameter assigned to Parameter 310 [Data Out A1] LSW
N20:5	Value of parameter assigned to Parameter 310 [Data Out A1] MSW
N20:6	Value of parameter assigned to Parameter 311 [Data Out A2] LSW
N20:7	Value of parameter assigned to Parameter 311 [Data Out A2] MSW
N20:8	Value of parameter assigned to Parameter 312 [Data Out B1] LSW
N20:9	Value of parameter assigned to Parameter 312 [Data Out B1] MSW
N20:10	Value of parameter assigned to Parameter 313 [Data Out B2] LSW
N20:11	Value of parameter assigned to Parameter 313 [Data Out B2] MSW
N20:12	Value of parameter assigned to Parameter 314 [Data Out C1] LSW
N20:13	Value of parameter assigned to Parameter 314 [Data Out C1] MSW
N20:14	Value of parameter assigned to Parameter 315 [Data Out C2] LSW
N20:15	Value of parameter assigned to Parameter 315 [Data Out C2] MSW
N20:16	Value of parameter assigned to Parameter 316 [Data Out D1] LSW
N20:17	Value of parameter assigned to Parameter 316 [Data Out D1] MSW
N20:18	Value of parameter assigned to Parameter 317 [Data Out D2] LSW
N20:19	Value of parameter assigned to Parameter 317 [Data Out D2] MSW
N20:20	Logic Command (see Appendix D)
N20:21	Reserved
N20:22	Speed Reference
N20:23	Value of parameter assigned to Parameter 300 [Data In A1] LSW
N20:24	Value of parameter assigned to Parameter 300 [Data In A1] MSW
N20:25	Value of parameter assigned to Parameter 301 [Data In A2] LSW
N20:26	Value of parameter assigned to Parameter 301 [Data In A2] MSW
N20:27	Value of parameter assigned to Parameter 302 [Data In B1] LSW
N20:28	Value of parameter assigned to Parameter 302 [Data In B1] MSW
N20:29	Value of parameter assigned to Parameter 303 [Data In B2] LSW
N20:30	Value of parameter assigned to Parameter 303 [Data In B2] MSW
N20:31	Value of parameter assigned to Parameter 304 [Data In C1] LSW
N20:32	Value of parameter assigned to Parameter 304 [Data In C1] MSW
N20:33	Value of parameter assigned to Parameter 305 [Data In C2] LSW
N20:34	Value of parameter assigned to Parameter 305 [Data In C2] MSW
N20:35	Value of parameter assigned to Parameter 306 [Data In D1] LSW
N20:36	Value of parameter assigned to Parameter 306 [Data In D1] MSW
N20:37	Value of parameter assigned to Parameter 307 [Data In D2] LSW
N20:38	Value of parameter assigned to Parameter 307 [Data In D2] MSW

Table 13 - Controller Data Table Addresses for PowerFlex 700S Drives with Phase I Control

Data Table Address	Description
N20:1	Logic Status (see Appendix D)
N20:2	Speed Feedback LSW
N20:3	Speed Feedback MSW
N20:4	Value of parameter assigned to Parameter 724/725 [Data Out A1] LSW
N20:5	Value of parameter assigned to Parameter 724/725 [Data Out A1] MSW
N20:6	Value of parameter assigned to Parameter 726/727 [Data Out A2] LSW
N20:7	Value of parameter assigned to Parameter 726/727 [Data Out A2] MSW
N20:8	Value of parameter assigned to Parameter 728/729 [Data Out B1] LSW
N20:9	Value of parameter assigned to Parameter 728/729 [Data Out B1] MSW
N20:10	Value of parameter assigned to Parameter 730/731 [Data Out B2] LSW
N20:11	Value of parameter assigned to Parameter 730/731 [Data Out B2] MSW
N20:12	Value of parameter assigned to Parameter 732/733 [Data Out C1] LSW
N20:13	Value of parameter assigned to Parameter 732/733 [Data Out C1] MSW
N20:14	Value of parameter assigned to Parameter 734/735 [Data Out C2] LSW
N20:15	Value of parameter assigned to Parameter 734/735 [Data Out C2] MSW
N20:16	Value of parameter assigned to Parameter 736/737 [Data Out D1] LSW
N20:17	Value of parameter assigned to Parameter 736/737 [Data Out D1] MSW
N20:18	Value of parameter assigned to Parameter 738/739 [Data Out D2] LSW
N20:19	Value of parameter assigned to Parameter 738/739 [Data Out D2] MSW
N20:20	Logic Command (see Appendix D)
N20:21	Speed Reference LSW
N20:22	Speed Reference MSW
N20:23	Value of parameter assigned to Parameter 707/708 [Data In A1] LSW
N20:24	Value of parameter assigned to Parameter 707/708 [Data In A1] MSW
N20:25	Value of parameter assigned to Parameter 709/710 [Data In A2] LSW
N20:26	Value of parameter assigned to Parameter 709/710 [Data In A2] MSW
N20:27	Value of parameter assigned to Parameter 711/712 [Data In B1] LSW
N20:28	Value of parameter assigned to Parameter 711/712 [Data In B1] MSW
N20:29	Value of parameter assigned to Parameter 713/714 [Data In B2] LSW
N20:30	Value of parameter assigned to Parameter 713/714 [Data In B2] MSW
N20:31	Value of parameter assigned to Parameter 715/716 [Data In C1] LSW
N20:32	Value of parameter assigned to Parameter 715/716 [Data In C1] MSW
N20:33	Value of parameter assigned to Parameter 717/718 [Data In C2] LSW
N20:34	Value of parameter assigned to Parameter 717/718 [Data In C2] MSW
N20:35	Value of parameter assigned to Parameter 719/720 [Data In D1] LSW
N20:36	Value of parameter assigned to Parameter 719/720 [Data In D1] MSW
N20:37	Value of parameter assigned to Parameter 721/722 [Data In D2] LSW
N20:38	Value of parameter assigned to Parameter 721/722 [Data In D2] MSW

Table 14 - Controller Data Table Addresses for PowerFlex 700S Drives with Phase II Control

Data Table Address	Description
N20:1	Logic Status (see Appendix D)
N20:2	Speed Feedback LSW
N20:3	Speed Feedback MSW
N20:4	Value of parameter assigned to Parameter 660 [DPI Data Out A1] LSW
N20:5	Value of parameter assigned to Parameter 660 [DPI Data Out A1] MSW
N20:6	Value of parameter assigned to Parameter 661 [DPI Data Out A2] LSW
N20:7	Value of parameter assigned to Parameter 661 [DPI Data Out A2] MSW
N20:8	Value of parameter assigned to Parameter 662 [DPI Data Out B1] LSW
N20:9	Value of parameter assigned to Parameter 662 [DPI Data Out B1] MSW
N20:10	Value of parameter assigned to Parameter 663 [DPI Data Out B2] LSW
N20:11	Value of parameter assigned to Parameter 663 [DPI Data Out B2] MSW
N20:12	Value of parameter assigned to Parameter 664 [DPI Data Out C1] LSW
N20:13	Value of parameter assigned to Parameter 664 [DPI Data Out C1] MSW
N20:14	Value of parameter assigned to Parameter 665 [DPI Data Out C2] LSW
N20:15	Value of parameter assigned to Parameter 665 [DPI Data Out C2] MSW
N20:16	Value of parameter assigned to Parameter 666 [DPI Data Out D1] LSW
N20:17	Value of parameter assigned to Parameter 666 [DPI Data Out D1] MSW
N20:18	Value of parameter assigned to Parameter 667 [DPI Data Out D2] LSW
N20:19	Value of parameter assigned to Parameter 667 [DPI Data Out D2] MSW
N20:20	Logic Command (see Appendix D)
N20:21	Speed Reference LSW
N20:22	Speed Reference MSW
N20:23	Value of parameter assigned to Parameter 651 [DPI Data In A1] LSW
N20:24	Value of parameter assigned to Parameter 651 [DPI Data In A1] MSW
N20:25	Value of parameter assigned to Parameter 652 [DPI Data In A2] LSW
N20:26	Value of parameter assigned to Parameter 652 [DPI Data In A2] MSW
N20:27	Value of parameter assigned to Parameter 653 [DPI Data In B1] LSW
N20:28	Value of parameter assigned to Parameter 653 [DPI Data In B1] MSW
N20:29	Value of parameter assigned to Parameter 654 [DPI Data In B2] LSW
N20:30	Value of parameter assigned to Parameter 654 [DPI Data In B2] MSW
N20:31	Value of parameter assigned to Parameter 655 [DPI Data In C1] LSW
N20:32	Value of parameter assigned to Parameter 655 [DPI Data In C1] MSW
N20:33	Value of parameter assigned to Parameter 656 [DPI Data In C2] LSW
N20:34	Value of parameter assigned to Parameter 656 [DPI Data In C2] MSW
N20:35	Value of parameter assigned to Parameter 657 [DPI Data In D1] LSW
N20:36	Value of parameter assigned to Parameter 657 [DPI Data In D1] MSW
N20:37	Value of parameter assigned to Parameter 658 [DPI Data In D2] LSW
N20:38	Value of parameter assigned to Parameter 658 [DPI Data In D2] MSW

You can use the controller data table addresses to directly control and monitor the drive without creating any ladder logic program. However, if you intend to use Human Machine Interface devices (PanelView, and so forth) to operate the drive and view its status, you will need to create descriptive controller data table addresses (Table 15 and Table 16) and a ladder logic program that will pass that data to the data table addresses used for messaging.

Table 15 - Controller and Program Data Table Address Descriptions for Example Logic Status/Feedback Ladder Logic Program

Description	Controller Data Table Address
Drive Ready	N20:1/0
Drive Active	N20:1/1
Actual Direction (XIO)	N20:1/3
Actual Direction (XIC)	N20:1/3
Drive Faulted	N20:1/7
Drive At Speed	N20:1/8
Speed Feedback	N20:3

Description	Program Data Table Address
Status Ready	B3:1/0
Status Active	B3:1/1
Status Forward	B3:1/3
Status Reverse	B3:1/4
Status Faulted	B3:1/7
Status At Speed	B3:1/8
Speed Feedback	B30:3

Table 16 - Program and Controller Data Table Address Descriptions for Example Logic Command/Reference Ladder Logic Program

Description	Program Data Table Address
Command Stop	B3:20/0
Command Start	B3:20/1
Command Jog	B3:20/2
Command Clear Faults	B3:20/3
Command Forward Reverse (XIO)	B3:20/4
Command Forward Reverse (XIC)	B3:20/4
Speed Reference	N30:22

Description	Controller Data Table Address
Drive Stop	N20:20/0
Drive Start	N20:20/1
Drive Jog	N20:20/2
Drive Clear Faults	N20:20/3
Drive Forward	N20:20/4
Drive Reverse	N20:20/5
Speed Reference	N20:22

An example ladder logic program that uses these descriptive controller data table addresses and passes their data to the descriptive program data table addresses is shown in Figure 30, Figure 31, Figure 32, and Figure 33.

Figure 30 - MicroLogix 1100/1400 Example Ladder Logic Program for Logic Status

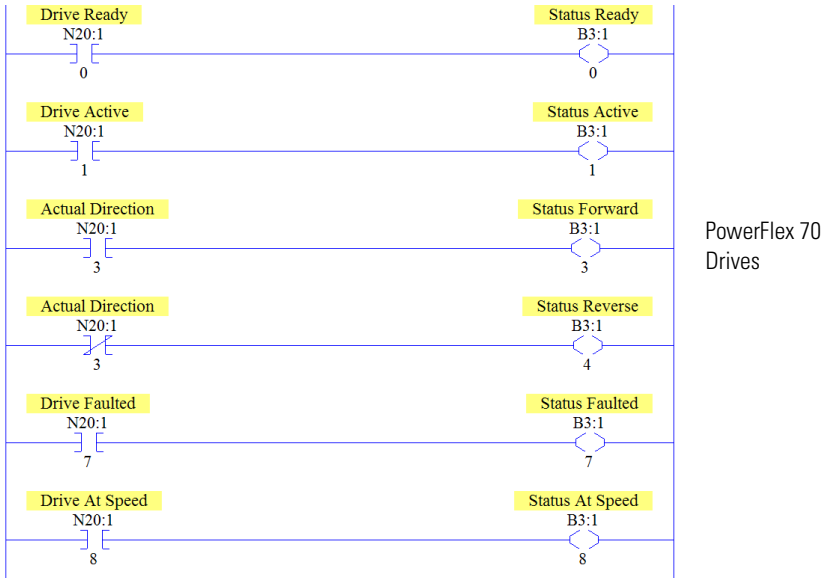

Figure 31 - MicroLogix 1100/1400 Example Ladder Logic Program for Speed Feedback

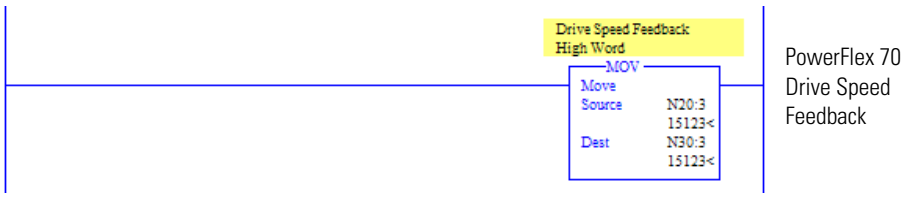

Figure 32 - MicroLogix 1100/1400 Example Ladder Logic Program for Logic Command

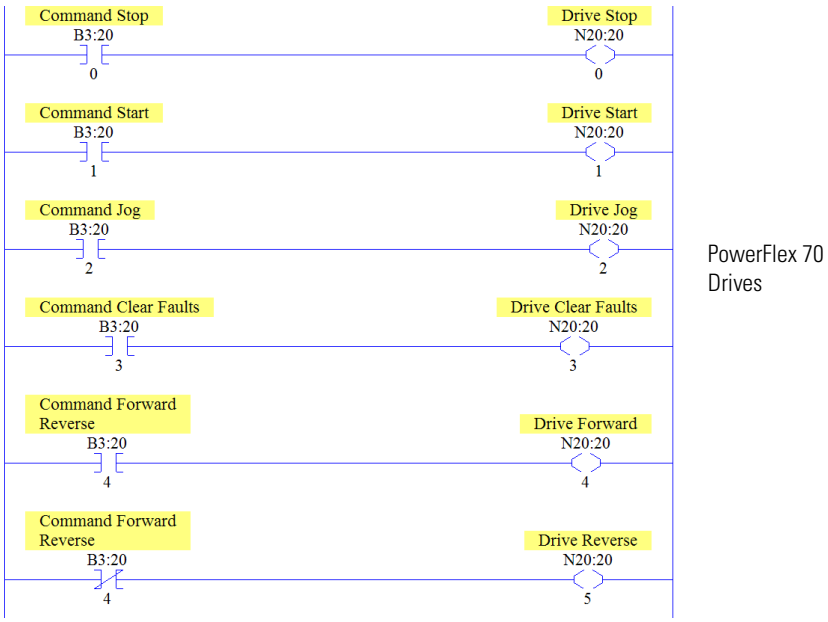

Figure 33 - MicroLogix 1100/1400 Example Ladder Logic Program for Speed Reference

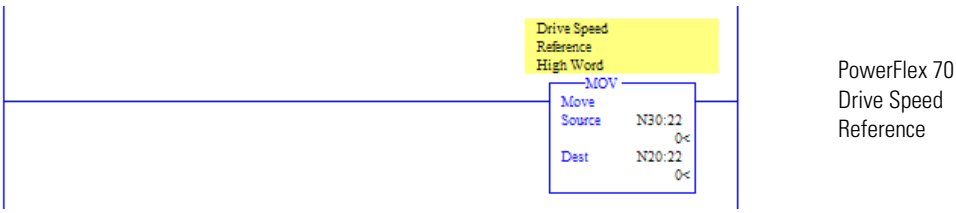

Using Explicit Messaging

This chapter provides information and examples that explain how to use Explicit Messaging to configure and monitor the adapter and connected PowerFlex 7-Class drive or SMC.

Topic	Page
About Explicit Messaging	106
Performing Explicit Messages	106
ControlLogix Controller Examples	108
MicroLogix 1100/1400 Controller Examples	124

ATTENTION: Risk of injury or equipment damage exists. The examples in this publication are intended solely for purposes of example. There are many variables and requirements with any application. Rockwell Automation, Inc. does not assume responsibility or liability (to include intellectual property liability) for actual use of the examples shown in this publication.

ATTENTION: Risk of equipment damage exists. If Explicit Messages are programmed to write parameter data to Nonvolatile Storage (NVS) frequently, the NVS will quickly exceed its life cycle and cause the drive to malfunction. Do not create a program that frequently uses Explicit Messages to write parameter data to NVS. Datalinks do not write to NVS and should be used for frequently changed parameters.

See Chapter 5 for information about the I/O Image, using Logic Command/Status, Reference/Feedback, and Datalinks.

About Explicit Messaging

Explicit Messaging is used to transfer data that does not require continuous updates. With Explicit Messaging, you can configure and monitor a slave device's parameters on the network.

Important: When an explicit message is performed, by default no connection is made since it is an 'unconnected' message. When timing of the message transaction is important, you can create a dedicated message connection between the controller and drive by checking the 'Connected' box on the Communications tab message configuration screen during message setup. These message connections are in addition to the I/O connection. However, the trade off for more message connections is decreased network performance. If your application cannot tolerate this, do not check the 'Connected' box, which is recommended.

Important: PowerFlex 7-Class drives have explicit messaging limitations. Table 17 shows the EtherNet/IP Object Class code compatibilities for these drives.

Table 17 - Explicit Messaging Class Code Compatibility with Drives

EtherNet/IP Object Class Code	PowerFlex 7-Class Drives	Explicit Messaging Function
Parameter Object 0x0F	Yes	Single parameter reads/writes
DPI Parameter Object 0x93	Yes	Single and scattered parameter reads/writes

Performing Explicit Messages

There are five basic events in the Explicit Messaging process. The details of each step will vary depending on the type of controller being used. See the documentation for your controller.

Important: There must be a request message and a response message for all Explicit Messages, whether you are reading or writing data.

Figure 34 - Explicit Message Process

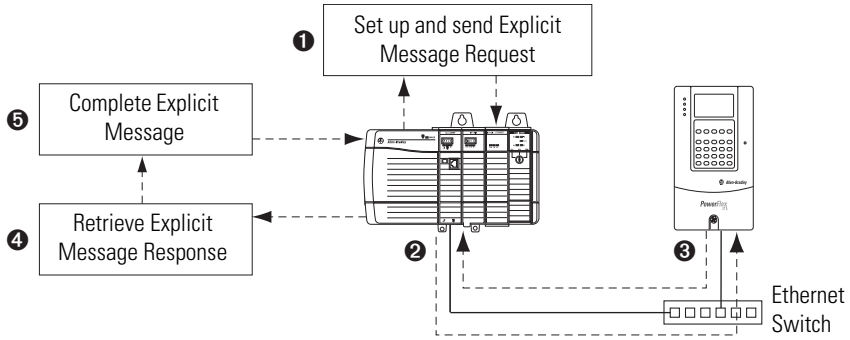

Event	Description
❶	You format the required data and set up the ladder logic program to send an Explicit Message request to the scanner or bridge module (download).
❷	The scanner or bridge module transmits the Explicit Message Request to the slave device over the network.
❸	The slave device transmits the Explicit Message Response back to the scanner. The data is stored in the scanner buffer.
❹	The controller retrieves the Explicit Message Response from the scanner's buffer (upload).
❺	The Explicit Message is complete.

For information on the maximum number of Explicit Messages that can be executed at a time, see the documentation for the scanner or bridge and/or controller that is being used.

ControlLogix Controller Examples

TIP To display the Message Configuration screen in RSLogix 5000 software, add a message instruction (MSG), create a new tag for the message (Properties: Base tag type, MESSAGE data type, controller scope), and click the ... button in the message instruction.

For supported classes, instances, and attributes, see Appendix C, EtherNet/IP Objects.

Explicit Messaging Using RSLogix 5000 Software, Version 15.00 or Later

ControlLogix Controller Example Ladder Logic Program to Read a Single Parameter

A Parameter Read message is used to read a single parameter. This read message example reads the value of parameter 003 - [Output Current] in a PowerFlex 7-Class drive.

Table 18 - Example Controller Tags to Read a Single Parameter

Operand	Controller Tags for Single Read Message	Data Type
XIC	Execute_Single_Read_Message	BOOL
MSG	Single_Read_Message	MESSAGE

Figure 35 - Example Ladder Logic to Read a Single Parameter

ControlLogix Controller – Formatting a Message to Read a Single Parameter, RSLogix 5000 Software, Version 15.00 or Later

Figure 36 - Parameter Read Single Message Configuration Screens

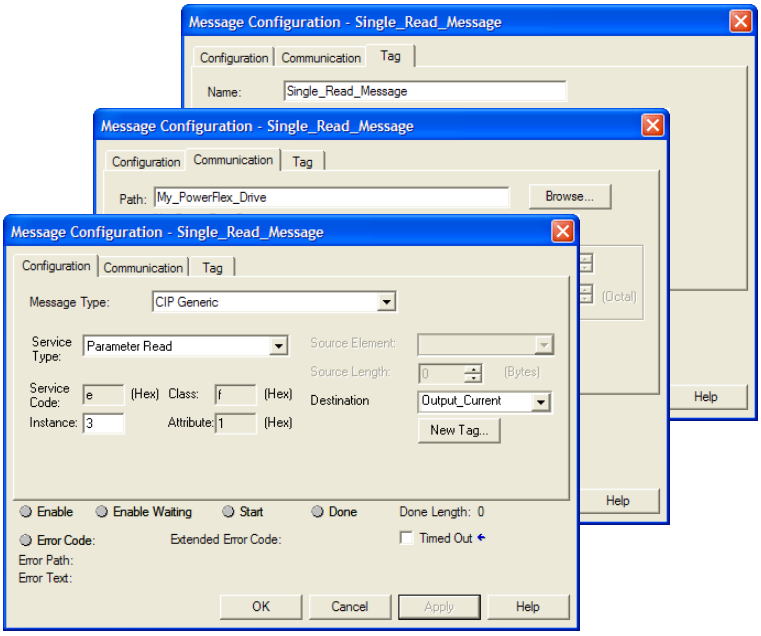

The following table identifies the data that is required in each box to configure a message to read a single parameter.

Configuration Tab	Example Value	Description
Message Type	CIP Generic	Used to access the Parameter Object in the adapter.
Service Type (1)	Parameter Read	This service is used to read a parameter value.
Service Code (1)	e (Hex.)	Code for the requested service.
Class	f (Hex.)	Class ID for the DPI Parameter Object.
Instance (2)	3 (Dec.)	Instance number is the same as parameter number.
Attribute	1 (Hex.)	Attribute number for the Parameter Value attribute.
Destination	Output_Current (4)	The tag where the data that is read is stored.
Communication Tab	**Example Value**	**Description**
Path (3)	My_PowerFlex_Drive	The path is the route that the message will follow.
Tag Tab	**Example Value**	**Description**
Name	Single_Read_Message	The name for the message.

(1) The default setting for Service Type is 'Custom', enabling entry of a Service Code not available from the Service Type pull-down menu. When choosing a Service Type other than 'Custom' from the pull-down menu, an appropriate Hex. value is automatically assigned to the Service Code box which is dimmed (unavailable).

(2) Only drive parameters (Port 0) can be read using Parameter Object Class code 0x0F. To read a parameter of a peripheral in another port, use DPI Parameter Object Class code 0x93 (see page 121).

(3) Click **Browse** to find the path, or type in the name of the device listed in the I/O Configuration folder.

(4) In this example, Output Current is a 32-bit parameter requiring the Data Type field to be set to 'DINT' when creating the controller tag. If the parameter being read is a 16-bit parameter, the tag Data Type field must be set to 'INT'. When using a PowerFlex 700S drive, Output Current is a floating point parameter requiring the Data Type field to be set to 'REAL' when creating the controller tag. See the drive documentation to determine the size of the parameter and its data type (16-bit or 32-bit integer or REAL).

ControlLogix Controller Example Ladder Logic Program to Write a Single Parameter, RSLogix 5000 Software, Version 15.00 or Later

A Parameter Write message is used to write to a single parameter. This write message example writes a value to parameter 140 - [Accel Time 1] in a PowerFlex 7-Class drive.

Table 19 - Example Controller Tags to Write a Single Parameter

Operand	Controller Tags for Single Write Message	Data Type
XIC	Execute_Single_Write_Message	BOOL
MSG	Single_Write_Message	MESSAGE

Figure 37 - Example Ladder Logic to Write a Single Parameter

Important: If the explicit message single write must be written continuously, use DPI Parameter Object Class code 0x93. This writes to RAM—not NVS (EEPROM) memory. This example single write message using Class code F writes to NVS. Over time, continuous writes will exceed the EEPROM life cycle and cause the drive to malfunction.

ControlLogix Controller – Formatting a Message to Write a Single Parameter, RSLogix 5000 Software, Version 15.00 or Later

Figure 38 - Parameter Write Single Message Configuration Screens

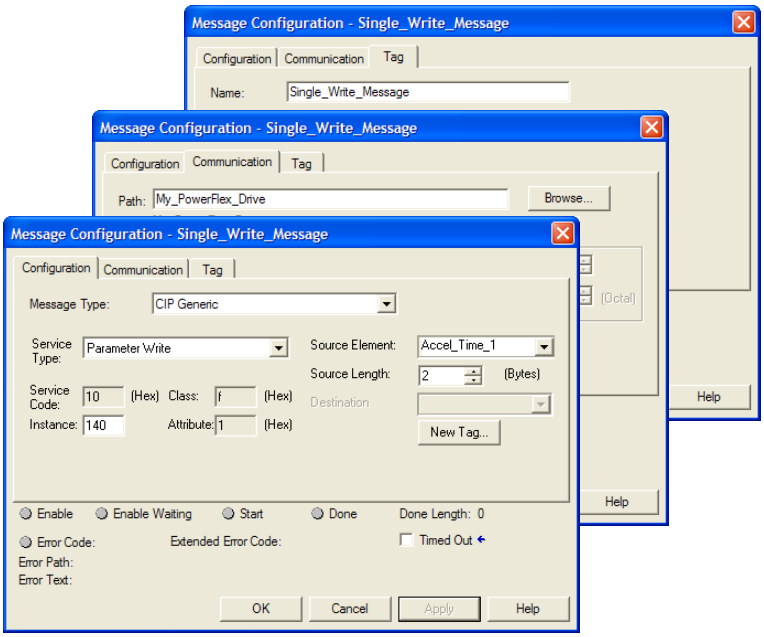

The following table identifies the data that is required in each box to configure a message to write a single parameter.

Configuration Tab	Example Value	Description
Message Type	CIP Generic	Used to access the Parameter Object in the adapter.
Service Type (1)	Parameter Write	This service is used to write a parameter value.
Service Code (1)	10 (Hex.)	Code for the requested service.
Class	f (Hex.)	Class ID for the DPI Parameter Object.
Instance (2)	140 (Dec.)	Instance number is the same as parameter number.
Attribute	1 (Hex.)	Attribute number for the Parameter Value attribute.
Source Element	Accel_Time_1 (4)	Name of the tag for any service data to be sent from the scanner or bridge to the adapter/drive.
Source Length	2 (4)	Number of bytes of service data to be sent in the message.
Communication Tab	**Example Value**	**Description**
Path (3)	My_PowerFlex_Drive	The path is the route that the message will follow.
Tag Tab	**Example Value**	**Description**
Name	Single_Write_Message	The name for the message.

(1) The default setting for Service Type is 'Custom', enabling entry of a Service Code not available from the Service Type pull-down menu. When choosing a Service Type other than 'Custom' from the pull-down menu, an appropriate Hex. value is automatically assigned to the Service Code box which is dimmed (unavailable).

(2) Only drive parameters (Port 0) can be written to using Parameter Object Class code 0x0F. To write to a parameter of a peripheral in another port, use DPI Parameter Object Class code 0x93 (see page 123).

(3) Click **Browse** to find the path, or type in the name of the device listed in the I/O Configuration folder.

(4) In this example, Accel Time 1 is a 16-bit parameter requiring the tag Data Type field to be set to 'INT' when creating the controller tag. If the parameter being written to is a 32-bit parameter, the tag Data Type field must be set to 'DINT'. Also, the Source Length field on the Message Configuration screen must correspond to the selected Data Type in bytes (for example, 4 bytes for a DINT or a REAL). When using a PowerFlex 700S drive, Accel Time 1 is a floating point number requiring the Data Type field to be set to 'REAL' when creating the controller tag. See the drive documentation to determine the size of the parameter and its data type (16-bit or 32-bit integer or REAL).

ControlLogix Controller Example Ladder Logic Program to Read Multiple Parameters, RSLogix 5000 Software, All Versions

A Scattered Read message is used to read the values of multiple parameters. Up to 22 parameters can be read. This read message example reads the values of these five parameters.

PowerFlex 7-Class Drive
• Parameter 001 - [Output Freq] • Parameter 003 - [Output Current] • Parameter 006 - [Output Voltage] • Parameter 012 - [DC Bus Voltage] • Parameter 017 - [Analog In1 Value]

See DPI Parameter Object on page 198 (Class code 0x93) for parameter numbering.

Important: See Table 17 on page 106 for limitations of PowerFlex 7-Class drives when using Class code 0x93.

Table 20 - Example Controller Tags to Read Multiple Parameters

Operand	Controller Tags for Read Multiple Message	Data Type
XIC	Execute_Scattered_Read_Message	BOOL
MSG	Scattered_Read_Message	MESSAGE

Figure 39 - Example Ladder Logic to Read Multiple Parameters

ControlLogix Controller – Formatting a Message to Read Multiple Parameters, RSLogix 5000 Software, All Versions

Figure 40 - Scattered Read Message Configuration Screens

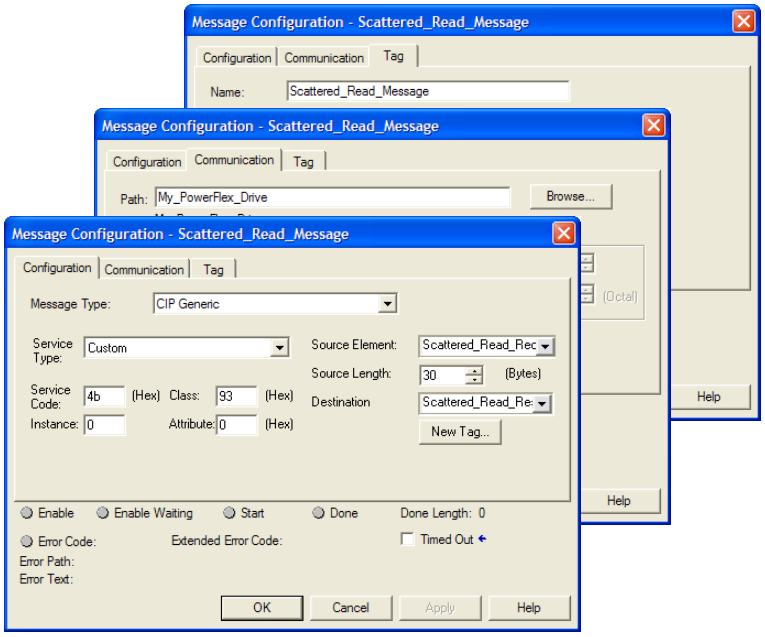

The following table identifies the data that is required in each box to configure a message to read multiple parameters.

Configuration Tab	Example Value	Description
Message Type	CIP Generic	Used to access Parameter Object in the adapter.
Service Type (1)	Custom	Required for scattered messages.
Service Code (1)	4b (Hex.)	Code for the requested service.
Class	93 or 9F (Hex.) (3)	Class ID for the DPI Parameter Object.
Instance	0 (Dec.)	Required for scattered messages.
Attribute	0 (Hex.)	Required for scattered messages.
Source Element	Scattered_Read_Request (4)	Name of the tag for any service data to be sent from scanner or bridge to the adapter/drive.
Source Length	30 (4)	Number of bytes of service data to be sent in the message.
Destination	Scattered_Read_Response	The tag where the data that is read is stored.
Communication Tab	**Example Value**	**Description**
Path (2)	My_PowerFlex_Drive	The path is the route that the message will follow.
Tag Tab	**Example Value**	**Description**
Name	Scattered_Read_Message	The name for the message.

(1) The default setting for Service Type is 'Custom', enabling entry of a Service Code not available from the Service Type pull-down menu. When choosing a Service Type other than 'Custom' from the pull-down menu, an appropriate Hex. value is automatically assigned to the Service Code box which is dimmed (unavailable).

(2) Click **Browse** to find the path, or type in the name of the device listed in the I/O Configuration folder.

(3) See Table 17 on page 106 for limitations of PowerFlex 7-Class drives when using DPI Parameter Object Class code 0x93 for explicit messaging.

(4) In this example, we are reading five parameters. Each parameter being read requires an array of three INT registers. Therefore, a controller tag was created with its Data Type field set to 'INT[15]'. Also, the Source Length field on the Message Configuration screen must correspond to the selected Data Type in bytes (for this example, 30 bytes for an INT[15] array). Scattered read messages always assume that every parameter being read is a 32-bit parameter, regardless of its actual size. Maximum length is 132 bytes or 66 words which equates to 22 parameters. For parameter numbering, see DPI Parameter Object on page 198 (Class code 0x93).

ControlLogix Controller Example Scattered Read Request Data

In this message example, we use the data structure in Figure 41 or Figure in the source tag named Scattered_Read_Request to read these five parameters.

PowerFlex 7-Class Drive
• Parameter 001 - [Output Freq] • Parameter 003 - [Output Current] • Parameter 006 - [Output Voltage] • Parameter 012 - [DC Bus Voltage] • Parameter 017 - [Analog In1 Value]

See DPI Parameter Object on page 198 (Class code 0x93) for parameter numbering.

Figure 41 - Example Scattered Read Request Data for PowerFlex 7-Class Drive

Name	Value	Data Type	Description
− Scattered_Read_Request	{...}	INT[15]	
+ Scattered_Read_Request[0]	1	INT	Parameter Number (decimal)
+ Scattered_Read_Request[1]	0	INT	Pad Word
+ Scattered_Read_Request[2]	0	INT	Pad Word
+ Scattered_Read_Request[3]	3	INT	Parameter Number (decimal)
+ Scattered_Read_Request[4]	0	INT	Pad Word
+ Scattered_Read_Request[5]	0	INT	Pad Word
+ Scattered_Read_Request[6]	6	INT	Parameter Number (decimal)
+ Scattered_Read_Request[7]	0	INT	Pad Word
+ Scattered_Read_Request[8]	0	INT	Pad Word
+ Scattered_Read_Request[9]	12	INT	Parameter Number (decimal)
+ Scattered_Read_Request[10]	0	INT	Pad Word
+ Scattered_Read_Request[11]	0	INT	Pad Word
+ Scattered_Read_Request[12]	17	INT	Parameter Number (decimal)
+ Scattered_Read_Request[13]	0	INT	Pad Word
+ Scattered_Read_Request[14]	0	INT	Pad Word

ControlLogix Controller Example Scattered Read Response Data

The Scattered Read Request message reads the multiple parameters and returns their values to the destination tag (Scattered_Read_Response). Figure 42 or Figure shows the parameter values.

Figure 42 - Example Scattered Read Response Data for PowerFlex 7-Class Drive

Name	Value	Data Type	Description
Scattered_Read_Response	{...}	INT[15]	
Scattered_Read_Response[0]	1	INT	Parameter Number (decimal)
Scattered_Read_Response[1]	325	INT	Parameter Value LSW
Scattered_Read_Response[2]	0	INT	Parameter Value MSW
Scattered_Read_Response[3]	3	INT	Parameter Number (decimal)
Scattered_Read_Response[4]	1	INT	Parameter Value LSW
Scattered_Read_Response[5]	0	INT	Parameter Value MSW
Scattered_Read_Response[6]	6	INT	Parameter Number (decimal)
Scattered_Read_Response[7]	1187	INT	Parameter Value LSW
Scattered_Read_Response[8]	0	INT	Parameter Value MSW
Scattered_Read_Response[9]	12	INT	Parameter Number (decimal)
Scattered_Read_Response[10]	3292	INT	Parameter Value LSW
Scattered_Read_Response[11]	0	INT	Parameter Value MSW
Scattered_Read_Response[12]	17	INT	Parameter Number (decimal)
Scattered_Read_Response[13]	8318	INT	Parameter Value LSW
Scattered_Read_Response[14]	0	INT	Parameter Value MSW

In this message example, the parameters have the following values.

PowerFlex 7-Class Drive Parameter	Read Value
1 - [Output Freq]	32.5 Hz
3 - [Output Current]	0.01 Amp
6 - [Output Voltage]	118.7 VAC
12 - [DC Bus Voltage]	329.2 VDC
17 - [Analog In2 Value]	8.318 mA

ControlLogix Controller Example Ladder Logic Program to Write Multiple Parameters, RSLogix 5000 Software, All Versions

A Scattered Write message is used to write to multiple parameters. This write message example writes the following values to these five parameters.

PowerFlex 7-Class Drive Parameter	Write Value
141 - [Accel Time 2]	11.1 Sec.
143 - [Decel Time 2]	22.2 Sec.
105 - [Preset Speed 5]	33.3 Hz.
106 - [Preset Speed 6]	44.4 Hz.
107 - [Preset Speed 7]	55.5 Hz.

See DPI Parameter Object on page 198 (Class code 0x93) for parameter numbering.

Important: See Table 17 on page 106 for limitations of PowerFlex 7-Class drives when using Class code 0x93 for explicit messaging.

Table 21 - Example Controller Tags to Write Multiple Parameters

Operand	Controller Tags for Write Multiple Message	Data Type
XIC	Execute_Scattered_Write_Message	BOOL
MSG	Scattered_Write_Message	MESSAGE

Figure 43 - Example Ladder Logic to Write Multiple Parameters

Important: If the explicit message scattered write must be written continuously, then use a separate explicit message single write for each parameter using DPI Parameter Object Class code 0x93 and attribute A (10 decimal; see page 123). Attribute A writes to RAM—not NVS (EEPROM) memory. This example scattered write message using attribute 0 writes to NVS. Over time, continuous writes will exceed the EEPROM life cycle and cause the drive to malfunction.

ControlLogix Controller – Formatting a Message to Write Multiple Parameters, RSLogix 5000 Software, All Versions

Figure 44 - Scattered Write Multiple Message Configuration Screens

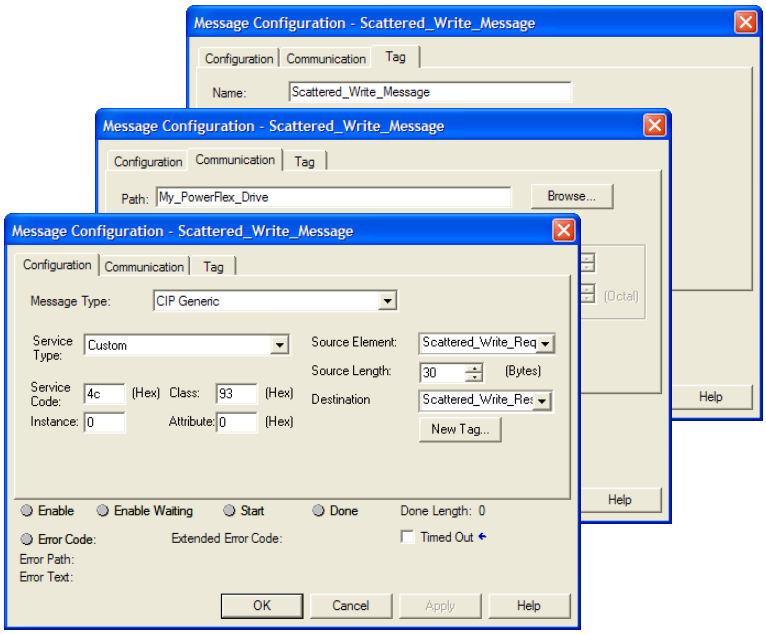

The following table identifies the data that is required in each box to configure a message to write multiple parameters.

Configuration Tab	Example Value	Description
Message Type	CIP Generic	Used to access Parameter Object in the adapter.
Service Type (1)	Custom	Required for scattered messages.
Service Code (1)	4c (Hex.)	Code for the requested service.
Class	93 or 9F (Hex.) (3)	Class ID for the DPI Parameter Object.
Instance	0 (Dec.)	Required for scattered messages.
Attribute	0 (Hex.)	Required for scattered messages.
Source Element	Scattered_Write_Request (4)	Name of the tag for any service data to be sent from scanner or bridge to the adapter/drive.
Source Length	30 (4)	Number of bytes of service data to be sent in the message.
Destination	Scattered_Write_Response	The tag where the data that is read is stored.
Communication Tab	**Example Value**	**Description**
Path (2)	My_PowerFlex_Drive	The path is the route that the message will follow.
Tag Tab	**Example Value**	**Description**
Name	Scattered_Write_Message	The name for the message.

(1) The default setting for Service Type is 'Custom', enabling entry of a Service Code not available from the Service Type pull-down menu. When choosing a Service Type other than 'Custom' from the pull-down menu, an appropriate Hex. value is automatically assigned to the Service Code box which is dimmed (unavailable).

(2) Click **Browse** to find the path, or type in the name of the device listed in the I/O Configuration folder.

(3) See Table 17 on page 106 for limitations of PowerFlex 7-Class drives when using DPI Parameter Object Class code 0x93 for explicit messaging.

(4) In this example, we are writing to five parameters. Each parameter being written to requires an array of three INT registers. Therefore, a controller tag was created with its Data Type field set to 'INT[15]'. Also, the Source Length field on the Message Configuration screen must correspond to the selected Data Type in bytes (for this example, 30 bytes for an INT[15] array). Scattered write messages always assume that every parameter being written to is a 32-bit parameter, regardless of its actual size. Maximum length is 132 bytes or 66 words which equates to 22 parameters. For parameter numbering, see DPI Parameter Object on page 198 (Class code 0x93).

ControlLogix Controller Example Scattered Write Request Data

In this message example, we use the data structure in Figure 45 or Figure in the source tag (Scattered_Write_Request) to write new values to these parameters.

PowerFlex 7-Class Drive Parameter	Write Value
141 - [Accel Time 2]	11.1 Sec.
143 - [Decel Time 2]	22.2 Sec.
105 - [Preset Speed 5]	33.3 Hz.
106 - [Preset Speed 6]	44.4 Hz.
107 - [Preset Speed 7]	55.5 Hz.

See DPI Parameter Object on page 198 (Class code 0x93) for parameter numbering.

Figure 45 shows the parameter values.

Figure 45 - Example Scattered Write Request Data for PowerFlex 7-Class Drive

Name	Value	Data Type	Description
Scattered_Write_Request	{...}	INT[15]	
Scattered_Write_Request[0]	141	INT	Parameter Number (decimal)
Scattered_Write_Request[1]	111	INT	Parameter Value LSW
Scattered_Write_Request[2]	0	INT	Parameter Value MSW
Scattered_Write_Request[3]	143	INT	Parameter Number (decimal)
Scattered_Write_Request[4]	222	INT	Parameter Value LSW
Scattered_Write_Request[5]	0	INT	Parameter Value MSW
Scattered_Write_Request[6]	105	INT	Parameter Number (decimal)
Scattered_Write_Request[7]	333	INT	Parameter Value LSW
Scattered_Write_Request[8]	0	INT	Parameter Value MSW
Scattered_Write_Request[9]	106	INT	Parameter Number (decimal)
Scattered_Write_Request[10]	444	INT	Parameter Value LSW
Scattered_Write_Request[11]	0	INT	Parameter Value MSW
Scattered_Write_Request[12]	107	INT	Parameter Number (decimal)
Scattered_Write_Request[13]	555	INT	Parameter Value LSW
Scattered_Write_Request[14]	0	INT	Parameter Value MSW

ControlLogix Controller Example Scattered Write Response Data

The results of the message appear in the destination tag named Scattered_Write_Response (Figure 46). Values of '0' indicate no errors occurred.

Figure 46 - Example Scattered Write Response Data for PowerFlex 7-Class Drive

Name	Value	Data Type	Description
Scattered_Write_Response	{...}	INT[15]	
Scattered_Write_Response[0]	141	INT	Parameter Number (decimal)
Scattered_Write_Response[1]	0	INT	Pad Word or Error Code
Scattered_Write_Response[2]	0	INT	Pad Word
Scattered_Write_Response[3]	143	INT	Parameter Number (decimal)
Scattered_Write_Response[4]	0	INT	Pad Word or Error Code
Scattered_Write_Response[5]	0	INT	Pad Word
Scattered_Write_Response[6]	105	INT	Parameter Number (decimal)
Scattered_Write_Response[7]	0	INT	Pad Word or Error Code
Scattered_Write_Response[8]	0	INT	Pad Word
Scattered_Write_Response[9]	106	INT	Parameter Number (decimal)
Scattered_Write_Response[10]	0	INT	Pad Word or Error Code
Scattered_Write_Response[11]	0	INT	Pad Word
Scattered_Write_Response[12]	107	INT	Parameter Number (decimal)
Scattered_Write_Response[13]	0	INT	Pad Word or Error Code
Scattered_Write_Response[14]	0	INT	Pad Word

ControlLogix Controller – Explanation of Request and Response Data for Read/Write Multiple Messaging, RSLogix 5000 Software, All Versions

The data structures in Figure 47 and Figure 48 use 16-bit words and can accommodate up to 22 parameters in a single message. In the Response Message, a parameter number with the high bit set indicates that the associated parameter value field contains an error code (parameter number in response data will be negative).

Important: See Table 17 on page 106 for limitations of PowerFlex 7-Class drives when using Class code 0x93 for explicit messaging.

Figure 47 - Data Structures for Scattered Read Messages

	Request (Source Data)		Response (Destination Data)
Word 0	Parameter Number	Word 0	Parameter Number
1	Pad Word	1	Parameter Value LSW
2	Pad Word	2	Parameter Value MSW
3	Parameter Number	3	Parameter Number
4	Pad Word	4	Parameter Value LSW
5	Pad Word	5	Parameter Value MSW
6	Parameter Number	6	Parameter Number
7	Pad Word	7	Parameter Value LSW
8	Pad Word	8	Parameter Value MSW
9	Parameter Number	9	Parameter Number
10	Pad Word	10	Parameter Value LSW
11	Pad Word	11	Parameter Value MSW
12	Parameter Number	12	Parameter Number
13	Pad Word	13	Parameter Value LSW
14	Pad Word	14	Parameter Value MSW
⋮		⋮	
63	Parameter Number	63	Parameter Number
64	Pad Word	64	Parameter Value LSW
65	Pad Word	65	Parameter Value MSW

Figure 48 - Data Structures for Scattered Write Messages

	Request (Source Data)		Response (Destination Data)
Word 0	Parameter Number	Word 0	Parameter Number
1	Parameter Value LSW	1	Pad Word
2	Parameter Value MSW	2	Pad Word
3	Parameter Number	3	Parameter Number
4	Parameter Value LSW	4	Pad Word
5	Parameter Value MSW	5	Pad Word
6	Parameter Number	6	Parameter Number
7	Parameter Value LSW	7	Pad Word
8	Parameter Value MSW	8	Pad Word
9	Parameter Number	9	Parameter Number
10	Parameter Value LSW	10	Pad Word
11	Parameter Value MSW	11	Pad Word
12	Parameter Number	12	Parameter Number
13	Parameter Value LSW	13	Pad Word
14	Parameter Value MSW	14	Pad Word
⋮		⋮	
63	Parameter Number	63	Parameter Number
64	Parameter Value LSW	64	Pad Word
65	Parameter Value MSW	65	Pad Word

Explicit Messaging Using RSLogix 5000 Software, All Versions

ControlLogix Controller Example Ladder Logic Program to Read a Single Parameter

A Get Attribute Single message is used to read a single parameter. This read message example reads the value of parameter 003 - [Output Current] in a PowerFlex 7-Class drive.

Important: See Table 17 on page 106 for limitations of PowerFlex 7-Class drives when using DPI Parameter Object Class code 0x93 for explicit messaging.

Table 22 - Example Controller Tags to Read a Single Parameter

Operand	Controller Tags for Single Read Message	Data Type
XIC	Execute_Single_Read_Message	BOOL
MSG	Single_Read_Message	MESSAGE

Figure 49 - Example Ladder Logic to Read a Single Parameter

ControlLogix Controller – Formatting a Message to Read a Single Parameter, RSLogix 5000 Software, All Versions

Figure 50 - Get Attribute Single Message Configuration Screens

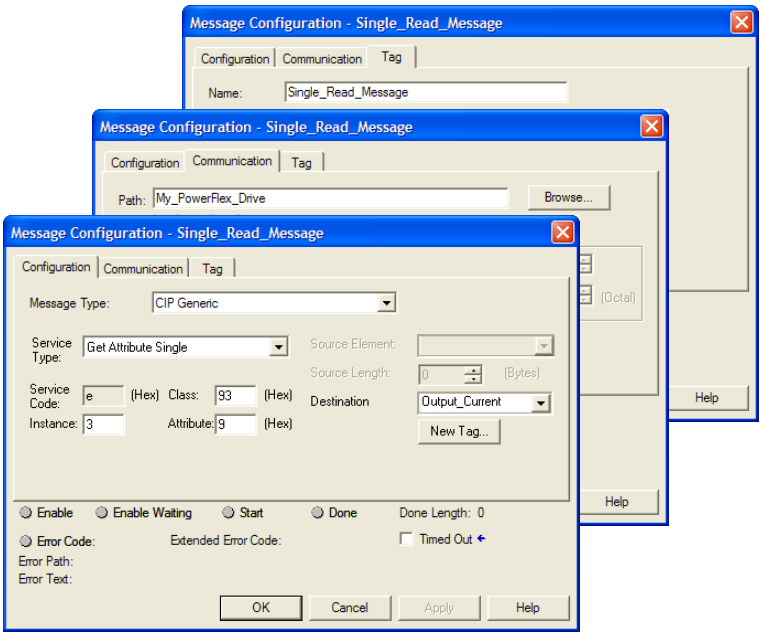

The following table identifies the data that is required in each box to configure a message to read a single parameter.

Configuration Tab	Example Value	Description
Message Type	CIP Generic	Used to access the Parameter Object in the adapter.
Service Type (1)	Get Attribute Single	This service is used to read a parameter value.
Service Code (1)	e (Hex.)	Code for the requested service.
Class	93 or 9F (Hex.) (4)	Class ID for the DPI Parameter Object.
Instance (2)	3 (Dec.)	Instance number is the same as parameter number.
Attribute	9 (Hex.)	Attribute number for the Parameter Value attribute.
Destination	Output_Current (5)	The tag where the data that is read is stored.
Communication Tab	**Example Value**	**Description**
Path (3)	My_PowerFlex_Drive	The path is the route that the message will follow.
Tag Tab	**Example Value**	**Description**
Name	Single_Read_Message	The name for the message.

(1) The default setting for Service Type is 'Custom', enabling entry of a Service Code not available from the Service Type pull-down menu. When choosing a Service Type other than 'Custom' from the pull-down menu, an appropriate Hex. value is automatically assigned to the Service Code box which is dimmed (unavailable).

(2) The instance is the parameter number in the drive (Port 0). For example, to read parameter 4 of a peripheral in Port 5 of an SMC-50 controller, the instance would be 21504 + 4 = 21508. See DPI Parameter Object on page 198 (Class code 0x93) to determine the instance number.

(3) Click **Browse** to find the path, or type in the name of the device listed in the I/O Configuration folder.

(4) See Table 17 on page 106 for limitations of PowerFlex 7-Class drives when using DPI Parameter Object Class code 0x93 for explicit messaging.

(5) In this example, Output Current is a 32-bit parameter requiring the Data Type field to be set to 'DINT' when creating the controller tag. If the parameter being read is a 16-bit parameter, the tag Data Type field must be set to 'INT'. When using a PowerFlex 700S drive, Output Current is a floating point number requiring the Data Type field to be set to 'REAL' when the creating controller tag. See the drive documentation to determine the size of the parameter and its data type (16-bit or 32-bit integer or REAL).

ControlLogix Controller Example Ladder Logic Program to Write a Single Parameter, RSLogix 5000 Software, All Versions

A Set Attribute Single message is used to write to a single parameter. This write message example writes a value to parameter 140 - [Accel Time 1] in a PowerFlex 7-Class drive.

Table 23 - Example Controller Tags to Write a Single Parameter

Operand	Controller Tags for Single Write Message	Data Type
XIC	Execute_Single_Write_Message	BOOL
MSG	Single_Write_Message	MESSAGE

Figure 51 - Example Ladder Logic to Write a Single Parameter

ControlLogix Controller – Formatting a Message to Write a Single Parameter, RSLogix 5000 Software, All Versions

Figure 52 - Set Attribute Single Message Configuration Screens

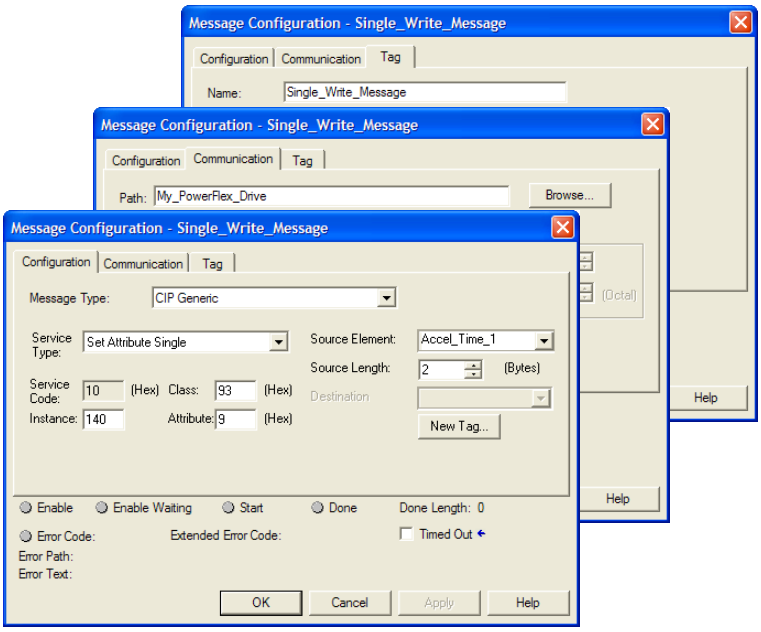

The following table identifies the data that is required in each box to configure a message to write a single parameter.

Configuration Tab	Example Value	Description
Message Type	CIP Generic	Used to access the Parameter Object in the adapter.
Service Type (1)	Set Attribute Single	This service is used to write a parameter value.
Service Code (1)	10 (Hex.)	Code for the requested service.
Class	93 or 9F (Hex.) (5)	Class ID for the DPI Parameter Object.
Instance (2)	140 (Dec.)	Instance number is the same as parameter number.
Attribute (3)	9 or A (Hex.)	Attribute number for the Parameter Value attribute.
Source Element	Accel_Time_1 (6)	Name of the tag for any service data to be sent from the scanner or bridge to the adapter/drive.
Source Length	2 (6)	Number of bytes of service data to be sent in the message.
Communication Tab	**Example Value**	**Description**
Path (4)	My_PowerFlex_Drive	The path is the route that the message will follow.
Tag Tab	**Example Value**	**Description**
Name	Single_Write_Message	The name for the message.

(1) The default setting for Service Type is 'Custom', enabling entry of a Service Code not available from the Service Type pull-down menu. When choosing a Service Type other than 'Custom' from the pull-down menu, an appropriate Hex. value is automatically assigned to the Service Code box which is dimmed (unavailable).

(2) The instance is the parameter number in the drive (Port 0). For example, to write to parameter 4 of a peripheral in Port 7 of an SMC-50 controller, the instance would be 21504 + 4 = 21508. See DPI Parameter Object on page 198 (Class code 0x93) to determine the instance number.

(3) Setting the Attribute value to '9' will write the parameter value to the drive's Nonvolatile Storage (EEPROM) memory, which retains the parameter value even after the drive is power cycled. **Important:** When set to '9', the EEPROM may quickly exceed its life cycle and cause the drive to malfunction. Setting the Attribute value to 'A' (10 decimal) will write the parameter value to temporary memory, which deletes the parameter value after the drive is power cycled. When frequent write messages are required, we recommend using the 'A' (10 decimal) setting.

(4) Click **Browse** to find the path, or type in the name of the device listed in the I/O Configuration folder.

(5) See Table 17 on page 106 for limitations of PowerFlex 7-Class drives when using DPI Parameter Object Class code 0x93 for explicit messaging.

(6) In this example, Accel Time 1 is a 16-bit parameter requiring the tag Data Type field to be set to 'INT' when creating the controller tag. If the parameter being written to is a 32-bit parameter, the tag Data Type field must be set to 'DINT'. Also, the Source Length field on the Message Configuration screen must correspond to the selected Data Type in bytes (for example, 4 bytes for a DINT or a REAL). When using a PowerFlex 700S drive, Accel Time 1 is a floating point number requiring the Data Type field to be set to 'REAL' when creating the controller tag. See the drive documentation to determine the size of the parameter and its data type (16-bit or 32-bit integer or REAL).

ControlLogix Controller Example Ladder Logic Program to Read or Write Multiple Parameters, RSLogix 5000 Software, All Versions

Because the example ladder logic rungs, configuration screens, and request/response data to read or write multiple parameters using RSLogix 5000 software, all versions, are identical to those for RSLogix 5000 software, version 15.00 or later, see the information contained on page 112 through page 119 for complete details.

MicroLogix 1100/1400 Controller Examples

When using RSLogix 500 software, version 7.10 and earlier, explicit messaging must be performed using the PCCC N-File method. For RSLogix 500 software, version 7.20 and later, the CIP messaging method has been added along with the PCCC N-File method. However, it is recommended to use the CIP method because it is easier to use and understand. For this reason, only instructions for the CIP method are provided.

The CIP messaging method provides two ways to perform explicit messaging:

- Read/Write Parameter Service simplifies setup by requiring less data to be entered in message configuration screens. However, the Read/Write Parameter Service can only be used to perform single parameter read or single parameter write explicit messages. (Multiple parameter reads or writes must be performed using the Generic Get/Set Attribute Service described below.)

Important: When performing a Write Parameter message, the data will always be written to the drive's Nonvolatile Storage (NVS). Continuous NVS writes may damage the drive's EEPROM. If continuous writes are necessary, use the Generic Set Attribute Single Service and attribute A (10 decimal; see page 133).

- Generic Get/Set Attribute Service requires more setup data to be entered in message configuration screens, but can be used to perform single parameter read or write and multiple parameter read or write explicit messages. Also, the Generic Set Attribute Service offers the choice of writing the data to the drive's Nonvolatile Storage (NVS) or the drive's Random Access Memory (RAM; for Generic Set Attribute Single service only, see page 133). Note that when selecting the data to be written to RAM, the data will be lost if the drive loses power.

For supported classes, instances, and attributes, see Appendix C, EtherNet/IP Objects.

MicroLogix 1100/1400 Controller Explicit Messaging Using the Read/Write Parameter Service

MicroLogix 1100/1400 Controller Example Ladder Logic Program to Read a Single Parameter

A Read Parameter message is used to read a single parameter. This read message example reads the value of parameter 003 - [Output Current] in a PowerFlex 7-Class drive.

Figure 53 - Example Ladder Logic to Read a Single Parameter

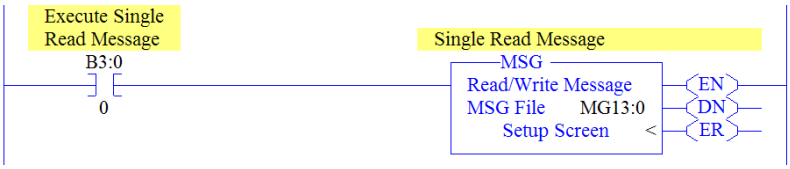

MicroLogix 1100/1400 Controller – Formatting a Message to Read a Single Parameter Using Read/Write Parameter Service

Figure 54 - Read Parameter Message Configuration Screens

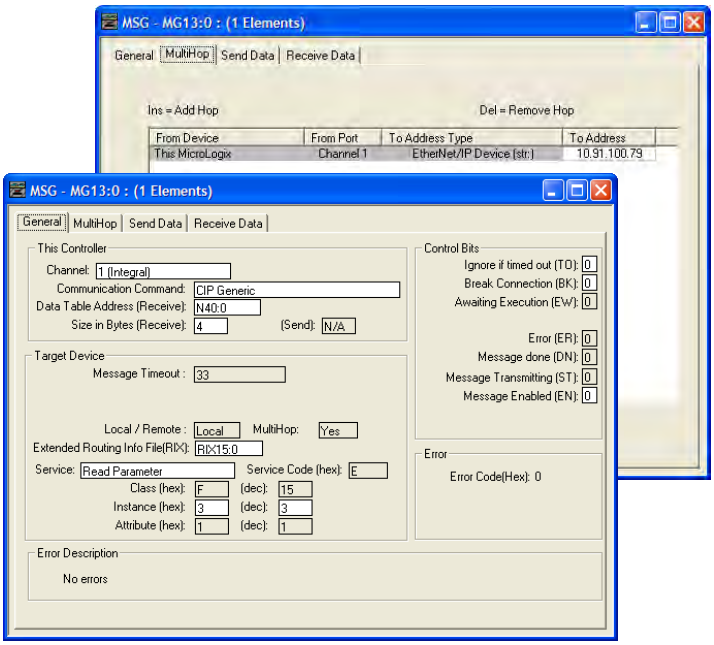

The following table identifies the data that is required in each box to configure a message to read a single parameter.

General Tab	Example Value	Description
Channel	1	Controller port to which the network is connected.
Comm… Command	CIP Generic	Used to access the Parameter Object in the adapter.
Data Table Address	N40:0	An unused controller data table address containing the message instruction. This address is the starting word of the destination file.
Size in Bytes	4 (3)	Number of bytes to be transferred. Each byte size is an 8-bit integer.
Extended Routing…	RIX15:0	An unused routing information file for the controller.
Service (1)	Read Parameter	Code for the requested service.
Instance (2)	3 (Dec.)	Instance number is the same as the parameter number.
MultiHop Tab	**Example Value**	**Description**
To Address	10.91.100.79	IP address of the adapter connected to the drive.

(1) The default setting for Service is 'Custom', enabling entry of a Service Code not available from the Service pull-down menu. When choosing a Service other than 'Custom' from the pull-down menu, an appropriate Hex. value is automatically assigned to the Service Code box which is dimmed (unavailable).

(2) Only drive parameters (Port 0) can be read using Parameter Object Class code 0x0F. To read a parameter of a peripheral in another port, use DPI Parameter Object Class code 0x93 (see page 130).

(3) In this example, Output Current is a 32-bit parameter. If the parameter being read is a 16-bit parameter, the Size in Bytes would be set to 2. When the parameter being read is a 32-bit REAL (floating point) data type, the size in bytes would be set to 4. See the drive documentation to determine the size of the parameter and its data type (16-bit or 32-bit integer or REAL).

MicroLogix 1100/1400 Controller Example Read Single Response Data

In this message example, we use the data table address in Figure 55 to store the response value (0.13 amps) that was read from drive parameter 003 - [Output Current]. To determine the data type for the parameter and its required scaling, see the specific drive documentation.

Figure 55 - Example Read Single Response Data File

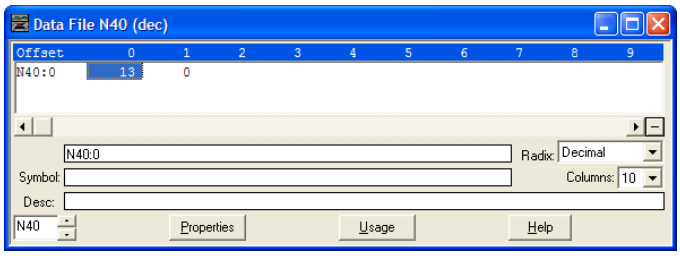

Figure 56 shows example ladder logic to correctly format the three possible data types for read messages in the MicroLogix 1100/1400 controller.

Figure 56 - Example Ladder Logic to Format Parameter Data Types for Reads

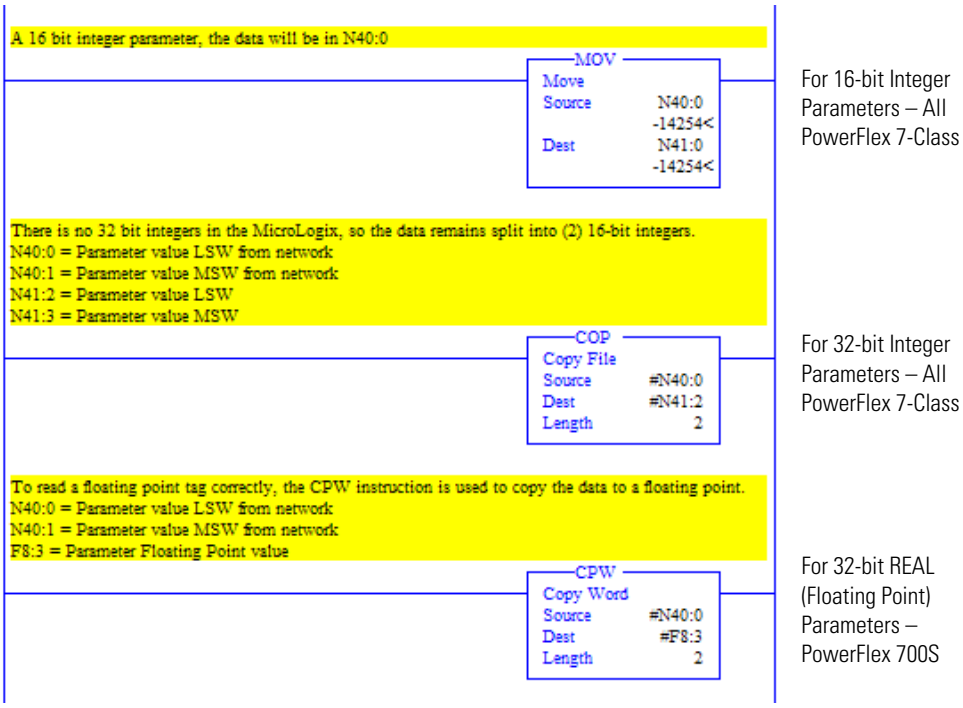

MicroLogix 1100/1400 Controller Example Ladder Logic Program to Write a Single Parameter Using Read/Write Parameter Service

A Write Parameter message is used to write to a single parameter. This write message example writes a value to parameter 140 - [Accel Time 1] in a PowerFlex 7-Class drive.

Figure 57 - Example Ladder Logic to Write a Single Parameter

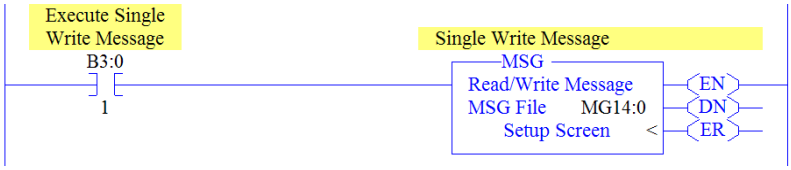

Important: If the explicit message single write must be written continuously, use DPI Parameter Object Class code 0x93 and attribute A (10 decimal; see page 133). This writes to RAM—not NVS (EEPROM) memory. This example single write message using Class code F writes to NVS. Over time, continuous writes will exceed the EEPROM life cycle and cause the drive to malfunction.

MicroLogix 1100/1400 Controller – Formatting a Message to Write a Single Parameter Using Read/Write Parameter Service

Figure 58 - Write Parameter Message Configuration Screens

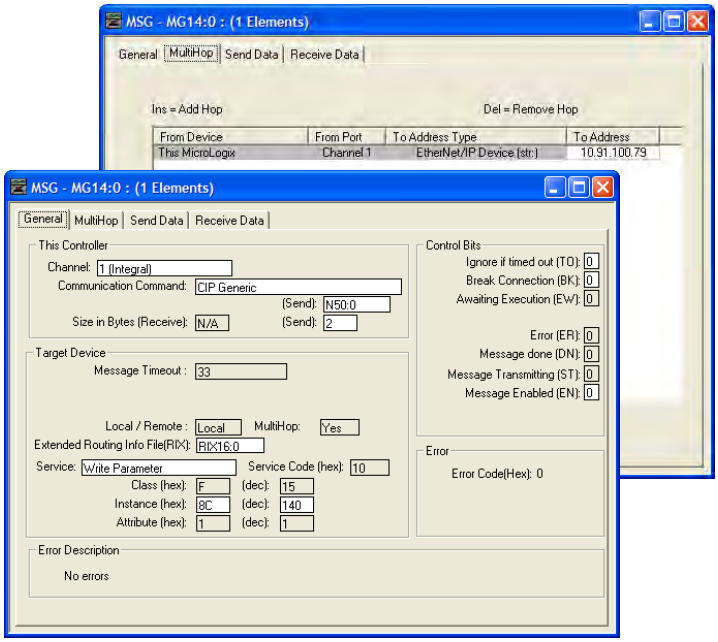

The following table identifies the data that is required in each box to configure a message to write a single parameter.

General Tab	Example Value	Description
Channel	1	Controller port to which the network is connected.
Comm… Command	CIP Generic	Used to access the Parameter Object in the adapter.
Data Table Address	N50:0	An unused controller data table address containing the message instruction. This address is the starting word of the destination file.
Size in Bytes	2 (3)	Number of bytes to be transferred. Each byte size is an 8-bit integer.
Extended Routing…	RIX16:0	An unused routing information file for the controller.
Service (1)	Write Parameter	Code for the requested service.
Instance (2)	140 (Dec.)	Instance number is the same as the parameter number.
MultiHop Tab	**Example Value**	**Description**
To Address	10.91.100.79	IP address of the adapter connected to the drive.

(1) The default setting for Service is 'Custom', enabling entry of a Service Code not available from the Service pull-down menu. When choosing a Service other than 'Custom' from the pull-down menu, an appropriate Hex. value is automatically assigned to the Service Code box which is dimmed (unavailable).

(2) Only drive parameters (Port 0) can be written to using Parameter Object Class code 0x0F. To write to a parameter of a peripheral in another port, use DPI Parameter Object Class code 0x93 (see page 133).

(3) In this example, Accel Time 1 is a 16-bit parameter. If the parameter being written to is a 32-bit parameter, the Size in Bytes would be set to 4. When the parameter being written to is a 32-bit REAL (floating point) data type, the size in bytes would be set to 4. See the drive documentation to determine the size of the parameter and its data type (16-bit or 32-bit integer or REAL).

MicroLogix 1100/1400 Controller Example Write Single Request Data

In this message example, we use the data table address in Figure 59 to store the request value (10.0 sec.) that was written to drive parameter 140 - [Accel Time 1]. To determine the data type for the parameter and its required scaling, see the specific drive documentation.

Figure 59 - Example Write Single Request Data File

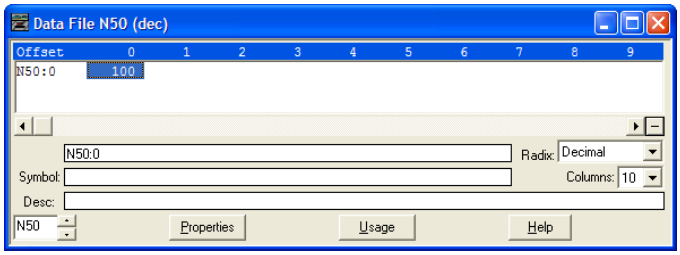

Figure 60 shows example ladder logic to correctly format the three possible data types for write messages in the MicroLogix 1100/1400 controller.

Figure 60 - Example Ladder Logic to Format Parameter Data Types for Writes

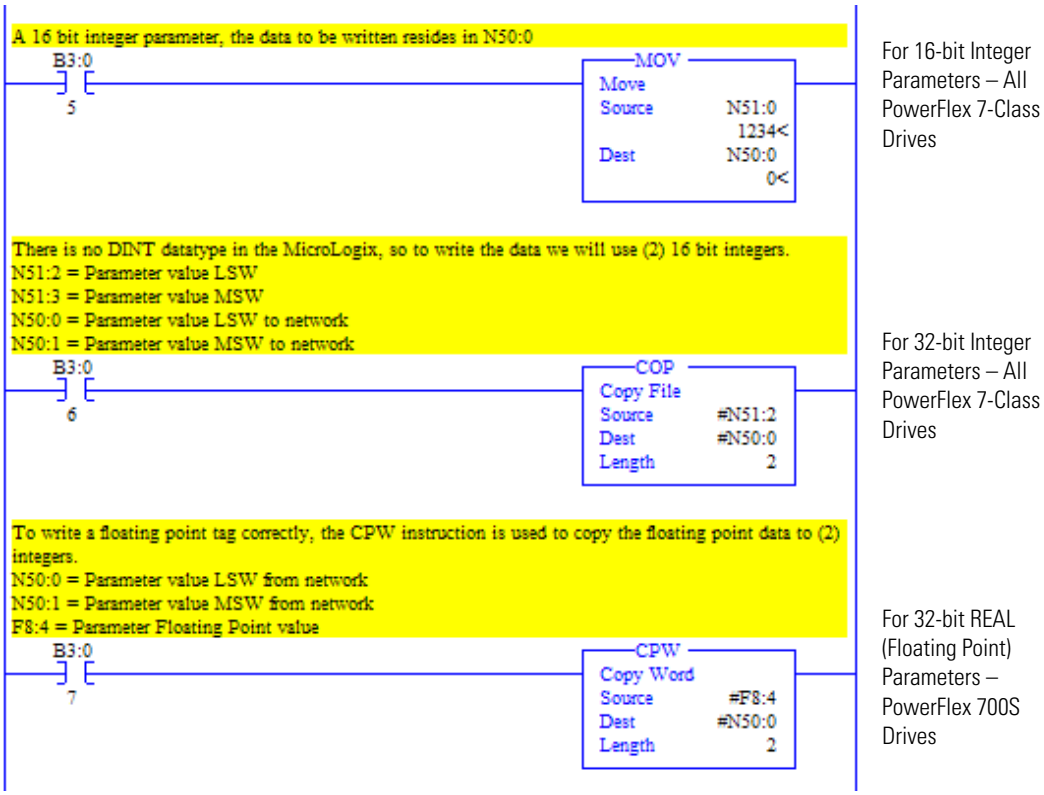

MicroLogix 1100/1400 Controller Explicit Messaging Using the Generic Get/Set Attribute Service

MicroLogix 1100/1400 Controller Example Ladder Logic Program to Read a Single Parameter

A Generic Get Attribute Single message is used to read a single parameter. This read message example reads the value of parameter 003 - [Output Current] in a PowerFlex 7-Class drive.

Important: See Table 17 on page 106 for limitations of PowerFlex 7-Class drives when using Class code 0x93 for explicit messaging.

Figure 61 - Example Ladder Logic to Read a Single Parameter

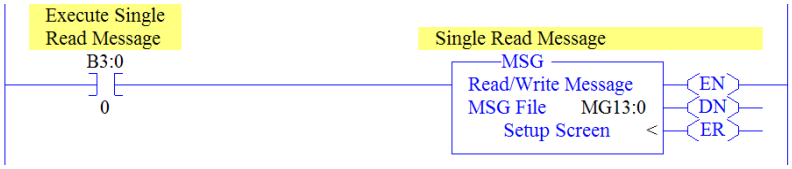

MicroLogix 1100/1400 Controller – Formatting a Message to Read a Single Parameter Using Generic Get/Set Attribute Service

Figure 62 - Generic Get Attribute Single Message Configuration Screens

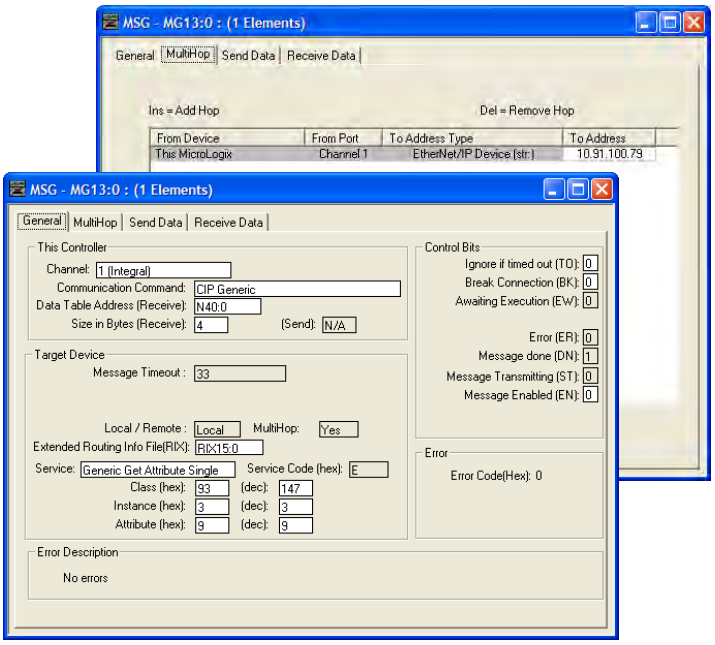

The following table identifies the data that is required in each box to configure a message to read a single parameter.

General Tab	Example Value	Description
Channel	1	Controller port to which the network is connected.
Comm… Command	CIP Generic	Used to access the Parameter Object in the adapter.
Data Table Address	N40:0	An unused controller data table address containing the message instruction. This address is the starting word of the destination file.
Size in Bytes	4 (3)	Number of bytes to be transferred. Each byte size is an 8-bit integer.
Extended Routing…	RIX15:0	An unused routing information file for the controller.
Service (1)	Generic Get Attribute Single	Code for the requested service.
Class	93 or 9F (Hex.) (4)	Class ID for the DPI Parameter Object.
Instance (2)	3 (Dec.)	Instance number is the same as the parameter number.
Attribute	9 (Dec.)	Attribute number for the Parameter Value attribute.
MultiHop Tab	**Example Value**	**Description**
To Address	10.91.100.79	IP address of the adapter connected to the drive.

(1) The default setting for Service is 'Custom', enabling entry of a Service Code not available from the Service pull-down menu. When choosing a Service other than 'Custom' from the pull-down menu, an appropriate Hex. value is automatically assigned to the Service Code box which is dimmed (unavailable).

(2) The instance is the parameter number in the drive (Port 0). For example, to read parameter 4 of a peripheral in Port 7 of an SMC-50 controller, the instance would be 21504 + 4 = 21508. See DPI Parameter Object on page 198 (Class code 0x93) to determine the instance number.

(3) In this example, Output Current is a 32-bit parameter. If the parameter being read is a 16-bit parameter, the Size in Bytes would be set to 2. When the parameter being read is a 32-bit REAL (floating point) data type, the size in bytes would be set to 4. See the drive documentation to determine the size of the parameter and its data type (16-bit or 32-bit integer or REAL).

(4) See Table 17 on page 106 for limitations of PowerFlex 7-Class drives when using DPI Parameter Object Class code 0x93 for explicit messaging.

MicroLogix 1100/1400 Controller Example Get Attribute Single Response Data

In this message example, we use the data table address in Figure 63 to store the response value (0.13 amps) that was read from drive parameter 003 - [Output Current]. To determine the data type for the parameter and its required scaling, see the specific drive documentation.

Figure 63 - Example Get Attribute Single Response Data File

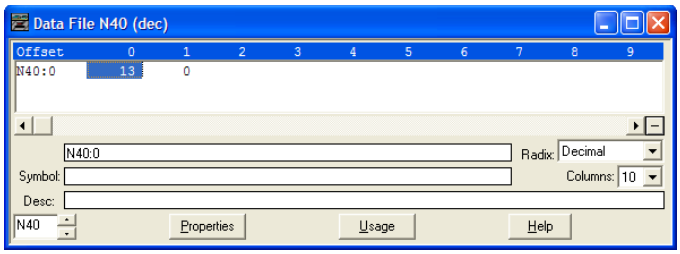

Figure 64 shows example ladder logic to correctly format the three possible data types for read messages in the MicroLogix 1100/1400 controller.

Figure 64 - Example Ladder Logic to Format Parameter Data Types for Gets

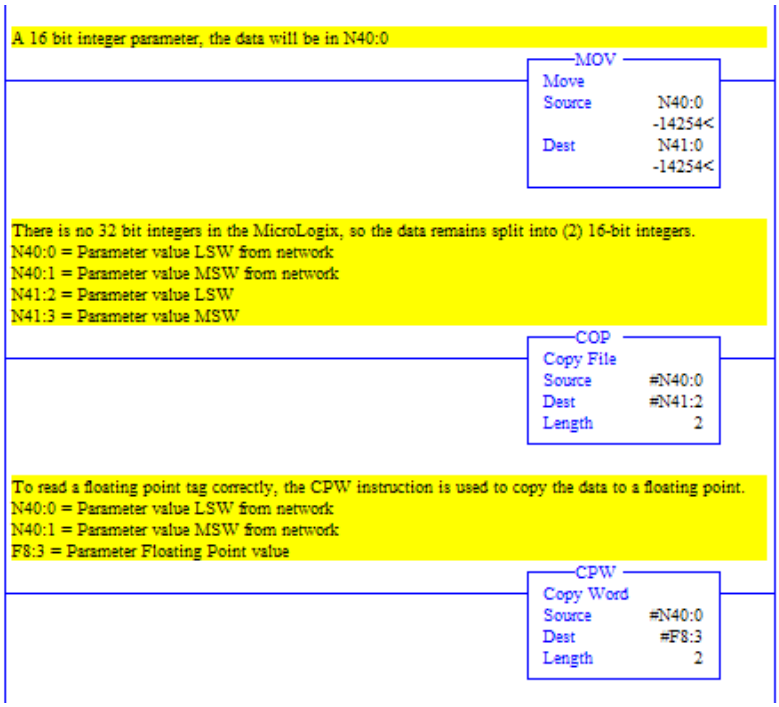

For 16-bit Integer Parameters – All PowerFlex 7-Class Drives

For 32-bit Integer Parameters – All PowerFlex 7-Class Drives

For 32-bit REAL (Floating Point) Parameters – PowerFlex 700S and PowerFlex 750-Series Drives

MicroLogix 1100/1400 Controller Example Ladder Logic Program to Write a Single Parameter Using Generic Get/Set Attribute Service

A Generic Set Attribute Single message is used to write to a single parameter. This write message example writes a value to parameter 140 - [Accel Time 1] in a PowerFlex 7-Class drive.

Important: See Table 17 on page 106 for limitations of PowerFlex 7-Class drives when using Class code 0x93 for explicit messaging.

Figure 65 - Example Ladder Logic to Write a Single Parameter

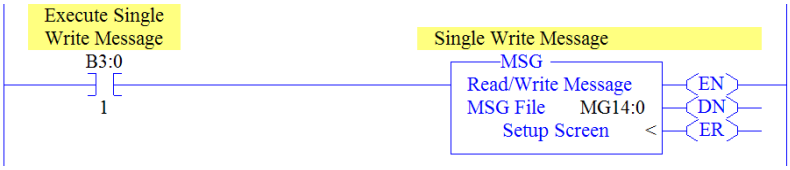

MicroLogix 1100/1400 Controller – Formatting a Message to Write a Single Parameter Using Generic Get/Set Attribute Service

Figure 66 - Generic Set Attribute Single Message Configuration Screens

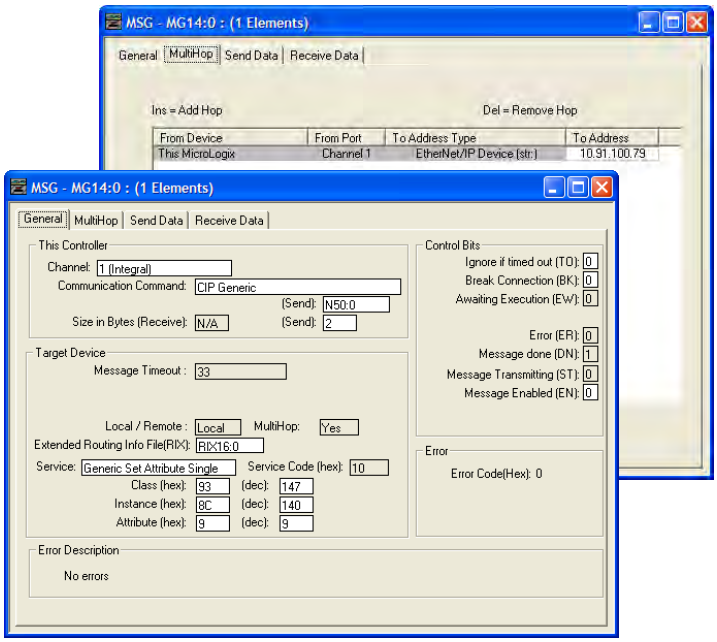

The following table identifies the data that is required in each box to configure a message to write a single parameter.

General Tab	Example Value	Description
Channel	1	Controller port to which the network is connected.
Comm… Command	CIP Generic	Used to access the Parameter Object in the adapter.
Data Table Address	N50:0	An unused controller data table address containing the message instruction. This address is the starting word of the destination file.
Size in Bytes	2 (4)	Number of bytes to be transferred. Each byte size is an 8-bit integer.
Extended Routing…	RIX16:0	An unused routing information file for the controller.
Service (1)	Generic Set Attribute Single	Code for the requested service.
Class	93 or 9F (Hex.) (5)	Class ID for the DPI Parameter Object.
Instance (2)	140 (Dec.)	Instance number is the same as the parameter number.
Attribute (3)	9 or 10 (Dec.)	Attribute number for the Parameter Value attribute.
MultiHop Tab	**Example Value**	**Description**
To Address	10.91.100.79	IP address of the adapter connected to the drive.

(1) The default setting for Service is 'Custom', enabling entry of a Service Code not available from the Service pull-down menu. When choosing a Service other than 'Custom' from the pull-down menu, an appropriate Hex. value is automatically assigned to the Service Code box which is dimmed (unavailable).

(2) The instance is the parameter number in the drive (Port 0). For example, to write to parameter 4 of a peripheral in Port 5 of an SMC-50 controller, the instance would be 21504 + 4 = 21508. See DPI Parameter Object on page 198 (Class code 0x93) to determine the instance number.

(3) Setting the Attribute value to '9' will write the parameter value to the drive's Nonvolatile Storage (EEPROM) memory, which retains the parameter value even after the drive is power cycled. **Important:** When set to '9', the EEPROM may quickly exceed its life cycle and cause the drive to malfunction. Setting the Attribute value to '10' will write the parameter value to temporary memory, which deletes the parameter value after the drive is power cycled. When frequent write messages are required, we recommend using the '10' setting.

(4) In this example, Accel Time 1 is a 16-bit parameter. If the parameter being written to is a 32-bit parameter, the Size in Bytes would be set to 4.

(5) See Table 17 on page 106 for limitations of PowerFlex 7-Class drives when using DPI Parameter Object Class code 0x93 for explicit messaging.

MicroLogix 1100/1400 Controller Example Set Attribute Single Request Data

In this message example, we use the data table address in Figure 67 to store the request value (10.0 sec.) that was written to drive parameter 140 - [Accel Time 1]. To determine the data type for the parameter and its required scaling, see the specific drive documentation.

Figure 67 - Example Set Attribute Single Request Data File

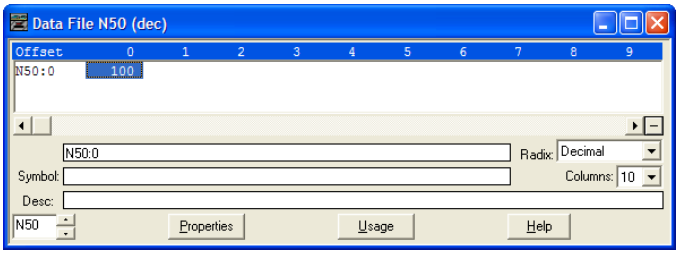

Figure 68 shows example ladder logic to correctly format the three possible data types for write messages in the MicroLogix 1100/1400 controller.

Figure 68 - Example Ladder Logic to Format Parameter Data Types for Sets

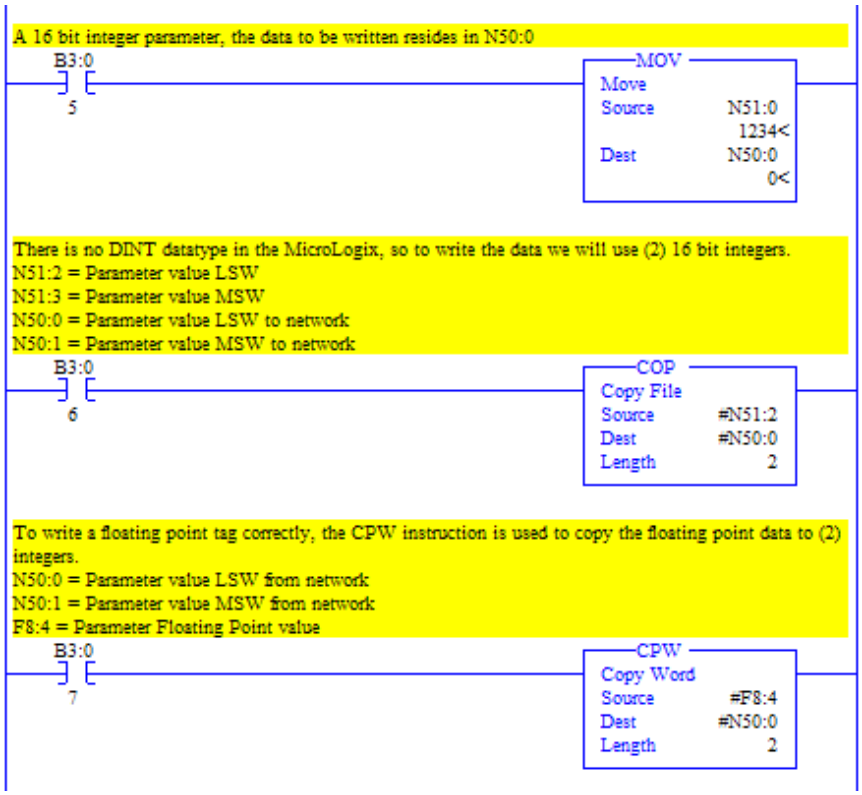

For 16-bit Integer Parameters – All PowerFlex 7-Class Drives

For 32-bit Integer Parameters – All PowerFlex 7-Class Drives

For 32-bit REAL (Floating Point) Parameters – PowerFlex 700S Drives

MicroLogix 1100/1400 Controller Example Ladder Logic Program to Read Multiple Parameters Using Generic Get/Set Attribute Service

A Custom scattered read message is used to read the values of multiple parameters. This read message example reads the values of these five parameters.

PowerFlex 7-Class Drive
• Parameter 001 - [Output Freq] • Parameter 003 - [Output Current] • Parameter 006 - [Output Voltage] • Parameter 012 - [DC Bus Voltage] • Parameter 017 - [Analog In1 Value]

See DPI Parameter Object on page 198 (Class code 0x93) for parameter numbering.

Important: See Table 17 on page 106 for limitations of PowerFlex 7-Class drives when using Class code 0x93 for explicit messaging.

Figure 69 - Example Ladder Logic to Read Multiple Parameters

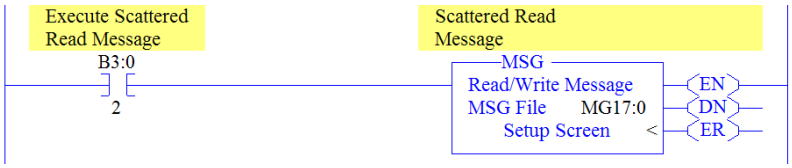

MicroLogix 1100/1400 Controller – Formatting a Message to Read Multiple Parameters Using Generic Get/Set Attribute Service

Figure 70 - Custom Scattered Read Message Configuration Screens

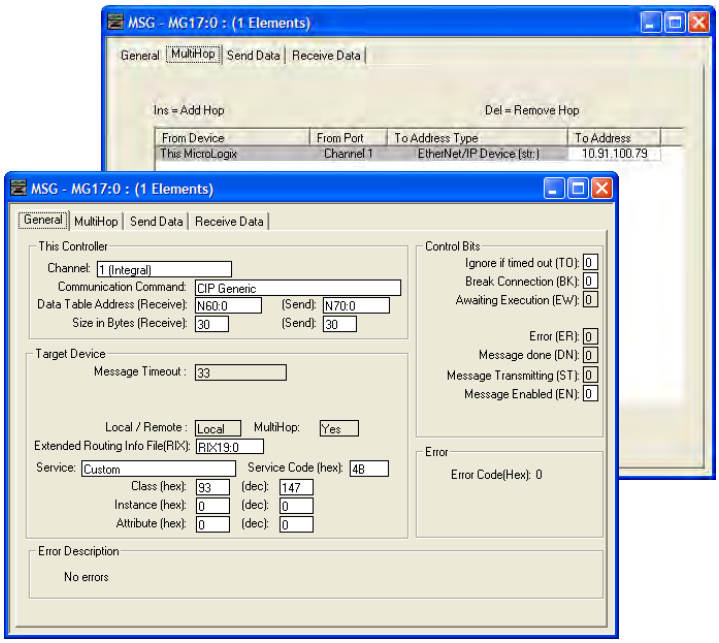

The following table identifies the data that is required in each box to configure a message to read multiple parameters.

General Tab	Example Value	Description
Channel	1	Controller port to which the network is connected.
Comm… Command	CIP Generic	Used to access the Parameter Object in the adapter.
Data Table Address	N60:0	An unused controller data table address containing the message instruction. This address is the starting word of the destination file.
Size in Bytes	30 (2)	Number of bytes to be transferred. Each byte size is an 8-bit integer.
Extended Routing…	RIX19:0	An unused routing information file for the controller.
Service (1)	Custom	Required for scattered messages.
Service Code	4B (Hex.)	Code for the requested service.
Class	93 or 9F (Hex.) (3)	Class ID for the DPI Parameter Object.
Instance	0 (Dec.)	Required for scattered messages.
Attribute	0 (Dec.)	Required for scattered messages.
MultiHop Tab	**Example Value**	**Description**
To Address	10.91.100.79	IP address of the adapter connected to the drive.

(1) The default setting for Service is 'Custom', enabling entry of a Service Code not available from the Service pull-down menu. When choosing a Service other than 'Custom' from the pull-down menu, an appropriate Hex. value is automatically assigned to the Service Code box which is dimmed (unavailable).

(2) In this example, we are reading five parameters. Each parameter being read requires three contiguous 16-bit words. Scattered read messages always assume that every parameter being read is a 32-bit parameter, regardless of its actual size. Therefore, the Size in Bytes must be set to 30. The data structure format is the same as shown on page 141. Maximum length is 66 words (132 bytes), which equates to 22 parameters. For parameter numbering, see DPI Parameter Object on page 198 (Class code 0x93).

(3) See Table 17 on page 106 for limitations of PowerFlex 7-Class drives when using DPI Parameter Object Class code 0x93 for explicit messaging.

MicroLogix 1100/1400 Controller Example Scattered Read Request Data

In this message example, we use the data table addresses in Figure 71 or Figure 71 to store the request values to be read from these drive parameters.

PowerFlex 7-Class Drive
• Parameter 001 - [Output Freq] • Parameter 003 - [Output Current] • Parameter 006 - [Output Voltage] • Parameter 012 - [DC Bus Voltage] • Parameter 017 - [Analog In1 Value]

See DPI Parameter Object on page 198 (Class code 0x93) for parameter numbering.

Figure 71 - Example Scattered Read Request Data File for PowerFlex 7-Class Drive

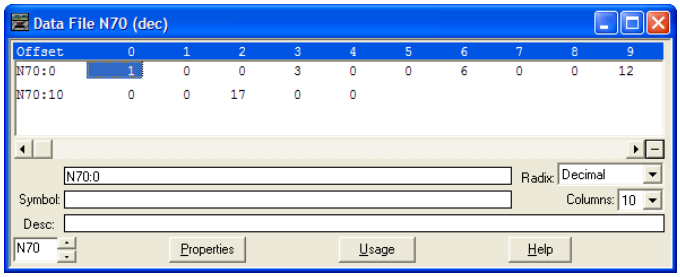

MicroLogix 1100/1400 Controller Example Scattered Read Response Data

In this message example, we use the data table addresses in Figure 72 to store the response values that were read from the requested drive parameters.

Figure 72 - Example Scattered Read Response Data File for PowerFlex 7-Class Drive

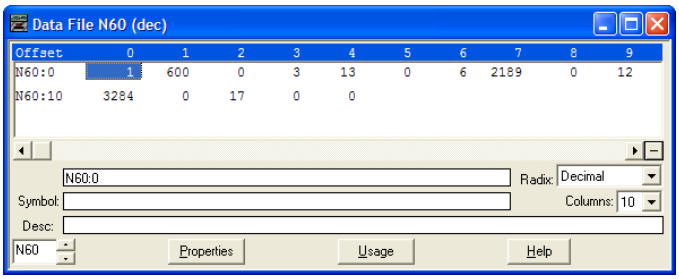

In this example, the parameters have the following values.

PowerFlex 7-Class Drive Parameter	Address	Read Value
1 - [Output Freq]	N60:1	32.5 Hz
3 - [Output Current]	N60:4	0.01 Amp
6 - [Output Voltage]	N60:7	118.7 VAC
12 - [DC Bus Voltage]	N60:10	329.2 VDC
17 - [Analog In2 Value]	N60:13	8.318 mA

MicroLogix 1100/1400 Controller Example Ladder Logic Program to Write Multiple Parameters Using Generic Get/Set Attribute Service

A Custom scattered write message is used to write to multiple parameters. This write message example writes the following values to these five parameters.

PowerFlex 7-Class Drive Parameter	Write Value
141 - [Accel Time 2]	11.1 Sec.
143 - [Decel Time 2]	22.2 Sec.
105 - [Preset Speed 5]	33.3 Hz.
106 - [Preset Speed 6]	44.4 Hz.
107 - [Preset Speed 7]	55.5 Hz.

See DPI Parameter Object on page 198 (Class code 0x93) for parameter numbering.

Important: See Table 17 on page 106 for limitations of PowerFlex 7-Class drives when using Class code 0x93 for explicit messaging.

Figure 73 - Example Ladder Logic to Write Multiple Parameters

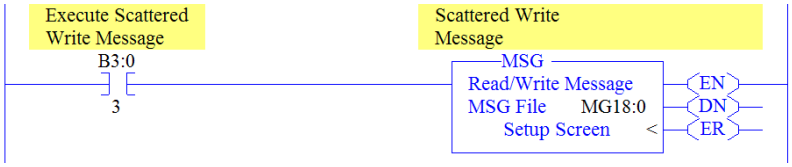

Important: If the explicit message scattered write must be written continuously, then use a separate Generic Set service explicit message single write for each parameter using DPI Parameter Object Class code 0x93 and attribute A (10 decimal; see page 133). Attribute A writes to RAM—not NVS (EEPROM) memory. This example scattered write message using attribute 0 writes to NVS. Over time, continuous writes will exceed the EEPROM life cycle and cause the drive to malfunction.

MicroLogix 1100/1400 Controller – Formatting a Message to Write Multiple Parameters Using Generic Get/Set Attribute Service

Figure 74 - Custom Scattered Write Multiple Message Configuration Screens

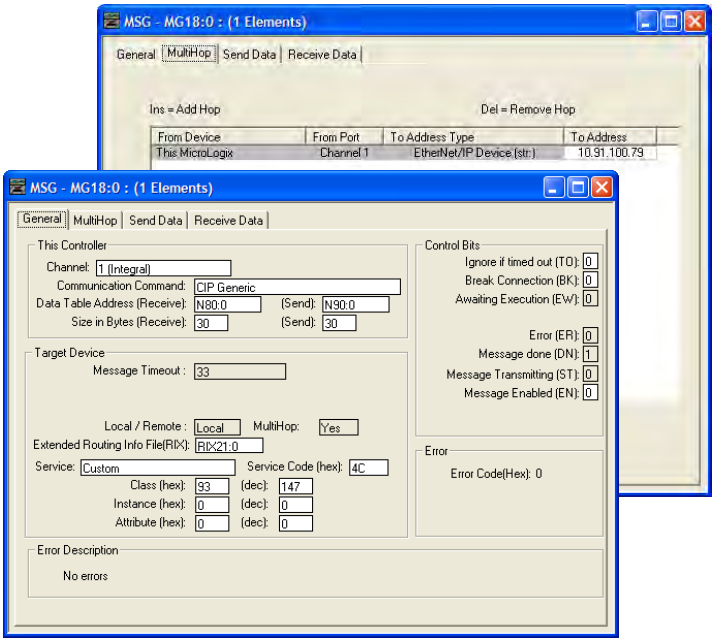

The following table identifies the data that is required in each box to configure a message to write multiple parameters.

General Tab	Example Value	Description
Channel	1	Controller port to which the network is connected.
Comm… Command	CIP Generic	Used to access the Parameter Object in the adapter.
Data Table Address	N80:0	An unused controller data table address containing the message instruction. This address is the starting word of the destination file.
Size in Bytes	30 (2)	Number of bytes to be transferred. Each byte size is an 8-bit integer.
Extended Routing…	RIX21:0	An unused routing information file for the controller.
Service (1)	Custom	Required for scattered messages.
Service Code	4C (Hex.)	Code for the requested service.
Class	93 or 9F (Hex.) (3)	Class ID for the DPI Parameter Object.
Instance	0 (Dec.)	Required for scattered messages.
Attribute	0 (Dec.)	Required for scattered messages.
MultiHop Tab	**Example Value**	**Description**
To Address	10.91.100.79	IP address of the adapter connected to the drive.

(1) The default setting for Service is 'Custom', enabling entry of a Service Code not available from the Service pull-down menu. When choosing a Service other than 'Custom' from the pull-down menu, an appropriate Hex. value is automatically assigned to the Service Code box which is dimmed (unavailable).

(2) In this example, we are writing to five parameters. Each parameter being written to requires three contiguous 16-bit words. Scattered write messages always assume that every parameter being written to is a 32-bit parameter, regardless of its actual size. Therefore, the Size in Bytes must be set to 30. The data structure format is the same as shown on page 120. Maximum length is 66 words (132 bytes), which equates to 22 parameters. For parameter numbering, see DPI Parameter Object on page 198 (Class code 0x93).

(3) See Table 17 on page 106 for limitations of PowerFlex 7-Class drives when using DPI Parameter Object Class code 0x93 for explicit messaging.

MicroLogix 1100/1400 Controller Example Scattered Write Request Data

In this message example, we use the data table addresses in Figure 75 to store the request values to be written to these drive parameters.

See DPI Parameter Object on page 198 (Class code 0x93) for parameter numbering.

Figure 75 or Figure 76 shows the parameter values.

Figure 75 - Example Scattered Write Request Data File for PowerFlex 7-Class Drive

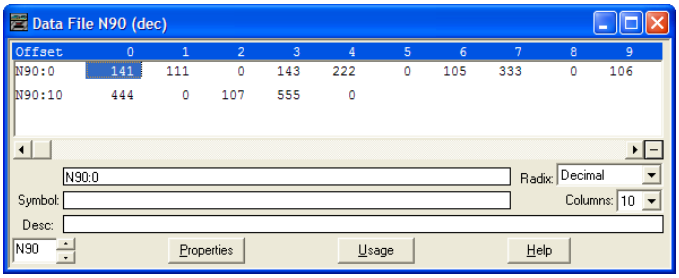

MicroLogix 1100/1400 Controller Example Scattered Write Response Data

In this message example, we use the data table addresses in Figure 76 to store the response values that were written to the requested drive parameters. Values of '0' indicate no errors occurred.

Figure 76 - Example Scattered Write Response Data File for PowerFlex 7-Class Drive

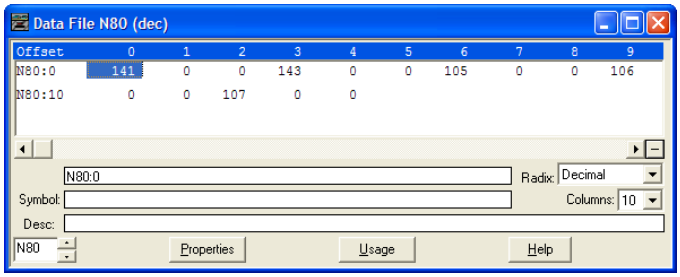

The results of the explicit message appear in the destination tag array N80 (Figure 76). Values of '0' indicate no errors occurred.

MicroLogix 1100/1400 Controller – Explanation of Request and Response Data for Read/Write Multiple Messaging

The data structures in Figure 77 and Figure 78 use 16-bit words and can accommodate up to 22 parameters in a single message. In the Response Message, a parameter number with the high bit set indicates that the associated parameter value field contains an error code (parameter number in response data will be negative).

Important: See Table 17 on page 106 for limitations of PowerFlex 7-Class drives when using Class code 0x93 for explicit messaging.

Figure 77 - Data Structures for Scattered Read Messages

	Request (Source Data)
Word 0	Parameter Number
1	Pad Word
2	Pad Word
3	Parameter Number
4	Pad Word
5	Pad Word
6	Parameter Number
7	Pad Word
8	Pad Word
9	Parameter Number
10	Pad Word
11	Pad Word
12	Parameter Number
13	Pad Word
14	Pad Word
⋮	

	Response (Destination Data)
Word 0	Parameter Number
1	Parameter Value LSW
2	Parameter Value MSW
3	Parameter Number
4	Parameter Value LSW
5	Parameter Value MSW
6	Parameter Number
7	Parameter Value LSW
8	Parameter Value MSW
9	Parameter Number
10	Parameter Value LSW
11	Parameter Value MSW
12	Parameter Number
13	Parameter Value LSW
14	Parameter Value MSW
⋮	

63	Parameter Number
64	Pad Word
65	Pad Word

63	Parameter Number
64	Parameter Value LSW
65	Parameter Value MSW

Figure 78 - Data Structures for Scattered Write Messages

	Request (Source Data)
Word 0	Parameter Number
1	Parameter Value LSW
2	Parameter Value MSW
3	Parameter Number
4	Parameter Value LSW
5	Parameter Value MSW
6	Parameter Number
7	Parameter Value LSW
8	Parameter Value MSW
9	Parameter Number
10	Parameter Value LSW
11	Parameter Value MSW
12	Parameter Number
13	Parameter Value LSW
14	Parameter Value MSW
⋮	
63	Parameter Number
64	Parameter Value LSW
65	Parameter Value MSW

	Response (Destination Data)
Word 0	Parameter Number
1	Pad Word
2	Pad Word
3	Parameter Number
4	Pad Word
5	Pad Word
6	Parameter Number
7	Pad Word
8	Pad Word
9	Parameter Number
10	Pad Word
11	Pad Word
12	Parameter Number
13	Pad Word
14	Pad Word
⋮	
63	Parameter Number
64	Pad Word
65	Pad Word

Troubleshooting

This chapter provides information for diagnosing and troubleshooting potential problems with the adapter and network.

Topic	Page
Understanding the Status Indicators	143
Port Status Indicator	144
Network Status Indicator	145
Link (LS1, LS2) Status Indicator	145
NET A Status Indicator	145
Hardware Reset via Node Switches	146
Viewing Adapter Diagnostic Items	146
Viewing and Clearing Events	149

Understanding the Status Indicators

The adapter has four status indicators. They can be viewed on the adapter or through the device cover.

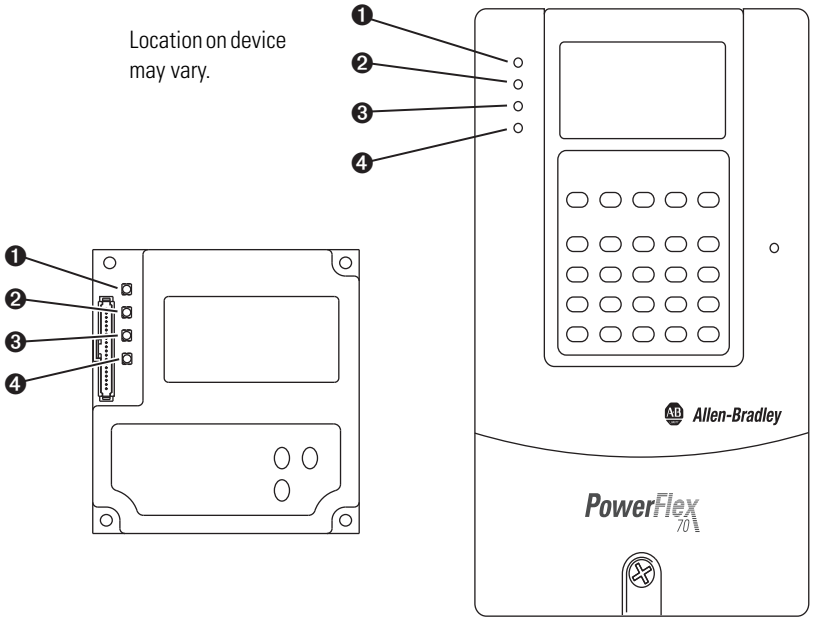

Item	Indicator Name	Description	See
❶	PS	DPI Connection Status	page 144
❷	NS	Network Status	page 145
❸	LS1	Link Status 1	page 145
❹	LS2	Link Status 2	page 145

Port Status Indicator

The LED indicates the status of the adapter's connection to the device as shown in the table below.

Status	Cause	Corrective Action
Off	No power	Securely connect the adapter to the drive using the internal interface (ribbon) cable.
Orange	Peripheral is Connected to an incompatible product, or no DPI ping events are detected.	Verify that cables are securely connected and not damaged. Replace cables if necessary. Cycle power to the device. Verify that Host is an Allen-Bradley compatible product.
Flashing Orange	Requesting DPI I/O Connections	No action required this is normal operation if No DPI IO is enabled
Flashing Green	Normal Operation (DPI connected) - No I/O, or PLC in Program	Place the scanner in RUN mode. Program the controller to recognize and transmit I/O to the adapter. Configure the adapter for the program in the controller. Normal behavior if no DPI I/O is enabled.
Green	Normal Operation (DPI connected) - I/O Operational	No action required.
Red	DPI Problem, Bad CRC of Adapter Parameters or Flash Program	Replace adapter
Flashing Red	DPI Failure or Failed power-on diagnostic test (hardware failure)	Clear faults in the adapter. Verify that all DPI cables on the drive are securely connected and not damaged. Replace cables if necessary. Verify that the DPI drive supports Datalinks. Configure the adapter to use a Datalink that is not already being used by another peripheral. Check mode switch settings. Cycle power to the device If cycling power does not correct the problem, the adapter parameter settings may have been corrupted. Reset defaults and reconfigure the adapter. If resetting defaults does not correct the problem, flash the adapter with the latest firmware release.
Flashing Green and Red	Flash update in progress	Normal during flash update process of application firmware

Network Status Indicator

The LED indicates the status of the adapter's connection to the device as shown in the table below.

Status	Cause	Corrective Action
Steady Off	No power OR No IP Address	Securely connect the adapter to the drive using the Internal Interface (ribbon) cable and to the network using an Ethernet cable. Correctly connect the Ethernet cable to the Ethernet connector. Set a unique IP address and disable BOOTP using a BOOTP server, or set a unique IP address by using adapter parameters. Apply power to the drive (or adapter if mounted in a DPI External Comms Kit).
Flashing Green	An IP address is configured, but no CIP connections are established, and an Exclusive Owner connection has not timed out	Place the controller in RUN mode, or apply power to the peer device that will send I/O. Program the controller or peer device to recognize and transmit I/O or make a messaging connection to the adapter. Configure the adapter for the program in the controller or the I/O from the peer device.
Steady Green	At least one CIP connection (any transport class) is established, and an Exclusive Owner connection has not timed out	No Action Required
Flashing Red	Connection has timed out see the "The EtherNet Adaptation of CIP" Specification sections 9-4.4 for detailed behavior description	Place the scanner in RUN mode, or apply power to the peer device that will send I/O. Check the IGMP Snooping/Ethernet Switches for correct operation. Check the amount of traffic on the network.
Steady Red	Duplicate IP Address detected	Configure the adapter to use a unique IP address and cycle power.
Orange	Adapter Failure (used in conjunction with PS orange)	Verify that cables are securely connected and not damaged. Replace cables if necessary. Cycle power to the drive. Verify that Host is a Scanport or Allen-Bradley compatible product. Replace Adapter
Flashing Green/Red	Self-test on power up	No action required

Link (LS1, LS2) Status Indicator

The LED indicates the status of the adapter's connection to the device as shown in the table below.

Status	Cause	Corrective Action
Blinking Yellow	Network at 10M Baud	Normal Operation
Blinking Green	Network at 100M Baudr	Normal Operation

NET A Status Indicator

This red/green bicolor LED indicates the status of the network connection as shown in the table below.

Status	Cause	Corrective Actions
Off	The adapter is not powered, the adapter is not properly connected to the network, the adapter needs an IP address, or BOOTP is enabled.	• Securely connect the adapter to the drive using the Internal Interface (ribbon) cable and to the network using an Ethernet cable. • Correctly connect the Ethernet cable to the Ethernet connector. • Set a unique IP address and disable BOOTP using a BOOTP server, or set a unique IP address by using adapter parameters. • Apply power to the drive (or adapter if mounted in a DPI External Comms Kit).
Steady Red	The adapter failed the duplicate IP address detection test.	• Configure the adapter to use a unique IP address and cycle power.
Flashing Red	An EtherNet/IP connection has timed out.	• Place the scanner in RUN mode, or apply power to the peer device that will send I/O. • Check the IGMP Snooping/Ethernet Switches for correct operation. • Check the amount of traffic on the network.

Status	Cause	Corrective Actions
Flashing Red/ Green	The adapter is performing a self-test.	No action required.
Flashing Green	The adapter is properly connected, has an IP address, and is connected to an EtherNet/IP network but does not have an I/O connection.	• Place the controller in RUN mode, or apply power to the peer device that will send I/O. • Program the controller or peer device to recognize and transmit I/O or make a messaging connection to the adapter. • Configure the adapter for the program in the controller or the I/O from the peer device.
Steady Green	The adapter is properly connected and communicating on the network to a controller.	No action required.

Hardware Reset via Node Switches

The special switch value of 888 allows the user to return the module to its factory default configuration. The setting of 888 shall reset all local configuration parameters on the adapter,

The setting of 888 is useful in situations where the user wishes to decommission an adapter (but may use it again later, e.g., as a spare module), or when the user wishes to commission a previously-used module that has unknown configuration parameters.

When the switches are set to 888, upon the next power up, a module shall behave as follows:

- Return to factory default settings local to the adapter.
- Cease communications on all communication ports.
- The Port Status LED shall transition to blinking red.
- The Network Status LED shall transition to off.

The purpose of the above behavior is to prevent the user from resetting the module and then never changing the switch setting from 888. Upon the next power up, the module would simply reset itself again.

Viewing Adapter Diagnostic Items

If you encounter unexpected communications problems, the adapter's diagnostic items may help you or Rockwell Automation personnel troubleshoot the problem. Adapter diagnostic items can be viewed with any of these drive configuration tools:

- LCD PowerFlex 7-Class HIM (Diagnostics/Device Items)
- Connected Components Workbench software, version 1.02 or later
- DriveExplorer software, version 2.01 or later
- DriveExecutive software, version 3.01 or later

Using the HIM to View Adapter Diagnostic Items

Step	Example Screen
1. Access parameters in the adapter. See Using the PowerFlex 7-Class HIM on page 28. 2. Press the ▲ or ▼ key to scroll to **Diagnostics**. 3. Press the ↵ (Enter) key to display the Diagnostics menu in the adapter. 4. Repeat steps 2 and 3 to enter the **Device Items** option. 5. Press the ▲ or ▼ key to scroll through the items.	Main Menu: Diagnostics Parameter Device Select Device Item # 3 Reference

Table 24 - Adapter Diagnostic Items

No.	Name	Description
1	Common Logic Cmd	The present value of the Common Logic Command being transmitted to the drive by this adapter.
2	Prod Logic Cmd	The present value of the Product Logic Command being transmitted to the drive by this adapter from the controller.
3	Reference	The present value of the Reference being transmitted to the drive by this adapter. Note that a 16-bit value will be sent as the Most Significant Word of the 32-bit field.
4	Common Logic Sts	The present value of the Common Logic Status being received from the drive by this adapter.
5	Prod Logic Sts	The present value of the Product Logic Status being received from the drive by this adapter to the controller.
6	Feedback	The present value of the Feedback being received from the drive by this adapter. Note that a 16-bit value will be sent as the Most Significant Word of the 32-bit field.
7	Datalink A1 In	The present value of respective Datalink In being transmitted to the drive by this adapter. (If not using a Datalink, this parameter should have a value of zero.)
8	Datalink A2 In	
9	Datalink B1 In	
10	Datalink B2 In	
11	Datalink C1 In	
12	Datalink C2 In	
13	Datalink D1 In	
14	Datalink D2 In	
15	Datalink A1 Out	The present value of respective Datalink Out being received from the drive by this adapter. (If the drive indicates a 16-bit datalink size, the value appears in the least significant 16 bits of this diagnostic item, and the most significant 16 bits of this diagnostic item are zero.)
16	Datalink A2 Out	
17	Datalink B1 Out	
18	Datalink B2 Out	
19	Datalink C1 Out	
20	Datalink C2 Out	
21	Datalink D1 Out	
22	Datalink D2 Out	
23	DPI Rx Errors	The present value of the DPI Receive error counter.
24	DPI Rx Error Max	The maximum value (since reset) of the DPI Receive error counter.
25	DPI Tx Errors	The present value of the DPI Transmit error counter.
26	DPI Tx Error Max	The maximum value (since reset) of the DPI Transmit error counter.
27	Boot Flash Count	Number of times the boot firmware in the adapter has been flash updated.
28	App Flash Count	Number of times the application firmware in the adapter has been flash updated.
29	M-S Input Size	Size of data transferred from the network to the drive.
30	M-S Output Size	Size of data transferred from the drive to the network.

No.	Name	Description
31 32 33 34 35 36	HW Addr 1 HW Addr 2 HW Addr 3 HW Addr 4 HW Addr 5 HW Addr 6	Decimal value of each byte in the adapter's Ethernet hardware address. 255:255:255:255:255:255 [HW Addr 1] [HW Addr 2] [HW Addr 3] [HW Addr 4] HW Addr 5] [HW Addr 6]
37 38 39 40	IP Addr Act 1 IP Addr Act 2 IP Addr Act 3 IP Addr Act 4	Value of each byte in the adapter's present IP address. A value of '0' appears if the adapter does not currently have an IP address. 255.255.255.255 [IP Addr Act 1] [IP Addr Act 2] [IP Addr Act 3] [IP Addr Act 4]
41 42 43 44	Subnet Act 1 Subnet Act 2 Subnet Act 3 Subnet Act 4	Value of each byte in the adapter's present subnet mask. A value of '0' appears if the adapter does not currently have a subnet mask. 255.255.255.255 [Subnet Act 1] [Subnet Act 2] [Subnet Act 3] [Subnet Act 4]
45 46 47 48	Gateway Act 1 Gateway Act 2 Gateway Act 3 Gateway Act 4	Value of each byte in the adapter's present gateway address. A value of '0' appears if the adapter does not currently have a gateway address. 255.255.255.255 [Gateway Act 1] [Gateway Act 2] [Gateway Act 3] [Gateway Act 4]
49	EN Rx Overruns	Number of receive buffer overruns reported by the Ethernet hardware.
50	EN Rx Packets	Number of Ethernet packets that the adapter has received.
51	EN Rx Errors	Number of receive errors reported by the Ethernet hardware.
52	EN Tx Packets	Number of Ethernet packets that the adapter has sent.
53	EN Tx Errors	Number of transmit errors reported by the Ethernet hardware.
54	Last TCP Reset	Last reason that the adapter reset or rejected a TCP/IP connection.
55	Missed IO Pkts	Number of incoming I/O connection packets that the adapter did not receive.
56	OPT Status	Operating status of optional I/O board in DPI External Comms Kit. For the meanings of the individual bits, see Viewing Adapter Diagnostic Items on page 146.
57	OPT RX Errors	Number of optional I/O board receive errors.
58	OPT FW Version	Firmware version of optional I/O board (in DPI External Comms Kit).

Viewing and Clearing Events

The adapter has an event queue to record significant events that occur in the operation of the adapter. When such an event occurs, an entry is put into the event queue. You can view the event queue with any of these drive configuration tools:

- LCD PowerFlex 7-Class HIM
- Connected Components Workbench software, version 1.02 or later
- DriveExplorer software, version 2.01 or later
- DriveExecutive software, version 1.01 or later
- Other clients using the DPI Fault object

The event queue can contain up to 32 entries. Eventually the event queue will become full, since its contents are retained through adapter resets. At that point, a new entry replaces the oldest entry. Only an event queue clear operation or adapter power cycle will clear the event queue contents.

Resetting the adapter to defaults has no effect on the event queue.

Using the HIM to View and Clear Events

Step	Example Screen
Viewing Events 1. Access parameters in the adapter. See Using the PowerFlex 7-Class HIM on page 28. 2. Press the ▲ or ▼ key to scroll to **Diagnostics**. 3. Press the ↵ (Enter) key to display the Diagnostics menu in the adapter. 4. Repeat steps 2 and 3 to enter the **Events** option and then **View Event Queue** option. 5. Press the ▲ or ▼ key to scroll through events. The most recent event is Event 1.	Main Menu: Diagnostics Parameter Device Select
Clearing Events 1. Access parameters in the adapter. See Using the PowerFlex 7-Class HIM on page 28. 2. Press the ▲ or ▼ key to scroll to **Diagnostics**. 3. Press the ↵ (Enter) key to display the Diagnostics menu in the adapter. 4. Repeat steps 2 and 3 to enter the **Events** option and then the **Clear Event** option or **Clr Event Queue** option. A message will pop up to confirm that you want to clear the message or queue. 5. Press the ↵ (Enter) key to confirm your request. If **Clr Event Queue** was selected, all event queue entries will then display 'No Event'.	Event Q: 1 E3 Ping Time Flt Dgn: Events View Event Queue Clear Event Clr Event Queue

Events

Many events in the event queue occur under normal operation. If you encounter unexpected communications problems, the events may help you or Allen-Bradley personnel troubleshoot the problem. The following events may appear in the event queue.

Table 25 - Adapter Events

Code	Event	Description
1	No Event	Empty event queue entry.
2	Device Power Up	Cold/hard boot.
3	Device Reset	Warm/soft boot.
4	Config CRC Error	Startup sequence detected corrupt NV storage.
5	App Updated	Startup sequence detected new application firmware in candidate area.
6	Boot Updated	Startup sequence detected new boot firmware in candidate area.
7	FATAL Error	A FATAL error was reported by the operating system.
8	DPI Bus Off	A bus-off condition is detected on DPI.
9	DPI Ping Timeout	No Ping message was received on DPI for longer than the maximum time allowed
10	DPI Port Invalid	The debounced DPI Pin ID is read as zero or seven after the peripheral has completed startup.
11	DPI Port Changed	The debounced DPI Pin ID has changed after the peripheral has completed startup.
12	DPI Host Reset	The drive issued a reset event.
13	DPI Baud 125K	The peripheral detects that the host is at 125 kbps.
14	DPI Baud 500K	The peripheral detects that the host is at 500 kbps.
15	DPI Host Invalid	Connected to a SCANport product and peripheral does not support a SCANport mode.
16	DPI Dup Port	Another peripheral with the same port number is already present.
17	DPI Type 0 Logon	The peripheral successfully logs in for Type 0 control.
18	DPI Type 0 Time	The peripheral has not received a Type 0 status message for longer than the maximum Type 0 time.
19	DPI DL Logon	The peripheral successfully logs into a data link.
20	DPI DL Error	The host rejects a login to a data link (e.g., data link not supported or already in use)
21	DPI DL Time	No Datalink status message is received on DPI for longer than the maximum time allowed
22	DPI Ctrl Disable	The peripheral has sent a “Soft Control Disable” command to the host.
23	DPI Ctrl Enable	The peripheral has sent a “Soft Control Enable” command to the host.
24	DPI Msg Timeout	A Client-Server message sent by the peripheral has not completed within one second.
25	DPI Manual Reset	Manual reset via DPI triggered.
31	Net Dup Address	IP address conflict.
32	Net Comm Fault	The peripheral detected a communications fault on the network.
33	Net Sent Reset	The peripheral received a reset from the network.
34	Net IO Close	An I/O connection from the network to the peripheral was closed.
35	Net Idle Fault	The peripheral is receiving "Idle" packets from the network.
36	Net IO Open	An I/O connection to the peripheral from the network has been opened.
37	Net IO Timeout	An I/O connection from the network to the Peripheral has timed out.
38	Net IO Size Err	EtherNet I/P I/O connection size mismatch error.
39	PCCC IO Close	The device sending PCCC Control messages to the Peripheral has set the PCCC Control Timeout to a value of zero.

Table 25 - Adapter Events (Continued)

Code	Event	Description
40	PCCC IO Open	The Peripheral has begun receiving PCCC Control messages (the PCCC Control Timeout was previously set to a non-zero value).
41	PCCC IO Timeout	The Peripheral has not received a PCCC control message for longer than the PCCC Control Timeout.
42	Msg Ctrl Open	The peripheral has sent a “Soft Control Enable“ command to the host.
43	Msg Ctrl Close	The peripheral has sent a “Soft Control Disable” command to the host.
44	Msg Ctrl Timeout	A Client-Server message sent by the peripheral has not completed within one second.
45	Peer IO Open	The peripheral has received the first peer I/O message.
46	Peer IO Timeout	The Peripheral has not received a Peer I/O message for longer than the Peer I/O Timeout.
56	Email Failed	E-mail send failure.
58	Adapter Defaulted	Adapter parameters has been reset to default.
61	Net Link 1 Up	Link has been established on Eth Port 1
62	Net Link 1 Down	Link was lost on Eth Port 1.
63	Net Link 2 Up	Link has been established on Eth Port 2
64	Net Link 2 Down	Link was lost on Eth Port 2.
67	Net Ring Up	The Device Level Ring (DLR) status is Normal.
68	Net Ring Down	The Device Level Ring (DLR) status is Faulted.
69	Invalid Net Cfg	The adapter’s network address configuration parameters are invalid, or the network address provided by the BOOTP or DHCP server is invalid.
70	DHCP Response	The adapter received a response to its DHCP request.

Notes:

Viewing the Adapter Web Pages

This chapter provides instructions on how to monitor the adapter and connected PowerFlex drive by using the adapter's web interface.

Topic	Page
Accessing the Adapter Web Home Page	153
Viewing the Web Pages	153
Process Display Home Page	156
Browse DPI Device Folder	156
Diagnostics Web Page	157
Administrative Web Pages	160

Future enhancements may result in adapter web pages that look different than the examples shown in this chapter.

Accessing the Adapter Web Home Page

After configuring the adapter, you can view its web pages. These pages present information about the adapter, the device to which it is connected, and other DPI devices connected to or installed in the device such as a HIM or I/O card.

The adapter can be configured to automatically send email messages to desired addresses when selected device faults occur and/or are cleared when the adapter rakes a communication or idle fault action. Bit 0 of **Parameter 57-[Web Features]** can be used to protect the configured settings. For more details, see page 162.

Viewing the Web Pages

The adapter can be configured to automatically send e-mail messages to desired addresses when selected drive faults occur and/or are cleared, and/or when the adapter takes a communication or idle fault action.

Bit 0 of **Parameter 57 - [Web Features]** can be used to protect the configured settings. For more details, see page 162.

1. On a computer with access to the EtherNet/IP network on which the adapter/device is installed, launch a web browser such as Microsoft™ Internet Explorer, version 5.0 or later.

The computer can access the adapter web pages if it is connected to:

– The same network as the adapter.

– A network with access to the adapter's network via a gateway device (for example, a router).

2. In the Address box, type the IP address of the adapter.
3. Press ENTER.

The adapter web Home Page (Figure 79) appears.

Important: Using the browser's View >Refresh function will always re-display the adapter home page while viewing any of the adapter's web pages.

Figure 79 - Adapter Web Home Page Example

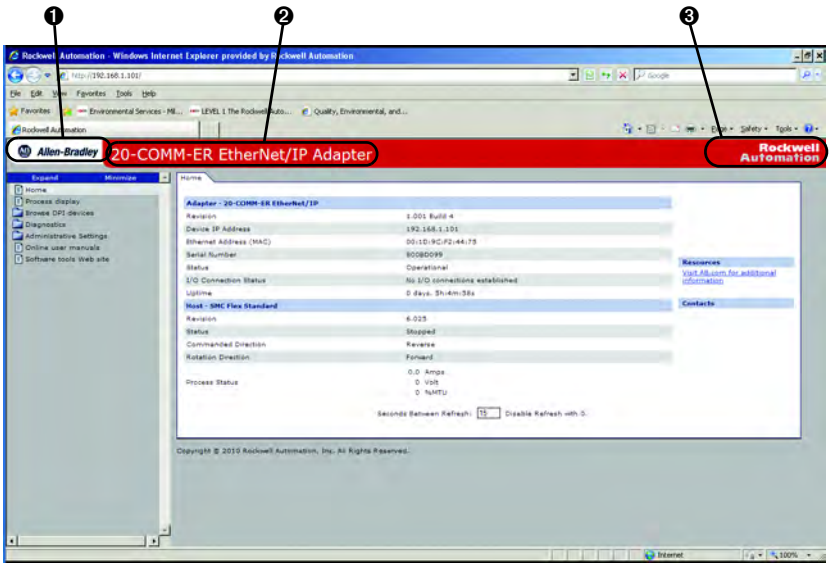

Title Bar on Adapter Web Pages

The title bar appears on the adapter Home Page and all of the adapter's other web pages. The title bar consists of three elements as shown in Figure 79.

Title Bar Element	Description
❶ Allen-Bradley logo	This logo is a hyperlink. Click it to view the ab.com web Home Page.
❷ Adapter Title	Shows the adapter type or user-configurable title.
❸ Rockwell Automation logo	This logo is a hyperlink. Click it to view the Rockwell Automation web Home Page.

Navigation Pane on Adapter Web Pages

The navigation pane appears on the left side of the adapter Home Page and all of the adapter's other web pages. The navigation pane consists of links and link folders which can be expanded or minimized. The following table shows all navigation pane links and link folders.

Navigation Pane Link/ Folder	Description
Home link	Click this link to view the adapter's Home Page (Figure 79).
Process display link	Click this link to view the host drive's Process Display pop-up window (Figure 81).
Browse DPI devices folder	Click this folder to expand and view the Port folders for all present DPI devices, including the drive, adapter, and other devices connected to the drive such as a HIM.
Diagnostics	Displays Ethernet/IP diagnostic information to aid in monitoring and troubleshooting the Ethernet/IP network.
Administrative Settings	Manage adapter settings such as password, IP address, and network configuration. Password Authorization is required to access subfolders.
Online user manuals link	Click this link to view Rockwell Automation's web page with documentation for drives, SMCs, and other devices.
Software tools Web site link	Click this link to view Allen-Bradley's web page with information about software tools such as DriveExplorer and DriveExecutive.

Figure 80 - Adapter Web Home Page Example

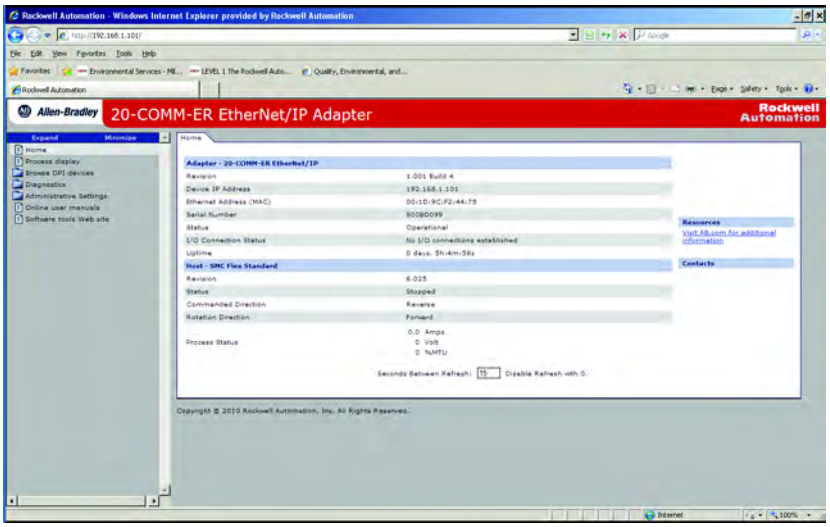

Process Display Home Page

The Process Display pop-up window dynamically shows the host drive's information. To view this window, click the 'Process display' link in the navigation pane.

Figure 81 - Example of Process Display Pop-up Window

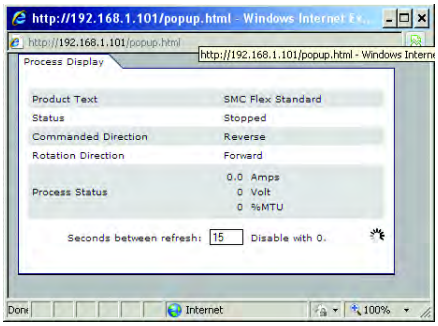

Browse DPI Device Folder

This folder gives access to the databases, fault and alarm queues and diagnostic data (if applicable) to all the devices connected to the DPI network.

Each Device on the DPI network has its own folder that has links to module information, parameters, diagnostic information, fault queues and alarm queue. The Parameters are further organized into the DPI groups defined for the specific device.

Figure 82 shows an example of an SMC-50 device acting as the DPI host on port 0 of the DPI network.

Figure 82 - Example of an SMC-50 Controller Acting as DPI Host

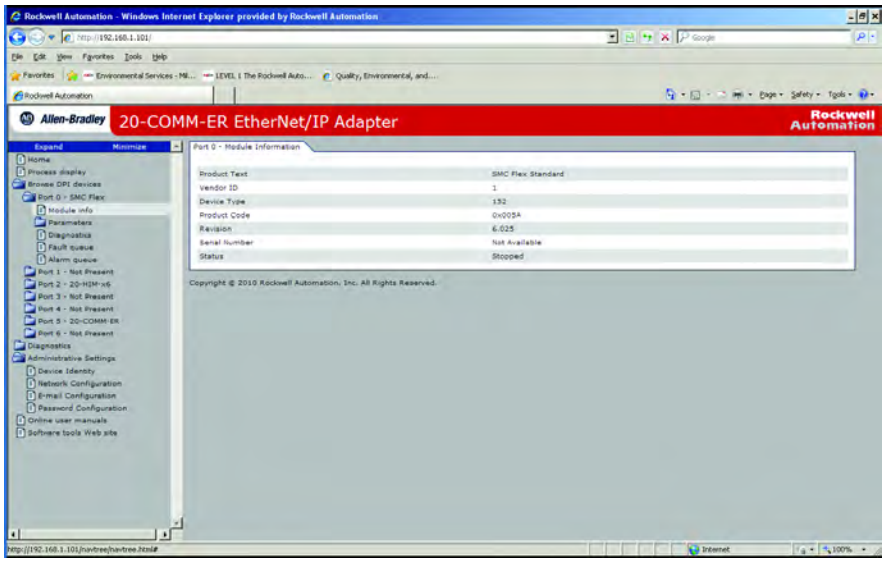

Parameters for the SMC-50 can be changed via the parameters web page by clicking on the Edit button near the bottom of the web page and entering the correct username and password when the authorization pop up window appears.

Note: PowerFlex drives on the network will not allow parameters to be changed via the Parameter Web page.

Figure 83 - Example of Parameter Web Page

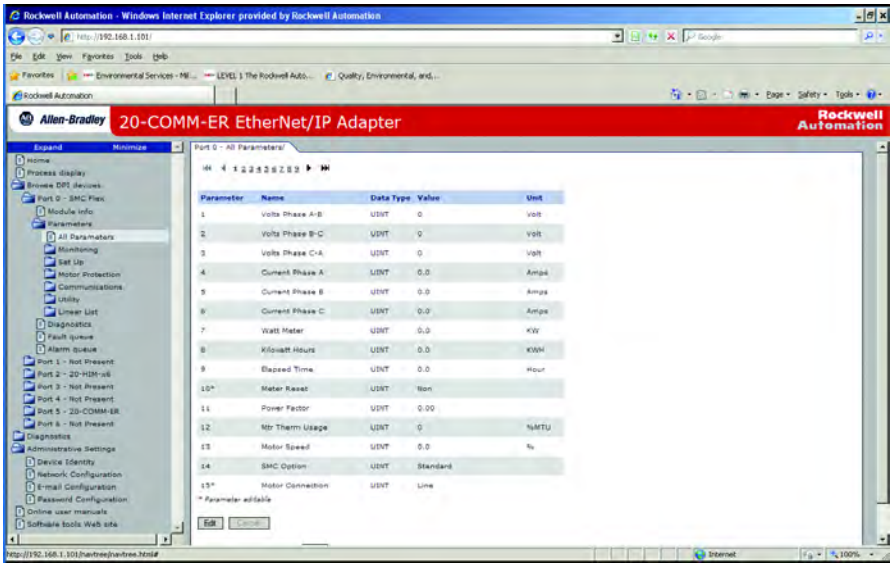

Diagnostics Web Page

The diagnostics web page provides the user with Adapter performance on the network detailing the configuration, status and traffic information about the EtherNet/IP network communications.

Diagnostic Overview link

This link provides a general overview of the Adapter's activity on the EtherNet/IP network.

Figure 84 - Diagnostic Overview Page

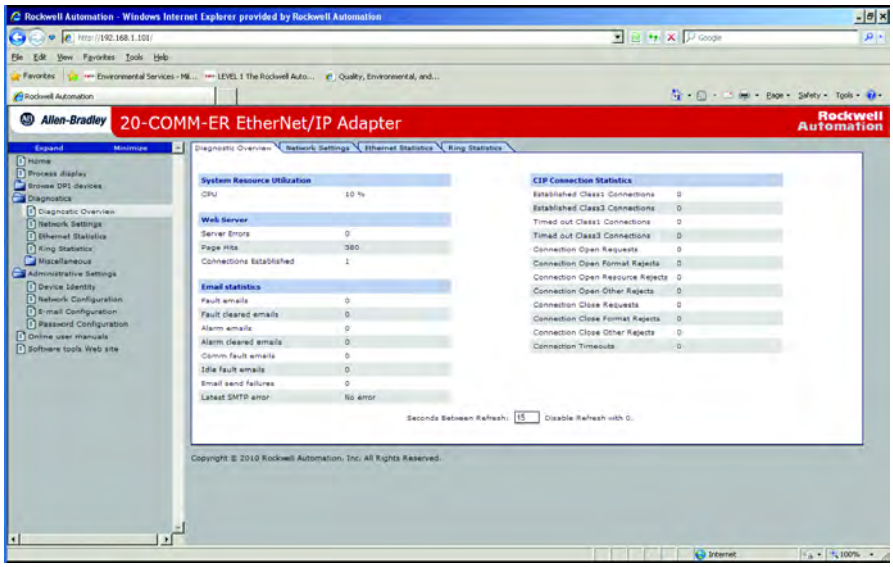

Network Setting Link

This link provides information about the adapter's Ethernet settings and network activities.

Figure 85 - Network Setting Page

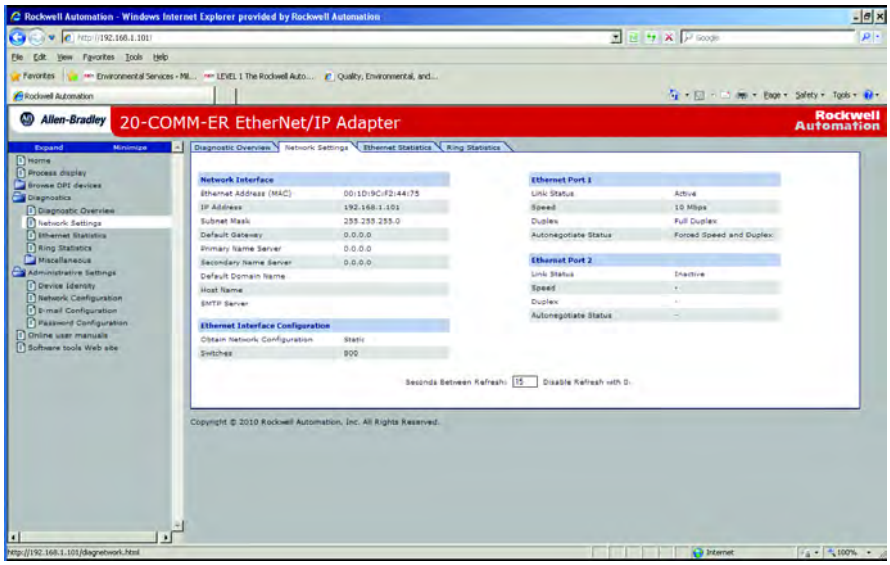

EtherNet/IP Statistics Link

This links displays information about the traffic activity on the EtherNet/IP network.

Figure 86 - EtherNet/IP Statistics Page

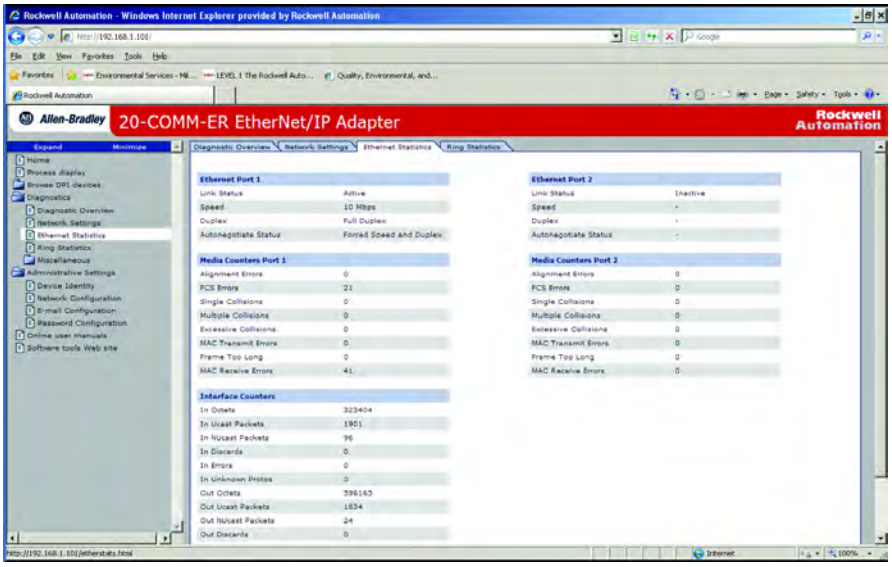

Ring Statistics link

This page displays configuration and status of the network and identifies the ring supervisor if the Ethernet network is configured as a ring.

Figure 87 - Ring Statistics Page

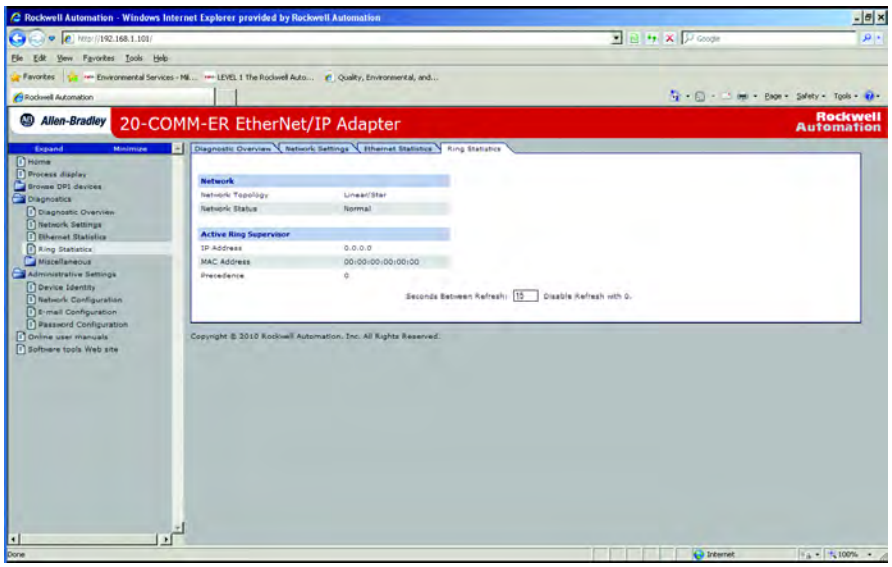

Crash Display Link

Figure 88 - Crash Display Page

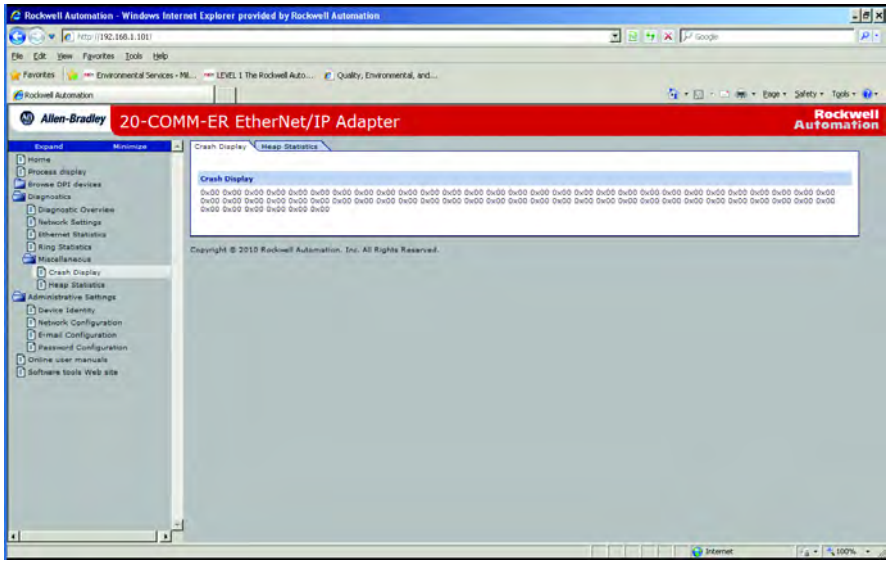

Heap Statistics Display link

Figure 89 - Heap Statistics Page

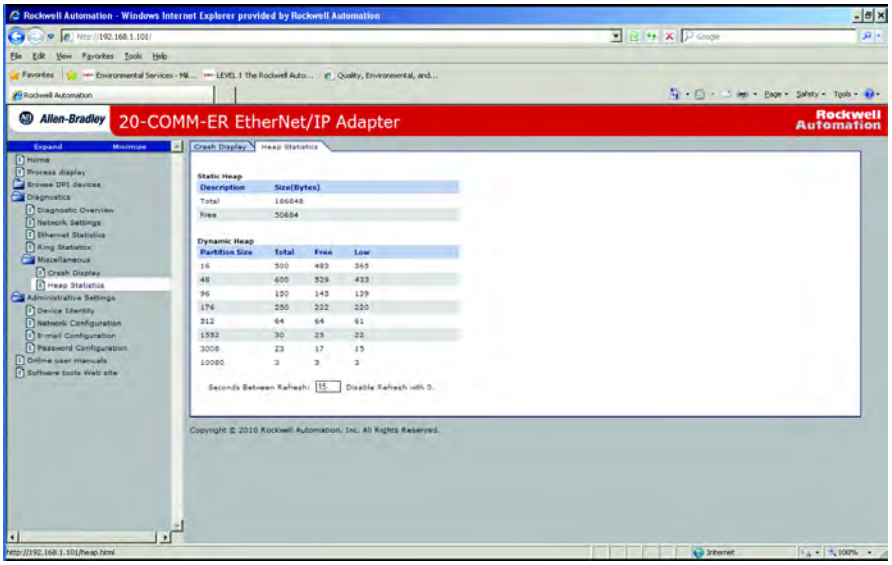

Administrative Web Pages

Administrative Web pages give the user access to the 20-COMM-ER module for the purpose of configuring the device for network operation and messaging.

Device Identity Link

The Device Identity link is used to give the Adapter an identity on the EtherNet/IP network that will be recognized by the user, software tools, and other devices on the network.

Figure 90 - Device Identity Page

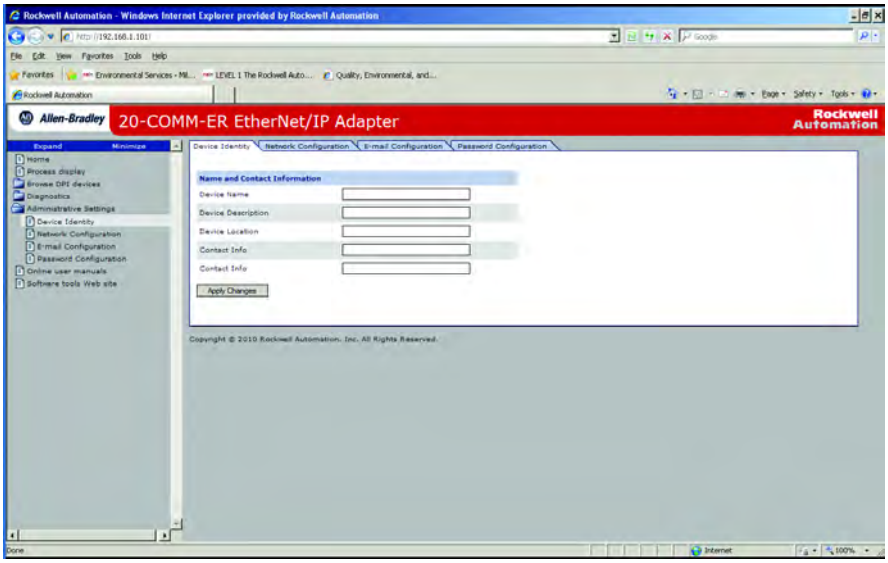

Network Configuration Link

The network configuration link allows setting of the TCP/IP layer of the Adapter, including IP address, Subnet mask, and gateway address.

Figure 91 - Network Configuration Page

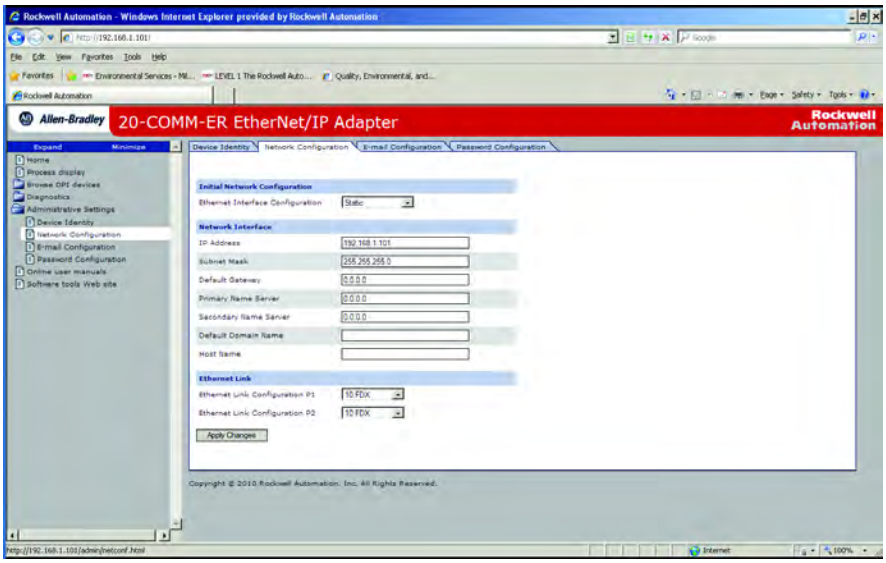

Email Configuration Link

The Configure E-mail Notification web page contains selections and data fields for configuring the adapter to automatically send email messages to desired addresses when selected types of events occur. To view this web page, click the 'Configure e-mail...' link (highlighted in Figure 92) in the navigation pane.

Figure 92 - E-mail Configuration Page

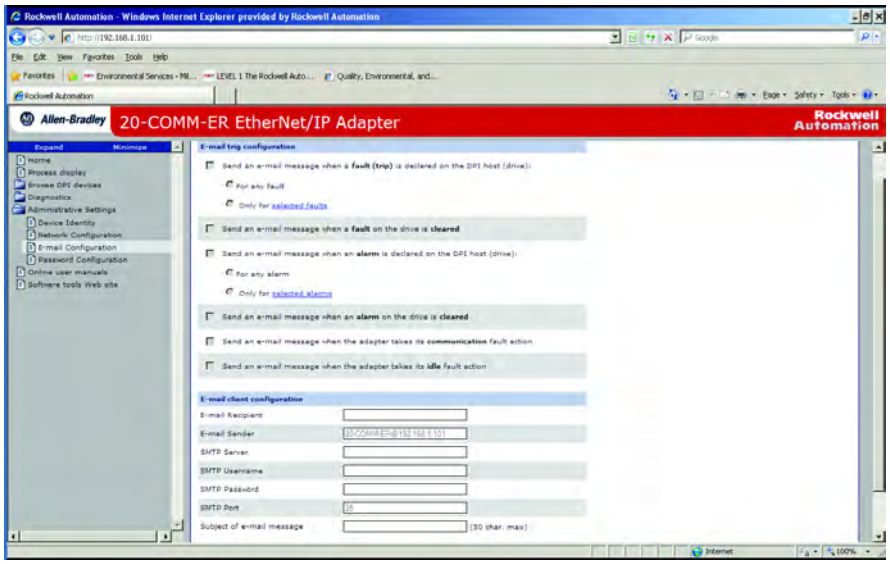

To configure email notification, perform the following steps.

1. Click the desired 'Send an e-mail message when...' check boxes you want to occur that will send email notification. If you only want email notification when selected faults/alarms occur:

   a. Click the respective fault and/or alarm radio buttons.

   b. Click the 'selected faults' link and/or 'selected alarms' link. Figure 93 shows an example faults configuration page.

Figure 93 - Example of Selected Faults Configuration Page

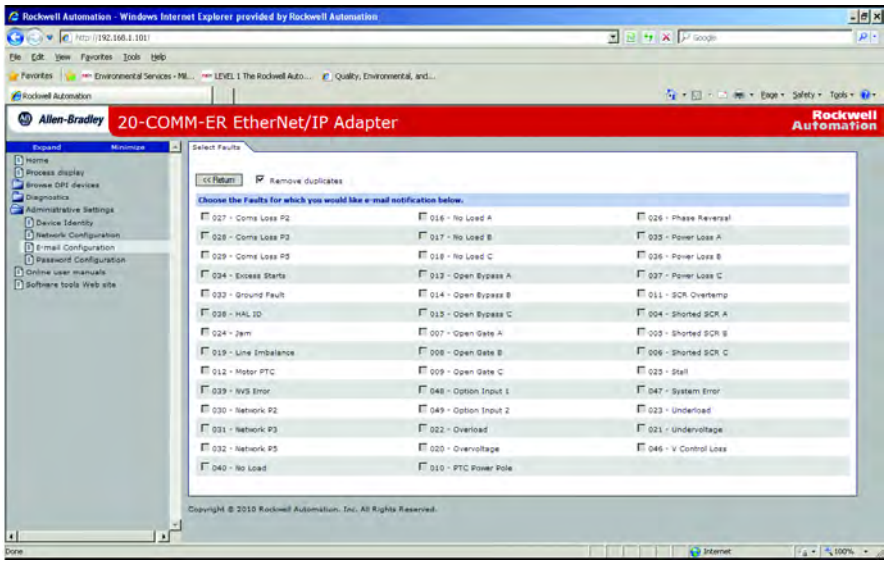

c. Click the desired fault/alarm check boxes.

d. Click **Apply Changes**.

e. Click the 'Back to E-mail Configuration Page' link.

2. Type the following information in their respective boxes.

Information	Description
'SMTP Server'	Type in the address of the mail server that will be used to deliver the email messages. (When the IP address is unknown, read the TIP shown below this table to determine the mail server address.)
'TO email recipient'	Type in addresses to where you want email messages to be sent. Multiple addresses can be used, but they must be separated by commas (comma delimited).
'Subject of e-mail message…'	Type in the desired subject text for the email message.

Figure 94 shows an example email message automatically sent by the adapter in response to selected events.

Figure 94 - Example of E-mail Message Sent by the Adapter

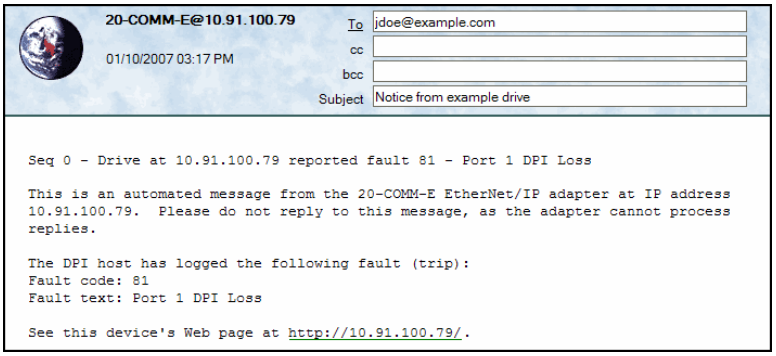

TIP To stop email messages, uncheck all of the 'Send an e-mail message when…' boxes.

Disabling the adapter web pages by setting the Web Pages Switch (SW2 in Figure 2) to the 'Disable Web' position will **not stop** the adapter from sending email messages.

Password Configuration

The Password Configuration Link allows the user to set or change a password. The factory default configuration is:

Username: Administrator

Password: <none> no password is set

Figure 95 - Password Configuration Page

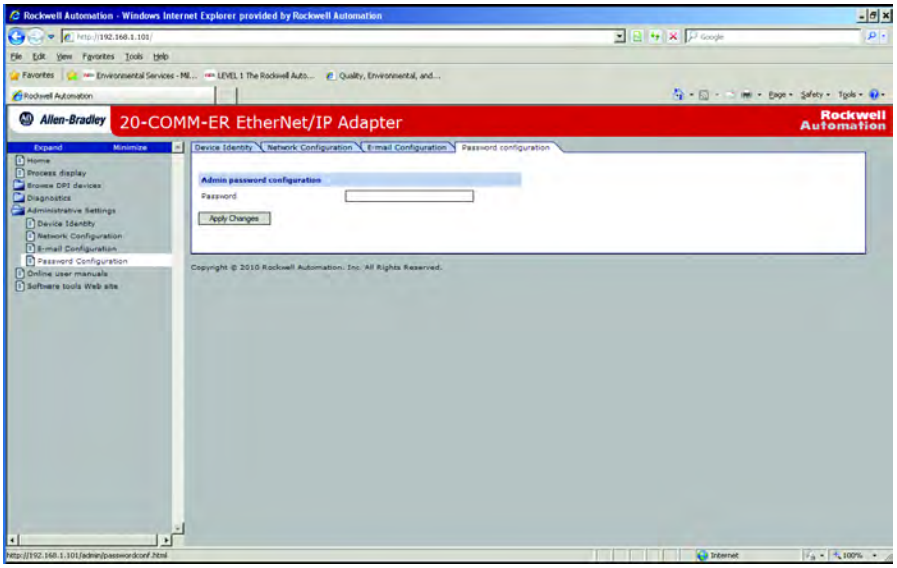

Notes:

Using the Adapter in a DPI External Comms Kit (20-XCOMM-DC-BASE)

This chapter provides information and examples that explain how to use the adapter in a DPI External Comms Kit (20-XCOMM-DC-BASE).

The adapter is typically installed in the internal communication slot on the PowerFlex 7-Class drive. However, an externally-mounted adapter may be desired when:

- The PowerFlex drive is already connected to an existing network, such as Remote I/O, and a second network is desired for a DriveExplorer or DriveExecutive software tool, data collection, and so forth.
- The PowerFlex drive is remotely located next to some I/O devices that also need to be networked. The DPI External Comms Kit has an option slot for general-purpose network I/O that a controller can use. Both the drive and I/O devices are handled as one node on the network to reduce the network node count.

Topic	Page
Installing the Adapter	167

Installing the Adapter

The adapter can be installed in a DPI External Comms Kit.

Figure 96 - Mounting and Connecting the Adapter

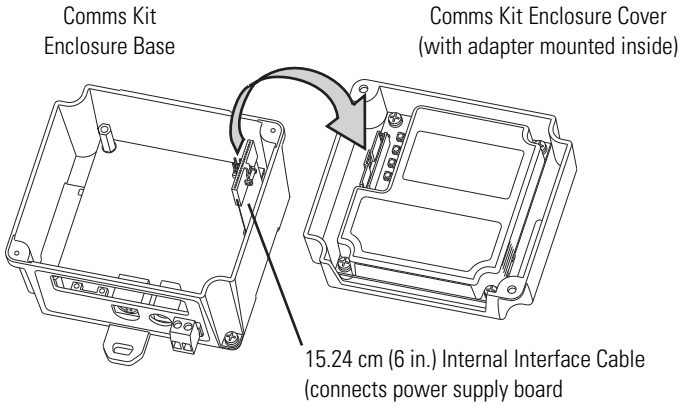

For more information, see the DPI External Communications Kit Installation Instructions, publication 20COMM-IN001.

Specifications

This appendix presents the specifications for the adapter.

Topic	Page
Communications	169
Electrical	169
Mechanical	170
Environmental	170
Regulatory Compliance	170

Communications

Network Protocol Data Rates	 EtherNet/IP 10 Mbps Full Duplex 10 Mbps Half Duplex 100 Mbps Full Duplex 100 Mbps Half Duplex
Connection Limits	30 TCP connections Two 'class 1' connections and 14 'class 3' connections are supported. The following activities use a CIP connection: • Explicit messaging where 'connected' is chosen (for example, in a checkbox in RSLogix 5000) The following activities **do not** use a CIP connection: • Explicit messaging-based control using PCCC or the Register or Assembly objects, including the PLC-5, SLC 500, and MicroLogix 1100 examples in Chapter 4 • Explicit messaging where 'connected' is **not** chosen, which is typically the default
Requested Packet Interval (RPI)	2 ms minimum
Drive Protocol Data Rates	 DPI 125 kbps or 500 kbps

Electrical

Consumption Drive Network	 482 mA at 5V DC supplied by the host (drive or DPI External Comms Kit) N/A

Mechanical

Dimensions Height Length Width	 19 mm (0.75 inches) 86 mm (3.39 inches) 78.5 mm (3.09 inches)
Shipping Weight	150 g (5.2 oz.)

Environmental

Temperature Operating Storage	 -10…50 °C (14…122 °F) -40…85 °C (-40…185 °F)
Relative Humidity	5…95% non-condensing
Atmosphere	**Important:** The adapter **must not** be installed in an area where the ambient atmosphere contains volatile or corrosive gas, vapors or dust. If the adapter is not going to be installed for a period of time, it must be stored in an area where it will not be exposed to a corrosive atmosphere.

Regulatory Compliance

Certification	Drive Specification	SMC Specification
UL	UL508C	UL508
cUL	CSA C22.2 No. 14-2010	CSA C22.2 No. 14-10
CE	EN61800-3	EN60947-4-2
CTick	EN61800-3	EN60947-4-2

NOTE: This is a product of category C2 according to IEC 61800-3. In a domestic environment this product may cause radio interference in which case supplementary mitigation measures may be required.

Adapter Parameters

This appendix provides information about the adapter parameters.

Topic	Page
About Parameter Numbers	171
Parameter List	171

About Parameter Numbers

The parameters in the adapter are numbered consecutively. However, depending on which configuration tool you use, they may have different numbers.

Configuration Tool	Numbering Scheme
• HIM • Connected Components Workbench software • DriveExplorer • DriveExecutive	The adapter parameters begin with parameter 01. For example, **Parameter 01 - [DPI Port]** is parameter 01 as indicated by this manual.
• Explicit Messaging	See Chapter 6, Using Explicit Messaging and Appendix C, EtherNet/IP Objects for details.

Parameter List

Parameter		
No.	**Name and Description**	**Details**
01	**[DPI Port]** Displays the port to which the adapter is connected. This will usually be port 5.	Default: 5 Minimum: 0 Maximum: 7 Type: Read Only
02	**[DPI Data Rate]** Displays the data rate used by the drive. This data rate is set in the drive and the adapter detects it.	Default: 0 = 125 kbps Values: 0 = 125 kbps 1 = 500 kbps Type: Read Only
03	**[BOOTP/DHCP]** Configures the adapter to use BOOTP so that you can set its IP address, subnet mask, and gateway address with a BOOTP server.	Default: 1 = Enabled Values: 0 = Disabled 1 = Enabled Type: Read/Write Reset Required: Yes

Parameter No.	Name and Description	Details
04 05 06 07	**[IP Addr Cfg 1]** **[IP Addr Cfg 2]** **[IP Addr Cfg 3]** **[IP Addr Cfg 4]** Sets the IP address bytes for the adapter's network address when **Parameter 03 - [BOOTP]** is set to '0' (Disabled). 255 . 255 . 255 . 255 [IP Addr Cfg 1] [IP Addr Cfg 2] [IP Addr Cfg 3] [IP Addr Cfg 4]	Default: 0 Default: 0 Default: 0 Default: 0 Minimum: 0 Maximum: 255 Type: Read/Write Reset Required: Yes
08 09 10 11	**[Subnet Cfg 1]** **[Subnet Cfg 2]** **[Subnet Cfg 3]** **[Subnet Cfg 4]** Sets the subnet mask bytes for the adapter's network address when **Parameter 03 - [BOOTP]** is set to '0' (Disabled). 255 . 255 . 255 . 255 [Subnet Cfg 1] [Subnet Cfg 2] [Subnet Cfg 3] [Subnet Cfg 4]	Default: 0 Default: 0 Default: 0 Default: 0 Minimum: 0 Maximum: 255 Type: Read/Write Reset Required: Yes
12 13 14 15	**[Gateway Cfg 1]** **[Gateway Cfg 2]** **[Gateway Cfg 3]** **[Gateway Cfg 4]** Sets the gateway address bytes for the adapter's network address when **Parameter 03 - [BOOTP]** is set to '0' (Disabled). 255 . 255 . 255 . 255 [Gateway Cfg 1] [Gateway Cfg 2] [Gateway Cfg 3] [Gateway Cfg 4]	Default: 0 Default: 0 Default: 0 Default: 0 Minimum: 0 Maximum: 255 Type: Read/Write Reset Required: Yes
16	**[EN P1 Rate Cfg]** Sets the speed and duplex network data rate at which the adapter communicates. (Updates **Parameter 17 - [EN P1 Rate Act]** after a reset.)	Default: 0 = Autodetect Values: 0 = Autodetect 1 = 10 Mbps Full 2 = 10 Mbps Half 3 = 100 Mbps Full 4 = 100 Mbps Half Type: Read/Write Reset Required: Yes

Parameter No.	Name and Description	Details
17	**[EN P1 Rate Act]** Displays the actual speed and duplex network data rate used by the adapter.	Default: 0 = No Link Values: 0 = No Link 1 = 10 Mbps Full 2 = 10 Mbps Half 3 = 100 Mbps Full 4 = 100 Mbps Half Type: Read Only
18	**[EN P2 Rate Cfg]** Sets the speed and duplex network data rate at which the adapter communicates. (Updates **Parameter 19 - [EN PI Rate Act]** after a reset.)	Default: 0 = Autodetect Values: 0 = Autodetect 1 = 10 Mbps Full 2 = 10 Mbps Half 3 = 100 Mbps Full 4 = 100 Mbps Half Type: Read/Write Reset Required: Yes
19	**[EN P2 Rate Act]** Displays the actual speed and duplex network data rate used by the adapter.	Default: 0 = No Link Values: 0 = No Link 1 = 10 Mbps Full 2 = 10 Mbps Half 3 = 100 Mbps Full 4 = 100 Mbps Half Type: Read Only
20	**[Ref/Fdbk Size]** Displays the size of the Reference/Feedback. The drive determines the size of the Reference/ Feedback.	Default: 0 = 16-bit Values: 0 = 16-bit 1 = 32-bit Type: Read Only
21	**[Datalink Size]** Displays the size of each Datalink word. The drive determines the size of Datalinks.	Default: 0 = 16-bit Values: 0 = 16-bit 1 = 32-bit Type: Read Only
22	**[Reset Module]** No action if set to ‘0’ (Ready). Resets the adapter if set to ‘1’ (Reset Module). Restores the adapter to its factory default settings if set to ‘2’ (Set Defaults). This parameter is a command. It will be reset to ‘0’ (Ready) after the command has been performed. **ATTENTION:** Risk of injury or equipment damage exists. If the adapter is transmitting I/O that controls the drive, the drive may fault when you reset the adapter. Determine how your drive will respond before resetting a connected adapter.	Default: 0 = Ready Values: 0 = Ready 1 = Reset Module 2 = Set Defaults Type: Read/Write Reset Required: No

Parameter No.	Name and Description	Details
23	**[Comm Flt Action]** Sets the action that the adapter and drive will take if the adapter detects that I/O communication has been disrupted. This setting is effective only if I/O that controls the drive is transmitted through the adapter. When communication is re-established, the drive will automatically receive commands over the network again.	Default: 0 = Fault Values: 0 = Fault 1 = Stop 2 = Zero Data 3 = Hold Last 4 = Send Flt Cfg Type: Read/Write Reset Required: No

ATTENTION: Risk of injury or equipment damage exists. **Parameter 23 - [Comm Flt Action]** lets you determine the action of the adapter and connected drive if I/O communication is disrupted. By default, this parameter faults the drive. You can set this parameter so that the drive continues to run, however, precautions should be taken to verify that the setting of this parameter does not create a risk of injury or equipment damage. When commissioning the drive, verify that your system responds correctly to various situations (for example, a disconnected cable).

24	**[Idle Flt Action]** Sets the action that the adapter and drive will take if the adapter detects that the controller is in program mode or faulted. This setting is effective only if I/O that controls the drive is transmitted through the adapter. When the controller is put back in Run mode, the drive will automatically receive commands over the network again.	Default: 0 = Fault Values: 0 = Fault 1 = Stop 2 = Zero Data 3 = Hold Last 4 = Send Flt Cfg Type: Read/Write Reset Required: No

ATTENTION: Risk of injury or equipment damage exists. **Parameter 24 - [Idle Flt Action]** lets you determine the action of the adapter and connected drive when the controller is idle. By default, this parameter faults the drive. You can set this parameter so that the drive continues to run, however, precautions should be taken to verify that the setting of this parameter does not create a risk of injury or equipment damage. When commissioning the drive, verify that your system responds correctly to various situations (for example, a faulted controller).

25	**[DPI I/O Cfg]** Sets the I/O that is transferred through the adapter.	Default: xxx0 0001 Bit Values: 0 = I/O Disabled 1 = I/O Enabled Type: Read/Write Reset Required: Yes

Bit Definition	Not Used	Not Used	Not Used	Datalink D	Datalink C	Datalink B	Datalink A	Cmd/Ref
Default	x	x	x	0	0	0	0	1
Bit	7	6	5	4	3	2	1	0

Parameter No.	Name and Description	Details
26	**[DPI I/O Act]** Displays the I/O that the adapter is actively transmitting. The value of this parameter will usually be equal to the value of **Parameter 25 - [DPI I/O Cfg]**.	Default: xxx0 0001 Bit Values: 0 = I/O Disabled 1 = I/O Enabled Type: Read Only

Bit Definition	Not Used	Not Used	Not Used	Datalink D	Datalink C	Datalink B	Datalink A	Cmd/Ref
Default	x	x	x	0	0	0	0	1
Bit	7	6	5	4	3	2	1	0

Parameter No.	Name and Description	Details
27	**[Flt Cfg Logic]** Sets the Logic Command data that is sent to the drive if any of the following is true: • **Parameter 23 - [Comm Flt Action]** is set to '4' (Send Flt Cfg) and I/O communication is disrupted. • **Parameter 24 - [Idle Flt Action]** is set to '4' (Send Flt Cfg) and the controller is idle. • **Parameter 43 - [Peer Flt Action]** is set to '4' (Send Flt Cfg) and peer I/O communication is disrupted. The bit definitions will depend on the product to which the adapter is connected. See Appendix D or the documentation for the drive being used.	Default: 0000 0000 0000 0000 Minimum: 0000 0000 0000 0000 Maximum: 1111 1111 1111 1111 Type: Read/Write Reset Required: No
28	**[Flt Cfg Ref]** Sets the Reference data that is sent to the drive if any of the following is true: • **Parameter 23 - [Comm Flt Action]** is set to '4' (Send Flt Cfg) and I/O communication is disrupted. • **Parameter 24 - [Idle Flt Action]** is set to '4' (Send Flt Cfg) and the controller is idle. • **Parameter 43- [Peer Flt Action]** is set to '4' (Send Flt Cfg) and peer I/O communication is disrupted.	Default: 0 Minimum: 0 Maximum: 4294967295 Type: Read/Write Reset Required: No **Important:** If the drive uses a 16-bit Reference, the most significant word of this value must be set to zero (0) or a fault will occur.

Parameter No.	Name and Description	Details
29 30 31 32 33 34 35 36	**[Flt Cfg A1 In]** **[Flt Cfg A2 In]** **[Flt Cfg B1 In]** **[Flt Cfg B2 In]** **[Flt Cfg C1 In]** **[Flt Cfg C2 In]** **[Flt Cfg D1 In]** **[Flt Cfg D2 In]** Sets the data that is sent to the Datalink in the drive if any of the following is true: • **Parameter 23 - [Comm Flt Action]** is set to '4' (Send Flt Cfg) and I/O communication is disrupted. • **Parameter 24 - [Idle Flt Action]** is set to '4' (Send Flt Cfg) and the controller is idle. • **Parameter 43 - [Peer Flt Action]** is set to '4' (Send Flt Cfg) and peer I/O communication is disrupted.	Default: 0 Default: 0 Default: 0 Default: 0 Default: 0 Default: 0 Default: 0 Default: 0 Minimum: 0 Maximum: 4294967295 Type: Read/Write Reset Required: No **Important:** If the drive uses 16-bit Datalinks, the most significant word of this value must be set to zero (0) or a fault will occur.
37	**[M-S Input]** Sets the Master-Slave input data. This data is produced by the scanner and consumed by the adapter.	Default: xxx0 0001 Bit Values: 0 = I/O disabled 1 = I/O enabled Type: Read/Write Reset Required: Yes
38	**[M-S Output]** Sets the Master-Slave output data. This data is produced by the adapter and consumed by the Master device (for example, scanner).	Default: xxx0 0001 Bit Values: 0 = I/O disabled 1 = I/O enabled Type: Read/Write Reset Required: Yes
39	**[Ref Adjust]** Sets the percent scale factor for the Reference received from the network.	Default: 100.00% Minimum: 0.00% Maximum: 200.00% Type: Read/Write Reset Required: No

Bit Definition	Not Used	Not Used	Not Used	Datalink D Input	Datalink C Input	Datalink B Input	Datalink A Input	Cmd/Ref
Default	x	x	x	0	0	0	0	1
Bit	7	6	5	4	3	2	1	0

Bit Definition	Not Used	Not Used	Not Used	Datalink D Output	Datalink C Output	Datalink B Output	Datalink A Output	Cmd/Ref
Default	x	x	x	0	0	0	0	1
Bit	7	6	5	4	3	2	1	0

ATTENTION: To guard against equipment damage and/or personal injury, note that changes to **Parameter 39 - [Ref Adjust]** take effect immediately. A drive receiving its Reference from the adapter will receive the newly scaled Reference, resulting in a change of speed.

Parameter No.	Name and Description	Details
40 41	**[Peer A Input]** **[Peer B Input]** Sets the destination of the peer I/O input. The adapter receives this data from the network and sends it to the drive. **Important:** Changes to these parameters are ignored when **Parameter 49 - [Peer Inp Enable]** is set to ‘1’ (On). **Important:** If the parameter is set to input a Logic Command, configure the mask in **Parameter 42 - [Peer Cmd Mask]** so that the desired bits from the peer device are used.	Default: 0 = Off Default: 0 = Off Values: 0 = Off 1 = Cmd/Ref 2 = Datalink A Input 3 = Datalink B Input 4 = Datalink C Input 5 = Datalink D Input Type: Read/Write Reset Required: No
42	**[Peer Cmd Mask]** Sets the mask for the Logic Command word when it is received through peer input. If the mask bit is ‘0’ (Off), the command bit is ignored and not used. If the mask bit is ‘1’ (On), the command bit is checked and used. **Important:** If the adapter receives a Logic Command from both a Master device and a peer device, each command bit must have only one source. The source of command bits set to ‘0’ will be the Master device. The source of command bits set to ‘1’ will be the peer device.	Default: 0000 0000 0000 0000 Minimum: 0000 0000 0000 0000 Maximum: 1111 1111 1111 1111 Values: 0 = Ignore bit 1 = Check bit Type: Read/Write Reset Required: Yes
43	**[Peer Flt Action]** Sets the action that the adapter and drive will take if the adapter detects that peer I/O communication has been disrupted. This setting is effective only if I/O is transmitted through the adapter.	Default: 0 = Fault Values: 0 = Fault 1 = Stop 2 = Zero Data 3 = Hold Last 4 = Send Flt Cfg Type: Read/Write Reset Required: No

ATTENTION: Risk of injury or equipment damage exists. **Parameter 43 - [Peer Flt Action]** lets you determine the action of the adapter and connected drive if the adapter is unable to communicate with the designated peer. By default, this parameter faults the drive. You can set this parameter so that the drive continues to run, however, precautions should be taken to verify that the setting of this parameter does not create a risk of injury or equipment damage. When commissioning the drive, verify that your system responds correctly to various situations (for example, a disconnected cable).

Parameter No.	Name and Description	Details
44 45 46 47	**[Peer Inp Addr 1]** **[Peer Inp Addr 2]** **[Peer Inp Addr 3]** **[Peer Inp Addr 4]** Sets the IP address bytes that specifies the device from which the adapter receives (consumes) peer I/O data. 255 . 255 . 255 . 255 [Peer Inp Addr 1] [Peer Inp Addr 2] [Peer Inp Addr 3] [Peer Inp Addr 4] **Important:** The Peer Inp Addr must be on the same subnet as the 20-COMM-ER. See page 226 for more information. Changes to these parameters are ignored when **Parameter 49 - [Peer Inp Enable]** is set to '1' (On).	Default: 0 Default: 0 Default: 0 Default: 0 Minimum: 0 Maximum: 255 Type: Read/Write Reset Required: No
48	**[Peer Inp Timeout]** Sets the timeout for a peer I/O connection. If the time is reached without the adapter receiving (consuming) a message, the adapter will respond with the action specified in **Parameter 43 - [Peer Flt Action]**. In an adapter receiving (consuming) peer I/O, the value of this parameter must be greater than the product of the value of **Parameter 54 - [Peer Out Time]** in the adapter transmitting (producing) peer I/O multiplied by the value of **Parameter 55 - [Peer Out Skip]** in the adapter transmitting (producing) peer I/O.	Default: 10.00 Seconds Minimum: 0.01 Seconds Maximum: 10.00 Seconds Type: Read/Write Reset Required: No
49	**[Peer Inp Enable]** Determines if peer I/O input is on or off.	Default: 0 = Off Values: 0 = Off 1 = On Type: Read/Write Reset Required: No
50	**[Peer Inp Status]** Displays the status of the consumed peer I/O input connection.	Default: 0 = Off Values: 0 = Off 1 = Waiting 2 = Running 3 = Faulted Type: Read Only

Parameter No.	Name and Description	Details
51 52	**[Peer A Output]** **[Peer B Output]** Selects the source of the peer I/O output data. The adapter transmits this data to the network. **Important:** Changes to these parameters are ignored when **Parameter 53 - [Peer Out Enable]** is set to ‘1’ (On).	Default: 0 = Off Default: 0 = Off Values: 0 = Off 1 = Cmd/Ref 2 = Datalink A Input 3 = Datalink B Input 4 = Datalink C Input 5 = Datalink D Input 6 = Datalink A Output 7 = Datalink B Output 8 = Datalink C Output 9 = Datalink D Output Type: Read/Write Reset Required: No
53	**[Peer Out Enable]** Determines if peer I/O output is on or off.	Default: 0 = Off Values: 0 = Off 1 = On Type: Read/Write Reset Required: No
54	**[Peer Out Time]** Sets the minimum time that an adapter will wait when transmitting data to a peer. **Important:** Changes to these parameters are ignored when **Parameter 53 - [Peer Out Enable]** is set to ‘1’ (On).	Default: 10.00 Seconds Minimum: 0.01 Seconds Maximum: 10.00 Seconds Type: Read/Write Reset Required: No
55	**[Peer Out Skip]** Sets the maximum time that an adapter will wait when transmitting data to a peer. The value of **Parameter 54 - [Peer Out Time]** is multiplied by the value of this parameter to set the time. **Important:** Changes to these parameters are ignored when **Parameter 53 - [Peer Out Enable]** is set to ‘1’ (On).	Default: 1 Minimum: 1 Maximum: 16 Type: Read/Write Reset Required: No
56	**[Web Enable]** Displays the setting of the adapter Web Pages Switch (SW2) when the adapter was last reset.	Default: 0 = Disabled Values: 0 = Disabled 1 = Enabled Type: Read Only
57	**[Web Features]** Sets the access to the Web interface and Web configurable email notification feature.	Default: xxxx xxx0 Bit Values: 0 = Disabled 1 = Enabled Type: Read/Write Reset Required: No

Bit Definition	Not Used	Not Used	Not Used	Not Used	Not Used	Not Used	Not Used	E-mail Cfg
Default	x	x	x	x	x	x	x	1
Bit	7	6	5	4	3	2	1	0

Notes:

EtherNet/IP Objects

This appendix presents information about the EtherNet/IP objects that can be accessed using Explicit Messages. For information on the format of Explicit Messages and example ladder logic programs, refer to Chapter 6, Using Explicit Messaging.

Object	Class Code		Page
	Hex.	Dec.	
Identity Object	0x01	1	182
Assembly Object	0x04	4	183
Register Object	0x07	7	184
Parameter Object	0x0F	15	185
Parameter Group Object	0x10	16	188
Device Level Ring Object	0x47	71	189
Quality of Service Object	0x48	72	190
PCCC Object	0x67	103	190

Object	Class Code		Page
	Hex.	Dec.	
DPI Device Object	0x92	146	196
DPI Parameter Object	0x93	147	198
DPI Fault Object	0x97	151	204
DPI Alarm Object	0x98	152	206
DPI Diagnostic Object	0x99	153	207
DPI Time Object	0x9B	155	209
TCP/IP Interface Object	0xF5	245	211
Ethernet Link Object	0xF6	246	213

TIP See the EtherNet/IP specification for more information about EtherNet/IP objects. Information about the EtherNet/IP specification is available on the ODVA web site (http://www.odva.org).

Supported Data Types

Data Type	Description
BOOL	8-bit value -- low bit is true or false
BOOL[n]	Array of n bits
BYTE	8-bit unsigned integer
CONTAINER	32-bit parameter value - sign extended if necessary
DINT	32-bit signed integer
DWORD	32-bit unsigned integer
INT	16-bit signed integer
LWORD	64-bit unsigned integer
REAL	32-bit floating point
SHORT_STRING	1-byte length indicator + that many characters
SINT	8-bit signed integer
STRING[n]	Array of n characters
STRUCT	Structure name only - no size in addition to elements
TCHAR	8 or 16-bit character
UDINT	32-bit unsigned integer
UINT	16-bit unsigned integer
USINT	8-bit unsigned integer
WORD	16-bit unsigned integer

Identity Object

Class Code

Hexadecimal	Decimal
0x01	1

Services

	Implemented for:		
Service Code	Class	Instance	Service Name
0x05	No	Yes	Reset
0x0E	Yes	Yes	Get_Attribute_Single
0x01	Yes	Yes	Get_Attributes_All

Instances

The number of instances depends on the number of components in the device connected to the adapter. This number of components can be read in Instance 0, Attribute 2.

Instance	Description
0	Class
1	Host
2…15	Peripherals on Ports 1…14

Class Attributes

Attribute ID	Access Rule	Name	Data Type	Description
2	Get	Max Instance	WORD	Total number of instances

Instance Attributes

Attribute ID	Access Rule	Name	Data Type	Description
1	Get	Vendor ID	WORD	1 = Allen-Bradley
2	Get	Device Type	WORD	123
3	Get	Product Code	WORD	Number identifying product name and rating
4	Get	Revision: Major Minor	STRUCT of: BYTE BYTE	 Value varies Value varies
5	Get	Status	WORD	Bit 0 = Owned Bit 8 = Minor recoverable fault Bit 10 = Major recoverable fault
6	Get	Serial Number	DWORD	Unique 32-bit number
7	Get	Product Name	SHORT_STRING	Product name and rating
8	Get	State	USINT	Always returns 3 (Operational)
9	Get	Configuration Consistency Value	UINT	For the Host (Instance #1) the CCV is determined from the Host's NVS Checksum along with 20-COMM-ER's NVS Checksum. For DPI Peripherals (Instances 2-15) the CCV is from the peripheral's NVS Checksum only.

Assembly Object

Class Code

Hexadecimal	Decimal
0x04	4

Services

Service Code	Implemented for: Class	Implemented for: Instance	Service Name
0x0E	Yes	Yes	Get_Attribute_Single
0x10	Yes	Yes	Set_Attribute_Single

Instances

Instance	Description
1	All I/O data being read from the DPI device (read-only)
2	All I/O data written to the DPI device (read/write)
191	Input only
192	Listen only

Class Attributes

Attribute ID	Access Rule	Name	Data Type	Description
1	Get	Revision	WORD	2
2	Get	Max Instance	WORD	2
100	Set	Control Timeout	WORD	Control timeout in seconds

Instance Attributes

Attribute ID	Access Rule	Name	Data Type	Description
1	Get	Number of Members	WORD	1
2	Get	Member List	ARRAY of STRUCT: WORD WORD Packed EPATH	 Size of member data Size of member path Member path
3	Conditional (1)	Data	Array of Bits	Data to be transferred
4	Get	Size	WORD	Size of assembly data in bits

(1) For instance 1, access rule for the data attribute is Get. For instance 2, it is Get/Set.

Important: Setting an assembly object attribute can be done only when the Control Timeout (class attribute 100) has been set to a non-zero value.

Register Object

Class Code

Hexadecimal	Decimal
0x07	7

Services

Service Code	Implemented for:		Service Name
	Class	Instance	
0x0E	Yes	Yes	Get_Attribute_Single
0x10	Yes	Yes	Set_Attribute_Single

Instances

Instance	Description
1	All I/O data being read from the DPI device (read-only)
2	All I/O data written to the DPI device (read/write)
3	Logic Status and Feedback data (read-only)
4	Logic Command and Reference data (read/write)
5	Datalink A (input data from device to scanner) (read only)
6	Datalink A (output data from scanner to device) (read/write)
7	Datalink B (input data from device to scanner) (read only)
8	Datalink B (output data from scanner to device) (read/write)
9	Datalink C (input data from device to scanner) (read only)
10	Datalink C (output data from scanner to device) (read/write)
11	Datalink D (input data from device to scanner) (read only)
12	Datalink D (output data from scanner to device) (read/write)
13	Logic Status and Feedback Data (read-only)
14	Mask (1) (read/write)
15	Logic Status (read-only)
16	Logic Command (read/write)
17	Feedback (read-only)
18	Reference (read/write)

(1) The mask command word is set to the value of the first word of the data where there are ones in the second word of the data. Command = (word 1 and not word 2) or (word 1 and word 2). This only controls specified bits in the Logic Command data to the DPI product and does not change the Reference value.

Class Attributes

Attribute ID	Access Rule	Name	Data Type	Description
100	Set	Control Timeout	WORD	Control timeout in seconds

Instance Attributes

Attribute ID	Access Rule	Name	Data Type	Description
1	Get	Bad Flag	BOOL	If set to 1, then attribute 4 may contain invalid data. 0 = good 1 = bad
2	Get	Direction	BOOL	Direction of data transfer 0 = Producer Register (drive to network) 1 = Consumer Register (network to drive)
3	Get	Size	WORD	Size of register data in bits
4	Conditional (1)	Data	ARRAY of BITS	Data to be transferred

(1) For this attribute, the Access Rule is Get if Direction = 0. The Access Rule is Set if Direction = 1.

Important: Setting a Register object attribute can be done only when the Control Timeout (class attribute 100) has been set to a non-zero value.

Parameter Object

Class Code

Hexadecimal	Decimal
0x0F	15

Services

Service Code	Implemented for:		Service Name
	Class	Instance	
0x01	Yes	Yes	Get_Attributes_All
0x05	Yes	No	Reset
0x0E	Yes	Yes	Get_Attribute_Single
0x10	Yes	Yes	Set_Attribute_Single
0x4B	No	Yes	Get_Enum_String

Instances

The number of instances depends on the number of parameters in the DPI drive. The adapter parameters are appended to the list of drive parameters. The total number of parameters can be read in Instance 0, Attribute 2.

Instance	Description
0	Class Attributes
1	Drive Parameter 1 Attributes
⋮	⋮
n	Last Drive Parameter n Attributes (1)
n + 1	Adapter Parameter 1 Attributes
⋮	⋮
n + m	Last Adapter Parameter m Attributes (2)

(1) n represents the number of parameters in the drive.

(2) m represents the number of parameters in the adapter.

Class Attributes

Attribute ID	Access Rule	Name	Data Type	Description
1	Get	Revision	WORD	1
2	Get	Max Instance	WORD	Number of parameters
8	Get	Parameter Class Descriptor	WORD	0 = False, 1 = True Bit 0 = Supports parameter instances Bit 1 = Supports full attributes Bit 2 = Must do NVS save command Bit 3 = Parameters are stored in NVS
9	Get	Configuration Assembly Instance	WORD	0
10	Set	Native Language	BYTE	0 = English 1 = French 2 = Spanish 3 = Italian 4 = German 5 = Japanese 6 = Portuguese 7 = Mandarin Chinese 8 = Russian 9 = Dutch

Instance Attributes

Attribute ID	Access Rule	Name	Data Type	Description
1	(1)	Parameter Value	(2)	(3)
2	Get	Link Path Size	BYTE	0 = No link specified n = The size of Attribute 3 in bytes
3	Get	Link Path		(4)
4	Get	Descriptor	WORD	0 = False, 1 = True Bit 1 = Supports ENUMs Bit 2 = Supports scaling Bit 3 = Supports scaling links Bit 4 = Read only Bit 5 = Monitor Bit 6 = Extended precision scaling
5	Get	Data Type	BYTE	1 = WORD (16-bit) 2 = UINT (16-bit) 3 = INT (16-bit) 5 = SINT 6 = DINT 8 = USINT 9 = UDINT 11 = REAL 22 = SHORT_STRING 24 = BYTE 25 = DWORD
6	Get	Data Size	BYTE	(3)
7	Get	Parameter Name String	SHORT_STRING	(3)
8	Get	Units String	SHORT_STRING	(3)
9	Get	Help String	SHORT_STRING	Null string
10	Get	Minimum Value	(2)	(3)
11	Get	Maximum Value	(2)	(3)
12	Get	Default Value	(2)	(3)
13	Get	Scaling Multiplier	WORD	(3)
14	Get	Scaling Divisor	WORD	(3)
15	Get	Scaling Base	WORD	(3)
16	Get	Scaling Offset	WORD	(3)
17	Get	Multiplier Link	WORD	(3)
18	Get	Divisor Link	WORD	(3)
19	Get	Base Link	WORD	(3)
20	Get	Offset Link	WORD	(3)
21	Get	Decimal Precision	BYTE	(3)

(1) Access rule is defined in Bit 4 of instance attribute 4 (0 = Get/Set, 1 = Get).

(2) Specified in descriptor, data type, and data size.

(3) Value varies based on parameter instance.

(4) See the EtherNet/IP specification for a description of the link path.

Parameter Group Object

Class Code

Hexadecimal	Decimal
0x10	16

Services

Service Code	Implemented for:		Service Name
	Class	Instance	
0x0E	Yes	Yes	Get_Attribute_Single
0x10	Yes	No	Set_Attribute_Single

Instances

The number of instances depends on the number of groups in the device. A group of adapter parameters is appended to the list of groups in the device. The total number of groups can be read in Instance 0, Attribute 2.

Number	Description
0	Class Attributes
1	Drive Group 1 Attributes
⋮	⋮
n	Last Drive Group Attributes
n + 1	Adapter Group Attributes

Class Attributes

Attribute ID	Access Rule	Name	Data Type	Description
1	Get	Parameter group version	WORD	1
2	Get	Max Instance	WORD	Total number of groups
8	Set	Native Language	BYTE	0 = English 1 = French 2 = Spanish 3 = Italian 4 = German 5 = Japanese 6 = Portuguese 7 = Mandarin Chinese 8 = Russian 9 = Dutch

Instance Attributes

Attribute ID	Access Rule	Name	Data Type	Description
1	Get	Group Name String	SHORT_STRING	Group name
2	Get	Number of Members in Group	WORD	Number of parameters in group
3	Get	1st Parameter Number in Group	WORD	(1)
4	Get	2nd Parameter Number in Group	WORD	(1)
n	Get	⋮	WORD	(1)

(1) Value varies based on group instance.

Device Level Ring Object

Class Code

Hexadecimal	Decimal
0x0047	71

Services

The following common services will be implemented for the DLR Object.

Service Code	Implemented for:		Service Name
	Class	Instance	
0x01	No	Yes	Get_Attributes_All
0x0E	Yes	Yes	Get_Attribute_Single

Instances

Get_Attribute_ALL is implemented for instances and Get_Attribute_Single for both class and instance.

The adapter supports one instance of the TCP/IP Interface object.

Number	Description
0	Class Attributes
1	Object Attributes

Class Attributes

The following class attributes will be supported for the DLR Object:

Attribute ID	Access Rule	Name	Data Type	Description
1	Get	Revision	UNIT	2

Instance Attributes

A single instance (instance 1) will be supported.

Attribute ID	Access Rule	Name	Data Type	Description
1	Get	Network Topology	USINT	0 = Linear 1 = Ring
2	Get	Network Status	USINT	0 = Normal 1 = Ring Fault 2 = Unexpected Loop Detect 3 = Partial Network Fault 4 = Rapid Fault/Restore Cycle
10	Get	Active Supervisor Address	STRUCT of: UDINT Array of 6 USINT	Ring supervisor
12	Get	Capability Flags	DWORD	0x00000002

Quality of Service Object

Class Code

Hexadecimal	Decimal
0x0048	72

Services

Service Code	Implemented for:		Service Name
	Class	Instance	
0x0E	Yes	Yes	Get_Attribute_Single
0x10	No	Yes	Set_Attribute_Single

Instances

Get_Attribute_Single is implemented on both class and instance. Set_Attribute_Single is implemented on instances. Get_Attribute_All is not implemented

The adapter supports one instance of the TCP/IP Interface object.

Number	Description
0	Class Attributes
1	Object Attributes

Class Attributes

Attribute ID	Access Rule	Name	Data Type	Value
1	Get	Revision	UINT	1

Instance Attributes

Attribute ID	Access Rule	Name	Data Type	Description
1	Set	802.1Q Tag Enable	USINT	0 = Disable (default) 1 = Enable
4	Set	DSCP Urgent	USINT	Default = 55
5	Set	DSCP Scheduled	USINT	Default = 47
6	Set	DSCP High	USINT	Default = 43
7	Set	DSCP Low	USINT	Default = 31
8	Set	DSCP Explici	USINT	Default = 27

PCCC Object

Class Code

Hexadecimal	Decimal
0x67	103

Services

Service Code	Implemented for:		Service Name
	Class	Instance	
0x4B	No	Yes	Execute_PCCC
0x4C	No	Yes	Execute_DH+

Instances

Supports Instance 1.

Class Attributes

Not supported.

Instance Attributes

Not supported.

Message Structure for Execute_PCCC

Request		
Name	**Data Type**	**Description**
Length	USINT	Length of requestor ID
Vendor	UINT	Vendor number of requestor
Serial Number	UDINT	ASA serial number of requestor
Other	Product Specific	Identifier of user, task, etc. on the requestor
CMD	USINT	Command byte
STS	USINT	0
TNSW	UINT	Transport word
FNC	USINT	Function code; not used for all CMDs.
PCCC_ params	ARRAY of USINT	CMD/FNC specific parameters

Response		
Name	**Data Type**	**Description**
Length	USINT	Length of requestor ID
Vendor	UINT	Vendor number of requestor
Serial Number	UDINT	ASA serial number of requestor
Other	Product Specific	Identifier of user, task, etc. on the requestor
CMD	USINT	Command byte
STS	USINT	Status byte
TNSW	UINT	Transport word. Same value as the request.
EXT_STS	USINT	Extended status; not used for all CMDs.
PCCC_ results	ARRAY of USINT	CMD/FNC specific result data

Message Structure for Execute_DH+

Request		
Name	**Data Type**	**Description**
DLink	UINT	Destination Link ID
DSta	USINT	Destination Station number
DUser	USINT	Destination “User” number
SLink	UINT	Source Link ID
SSta	USINT	Source Station number
SUser	USINT	Source User number
CMD	USINT	Command byte
STS	USINT	0
TNSW	UINT	Transport word
FNC	USINT	Function code; not used for all CMDs
PCCC_ params	ARRAY of USINT	CMD/FNC specific parameters

Response		
Name	**Data Type**	**Description**
DLink	UINT	Destination Link ID
DSta	USINT	Destination Station number
DUser	USINT	Destination “User” number
SLink	UINT	Source Link ID
SSta	USINT	Source Station number
SUser	USINT	Source User number
CMD	USINT	Command byte
STS	USINT	Status byte
TNSW	UINT	Transport word. Same value as the request.
EXT_STS	USINT	Extended status; not used for all CMDs
PCCC_ results	ARRAY of USINT	CMD/FNC specific result data

The adapter supports the following PCCC command types:

CMD	FNC	Description
0x06	0x03	Identify host and some status
0x0F	0x67	PLC-5 typed write
0x0F	0x68	PLC-5 typed read
0x0F	0x95	Encapsulate other protocol
0x0F	0xA2	SLC 500 protected typed read with 3 address fields
0x0F	0xAA	SLC 500 protected typed write with 3 address fields
0x0F	0xA1	SLC 500 protected typed read with 2 address fields
0x0F	0xA9	SLC 500 protected typed write with 2 address fields
0x0F	0x00	Word range read
0x0F	0x01	Word range write

For more information regarding PCCC commands, see DF1 Protocol and Command Set Manual, publication 1770-6.5.16.

N-Files

N-File	Description			
N40	This N-file lets you use Emulated Block Transfer messages to read and write many types of DPI messages. To use Emulated Block Transfer messages, you send a Write message to N40:0…N40:63, wait until the adapter responds with a reply message, and then read the response data in N40:0…N40:63 with a Read message. For details about Block Transfer messages and the data required for each byte in the N-File, see the Remote I/O Adapter User Manual, publication 20COMM-UM004. Bits 15…8 are the Most Significant Byte. Bits 7…0 are the Least Significant Byte.			
	Write		*Read*	
Bits	15	0	15	0
N40:0	0x00	Length (in Bytes)	0x00	Length (in Bytes)
N40:1	DPI Port	0x81	Status Size	Status Type
N40:2	0x00	CIP Service	Data (length varies based on message)	
N40:3	CIP Class			
N40:4	CIP Instance			
N40:5	CIP Attribute			
N40:6 ⋮ N40:63	Data (length varies based on message)			
N41	This N-file lets you read and write control I/O messages. You can write control I/O messages only when all of the following conditions are true: The adapter is not receiving I/O from a scanner. For example, there is no scanner on the network, the scanner is in idle (program) mode, the scanner is faulted, or the adapter is not mapped to the scanner. The adapter is not receiving peer I/O from another adapter. The value of N42:3 is set to a non-zero value.			
	Write		*Read*	

N-File	Description	
N41:0	Logic Command Word	Logic Status Word
N41:1	Reference (least significant word)	Feedback (least significant word)
N41:2	Reference (most significant word)	Feedback (most significant word)
N41:3	Datalink A1 (least significant word)	Datalink A1 (least significant word)
N41:4	Datalink A1 (most significant word)	Datalink A1 (most significant word)
N41:5	Datalink A2 (least significant word)	Datalink A2 (least significant word)
N41:6	Datalink A2 (most significant word)	Datalink A2 (most significant word)
N41:7	Datalink B1 (least significant word)	Datalink B1 (least significant word)
N41:8	Datalink B1 (most significant word)	Datalink B1 (most significant word)
N41:9	Datalink B2 (least significant word)	Datalink B2 (least significant word)
N41:10	Datalink B2 (most significant word)	Datalink B2 (most significant word)
N41:11	Datalink C1 (least significant word)	Datalink C1 (least significant word)
N41:12	Datalink C1 (most significant word)	Datalink C1 (most significant word)
N41:13	Datalink C2 (least significant word)	Datalink C2 (least significant word)
N41:14	Datalink C2 (most significant word)	Datalink C2 (most significant word)
N41:15	Datalink D1 (least significant word)	Datalink D1 (least significant word)
N41:16	Datalink D1 (most significant word)	Datalink D1 (most significant word)
N41:17	Datalink D2 (least significant word)	Datalink D2 (least significant word)
N41:18	Datalink D2 (most significant word)	Datalink D2 (most significant word)
N42	This N-file lets you read and write some values configuring the port.	
N42:3	Time-out (read/write): Time (in seconds) allowed between messages to the N41 file. If the adapter does not receive a message in the specified time, it performs the fault action configured in its [Comm Flt Action] parameter. A valid setting is between 1 and 32767 seconds (5 . . . 20 seconds is recommended).	
N42:7	Adapter Port Number (read only): DPI port on the drive to which the adapter is connected.	
N42:8	Peer Adapters (read only): Bit field of devices having DPI Peer capabilities.	

N45	This N-file lets you read and write control I/O messages. You can write control I/O messages only when all of the following conditions are true: The adapter is not receiving I/O from a scanner. For example, there is no scanner on the network, the scanner is in idle (program) mode, the scanner is faulted, or the adapter is not mapped to the scanner. The adapter is not receiving peer I/O from another adapter. The value of N42:3 is set to a non-zero value.	
	Write	*Read*
N45:0	Logic Command (least significant)	Logic Status (least significant)
N45:1	Logic Command (most significant)	Logic Status (most significant)
N45:2	Reference (least significant)	Feedback (least significant)
N45:3	Reference (most significant)	Feedback (most significant)
N45:4	DL From Net 01 (least significant)	DL To Net 01 (least significant)
N45:5	DL From Net 01 (most significant)	DL To Net 01 (most significant)
N45:6	DL From Net 02 (least significant)	DL To Net 02 (least significant)
N45:7	DL From Net 02 (most significant)	DL To Net 02 (most significant)
N45:8	DL From Net 03 (least significant)	DL To Net 03 (least significant)
N45:9	DL From Net 03 (most significant)	DL To Net 03 (most significant)
N45:10	DL From Net 04 (least significant)	DL To Net 04 (least significant)
N45:11	DL From Net 04 (most significant)	DL To Net 04 (most significant)
N45:12	DL From Net 05 (least significant)	DL To Net 05 (least significant)
N45:13	DL From Net 05 (most significant)	DL To Net 05 (most significant)
N45:14	DL From Net 06 (least significant)	DL To Net 06 (least significant)
N45:15	DL From Net 06 (most significant)	DL To Net 06 (most significant)
N45:16	DL From Net 07 (least significant)	DL To Net 07 (least significant)
N45:17	DL From Net 07 (most significant)	DL To Net 07 (most significant)
N45:18	DL From Net 08 (least significant)	DL To Net 08 (least significant)
N45:19	DL From Net 08 (most significant)	DL To Net 08 (most significant)
N45:20	DL From Net 09 (least significant)	DL To Net 09 (least significant)
N45:21	DL From Net 09 (most significant)	DL To Net 09 (most significant)
N45:22	DL From Net 10 (least significant)	DL To Net 10 (least significant)
N45:23	DL From Net 10 (most significant)	DL To Net 10 (most significant)
N45:24	DL From Net 11 (least significant)	DL To Net 11 (least significant)
N45:25	DL From Net 11 (most significant)	DL To Net 11 (most significant)
N45:26	DL From Net 12 (least significant)	DL To Net 12 (least significant)
N45:27	DL From Net 12 (most significant)	DL To Net 12 (most significant)
N45:28	DL From Net 13 (least significant)	DL To Net 13 (least significant)
N45:29	DL From Net 13 (most significant)	DL To Net 13 (most significant)
N45:30	DL From Net 14 (least significant)	DL To Net 14 (least significant)
N45:31	DL From Net 14 (most significant)	DL To Net 14 (most significant)
N45:32	DL From Net 15 (least significant)	DL To Net 15 (least significant)
N45:33	DL From Net 15 (most significant)	DL To Net 15 (most significant)
N45:34	DL From Net 16 (least significant)	DL To Net 16 (least significant)
N45:35	DL From Net 16 (most significant)	DL To Net 16 (most significant)

Important: If your controller or HMI platform supports CIP messaging, use the CIP Parameter object to get and set parameters.

N-File	Description
N150…N199	These N-files let you read and write parameter values in DPI Port 0 (the host PowerFlex drive) as 32-bit double words. You can interpret the data in various ways (for example, 32-bit real, 32-bit integer) To read a parameter, you need to send a message with two elements. For example, to read parameter 1, read two elements beginning at N150:2. As another example, to read parameters 2…6, read ten elements beginning at N150:4.
N150:0…1	Number of parameters in the drive
N150:2…249	Drive parameters 1…124
N151:0…249	Drive parameters 125…249
N152:0…249	Drive parameters 250…374
N153:0…249	Drive parameters 375…499
⋮	⋮
N199:0…249	Drive parameters 6125…6249

N-File	Description
N201…N212	These N-files let you read and write values to DPI and Host parameters in Ports 1…14 (for example, a HIM or adapter) as 32-bit double words. You can interpret the data in various ways (for example, 32-bit real, 32-bit integer) To read a parameter, you need to send a message with two elements. For example, to read parameter 1 in the peripheral connected to DPI port 1, read two elements beginning at N201:2. As another example, to read parameters 2…6 in the peripheral connected to DPI port 5 (the adapter), read ten elements beginning at N209:4.
N201:0…1	Number of parameters in the DPI peripheral at DPI port 1
N201:2…249	Parameters 1…124 in the DPI peripheral at DPI port 1
N202:0…249	Parameters 125…249 in the DPI peripheral at DPI port 1
N203:0…1	Number of parameters in the DPI peripheral at DPI port 2
N203:2…249	Parameters 1…124 in the DPI peripheral at DPI port 2
N204:0…249	Parameters 125…249 in the DPI peripheral at DPI port 2
N205:0…1	Number of parameters in the DPI peripheral at DPI port 3
N205:2…249	Parameters 1…124 in the DPI peripheral at DPI port 3
N206:0…249	Parameters 125…249 in the DPI peripheral at DPI port 3
N207:0…1	Number of parameters in the DPI peripheral at DPI port 4
N207:2…249	Parameters 1…124 in the DPI peripheral at DPI port 4
N208:0…249	Parameters 125…249 in the DPI peripheral at DPI port 4
N209:0…1	Number of parameters in the DPI peripheral at DPI port 5
N209:2…249	Parameters 1…124 in the DPI peripheral at DPI port 5
N210:0…249	Parameters 125…249 in the DPI peripheral at DPI port 5
N211:0…1	Number of parameters in the DPI peripheral at DPI port 6
N211:2…249	Parameters 1…124 in the DPI peripheral at DPI port 6
N212:0…249	Parameters 125…249 in the DPI peripheral at DPI port 6
The following N-Files are supported only when the adapter is used with a PowerFlex 750-Series drive.	
N213:0…1	Number of parameters in the DPI peripheral at DPI port 7
N213:2…249	Parameters 1…124 in the DPI peripheral at DPI port 7
N214:0…249	Parameters 125…249 in the DPI peripheral at DPI port 7
N215:0…1	Number of parameters in the DPI peripheral at DPI port 8
N215:2…249	Parameters 1…124 in the DPI peripheral at DPI port 8
N216:0…249	Parameters 125…249 in the DPI peripheral at DPI port 8
N217:0…1	Number of parameters in the DPI peripheral at DPI port 9
N217:2…249	Parameters 1…124 in the DPI peripheral at DPI port 9
N218:0…249	Parameters 125…249 in the DPI peripheral at DPI port 9
N219:0…1	Number of parameters in the DPI peripheral at DPI port 10
N219:2…249	Parameters 1…124 in the DPI peripheral at DPI port 10
N220:0…249	Parameters 125…249 in the DPI peripheral at DPI port 10
N221:0…1	Number of parameters in the DPI peripheral at DPI port 11
N221:2…249	Parameters 1…124 in the DPI peripheral at DPI port 11
N222:0…249	Parameters 125…249 in the DPI peripheral at DPI port 11
N223:0…1	Number of parameters in the DPI peripheral at DPI port 12
N223:2…249	Parameters 1…124 in the DPI peripheral at DPI port 12
N224:0…249	Parameters 125…249 in the DPI peripheral at DPI port 12
N225:0…1	Number of parameters in the DPI peripheral at DPI port 13
N225:2…249	Parameters 1…124 in the DPI peripheral at DPI port 13
N226:0…249	Parameters 125…249 in the DPI peripheral at DPI port 13
N227:0…1	Number of parameters in the DPI peripheral at DPI port 14
N227:2…249	Parameters 1…124 in the DPI peripheral at DPI port 14
N228:0…249	Parameters 125…249 in the DPI peripheral at DPI port 14

DPI Device Object

Class Code

Hexadecimal	Decimal
0x92	146

Services

Service Code	Implemented for:		Service Name
	Class	Instance	
0x0E	Yes	Yes	Get_Attribute_Single
0x10	Yes	Yes	Set_Attribute_Single

Instances

The number of instances depends on the number of components in the device. The total number of components can be read in Instance 0, Class Attribute 4.

Instances (Hex.)	(Dec.)	Device
0x0000…0x3FFF	0…16383	Host
0x4000…0x43FF	16384…17407	Adapter
0x4400…0x47FF	17408…18431	DPI Port 1
0x4800…0x4BFF	18432…19455	DPI Port 2
0x4C00…0x4FFF	19456…20479	DPI Port 3
0x5000…0x53FF	20480…21503	DPI Port 4
0x5400…0x57FF	21504…22527	DPI Port 5
0x5800…0x5BFF	22528…23551	DPI Port 6
0x5C00…0x5FFF (1)	22552…24575	DPI Port 7
0x6000…0x63FF (1)	24576…25599	DPI Port 8
0x6400…0x67FF (1)	25600…26623	DPI Port 9
0x6800…0x6BFF (1)	26624…27647	DPI Port 10
0x6C00…0x6FFF (1)	27648…28671	DPI Port 11
0x7000…0x73FF (1)	28672…29695	DPI Port 12
0x7400…0x77FF (1)	29696…30719	DPI Port 13
0x7800…0x7BFF (1)	30720…31743	DPI Port 14

Example	Description
0	Class Attributes (Drive)
1	Drive Component 1
2	Drive Component 2
⋮	⋮
16384	Class Attributes (Adapter)
16385	Adapter Component 1
⋮	⋮

(1) These instances are supported only when the adapter is used with a PowerFlex 750-Series drive.

Class Attributes

Attribute ID	Access Rule	Name	Data Type	Description
0	Get	Family Code	BYTE	0x00 = DPI Peripheral 0x30 = PowerFlex 70 0x34 = PowerFlex 700H 0x38, 0x39, or 0x3A= PowerFlex 700 0x40 = PowerFlex 7000 0x48, 0x49, or 0x4A = PowerFlex 700S 0x5A = SMC Flex 0x68, 0x69, or 0x6A = PowerFlex 700VC 0x90 = PowerFlex 753/755 0xA0 = 20-750-xxx Option Module 0xFF = HIM
1	Get	Family Text	STRING[16]	Text identifying the device.

Attribute ID	Access Rule	Name	Data Type	Description
2	Set	Language Code	BYTE	0 = English 1 = French 2 = Spanish 3 = Italian 4 = German 5 = Japanese 6 = Portuguese 7 = Mandarin Chinese 8 = Russian 9 = Dutch
3	Get	Product Series	BYTE	1 = A 2 = B . . .
4	Get	Number of Components	BYTE	Number of components (for example, main control board, I/O boards, and so forth) in the device.
5	Set	User Definable Text	STRING[16]	Text identifying the device with a user-supplied name.
6	Get	Status Text	STRING[12]	Text describing the status of the device.
7	Get	Configuration Code	BYTE	Identification of variations.
8	Get	Configuration Text	STRING[16]	Text identifying a variation of a family device.
9	Get	Brand Code	WORD	0x0001 = Allen-Bradley
11	Get	NVS Checksum	WORD	Checksum of the Non-Volatile Storage in a device.
12	Get	Class Revision	WORD	2 = DPI
13	Get	Character Set Code	BYTE	0 = SCANport HIM 1 = ISO 8859-1 (Latin 1) 2 = ISO 8859-2 (Latin 2) 3 = ISO 8859-3 (Latin 3) 4 = ISO 8859-4 (Latin 4) 5 = ISO 8859-5 (Cyrillic) 6 = ISO 8859-6 (Arabic) 7 = ISO 8859-7 (Greek) 8 = ISO 8859-8 (Hebrew) 9 = ISO 8859-9 (Turkish) 10 = ISO 8859-10 (Nordic) 255 = ISO 10646 (Unicode)
14	Get	Product Option Support	BOOL[64]	
15	Get	Languages Supported	STRUCT of: BYTE BYTE[n]	 Number of Languages Language Codes (see Class Attribute 2)
16	Get	Date of Manufacture	STRUCT of: WORD BYTE BYTE	 Year Month Day
17	Get	Product Revision	STRUCT of: BYTE BYTE	 Major Firmware Release Minor Firmware Release
18	Get	Serial Number	DWORD	Value between 0x00000000 and 0xFFFFFFFF
19	Set	Language Selected	BYTE	0 = Default (HIM will prompt at start up) 1 = Language was selected (no prompt)
20	Set	Customer-Generated Firmware	STRING[36]	GUID (Globally Unique Identifier) identifying customer firmware flashed into the device.
30	Get	International Status Text	STRINGN	Text describing the status of device with support for Unicode.
31	Get/Set	International User Definable Text	STRINGN	Text identifying the device with a user-supplied name with support for Unicode.

Attribute ID	Access Rule	Name	Data Type	Description
34	Get	Key Information	STRUCT of: DWORD DWORD WORD WORD WORD BYTE BYTE BYTE BYTE BYTE BYTE[16]	 Rating Code Device Serial Number Customization Code Customization Revision Brand Code Family Code Config Code Language Code Major Revision Minor Revision Customer-Generated Firmware UUID
35	Get	NVS CRC	DWORD	A 32-bit CRC of the Non-Volatile Storage in a device.
39	Get	SI Driver Code	WORD	Code identifying the protocol between the device and host.
128	Get	Customization Code	WORD	Code identifying the customized device.
129	Get	Customization Revision Number	WORD	Revision of the customized device.
130	Get	Customization Device Text	STRING[32]	Text identifying the customized device.

Instance Attributes

Attribute ID	Access Rule	Name	Data Type	Description
3	Get	Component Name	STRING[32]	Name of the component
4	Get	Component Firmware Revision	STRUCT of: BYTE BYTE	 Major Revision Minor Revision
8	Get	Component Serial Number	DWORD	Value between 0x00000000 and 0xFFFFFFFF
9	Get	International Component Name	STRINGN	Name of the component with support for Unicode.

DPI Parameter Object

Class Code

Hexadecimal	Decimal
0x93	147

To access 'Host Config' parameters, use the HOST DPI Parameter Object (Class code 0x9F).

Instances

The number of instances depends on the number of parameters in the device. The total number of parameters can be read in Instance 0, Attribute 0.

Instances (Hex.)	(Dec.)	Device
0x0000…0x3FFF	0…16383	Host
0x4000…0x43FF	16384…17407	Adapter
0x4400…0x47FF	17408…18431	DPI Port 1
0x4800…0x4BFF	18432…19455	DPI Port 2
0x4C00…0x4FFF	19456…20479	DPI Port 3
0x5000…0x53FF	20480…21503	DPI Port 4
0x5400…0x57FF	21504…22527	DPI Port 5
0x5800…0x5BFF	22528…23551	DPI Port 6
0x5C00…0x5FFF (1)	23552…24575	DPI Port 7
0x6000…0x63FF (1)	24576…25599	DPI Port 8
0x6400…0x67FF (1)	25600…26623	DPI Port 9

Example	Description
0	Class Attributes (Drive)
1	Drive Parameter 1 Attributes
2	Drive Parameter 2 Attributes
⋮	⋮
16384	Class Attributes (Adapter)
16385	Adapter Parameter 1 Attributes
⋮	⋮

Instances (Hex.)	(Dec.)	Device
0x6800…0x6BFF (1)	26624…27647	DPI Port 10
0x6C00…0x6FFF (1)	27648…28671	DPI Port 11
0x7000…0x73FF (1)	28672…29695	DPI Port 12
0x7400…0x77FF (1)	29696…30719	DPI Port 13
0x7800…0x7BFF (1)	30720…31743	DPI Port 14

Example	Description

(1) These instances are supported only when the adapter is used with a PowerFlex 750-Series drive.

Class Attributes

Attribute ID	Access Rule	Name	Data Type	Description
0	Get	Number of Instances	WORD	Number of parameters in the device
1	Set	Write Protect Password	WORD	0 = Password disabled n = Password
2	Set	NVS Command Write	BYTE	0 = No Operation 1 = Store values in active memory to NVS 2 = Load values in NVS to active memory 3 = Load default values to active memory
3	Get	NVS Parameter Value Checksum	WORD	Checksum of all parameter values in a user set in NVS
4	Get	NVS Link Value Checksum	WORD	Checksum of parameter links in a user set in NVS
5	Get	First Accessible Parameter	WORD	First parameter available if parameters are protected by passwords. A ‘0’ indicates all parameters are protected.
7	Get	Class Revision	WORD	2 = DPI
8	Get	First Parameter Processing Error	WORD	The first parameter that has been written with a value outside of its range. A ‘0’ indicates no errors.
9	Set	Link Command	BYTE	0 = No Operation 1 = Clear All Parameter Links (This does not clear links to function blocks.)

Instance Attributes

Attribute ID	Access Rule	Name	Data Type	Description
6	Get	DPI Offline Read Full	STRUCT of: BOOL[32] CONTAINER CONTAINER CONTAINER STRING[16] STRING[4] WORD WORD WORD WORD WORD WORD WORD BYTE BYTE WORD WORD CONTAINER WORD WORD WORD INT	 Descriptor Offline minimum value Offline maximum value Offline default value Parameter name Offline parameter units Online minimum parameter instance Online maximum parameter instance Online default parameter instance Multiple parameter instance Divisor parameter instance Base parameter instance Offset parameter instance Formula number Pad byte (always zero) Help instance Pad word (always a value of zero) Parameter value Multiplier Divisor Base Offset
7	Get	DPI Online Read Full	STRUCT of: BOOL[32] CONTAINER(1) CONTAINER CONTAINER CONTAINER WORD WORD STRING[4] WORD WORD WORD INT BYTE[3] BYTE STRING[16]	 Descriptor (see page 202) Parameter value Minimum value Maximum value Default value Next parameter Previous parameter Units (for example, Amp, Hz) Multiplier (2) Divisor (2) Base (2) Offset (2) Link (source of the value) (0 = no link) Always zero (0) Parameter name
8	Get	DPI Descriptor	BOOL[32]	Descriptor (see page 202)
9	Get/Set	DPI Parameter Value	Various	Parameter value in NVS. (3)
10	Get/Set	DPI RAM Parameter Value	Various	Parameter value in temporary memory. Valid only for DPI drives.
11	Get/Set	DPI Link	BYTE[3]	Link (parameter or function block that is the source of the value) (0 = no link)
12	Get	Help Object Instance	WORD	ID for help text for this parameter
13	Get	DPI Read Basic	STRUCT of: BOOL[32] CONTAINER CONTAINER CONTAINER CONTAINER STRING[16] STRING[4]	 Descriptor (see page 202) Parameter value Minimum value Maximum value Default value Parameter name Units (for example, Amp, Hz)
14	Get	DPI Parameter Name	STRING[16]	Parameter name
15	Get	DPI Parameter Alias	STRING[16]	Customer supplied parameter name.
16	Get	Parameter Processing Error	BYTE	0 = No error 1 = Value is less than the minimum 2 = Value is greater than the maximum

Attribute ID	Access Rule	Name	Data Type	Description
18	Get	International DPI Offline Parameter Text	STRUCT of: STRINGN STRINGN	 International parameter name International offline units
19	Get	International DPI Online Parameter Text	STRUCT of: STRINGN STRINGN	 International parameter name International offline units
20	Get	International DPI Online Read Full	STRUCT of: BOOL[32] CONTAINER CONTAINER CONTAINER CONTAINER WORD WORD WORD WORD WORD INT BYTE[3] BYTE BOOL[32] STRINGN STRINGN	 Descriptor Parameter value Online minimum value Online maximum value Online default value Next Previous Multiplier Divisor Base Offset Link Pad word (always zero) Extended descriptor International parameter name International online parameter units
21	Get	DPI Extended Descriptor	DWORD	Extended descriptor (see page 203)
22	Get	International DPI Offline Read Full	STRUCT of: BOOL CONTAINER CONTAINER CONTAINER WORD WORD WORD WORD WORD WORD WORD BYTE BYTE WORD WORD CONTAINER WORD WORD WORD INT BOOL[32] STRINGN STRINGN	 Descriptor Offline minimum value Offline maximum value Offline default value Online minimum parameter instance Online maximum parameter instance Online default parameter instance Multiple parameter instance Divisor parameter instance Base parameter instance Offset parameter instance Formula number Pad byte (always zero) Help instance Pad word (always a value of zero) Parameter value Multiplier Divisor Base Offset Extended DPI descriptor International DPI parameter name International DPI offline parameter units

(1) A CONTAINER is a 32-bit block of data that contains the data type used by a parameter value. If signed, the value is sign extended. Padding is used in the CONTAINER to ensure that it is always 32-bits.

(2) This value is used in the formulas used to convert the parameter value between display units and internal units. See Formulas for Converting on page 204.

(3) Do **not** continually write parameter data to NVS. See the attention on page 105.

Descriptor Attributes

Bit	Name	Description
0	Data Type (Bit 1)	Right bit is least significant bit (0). 000 = BYTE used as an array of Boolean 001 = WORD used as an array of Boolean 010 = BYTE (8-bit integer) 011 = WORD (16-bit integer) 100 = DWORD (32-bit integer) 101 = TCHAR (8-bit (not unicode) or 16-bits (unicode) 110 = REAL (32-bit floating point value) 111 = Use bits 16, 17, 18
1	Data Type (Bit 2)	
2	Data Type (Bit 3)	
3	Sign Type	0 = Unsigned 1 = Signed
4	Hidden	0 = Visible 1 = Hidden
5	Not a Link Sink	0 = Parameter can sink a link 1 = Parameter cannot sink a link
6	Not Recallable	0 = Recallable from NVS 1 = Not Recallable from NVS
7	ENUM	0 = No ENUM text 1 = ENUM text
8	Writable	0 = Read only 1 = Read/write
9	Not Writable When Enabled	0 = Writable when enabled (for example, drive running) 1 = Not writable when enabled
10	Instance	0 = Parameter value is not a Reference to another parameter 1 = Parameter value refers to another parameter
11	Uses Bit ENUM Mask	This parameter instance supports the Bit ENUM Mask attribute. For more information, see the definition of the attribute.
12	Decimal Place (Bit 0)	Number of digits to the right of the decimal point. 0000 = 0 1111 = 15
13	Decimal Place (Bit 1)	
14	Decimal Place (Bit 2)	
15	Decimal Place (Bit 3)	
16	Extended Data Type (Bit 4)	Right bit is least significant bit (16). 000 = Reserved 001 = DWORD used as an array of Boolean 010 = Reserved 011 = Reserved 100 = Reserved 101 = Reserved 110 = Reserved 111 = Reserved
17	Extended Data Type (Bit 5)	
18	Extended Data Type (Bit 6)	
19	Parameter Exists	Used to mark parameters that are not available to network tools.
20	Not Used	Reserved
21	Formula Links	Indicates the Formula Data is derived from other parameters.
22	Access Level (Bit 1)	A 3-bit field used to control access to parameter data.
23	Access Level (Bit 2)	
24	Access Level (Bit 3)	
25	Writable ENUM	ENUM text: 0 = Read Only, 1 = Read/Write
26	Not a Link Source	0 = May be the source end of a link 1 = May not be the source end of a link
27	Enhanced Bit ENUM	Parameter supports enhanced bit ENUMs.
28	Enhanced ENUM	Parameter supports enhanced ENUMs.
29	Uses DPI Limits Object	Parameter uses the DPI LImits Object.
30	Extended Descriptor	Parameter uses Extended Descriptor bits, which can be obtained by reading the DPI Extended Descriptor attribute for this parameter.
31	Always Upload/Download	Parameter shall always be included in uploads and downloads.

Extended Descriptor Attributes

Bit	Name	Description
0	Indirect Mode	0 = Analog (selects entire parameters) 1 = Digital (selects individual bits within parameters)
1	Indirect Type 0	Analog input list (Instance 0xFFFF)
2	Indirect Type 1	Digital input list (Instance 0xFFFE)
3	Indirect Type 2	Feedback list (Instance 0xFFFD)
4	Indirect Type 3	Analog output list (Instance 0xFFFC)
5	Indirect Type 4	Digital output list (Instance 0xFFFB)
6	Indirect Type 5	Undefined (Instance 0xFFFA)
7	Indirect Type 6	Undefined (Instance 0xFFF9)
8	Indirect Type 7	Undefined (Instance 0xFFF8)
9	Indirect Type 8	Undefined (Instance 0xFFF7)
10	Indirect Type 9	Undefined (Instance 0xFFF6)
11	Indirect Type 10	Undefined (Instance 0xFFF5)
12	Indirect Type 11	Undefined (Instance 0xFFF4)
13	Indirect Type 12	Undefined (Instance 0xFFF3)
14	Indirect Type 13	Undefined (Instance 0xFFF2)
15	Indirect Type 14	Parameter-specific list
16	FP Max Decimals Bit 0	These four bits are used on REAL parameters only. They indicate the maximum number of decimal places to be displayed for small values. A value of 0 indicates to not limit the number of decimal places used.
17	FP Max Decimals Bit 1	
18	FP Max Decimals Bit 2	
19	FP Max Decimals Bit 1	
20	Extended Parameter Reference	0 = Not an Extended Parameter Reference 1 = Extended Parameter Reference An Extended Parameter Reference contains a reference to another parameter. The value is formatted the same as an analog mode Indirect Selector parameter (SSpppp, where SS = slot number of device to which this Extended Parameter Reference is pointing, and pppp = number of the parameter or diagnostic item to which this Extended Parameter Reference is pointing). Note that an Extended Parameter Reference can only select parameters unlike an Indirect Selector. An Extended Parameter Reference could be used to configure a Datalink or show the source of a Reference (among other uses).
21	Uses Rating Table Object	This parameter has rating-dependent defaults and limits that can be obtained from the Rating Table Object. The Offline Read Full will include the default value for the smallest rating and limits that will accommodate the full range of values allowed in the family of devices using this particular combination of Family Code and Config Code. The Online Read Full will include the rating-dependent default and limit values for this particular combination of Family Code, Config Code, and Rating Code.
22	Writable Referenced Parameter	This bit must be zero unless the parameter is an Extended Parameter Reference. If the parameter is an Extended Parameter Reference, then: 0 = The referenced parameter may be read-only or writable. 1 = The referenced parameter must always be writable (including while running).
23	Disallow Zero	This bit must be zero unless the parameter is an Indirect Selector or Extended Parameter Reference. If the parameter is an Indirect Selector or Extended Parameter Reference, then: 0 = Allow zero 1 = Disallow zero If this bit is cleared (indicating that a value of zero is allowed), the device must support the 'Zero Text' parameter attribute so that a software tool or HIM can obtain text from the Zero Text parameter attribute. If this bit is set (indicating that a value of zero is disallowed), a software tool or HIM will not allow the user to enter a value of zero.
24	Datalink Out	This bit is used by offline tools and indicates that this is a Datalink Out parameter. Bit 20 must also be set.
25	Datalink In	This bit is used by offline tools and indicates that this is a Datalink In parameter. Bits 20 and 22 must also be set.
26	Not Writable While IO Active	This parameter cannot be written if the I/O data being exchanged between the Host and the peripheral is valid.
27	Command Parameter	This parameter commands the drive to take an action, such as 'Reset Defaults' or 'Autotune', and then returns to a value of zero. Offline software tools will not allow setting this parameter to anything other than a value of zero. If an offline file contains a Command Parameter with a non-zero value, the offline software tool will change the value to zero. Note that command parameters cannot have values that do not return to zero.

Bit	Name	Description
28	Current Value Is Default	This bit identifies a parameter that will not change if a 'Reset Defaults' is commanded. For example, if a drive contains a Language parameter that is set to German, setting defaults will leave the parameter set to German. Likewise, if the parameter is set to French, setting defaults will leave the parameter set to French.
29	Use Zero Text	If the 'Disallow Zero' bit is set, this bit must be cleared. If the 'Disallow Zero' bit is cleared, then: 0 = Use Disabled Text parameter class attribute. 1 = Use Zero Text parameter instance attribute.
30-31	Reserved	Reserved

Formulas for Converting

Display Value = ((Internal Value + Offset) x Multiplier x Base) / (Divisor x $10^{\text{Decimal Places}}$)

Internal Value = ((Display Value x Divisor x $10^{\text{Decimal Places}}$) / (Multiplier x Base)) - Offset

Common Services

Service Code	Implemented for:		Service Name
	Class	Instance	
0x0E	Yes	Yes	Get_Attribute_Single
0x10	Yes	Yes	Set_Attribute_Single

Object Specific Services

Service Code	Implemented for:		Service Name	Allocation Size (in bytes)	
	Class	Instance		Par. Number	Par. Value
0x4B	Yes	No	Get_Attributes_Scattered	2	2
0x4C	Yes	No	Set_Attributes_Scattered	2	2

The table below lists the parameters for the Get_Attributes_Scattered and Set_Attributes_Scattered object-specific service:

Name	Data Type	Description
Parameter Number	DWORD	Parameter to read or write
Parameter Value	DWORD	Parameter value to read or write (zero when reading)

DPI Fault Object

Class Code

Hexadecimal	Decimal
0x97	151

Products such as PowerFlex drives use this object for faults. Adapters use this object for events.

Services

Service Code	Implemented for:		Service Name
	Class	Instance	
0x0E	Yes	Yes	Get_Attribute_Single
0x10	Yes	Yes	Set_Attribute_Single

Instances

The number of instances depends on the maximum number of faults or events supported in the queue. The maximum number of faults/events can be read in Instance 0, Attribute 2.

Instances (Hex.)	(Dec.)	Device
0x0000…0x3FFF	0…16383	Host
0x4000…0x43FF	16384…17407	Adapter
0x4400…0x47FF	17408…18431	DPI Port 1
0x4800…0x4BFF	18432…19455	DPI Port 2
0x4C00…0x4FFF	19456…20479	DPI Port 3
0x5000…0x53FF	20480…21503	DPI Port 4
0x5400…0x57FF	21504…22527	DPI Port 5
0x5800…0x5BFF	22528…23551	DPI Port 6

Example	Description
0	Class Attributes (Drive)
1	Most Recent Drive Fault
2	Second Most Recent Drive Fault
⋮	⋮
16384	Class Attributes (Adapter)
16385	Most Recent Adapter Event
⋮	⋮

Class Attributes

Attribute ID	Access Rule	Name	Data Type	Description
1	Get	Class Revision	WORD	Revision of object
2	Get	Number of Instances	WORD	Maximum number of faults/events that the device can record in its queue
3	Set	Fault Command Write	BYTE	0 = No Operation 1 = Clear Fault/Event 2 = Clear Fault/Event Queue 3 = Reset Device
4	Get	Fault Trip Instance Read	WORD	Fault that tripped the device. For adapters, this value is always 1 when faulted.
5	Get	Fault Data List	STRUCT of: BYTE BYTE WORD[n]	Number of faults/events in the queue. A '0' indicates the fault queue is empty.
6	Get	Number of Recorded Faults	WORD	Number of faults/events in the queue. A '0' indicates the fault queue is empty.
7	Get	Fault Parameter Reference	WORD	Number of faults/events in the queue. A '0' indicates the fault queue is empty.

Instance Attributes

Attribute ID	Access Rule	Name	Data Type	Description
0	Get	Full/All Information	STRUCT of WORD STRUCT of: BYTE BYTE STRING[16] STRUCT of: LWORD BOOL[16] WORD CONTAINER[n]	Fault code Fault source DPI port DPI Device Object Fault text Fault time stamp Timer value (0 = timer not supported) BOOL[0]: (0 = invalid data, 1 = valid data) BOOL[1]: (0 = elapsed time, 1 = real time) BOOL[2…15]: Not used Reserved Reserved
1	Get	Basic Information	STRUCT of WORD STRUCT of: BYTE BYTE STRUCT of: LWORD BOOL[16]	Fault code Fault source DPI port DPI Device Object Fault time stamp Timer value (0 = timer not supported) BOOL[0]: (0 = invalid data, 1 = valid data) BOOL[1]: (0 = elapsed time, 1 = real time) BOOL[2…15]: Not used
2	Get	International Fault Text	STRINGN	Text describing the fault with support for Unicode.

DPI Alarm Object

Class Code

Hexadecimal	Decimal
0x98	152

Products such as PowerFlex drives use this object for alarms or warnings. Adapters do not support this object.

Services

Service Code	Implemented for:		Service Name
	Class	Instance	
0x0E	Yes	Yes	Get_Attribute_Single
0x10	Yes	Yes	Set_Attribute_Single

Instances

The number of instances depends on the maximum number of alarms supported by the queue. The maximum number of alarms can be read in Instance 0, Attribute 2.

Instances (Hex.)	(Dec.)	Device
0x0000…0x3FFF	0…16383	Host

Only host devices can have alarms.

Example	Description
0	Class Attributes (Drive)
1	Most Recent Alarm
2	Second Most Recent Alarm
⋮	⋮

Class Attributes

Attribute ID	Access Rule	Name	Data Type	Description
1	Get	Class Revision	WORD	Revision of object
2	Get	Number of Instances	WORD	Maximum number of alarms that the device can record in its queue
3	Set	Alarm Command Write	BYTE	0 = No Operation 1 = Clear Alarm 2 = Clear Alarm Queue 3 = Reset Device
4	Get	Fault Data List	STRUCT of: BYTE BYTE WORD[n]	Reserved
5	Get	Number of Recorded Alarms	WORD	Number of alarms in the queue. A '0' indicates the alarm queue is empty.

Instance Attributes

Attribute ID	Access Rule	Name	Data Type	Description
0	Get	Full/All Information	STRUCT of WORD STRUCT of: BYTE BYTE STRING[16] STRUCT of: LWORD BOOL[16] WORD CONTAINER[n]	Alarm code Alarm source DPI port DPI Device Object Alarm text Alarm time stamp Timer value (0 = timer not supported) BOOL[0]: (0 = invalid data, 1 = valid data) BOOL[1]: (0 = elapsed time, 1 = real time) BOOL[2…15] Reserved Reserved Reserved
1	Get	Basic Information	STRUCT of WORD STRUCT of: BYTE BYTE STRUCT of: LWORD BOOL[16]	Alarm code Alarm source DPI port DPI Device Object Alarm time stamp Timer value (0 = timer not supported) BOOL[0]: (0 = invalid data, 1 = valid data) BOOL[1]: (0 = elapsed time, 1 = real time) BOOL[2…15] Reserved
2	Get	International Alarm Text	STRINGN	Text describing the alarm with support for Unicode.

DPI Diagnostic Object

Class Code

Hexadecimal	Decimal
0x99	153

Services

Service Code	Implemented for:		Service Name
	Class	Instance	
0x0E	Yes	Yes	Get_Attribute_Single
0x10	Yes	Yes	Set_Attribute_Single

Instances

The number of instances depends on the maximum number of diagnostic items in the device. The total number of diagnostic items can be read in Instance 0, Attribute 2.

Instances (Hex.)	(Dec.)	Device
0x0000…0x3FFF	0…16383	Host
0x4000…0x43FF	16384…17407	Adapter
0x4400…0x47FF	17408…18431	DPI Port 1
0x4800…0x4BFF	18432…19455	DPI Port 2
0x4C00…0x4FFF	19456…20479	DPI Port 3
0x5000…0x53FF	20480…21503	DPI Port 4
0x5400…0x57FF	21504…22527	DPI Port 5
0x5800…0x5BFF	22528…23551	DPI Port 6

Example	Description
0	Class Attributes (Drive)
1	Drive Diagnostic Item 1
2	Drive Diagnostic Item 2
⋮	⋮
16384	Class Attributes (Adapter)
16385	Adapter Diagnostic Item1
⋮	⋮

Class Attributes

Attribute ID	Access Rule	Name	Data Type	Description
1	Get	Class Revision	WORD	1
2	Get	Number of Instances	WORD	Number of diagnostic items in the device.
3	Get	ENUM Offset	WORD	DPI ENUM object instance offset

Instance Attributes

Attribute ID	Access Rule	Name	Data Type	Description
0	Get	Full/All Information	STRUCT of:	
			BOOL[32]	Descriptor (see page 202)
			CONTAINER (1)	Value
			CONTAINER	Minimum value
			CONTAINER	Maximum value
			CONTAINER	Default value
			WORD	Pad Word
			WORD	Pad Word
			STRING[4]	Units (for example, Amp, Hz)
			WORD	Multiplier (2)
			WORD	Divisor (2)
			WORD	Base (2)
			INT	Offset (2)
			DWORD	Link (source of the value) (0 = no link)
			STRING[16]	Diagnostic name text

Attribute ID	Access Rule	Name	Data Type	Description
1	Get/Set	Value	Various	Diagnostic item value
2	Get	International Diagnostic Item Text	STRUCT of: STRINGN STRINGN	 Diagnostic name text Diagnostic units text
3	Get	International Full Read All	STRUCT of: BOOL[32] CONTAINER CONTAINER CONTAINER CONTAINER WORD WORD WORD WORD WORD INT DWORD BOOL[32] STRINGN STRINGN	 Descriptor Value Minimum Maximum Default Pad Word Pad Word Multiplier Divisor Base Offset Pad Extended descriptor Diagnostic name text Diagnostic units text

(1) A CONTAINER is a 32-bit block of data that contains the data type used by a value. If signed, the value is sign extended. Padding is used in the CONTAINER to ensure that it is always 32-bits.

(2) This value is used in the formulas used to convert the value between display units and internal units. See Formulas for Converting on page 204.

DPI Time Object

Class Code

Hexadecimal	Decimal
0x9B	155

Services

Service Code	Implemented for:		Service Name
	Class	Instance	
0x0E	Yes	Yes	Get_Attribute_Single
0x10	Yes	Yes	Set_Attribute_Single

Instances

The number of instances depends on the number of timers in the device. Instance 1 is always reserved for a real-time clock although a device may not support it. The total number of timers can be read in Instance 0, Attribute 2.

Instances (Hex.)	(Dec.)	Device
0x0000…0x3FFF	0…16383	Host
0x4000…0x43FF	16384…17407	Adapter
0x4400…0x47FF	17408…18431	DPI Port 1
0x4800…0x4BFF	18432…19455	DPI Port 2
0x4C00…0x4FFF	19456…20479	DPI Port 3
0x5000…0x53FF	20480…21503	DPI Port 4
0x5400…0x57FF	21504…22527	DPI Port 5
0x5800…0x5BFF	22528…23551	DPI Port 6

Example	Description
0	Class Attributes (Drive)
1	Real Time Clock (Predefined) (not always supported)
2	Timer 1
3	Timer 2
⋮	⋮

Class Attributes

Attribute ID	Access Rule	Name	Data Type	Description
1	Get	Class Revision	WORD	Revision of object
2	Get	Number of Instances	WORD	Number of timers in the object, excluding the real-time clock that is predefined.
3	Get	First Device Specific Timer	WORD	Instance of the first timer that is not predefined.
4	Set	Time Command Write	BYTE	0 = No Operation 1 = Clear all timers (Does not clear the real-time clock or read only timers)
5	Get	Number of Supported Time Zones	WORD	Number of time zones described in the Time Zone List attribute.
6	Get	Time Zone List	STRUCT	Identifies a time zone.
7	Get/Set	Active Time Zone ID	WORD	The ID field of the Time Zone List structure for the desired time zone.
8	Get	Active Time Zone Data	STRUCT of: INT BYTE BYTE BYTE BYTE BYTE BYTE INT BYTE BYTE BYTE BYTE BYTE BYTE	 Standard bias Standard month Standard day of week Standard week Standard hour Standard minute Standard second Daylight offset Daylight month Daylight day of week Daylight week Daylight hour Daylight minute Daylight second
9	Get/Set	Custom Time Zone Data	STRUCT of: INT BYTE BYTE BYTE BYTE BYTE BYTE INT BYTE BYTE BYTE BYTE BYTE BYTE	 Standard bias Standard month Standard day of week Standard week Standard hour Standard minute Standard second Daylight offset Daylight month Daylight day of week Daylight week Daylight hour Daylight minute Daylight second

Instance Attributes

Attribute ID	Access Rule	Name	Data Type	Description
0	Get	Read Full	STRUCT of: STRING[16] LWORD or STRUCT BOOL[16]	 Name of the timer Elapsed time in milliseconds unless timer is a real-time clock (see attribute 2) See attribute 3
1	Get	Timer Text	STRING[16]	Name of the timer
2	Get/Set	Timer Value	LWORD -or- STRUCT of: WORD BYTE BYTE BYTE BYTE BYTE BYTE	Elapsed time in milliseconds unless the timer is a real-time clock. Real-Time Clock Data: Milliseconds (0…999) Seconds (0…59) Minutes (0…59) Hours (0…23) Days (1…31) Months (1 = January, 12 = December) Years (since 1972)
3	Get	Timer Descriptor	BOOL[16]	BOOL[0]: (0 = invalid data, 1 = valid data) BOOL[1]: (0 = elapsed time, 1 = real time) BOOL[2…15]: Not used
4	Get	International Read Full	STRUCT of: STRINGN STRUCT BOOL[16]	 International timer text Timer value Timer descriptor
5	Get	International Timer Text	STRINGN	Name of this timer
6	Get	Clock Status	BOOL[32]	Identifies clock status
8	Get/Set	Number of Leap Seconds	INT	Identifies the current number of Leap Seconds.
9	Get	Clock Options	BOOL[32]	Identifies the optional functionality available in the device's System Clock.
10	Get/Set	Clock Options Enable	BOOL[32]	Identifies which of the clock's options are enabled.

TCP/IP Interface Object

Class Code

Hexadecimal	Decimal
0xF5	245

Services

Service Code	Implemented for:		Service Name
	Class	Instance	
0x0E	Yes	Yes	Get_Attribute_Single
0x10	No	Yes	Set_Attribute_Single

Instances

Get_Attribute_All is supported for instances. The adapter supports one instance of the TCP/IP Interface object.

Number	Description
0	Class Attributes
1	Object Attributes

Class Attributes

Attribute ID	Access Rule	Name	Data Type	Description
1	Get	Revision	WORD	The revision of this object

Instance Attributes

Attribute ID	Access Rule	Name	Data Type	Description
1	Get	Status of TCP/IP Network Interface	DWORD	
2	Get	Configuration Capability	DWORD	0x000000F4
3	Get/Set	Configuration Control	DWORD	0 = Configuration from NVS 2 = Configuration from DHCP
4	Get	Physical Link Object	STRUCT of: UINT Padded EPATH	 2 words 20 F6 24 01 (Enet Link Object instance 1)
5	Get/Set	Interface Configuration	STRUCT of: UDINT UDINT UDINT UDINT UDINT STRING	 IP Address Network Mask Gateway Address Primary DNS Secondary DNS Default Domain Name for not fully qualified host names
6	Get/Set	Host Name	STRING	Host name when using DHCP
8	Get/Set	TTL Value	USINT	Time to Live value for EtherNet/IP multicast packets
9	Get/Set	Multicast Config	Struct of: USINT USINT UINT UDINT	 Allocation Control Reserved Number of multicast addresses to allocate (1-4) Multicast starting address.
10	Get/Set	SelectAcd	BOOL	Activates the use of ACD
11		LastConflictDetected	Struct of: USINT USINT[6] USINT[28]	 AcdActivity RemoteMAC ArpPdu

Ethernet Link Object

Class Code

Hexadecimal	Decimal
0xF6	246

Services

The following common services will be implemented for the Ethernet Link Object.

Service Code	Implemented for:		Service Name
	Class	Instance	
0x0E	Yes	Yes	Get_Attribute_Single
0x10	No	Yes	Set_Attribute_Single
0x4C	No	Yes	Get_and_Clear

Instances

The adapter supports one instance of the TCP/IP Interface object.

Number	Description
0	Class Attributes
1	Object Attributes Ethernet Port 1
2	Object Attributes Ethernet Port 2

Class Attributes

The following class attributes will be supported.

Attribute ID	Access Rule	Name	Data Type	Value
1	Get	Revision	UINT	3
2	Get	Max. Instance	UINT	2
3	Get	Number of Instances	UINT	2

Instance Attributes

Two instances of the Ethernet Link Object will be supported.

Attribute ID	Access Rule	Name	Data Type	Description
1	Get	Interface Speed	UDINT	10 or 100 megabits per second (Mbs)
2	Get	Interface Flags	DWORD	See EtherNet/IP specifications
3	Get	Physical Address	Array of 6 USINTs	MAC address
4	Get	Interface Counters	STRUCT of: UDINT UDINT UDINT UDINT UDINT UDINT UDINT UDINT UDINT UDINT UDINT	 In Octets In Ucast packets In NUcast packets In Discards In Errors In Unknown Protos Out Octets Out Ucast packets Out NUcast packets Out Discards Out Errors

Attribute ID	Access Rule	Name	Data Type	Description
5	Get	Media Counters	STRUCT of: DWORD DWORD DWORD DWORD DWORD DWORD DWORD DWORD DWORD DWORD DWORD DWORD	RX = Received, TX = Transmitted RX frames not having integral number of octets long RX frames not passing FCS check TX frames having one collision TX frames having multiple collisions Number of times of SQE test error message TX Frames delayed first attempt by busy medium Collisions detected later than 512 bit-times in trans. TX frames failing due to excessive collisions TX frames failing due to intern MAC sublayer TX error Times of carrier sense condition loss during trans. RX frames exceeding the maximum frame size RX frames failing due to intern MAC sublayer RX error
6	Get/Set	Interface Control	Struct of: WORD UINT	Struct of: Control Bits Forced Interface Speed
7	Get	Interface Type	USINT	2 = Twisted-pair (e.g., 10Base-T, 100Base-TX, 1000Base-T, etc.)
8	Get	Interface State	USINT	0 = Unknown interface state 1 = The interface is enabled and is ready to send and receive data 2 = The interface is disabled 3 = The interface is testing
9	Get/Set	Admin State	USINT	1 = Enable the interface (default) 2 = Disable the interface.
10	Get	Interface Label	SHORT_STRING	Instance 1: LS 1 Instance 2: LS 2

Logic Command/Status Words

This appendix presents the definitions of the Logic Command and Logic Status words that are used for some products that can be connected to the adapter. If the Logic Command/Logic Status for the product that you are using is not listed, refer to your product's documentation.

PowerFlex 70/70EC, PowerFlex 700/700VC, and PowerFlex 700H Drives

Logic Command Word

Logic Bits																	
15	14	13	12	11	10	9	8	7	6	5	4	3	2	1	0	Command	Description
															x	Stop (1)	0 = Not Stop 1 = Stop
														x		Start (1)(2)	0 = Not Start 1 = Start
													x			Jog	0 = Not Jog (Par. 100) 1 = Jog
												x				Clear Faults	0 = Not Clear Faults 1 = Clear Faults
										x	x					Direction	00 = No Command 01 = Forward Command 10 = Reverse Command 11 = Hold Direction Control
									x							Local Control	0 = No Local Control 1 = Local Control
								x								MOP Increment	0 = Not Increment 1 = Increment
						x	x									Accel Rate	00 = No Command 01 = Accel Rate 1 Command (Par. 140) 10 = Accel Rate 2 Command (Par. 141) 11 = Hold Accel Rate
				x	x											Decel Rate	00 = No Command 01 = Decel Rate 1 Command (Par. 142) 10 = Decel Rate 2 Command (Par. 143) 11 = Hold Decel Rate
	x	x	x													Reference Select (3)	000 = No Command 001 = Ref A Select (Par. 90) 010 = Ref B Select (Par. 93) 011 = Preset 3 (Par. 103) 100 = Preset 4 (Par. 104) 101 = Preset 5 (Par. 105) 110 = Preset 6 (Par. 106) 111 = Preset 7 (Par. 107)
x																MOP Decrement	0 = Not Decrement 1 = Decrement

(1) A '0 = Not Stop' condition (logic 0) must first be present before a '1 = Start' condition will start the drive. The Start command acts as a momentary Start command. A '1' will start the drive, but returning to '0' **will not** stop the drive.

(2) This Start will not function if a digital input (parameters 361…366) is programmed for 2-Wire Control (option 7, 8 or 9).

(3) This Reference Select will not function if a digital input (parameters 361…366) is programmed for 'Speed Sel 1, 2 or 3' (option 15, 16 or 17). Note that Reference Select is 'Exclusive Ownership' – see drive User Manual for more information.

Logic Status Word

Logic Bits																	
15	14	13	12	11	10	9	8	7	6	5	4	3	2	1	0	Status	Description
															x	Ready	0 = Not Ready (Par. 214) 1 = Ready
														x		Active	0 = Not Active (Running) 1 = Active
													x			Command Direction	0 = Reverse 1 = Forward
												x				Actual Direction	0 = Reverse 1 = Forward
											x					Accel	0 = Not Accelerating 1 = Accelerating
										x						Decel	0 = Not Decelerating 1 = Decelerating
									x							Alarm	0 = No Alarm (Par. 211 & 212) 1 = Alarm
								x								Fault	0 = No Fault (Par. 243) 1 = Fault
							x									At Speed	0 = Not At Reference 1 = At Reference
				x	x	x										Local Control (1)	000 = Port 0 (TB) 001 = Port 1 010 = Port 2 011 = Port 3 100 = Port 4 101 = Port 5 110 = Port 6 111 = No Local
x	x	x	x													Reference	0000 = Ref A Auto (Par. 90) 0001 = Ref B Auto (Par. 93) 0010 = Preset 2 Auto 0011 = Preset 3 Auto 0100 = Preset 4 Auto 0101 = Preset 5 Auto 0110 = Preset 6 Auto 0111 = Preset 7 Auto 1000 = Term Blk Manual 1001 = DPI 1 Manual 1010 = DPI 2 Manual 1011 = DPI 3 Manual 1100 = DPI 4 Manual 1101 = DPI 5 Manual 1110 = DPI 6 Manual 1111 = Jog Ref

(1) See 'Owners' in drive User Manual for further information.

PowerFlex 700S Drives

Logic Command Word (Phase II Control)

Logic Bits																Command	Description
15	14	13	12	11	10	9	8	7	6	5	4	3	2	1	0		
															x	Normal Stop	0 = Not Normal Stop 1 = Normal Stop
														x		Start (1)	0 = Not Start 1 = Start
													x			Jog 1	0 = Not Jog using [Jog Speed 1] (Par. 29) 1 = Jog using [Jog Speed 1] (Par. 29)
												x				Clear Fault (2)	0 = Not Clear Fault 1 = Clear Fault
										x	x					Unipolar Direction	00 = No Command 01 = Forward Command 10 = Reverse Command 11 = Hold Direction Control
									x							Reserved	
								x								Jog 2	0 = Not Jog using [Jog Speed 2] (Par. 39) 1 = Jog using [Jog Speed 2] (Par. 39)
							x									Current Limit Stop	0 = Not Current Limit Stop 1 = Current Limit Stop
						x										Coast Stop	0 = Not Coast to Stop 1 = Coast to Stop
					x											Reserved	
				x												Reserved	
			x													Spd Ref Sel0	
		x														Spd Ref Sel1	
	x															Spd Ref Sel2	
x																Reserved	

Bits 14	13	12		
0	0	0	=	Spd Ref A (Par. 27)
0	0	1	=	Spd Ref B (Par. 28)
0	1	0	=	Preset 2 (Par. 15)
0	1	1	=	Preset 3 (Par. 16)
1	0	0	=	Preset 4 (Par. 17)
1	0	1	=	Preset 5 (Par. 18)
1	1	0	=	Preset 6 (Par. 19)
1	1	1	=	Preset 7 (Par. 20)

(1) A Not Stop condition (logic bit 0 = 0, logic bit 8 = 0, and logic bit 9 = 0) must first be present before a 1 = Start condition will start the drive.

(2) To perform this command, the value must switch from '0' to '1'.

Logic Status Word (Phase II Control)

Logic Bits																	
15	14	13	12	11	10	9	8	7	6	5	4	3	2	1	0	**Status**	**Description**
															x	Active	0 = Not Active 1 = Active
														x		Running	0 = Not Running 1 = Running
													x			Command Direction	0 = Reverse 1 = Forward
												x				Actual Direction	0 = Reverse 1 = Forward
											x					Accel	0 = Not Accelerating 1 = Accelerating
										x						Decel	0 = Not Decelerating 1 = Decelerating
									x							Jogging	0 = Not Jogging 1 = Jogging
								x								Fault	0 = No Fault (Par. 323, 324, 325) 1 = Fault
							x									Alarm	0 = No Alarm (Par. 326, 327, 328) 1 = Alarm
						x										Flash Mode	0 = Not in Flash Mode 1 = In Flash Mode
					x											Run Ready	0 = Not Ready to Run (Par. 156) 1 = Ready to Run
				x												At Limit (1)	0 = Not At Limit (Par. 304) 1 = At Limit
			x													Tach Loss Sw	0 = Not Tach Loss Sw 1 = Tach Loss Sw
		x														At Zero Spd	0 = Not At Zero Speed 1 = At Zero Speed
	x															At Setpt Spd	0 = Not At Setpoint Speed 1= At Setpoint Speed
x																Enable	0 = Not Enabled 1 = Enabled

(1) See Parameter 304 - [Limit Status] in the PowerFlex 700S drive User Manual for a description of the limit status conditions.

SMC Flex Controllers
SMC-50 Controllers

Logic Status Word

Bit #																Status	Description
15	14	13	12	11	10	9	8	7	6	5	4	3	2	1	0		
															X	Enabled	1 — Control Power Applied 0 — No Control Power
														X		Running	1 — Power Applied to Motor 0 — Power **not** Applied to Motor
													X			Phasing	1 — ABC Phasing 0 — CBA Phasing
												X				Phasing Active	1 — 3-phase is valid 0 — No valid 3-phase detected
											X					Starting (Accel)	1 — Performing a Start Maneuver 0 — Not Performing a Start Maneuver
										X						Stopping (Decel)	1 — Performing a Stop Maneuver 0 — Not Performing a Stop Maneuver
									X							Alarm	1 — Alarm Present 0 — No Alarm Present
								X								Fault	1 — Fault Condition Exists 0 — No Fault Condition
							X									At Speed	1 — Full Voltage Applied 0 — Not Full Voltage Applied
						X										Start/ Isolation	1 — Start/Isolation Contactor Enabled 0 — Start/Isolation Contactor Disabled
					X											Bypass	1 — External Bypass Contactor Enabled 0 — External Bypass Contactor Disabled
				X												Ready	1 — Ready 0 — Not Ready
			X													Option 1 Input	1 — Input Active 0 — Input Inactive
		X														Option 2 Input	1 — Input Active 0 — Input Inactive
—																—	Bits 14 and 15 — Not Used

Logic Command Word (Control)

Bit #																Status	Description
15	14	13	12	11	10	9	8	7	6	5	4	3	2	1	0		
															X	Stop	1 — Stop/Inhibit 0 — No Action
														X		Start	1 — Start 0 — No Action
													X			Option #1 Input	1 — Stop Maneuver/Inhibit 0 — No Action
												X				Clear Faults	1 — Clear Faults 0 — No Action
											X					Option #2 Input	1 — Perform Option 2 function 0 — No Action
—																—	Bits 5…10 — Not Used
				X												Aux Enable	1 — Use Aux 1…Aux 4 0 — Ignore Aux 1…Aux 4
			X													Aux 1	1 — Aux 1 Active 0 — Aux 1 Inactive
		X														Aux 2	1 — Aux 2 Active 0 — Aux 2 Inactive
	X															Aux 3	1 — Aux 3 Active 0 — Aux 3 Inactive
X																Aux 4	1 — Aux 4 Active 0 — Aux 4 Inactive

A

Adapter

Devices such as drives, controllers, and computers usually require a network communication adapter to provide a communication interface between them and a network such as EtherNet/IP. An adapter reads data on the network and transmits it to the connected device. It also reads data in the device and transmits it to the network.

The 20-COMM-ER EtherNet/IP adapter connects PowerFlex 7-Class drives and SMC controllers to an EtherNet/IP network. Adapters are sometimes also called 'cards', 'embedded communication options', 'gateways', 'modules', or 'peripherals'.

B

BOOTP (Bootstrap Protocol)

BOOTP lets the adapter configure itself dynamically at restart if the network has a BOOTP server. The BOOTP server assigns the adapter a preconfigured IP address, a subnet mask, and a gateway address; therefore, you do not have to configure these with the parameters in the adapter. BOOTP can make it easier to administer an Ethernet network. A **free version** of the Rockwell Software® BOOTP Server can be obtained at http://www.software.rockwell.com/support/download/detail.cfm?ID=3390.

Bridge

A network device that can route messages from one network to another. A bridge also refers to a communications module in a ControlLogix controller that connects the controller to a network. See also Scanner.

C

CIP (Common Industrial Protocol)

CIP is the transport and application layer protocol used for messaging over EtherNet/IP, ControlNet, and DeviceNet networks. The protocol is used for implicit messaging (real-time I/O) and explicit messaging (configuration, data collection, and diagnostics).

Connected Components Workbench Software

The recommended tool for monitoring and configuring Allen-Bradley products and network communication adapters. It can be used on computers running various Microsoft Windows operating systems. You can obtain a **free copy** of Connect Components Workbench software at http://www.ab.com/support/abdrives/webupdate/software.html.

ControlFLASH

A **free** software tool used to electronically update firmware of Allen-Bradley products and network communication adapters. ControlFLASH software is downloaded automatically when the firmware revision file for the product being

updated is downloaded from the Allen-Bradley updates website to your computer.

Controller

A controller, also called programmable logic controller, is a solid-state control system that has a user-programmable memory for storage of instructions to implement specific functions such as I/O control, logic, timing, counting, report generation, communication, arithmetic, and data file manipulation. A controller consists of a central processor, input/output interface, and memory. See also Scanner.

D

Data Rate

The speed at which data is transferred on the EtherNet/IP network. You can set the adapter to a data rate of 10 Mbps Full-Duplex, 10 Mbps Half-Duplex, 100 Mbps Full-Duplex, or 100 Mbps Half-Duplex. If another device on the network sets or auto-negotiates the data rate, you can set the adapter to automatically detect the data rate.

Datalinks

A Datalink is a type of pointer used by PowerFlex 7-Class drives and SMC controllers to transfer data to and from the controller. Datalinks allow specified parameters to be read or written to without using explicit messages. When enabled, each Datalink consumes either four bytes or eight bytes in both the input and output image table of the controller. The drive determines the size of Datalinks.

Device Level Ring (DLR)

A protocol that allows multiported EtherNet device to be connected in a ring topology, enabling broken ring connection detection and network reconfirmation to linear topology.

DLR Announce Frame

Data frame sent by the ring supervisor in a ring network to announce transition from linear to ring or ring to linear configuration.

DLR Beacon Frame

Data frame sent by the ring supervisor in a ring network used to lost connections that break the ring.

DLR Ring Supervisor

A node that sends beacon and announce frames on a ring network to monitor and maintain connectivity by re-configuring the ring while nodes are disconnected or reconnected.

DPI (Drive Peripheral Interface)

A second generation peripheral communication interface used by various Allen-Bradley drives and power products, such as PowerFlex 7-Class drives and SMC controllers. It is a functional enhancement to SCANport.

DPI Peripheral

A device that provides an interface between DPI and a network or user. Peripheral devices are also referred to as 'adapters' or 'modules'. The 20-COMM-ER adapter, 1203-USB or 1203-SSS converter, and PowerFlex 7-Class HIMs (20-HIM-xxx) are examples of DPI peripherals.

DPI Product

A device that uses the DPI communications interface to communicate with one or more peripheral devices. For example, a motor drive such as a PowerFlex 7-Class drive is a DPI product. In this manual, a DPI product is also referred to as 'drive' or 'host'.

DriveExplorer Software

A tool for monitoring and configuring Allen-Bradley products and network communication adapters. It can be used on computers running various Microsoft Windows operating systems. DriveExplorer software, version 3.xx or later, can be used to configure this adapter and PowerFlex drives. This software tool has been discontinued and is now available as **freeware** at http://www.ab.com/support/abdrives/webupdate/software.html. There are no plans to provide future updates to this tool and the download is being provided 'as-is' for users that lost their DriveExplorer CD, or need to configure legacy products not supported by Connected Components Workbench software.

DriveTools SP Software

A software suite designed for running on various Microsoft Windows operating systems. This software suite provides a family of tools, including DriveExecutive software (version 3.01 or later), that you can use to program, monitor, control, troubleshoot, and maintain Allen-Bradley products. DriveTools SP software can be used with PowerFlex 7-Class and PowerFlex 4-Class drives, and legacy drives that implement the SCANport communication interface. Information about DriveTools SP software can be accessed at http://www.ab.com/drives/drivetools.

Duplex

Duplex describes the mode of communication. 'Full-duplex' communication lets a device exchange data in both directions at the same time. 'Half-duplex' communication lets a device exchange data only in one direction at a time. The duplex used by the adapter depends on the type of duplex that other network devices, such as switches, support.

E

EDS (Electronic Data Sheet) Files

Simple text files that are used by network configuration tools to describe products so that you can easily commission them on a network. EDS files describe a product device type and revision. EDS files for many Allen-Bradley products can be found at http://www.ab.com/networks/eds.

EtherNet/IP Network

EtherNet/IP (Industrial Protocol) is an open producer-consumer communication network based on the Ethernet standard (IEEE 802.3), TCP/IP, UDP/IP, and CIP. Designed for industrial communication, both I/O and explicit messages can be transmitted over the network. Each device is assigned a unique IP address and transmits data on the network. The number of devices that an EtherNet/IP network can support depends on the class of IP address. For example, a network with a Class C IP address can have 254 nodes.

General information about EtherNet/IP and the EtherNet/IP specification are maintained by the Open DeviceNet Vendor's Association (ODVA). ODVA is online at http://www.odva.org.

Explicit Messaging

Explicit Messages are used to transfer data that does not require continuous updates. They are typically used to configure, monitor, and diagnose devices over the network.

F

Fault Action

A fault action determines how the adapter and connected drive act when a communication fault (for example, a disconnected cable) occurs or when the controller is switched out of run mode. The former uses a communication fault action, and the latter uses an idle fault action.

Fault Configuration

When communication is disrupted (for example, a cable is disconnected), the adapter and PowerFlex drive can respond with a user-defined fault configuration. The user sets the data that is sent to the drive using specific fault configuration parameters in the adapter. When a fault action parameter is set to use the fault

configuration data and a fault occurs, the data from these parameters is sent as the Logic Command, Reference, and/or Datalinks.

G

Gateway

A device on a network that connects an individual network to a system of networks. When a node needs to communicate with a node on another network, a gateway transfers the data between the two networks. You need to configure the address for the gateway device in the adapter if you want the adapter to communicate with devices that are not on its network.

H

Hardware Address

Each Ethernet device has a unique hardware address (sometimes called a MAC address) that is 48 bits. The address appears as six digits separated by colons (for example, xx:xx:xx:xx:xx:xx). Each digit has a value between 0 and 255 (0x00 and 0xFF). This address is assigned in the hardware and cannot be changed. It is required to identify the device if you are using a BOOTP server.

HIM (Human Interface Module)

A device that can be used to configure and control a drive. PowerFlex 7-Class HIMs (catalog number 20-HIM-xx) can be used to configure PowerFlex 7-Class drives and their connected peripherals.

Hold Last

When communication is disrupted (for example, a cable is disconnected), the adapter and PowerFlex drive can respond by holding last. Hold last results in the drive receiving the last data received via the network connection before the disruption. If the drive was running and using the Reference from the adapter, it will continue to run at the same Reference.

I

Idle Action

An idle action determines how the adapter and connected drive act when the controller is switched out of run mode.

I/O Data

I/O data, sometimes called ‘implicit messages’ or ‘input/output’, is time-critical data such as a Logic Command and Reference. The terms ‘input’ and ‘output’ are defined from the controller’s point of view. Output is produced by the controller and consumed by the adapter. Input is produced by the adapter and consumed by the controller.

IP Addresses

A unique IP address identifies each node on an EtherNet/IP network. An IP address consists of 32 bits that are divided into four segments of one byte each. It appears as four decimal integers separated by periods (xxx.xxx.xxx.xxx). Each 'xxx' can have a decimal value from 0 to 255. For example, an IP address could be 192.168.0.1.

An IP address has two parts: a network ID and a host ID. The class of network determines the format of the address.

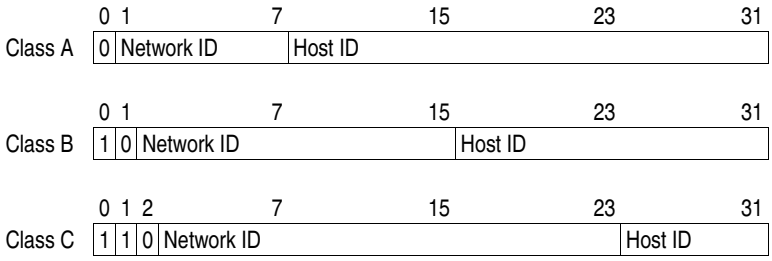

The number of devices on your EtherNet/IP network will vary depending on the number of bytes that are used for the network address. In many cases you are given a network with a Class C address, in which the first three bytes contain the network address (subnet mask = 255.255.255.0). This leaves 8 bits or 256 addresses on your network. Because two addresses are reserved for special uses (0 is an address for the network usually used by the router, and 255 is an address for broadcast messages to all network devices), you have 254 addresses to use on a Class C address block.

To ensure that each device on the Internet has a unique address, contact your network administrator or Internet Service Provider for unique fixed IP addresses. You can then set the unique IP address for the adapter by using a BOOTP server or by manually configuring parameters in the adapter. The adapter reads the values of these parameters only at powerup.

L

Logic Command/Logic Status

The Logic Command is used to control the PowerFlex 7-Class drive (for example, start, stop, and direction). It consists of one 16-bit word of output to the adapter from the network. The definitions of the bits in this word depend on the drive, and are shown in Appendix D.

The Logic Status is used to monitor the PowerFlex 7-Class drive (for example, operating state and motor direction). It consists of one 16-bit word of input from the adapter to the network. The definitions of the bits in this word depend on the drive, and are shown in Appendix D.

M

Master-Slave Hierarchy

An adapter configured for a master-slave hierarchy exchanges data with the master device. Usually, a network has one scanner which is the master device, and all other devices (for example, drives connected to EtherNet/IP adapters) are slave devices.

On a network with multiple scanners (called a multimaster hierarchy), each slave device must have a scanner specified as a master.

N

NVS (Nonvolatile Storage)

NVS is the permanent memory of a device. Devices such as the adapter and drive store parameters and other information in NVS so that they are not lost when the device loses power. NVS is sometimes called 'EEPROM'.

P

PCCC (Programmable Controller Communications Command)

PCCC is the protocol used by some controllers to communicate with devices on a network. Some software products (for example, DriveExplorer and DriveExecutive software) also use PCCC to communicate.

Peer-to-Peer Hierarchy

An adapter that is configured for a peer-to-peer hierarchy can exchange data with a device on the network that is not a scanner. This type of hierarchy can be set up so that a scanner configures or transmits data to one PowerFlex 7-Class drive which then sends the same configuration or data to other PowerFlex 7-Class drives on the network. To use a peer-to-peer hierarchy, you configure one adapter to transmit data (2 or 4 words) and one or more adapters to receive the data.

Ping

A message that is sent by a DPI product to its peripheral devices. They use the ping to gather data about the product, including whether it can receive messages and whether they can log in for control. On EtherNet/IP, a ping can be used to determine if a node exists.

PowerFlex 7-Class (Architecture Class) Drives

The Allen-Bradley PowerFlex 7-Class family of drives supports DPI and, at the time of publication, includes the PowerFlex 70, PowerFlex 700, PowerFlex 700H, PowerFlex 700S, PowerFlex 700L, and PowerFlex 7000 drives.

R

Reference/Feedback

The Reference is used to send a setpoint (for example, speed, frequency, and torque) to the drive. It consists of one word of output to the adapter from the

network. The size of the word (either a 16-bit word or 32-bit word) is determined by the drive.

Feedback is used to monitor the speed of the drive. It consists of one word of input from the adapter to the network. The size of the word (either a 16-bit word or 32-bit word) is determined by the drive.

RSLogix 5/500/5000 Software

RSLogix software is a tool for configuring and monitoring controllers to communicate with connected devices. It is a 32-bit application that runs on various Windows operating systems. Information about RSLogix software can be found at http://www.software.rockwell.com/rslogix.

S

Scanner

A scanner is a separate module (of a multi-module controller) or a built-in component (of a single-module controller) that provides communication with adapters connected to a network. See also Controller.

Status Indicators

LEDs that are used to report the status of the adapter, network, and drive. They are on the adapter and can be viewed on the front cover of the drive when the drive is powered.

Subnet Mask

An extension to the IP addressing scheme that lets you use a single network ID for multiple physical networks. A bit mask identifies the part of the address that specifies the network and the part of the address that specifies the unique node on the network. A ‘1’ in the subnet mask indicates the bit is used to specify the network. A ‘0’ in the subnet mask indicates that the bit is used to specify the node.

For example, a subnet mask on a network may appear as follows: 11111111 11111111 11111111 11000000 (255.255.255.192). This mask indicates that 26 bits are used to identify the network and 6 bits are used to identify devices on each network. Instead of a single physical Class C network with 254 devices, this subnet mask divides it into four networks with up to 62 devices each.

Switches

Network devices that provide virtual connections that help to control collisions and reduce traffic on the network. They are able to reduce network congestion by transmitting packets to an individual port only if they are destined for the connected device. In a control application, in which real time data access is critical, network switches may be required in place of hubs.

T

TCP (Transmission Control Protocol)

EtherNet/IP uses this protocol to transfer Explicit Messaging packets using IP. TCP guarantees delivery of data through the use of retries.

U

UDP (User Datagram Protocol)

EtherNet/IP uses this protocol to transfer I/O packets using IP. UDP provides a simple, but fast capability to send I/O messaging packets between devices. This protocol verifies that adapters transmit the most recent data because it does not use acknowledgements or retries.

UDDT (User-Defined Data Type)

A structure data type that you define during the development of an application (for example, to convert 32-bit REAL parameter data for written and read values to correctly display them in human readable format).

Update

The process of updating firmware in a device. The adapter and its connected PowerFlex 7-Class host drive and its peripherals can be updated using various Allen-Bradley software tools. See Updating the Adapter Firmware on page 44 for more information.

Z

Zero Data

When communication is disrupted (for example, a cable is disconnected), the adapter and drive can respond with zero data. Zero data results in the drive receiving zero as values for Logic Command, Reference, and Datalink data. If the drive was running and using the Reference from the adapter, it will stay running but at zero Reference.

A

adapter
- applying power **24**
- commissioning **26**
- compatible products **13**
- components **11**
- configuration tools **27**
- connecting to the drive **20**
- connecting to the network **23**
- definition **221**
- features **12**
- firmware updating **44**
- grounding **22**
- hardware address label **29**
- installation **17–26**
- IP address **29**, **32**
- mounting on the drive **22**
- parameters **171–179**
- resetting **43**
- specifications **169**
- using in a DPI External Comms Kit **167**
- viewing its status **44**
- web pages **153**–??

applying power to the adapter **24**

Assembly object **183**

attentions **15**

B

baud rate, *see data rate*

bit definitions of Logic Command/Status word for
- PowerFlex 70/700/700H drives **215**
- PowerFlex 700S drives **217**

BOOTP (Bootstrap Protocol)
- definition **221**
- disabling **32**
- free server application **221**
- using **29**

BOOTP parameter **171**

bridge **221**

C

cable, Ethernet **23**

cables
- DPI Internal Interface **20**, **21**

CIP (Common Industrial Protocol) **221**

classes of IP addresses **226**

Comm Flt Action parameter **174**

commissioning the adapter **26**

communications module, *see adapter*

compatible products **13**

components of the adapter **11**

configuration tools **27**

Connected Components Workbench software
- adapter configuration tool **14**, **27**
- definition/website **221**

connecting adapter to the
- drive **20**
- network **23**

ControlFLASH **221**

controller **222**

ControlLogix controller
- configuring the I/O **48**
- explicit messaging **108**
- using the I/O **88**

D

data rate
- definition **222**
- setting **34**

Datalink Size parameter **173**

Datalinks
- definition **222**
- in I/O image **80**
- using **86**

device-level ring (DLR)
- network example **23**

diagnostic items **146**

dimensions **170**

DPI
- connector on adapter **11**
- data rates **169**
- definition **223**
- Internal Interface cable **20**, **21**
- peripheral **223**
- products **13**, **223**

DPI Alarm object **206**

DPI Data Rate parameter **171**

DPI Device object **196**

DPI Diagnostic object **207**

DPI External Comms Kit - using adapter in **167**

DPI Fault object **204**

DPI I/O Act parameter **175**
DPI I/O Cfg parameter **174**
DPI Parameter object **198**
DPI Port parameter **171**
DPI Time object **209**
DriveExecutive software
  adapter configuration tool **14**, **27**
  definition/website **223**
DriveExplorer software
  adapter configuration tool **14**, **27**
  definition/website **223**
  free lite version **223**
drives, *see PowerFlex drives*
DriveTools SP software **223**
duplex communication mode
  definition **224**
  selecting **34**

E

EDS (Electronic Data Sheet) files **224**
EEPROM, *see Nonvolatile Storage (NVS)*
EMC Conformance **17**
EN Rate Act parameter **173**
EN Rate Cfg parameter **172**, **173**
environmental specifications **170**
equipment required **13**
Ethernet
  cable **23**
  connector on adapter **11**
Ethernet Link object **189**, **190**, **213**
EtherNet/IP
  data rates **169**
  example network for
    ControlLogix controller **48**
    MicroLogix 1100 controller **68**
  network definition **224**
  objects - list of **181**–??
  specification **224**
events
  clearing/viewing **149**
  list of **150**
explicit messaging
  about **106**
  configuring for
    ControlLogix controller **108**
    MicroLogix 1100/1400 controller **124**
  definition **224**
  performing **106**

F

fault action
  configuring the adapter for **41**
  definition **224**
fault configuration
  configuring the adapter for **42**
  definition **224**
faults, *see events*
features **12**
firmware revision **7**
firmware update
  definition **229**
  guidelines **44**
Flt Cfg A1-D2 In parameters **176**
Flt Cfg Logic parameter **175**
Flt Cfg Ref parameter **175**
full duplex, *see duplex*

G

gateway **225**
gateway address
  setting with BOOTP **29**
  setting with parameters **32**
Gateway Cfg 1-4 parameters **172**
grounding the adapter **22**

H

half duplex, *see duplex*
hardware address
  definition **225**
  in diagnostic item **148**
  on label **29**
HIM (Human Interface Module)
  accessing parameters with **28**
  definition **225**
  LCD model **28**
  LED model **28**

hold last
configuring the adapter for **41**
definition **225**
host IDs **226**

I

I/O
about **79**
configuring for
ControlLogix controller **48**
MicroLogix 1100/1400 controller **68**
configuring the adapter for **35**
definition **225**
understanding the I/O image **80**
using with
ControlLogix controller **88**
MicroLogix 1100/1400 controller **96**
PLC-5 controller **96**
SLC 500 controller **96**
Identity object **182**
idle action **225**
Idle Flt Action parameter **174**
installation
applying power to the adapter **24**
commissioning the adapter **26**
connecting to the drive **20**
connecting to the network **23**
preparing for **18**
Internal Interface cables
connecting to the adapter **21**
connecting to the drive **21**
illustration **21**
IP Addr Cfg 1-4 parameters **172**
IP address
definition/classes **226**
setting with BOOTP **29**
setting with parameters **32**

L

LCD HIM **28**
LED HIM **28**
LEDs, *see status indicators*
Link status indicator
troubleshooting with **145**
Logic Command/Status
bit definitions for
PowerFlex 70/700/700H drives **215**
PowerFlex 700S drives **217**
definition **226**
in I/O image for
ControlLogix controller **80**
PLC-5, SLC 500 or MicroLogix 1100 controllers **82**
using **84**

M

MAC address, *see hardware address*
manual
conventions **7**
related documentation **8**
website **8**
Master-Slave hierarchy
configuring adapter for **36**
definition **227**
mechanical dimensions **170**
messages, *see explicit messaging or I/O*
MicroLogix 1100/1400 controller
configuring the I/O **68**
explicit messaging **124**
limitations when using the I/O **68**
using the I/O **96**
mounting the adapter **22**
M-S Input parameter **176**
M-S Input parameter configurations **36**
M-S Output parameter **176**
M-S Output parameter configurations **36**

N

NET A status indicator
troubleshooting with **145**
NET B status indicator
locating **144**
network cable **23**
network IDs **226**
Network status indicator
troubleshooting with **145**
Non-Volatile Storage (NVS)
in adapter **27**
in drive **86**

Nonvolatile Storage (NVS)
definition **227**

O

objects - list of **181**–??
ODVA EtherNet/IP specification **224**

P

Parameter Group object **188**
Parameter object **185**
parameters
accessing **27**
convention **7**
list of **171**–**179**
numbering scheme **171**
restoring to factory-default settings **43**
PCCC (Programmable Controller Communications Command) **227**
PCCC object **190**
Peer A Input parameter **177**
Peer A Output parameter **179**
Peer B Input parameter **177**
Peer B Output parameter **179**
Peer Cmd Mask parameter **177**
Peer Flt Action parameter **177**
Peer Inp Addr 1-4 parameters **178**
Peer Inp Enable parameter **178**
Peer Inp Status parameter **178**
Peer Inp Timeout parameter **178**
Peer Out Enable parameter **179**
Peer Out Skip parameter **179**
Peer Out Time parameter **179**
Peer-to-Peer hierarchy
configuring adapter
to receive data **38**
to transmit data **37**
definition **227**
ping **227**
PLC-5 controller
limitations when using the I/O **68**
using the I/O **96**
PORT status indicator
locating **144**
troubleshooting with **144**
power consumption **169**
PowerFlex drives
compatible with adapter **13**
definition **227**
HIM **28**
installing adapter on **20**
preparing for an installation **18**
processor, *see controller*
programmable logic controller, *see controller*

Q

quick start **16**

R

Ref Adjust parameter **176**
Ref/Fdbk Size parameter **173**
Reference/Feedback
definition **227**
in I/O image for
ControlLogix controller **80**
PLC-5, SLC 500 or MicroLogix 1100 controllers **82**
setting an adjustment **41**
using **84**
Register object **184**
regulatory compliance **170**
related documentation **8**
requested packet interval **55**, **65**
Reset Module parameter **173**
ribbon cable, *see Internal Interface cable*
RSLinx Classic software
documentation **9**
using **47**
RSLogix 5/500/5000 software **228**

S

safety precautions **15**
scanner **228**
SLC 500 controller
limitations when using the I/O **68**
using the I/O **96**
specifications
adapter **169**
EtherNet/IP address **224**
EtherNet/IP subnet mask **228**

status indicators
definition **228**
Link **145**
NET A **145**
NET B **144**
Network **145**
normal operation **24**
PORT **144**
troubleshooting with **144**–??, **145**–??, **145**–??
understanding **143**
Subnet Cfg 1-4 parameters **172**
subnet mask
definition **228**
setting with BOOTP **29**
setting with parameters **32**
switches **228**

T

TCP (Transmission Control Protocol) **229**
TCP/IP Interface object **211**
technical support **8**
tools required **13**
troubleshooting **143**–**151**

U

UDDT (User-Defined Data Type) **229**
UDP (User Datagram Protocol) **229**

W

Web Enable parameter **179**
Web Features parameter **179**
web pages
enabling with parameter **42**
for the adapter **153**–??
website
BOOTP utility **221**
DriveExecutive software **223**
DriveExplorer software **223**
DriveTools SP software **223**
EDS files **224**
EtherNet/IP **224**
manuals **8**
ODVA (Open DeviceNet Vendor's Association) **224**
RSLogix 5/500/5000 software **228**
wiring, *see cable, Ethernet*

Z

zero data
configuring the adapter for **41**
definition **229**

U.S. Allen-Bradley Drives Technical Support - Tel: (1) 262.512.8176, Fax: (1) 262.512.2222, Email: support@drives.ra.rockwell.com, Online: www.ab.com/support/abdrives

www.rockwellautomation.com

Power, Control and Information Solutions Headquarters

Americas: Rockwell Automation, 1201 South Second Street, Milwaukee, WI 53204-2496 USA, Tel: (1) 414.382.2000, Fax: (1) 414.382.4444
Europe/Middle East/Africa: Rockwell Automation, Pegasus Park, De Kleetlaan 12a, 1831 Diegem, Belgium, Tel: (32) 2 663 0600, Fax: (32) 2 663 0640
Asia Pacific: Rockwell Automation, Level 14, Core F, Cyberport 3, 100 Cyberport Road, Hong Kong, Tel: (852) 2887 4788, Fax: (852) 2508 1846

Publication 20COMM-UM015B-EN-P - July 2013
Supercedes publication 20COMM-UM015A-EN-P — June 2013

Copyright © 2013 Rockwell Automation, Inc. All rights reserved. Printed in USA.

Series
A1F

Low Cost OEM Pressure Switch

Field Installable Weatherproof Enclosure

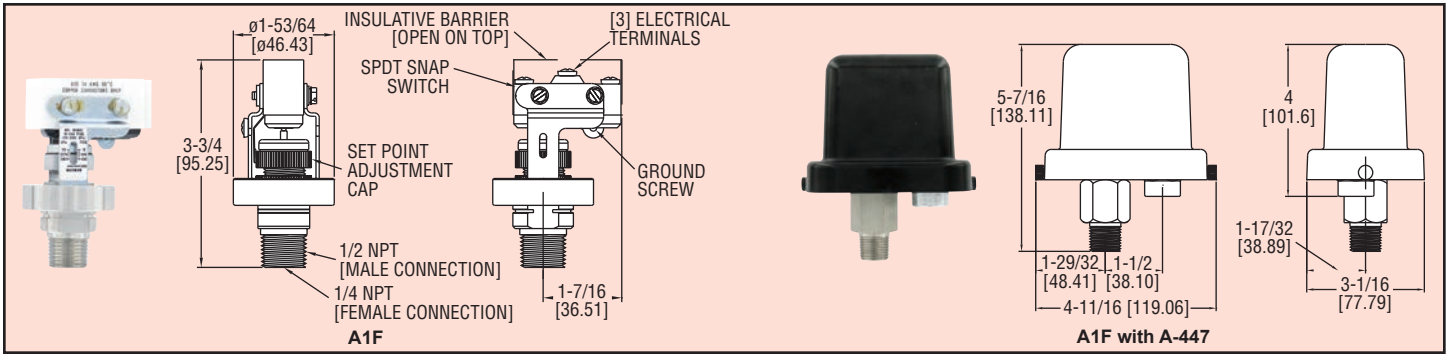

Low cost and precision made, the A1F Pressure Switch is ideal for OEM industrial applications. Wetted materials of 316 SS and fluorocarbon ensure great chemical compatibility with a wide range of process media. The open case style is perfect for panel mounting applications like pump skids. Field-installable weatherproof enclosure is available in polycarbonate offering a low cost weatherproof switch. Superior 15 A contact allows direct control of motors or pumps without the use of external relays, a true cost savings. Features include a convenient indicating scale for quick and easy field adjustment.

Model	Range	Deadband at Min Range	Deadband at Max Range
A1F-O-SS-1-1	2 to 15 (0.14 to 1.03)	2 (0.14)	3 (0.21)
A1F-O-SS-1-2	4 to 75 (0.28 to 5.17)	4 (0.27)	15 (1.0)
A1F-O-SS-1-3	8 to 225 (0.55 to 15.5)	8 (0.55)	25 (1.7)
A1F-O-SS-1-4	16 to 450 (1.1 to 31.0)	15 (1.0)	50 (3.5)

psig (bar)

ACCESSORY

A-447, Weatherproof enclosure; Easy field installation; Meets NEMA 4X, polycarbonate cover with 1/2″ NPT female conduit entry.

SPECIFICATIONS

Service: Compatible liquids and gases.
Wetted Materials: Pressure Chamber: 316 SS; Diaphragm: Fluorocarbon.
Temperature Limit: -40 to 175°F (-40 to 80°C).
Pressure Limits: 750 psig (51 bar).
Enclosure Rating: No rating for open construction. Installed properly within an optional A-447 enclosure meets NEMA 4X (IP66) standards.
Switch Type: SPDT snap switch.
Electrical Rating: 15 A @ 120/240/480 VAC; 1/8 HP @ 125 VAC; 1/4 HP @ 250 VAC.
Electrical Connection: Screw terminals.
Process Connection: 1/4″ female NPT and 1/2″ male NPT.
Mounting Orientation: Within 20° of vertical.
Set Point Adjustment: Knurled screw cap with indicating scale.
Deadband: Fixed. See deadband chart.
Weight: 10.5 oz (297 g).
Agency Approvals: CE, cUL, UL.

OPTION

Weatherproof enclosure. Optional A-447 enclosure factory installed. To order change “O” to “PC”.
Example: A1F-PC-SS-1-1

Fliteway Technologies, Inc.

Treated Water Storage Tank

2129 East Birchwood Ave. Cudahy, WI 53110

(414) 483-5600 1-800-236-3580 FAX (414) 483-1957

See Groundwater Treatment Feed Tank Section

Fliteway Technologies, Inc.

Treated Water Pump Skid

2129 East Birchwood Ave. Cudahy, WI 53110

(414) 483-5600 1-800-236-3580 FAX (414) 483-1957

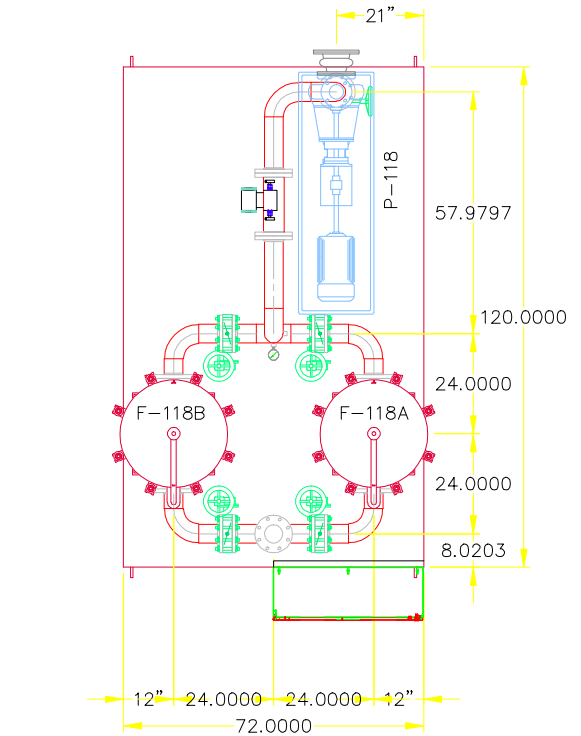

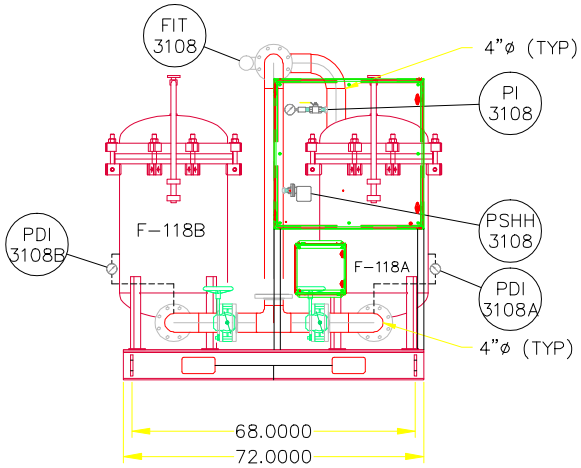

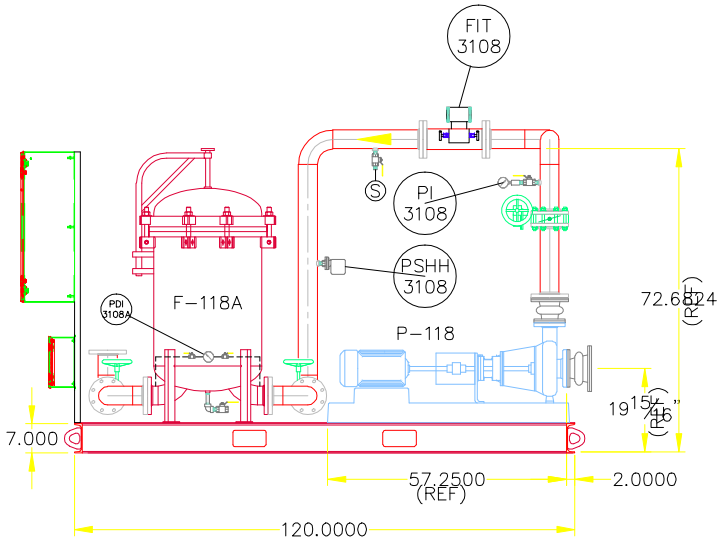

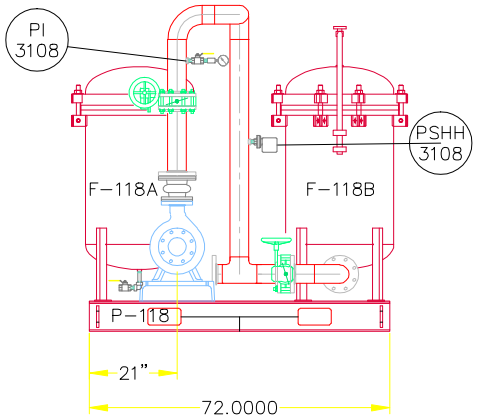

THIS DRAWING IS THE PROPERTY OF
Fliteway Technologies, Inc
2129 EAST BIRCHWOOD AVE
CUDAHY WI, 53110
414.483.5600 414.483.1957

AND IS NOT TO BE REPRODUCED WITHOUT WRITTEN PERMISSION

6'X10' TREATED WATER PUMP SKID

CB&I WATER TREATMENT

3/19/15	SIZE	FSCM NO.	DWG NO. Q14508
	SCALE NONE		SHEET 1 OF 1

CRANE ENGINEERING SALES

February 9, 2015

Proposal No: TS14-12-11 01
Item No: Discharge Pump

MODEL:3196 MTi SIZE:3x4-8G QTY: 1

i-FRAME™

Operating Conditions

SERVICE

LIQUID	Groundwater Temp. 70.0 deg F, SP.GR 1.000, Viscosity 1.000 cp, rated / max. suction pressure 0.0 / 0.0 psi g
CAPACITY Rated	400.0 gpm
HEAD	180.0 (ft)

Performance at 3550 RPM per HI 14.6 1B basis power

PUBLISHED EFFY	68.0% (CDS)
RATED EFFY	67.0% with contract seal
RATED POWER	27.2 hp (incl. Mech. seal drag 0.44). (Run out 33.1 hp)
NPSHR	12.6 ft
DISCH PRESSURE (R)	78.3 psi g (88.6 psi g @ Shut off) based on 0.0 psi g rated suction pressure
PERF. CURVE	1592-4 (Rotation CW viewed from coupling end)
SHUT OFF HEAD	204.8 ft
MIN. FLOW	Continuous Stable: 161.6 gpm Hydraulic: 161.6 gpm Thermal: N/A

Materials

CONSTRUCTION	Ductile iron
CASING	Ductile iron (max.casing pressure @ rated temperature 250.0 psi g)
ST.BOX COVER	Ductile iron
IMPELLER	Ductile iron - Open (7.1250 in rated, max=8.3750 in, min=5.5000 in)
CASING GASKETS	Aramid Fiber with EPDM and Silicate Filler
IMPELLER O-RING	Teflon
SHAFT MATERIAL	SAE 4140
SHAFT SLEEVE	316SS
LUBRICATION	Flood oil
SEAL CHAMBER	Taper bore plus with axial ribs
GLAND	316SS Flush quench and drain
BEARINGS	6309 (Inboard) 3309 (Outboard)
COUPLING	Rexnord - Omega Rex Elastomer- ES-10 (standard orange element)-S.F. 1.00
COUPLING GUARD	Carbon steel
BASEPLATE	Cast iron camber top B00051A

Sealing Method

MECHANICAL SEAL	John Crane 5611Q X(1)F(50)1XO(58)1 (Carbon vs Silicon Carbide with Viton) - (Cartridge - Single)

Flanges

150# flat face

Frame Connections

Bearing frame drain

Frame cooler access

Oil fill connection

Frame features

Ductile iron frame adapter

Inpro VBXX-D Hybrid Bearing Isolators

Premium Severe Duty Thrust Bearings

i- ALERT™ Condition Monitor

Assembly and Testing

Casing & Cover - Standard hydro test

Impeller balanced to ISO G6.3

Painting

Goulds Blue standard painting

Warranty

5 Year Extended Warranty (All the components, manufactured by ITT Goulds pumps, in the liquid end and power end are covered).

Driver : Electric motor Manufacturer : Pump mfg's Choice

FURNISHED BY	Pump mfg	MOUNTED BY	Pump mfg
RATING	40.0 hp (29.8 KW)	ENCLOSURE	TEFC - Premium Efficiency
PHASE/FREQ/VOLTS	3/60 Hz/460	SPEED	3600 RPM
INSULATION/SF	F/1.15	FRAME	324TS

Freight Terms

Freight invoices received from ITT partner carriers are proprietary information and cannot be divulged for any reason. ITT will provide an ITT generated freight invoice upon request.

Weights and Measurements

TOTAL NET UNIT WEIGHT / VOLUME	**1,016.0 lb / 14.8 ft³**
TOTAL GROSS UNIT WEIGHT / GROSS VOLUME	**1,204.2 lb / 38.2 ft³**

Program Version 1.51.0.1

Drawing Revision Limit

Drawings returned with status approved as noted or revise and re-submit will be corrected and resubmitted only once. Thereafter, additional comments or revisions to these drawings will incur a charge of $250 per drawing.

Our offer does not include specific review and incorporation of any Statutory or Regulatory Requirements and the offer is limited to the requirements of the design specifications. Should any Statutory or Regulatory requirements need to be reviewed and incorporated then the Customer is responsible to identify those and provide copies for review and revision of our offer.

Our quotation is offered in accordance with our comments and exceptions identified in our proposal.

Click here to download the pump Bulletin

Click here to learn more about the new *i-FRAME™*

GOULDS PUMPS

OUTLINE DRAWING

Model 3196 MTi
Size 3x4-8G

ITT

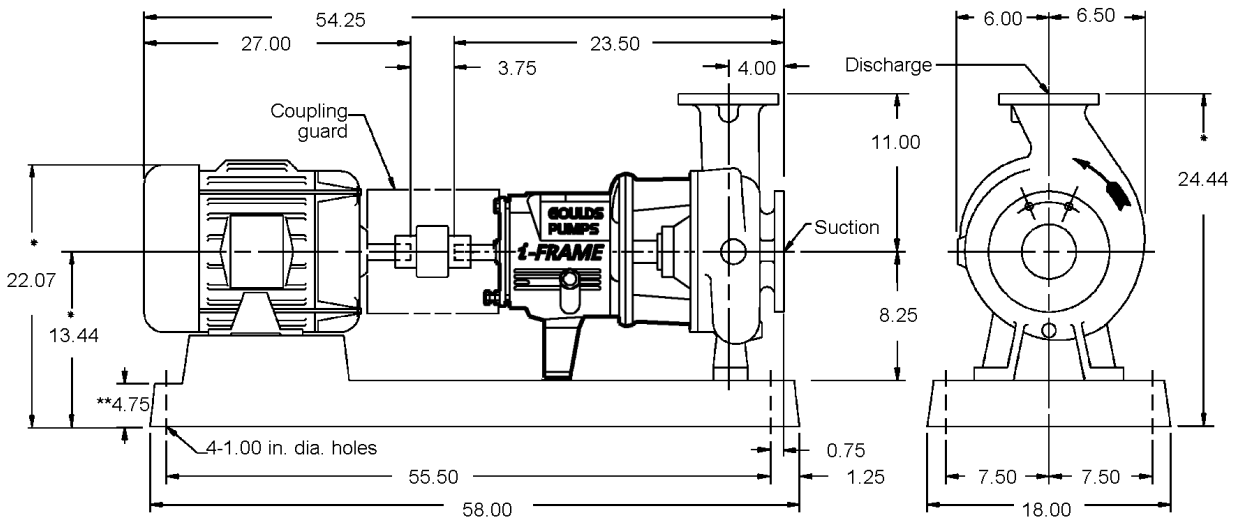

Pump Specification

SUCT.FLANGE SIZE	*4"*	DRILLING	*ANSI 150#*	FACING	*FF*	FINISH	*SERRATED*
DISCH.FLANGE SIZE	*3"*	DRILLING	*ANSI 150#*	FACING	*FF*	FINISH	*SERRATED*
PUMP ROTATION (LOOKING AT PUMP FROM MOTOR)				*CW*			
TYPE OF LUBRICATION	*FLOOD OIL*					COOLED	*NO*
TYPE OF STUFFING BOX	*TAPER BORE PLUS WITH AXIAL RIBS*					COOLED	*NO*
TYPE OF SEALING	*MECHANICAL SEAL*						

Weights and Measurements

PUMP	*240.0 lb*
MOTOR/CPLG	*560.0/11.0 lb*
BASEPLATE	*205.0 lb*
TOTAL	*1,016.0 lb*
GR.VOLUME w/BOX	*38.2 ft³*
GR.WEIGHT w/BOX	*1,204.2 lb*

Motor Specification

MOTOR BY	*PUMP MFG*	MOUNT BY	*PUMP MFG*	MFG.	*PUMP MFG'S CHOICE*
FRAME	*324TS*	POWER	*40.0 hp*	RPM	*3600*
PHASE	*3*	FREQUENCY	*60 HZ*	VOLTS	*460*
INSULATION	*F*	S.F.	*1.15*		
ENCLOSURE	*TEFC - PREMIUM EFFICIENCY*				

Notes and References

- MTR DIMENSIONS ARE APPROXIMATE
- INSTALL FOUNDATION BOLTS IN PIPE SLEEVES
- ALLOW FROM 0.75 to 1.50in. FOR GROUTING. SEE INSTRUCTION BOOK FOR DETAILS.

*Tolerance is +0 -0.5

** Foundation bolt grip thickness

FOR PUMP TAPPED OPENINGS REFER TO DWG.:
TTS14-12-11 01 / Discharge Pump

Auxiliary Specification

COUPLING BY	*PUMP MFG*	CPLG TYPE	*REXNORD OMEGA REX ELASTOMER- ES-10 (STANDARD ORANGE*
CPL GUARD BY	*PUMP MFG*	CPLG GUARD MATL	*CARBON STEEL*
BASEPLATE	*CAST IRON CAMBER TOP B00051A*		
MECH.SEAL	*JOHN CRANE 5611Q X(1)F(50)1XO(58)1 (CARBON VS SILICON CARBIDE WITH VITON)*		

DRAWING IS FOR REFERENCE ONLY.
NOT CERTIFIED FOR CONSTRUCTION UNLESS SIGNED.

Customer: CRANE ENGINEERING SALES
Serial No:
Customer P.O. No:
Item No: Discharge Pump
End User: .
Service:

Copyright 2015
ITT Corp

All dimensions are in inches.
Drawing is not to scale
Weights (lbs) are approximate

DRAWING NO TS14-12-11 01/Discharge Pump

Model: 3196	Size: 3x4-8G	Group: MTi	60Hz	RPM: 3550	Stages: 1

Job/Inq.No. :
Purchaser : CRANE ENGINEERING SALES
End User: .
Issued by : Tom Schroeder
Item/Equip.No. : Discharge Pump
Quotation No. : TS14-12-11 01
Date : 02/09/2015
Service :
Order No. :
Certified By :
Rev. : 0

Operating Conditions

Liquid:	Groundwater
Temp.:	70.0 deg F
S.G./Visc.:	1.000/1.000 cp
Flow:	400.0 gpm
TDH:	180.0 ft
NPSHa:	0.0 ft
Solid size:	
% Susp. Solids (by wtg):	

Pump Performance

Published Efficiency:	68.0 %	Suction Specific Speed:	10,167 gpm(US) ft
Rated Pump Efficiency:	67.0 %	Min. Hydraulic Flow:	161.6 gpm
Rated Total Power:	27.2 hp	Min. Thermal Flow:	N/A
Non-Overloading Power:	33.1 hp		
Imp. Dia. First 1 Stg(s):	7.1250 in		
NPSHr:	12.6 ft		
Shut off Head:	204.8 ft		
Vapor Press:		Max. Solids Size:	0.6880 in

Notes: 1. Power and efficiency losses are not reflected on the curve below.
2. Elevated temperature effects on performance are not included.

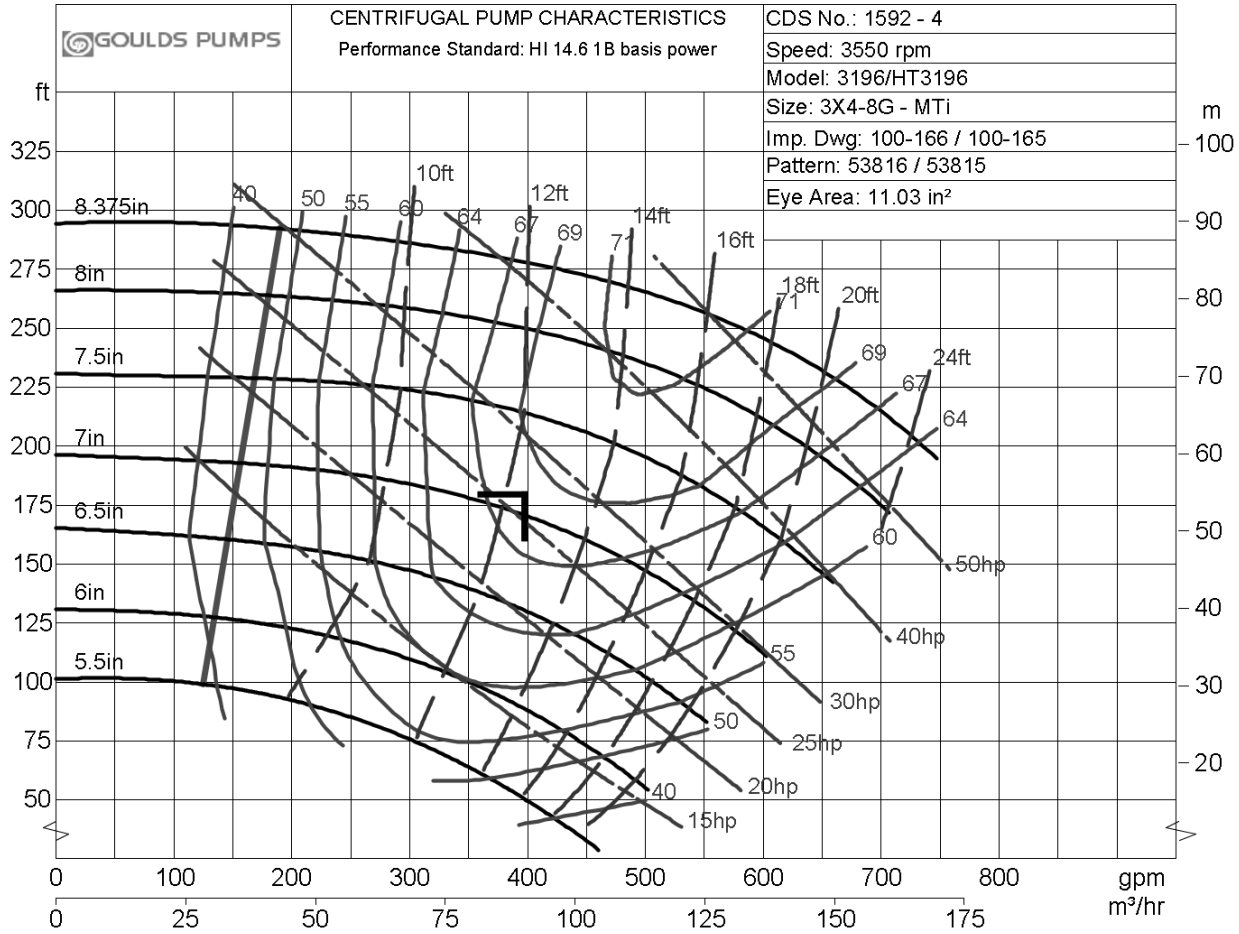

ITT

See Feed Pump Skid Section for Goulds Pump Manual

Fliteway Technologies, Inc.

Treated Water Pump VFD - Control Panel

2129 East Birchwood Ave. Cudahy, WI 53110

(414) 483-5600 1-800-236-3580 FAX (414) 483-1957

FEED PUMP SKID

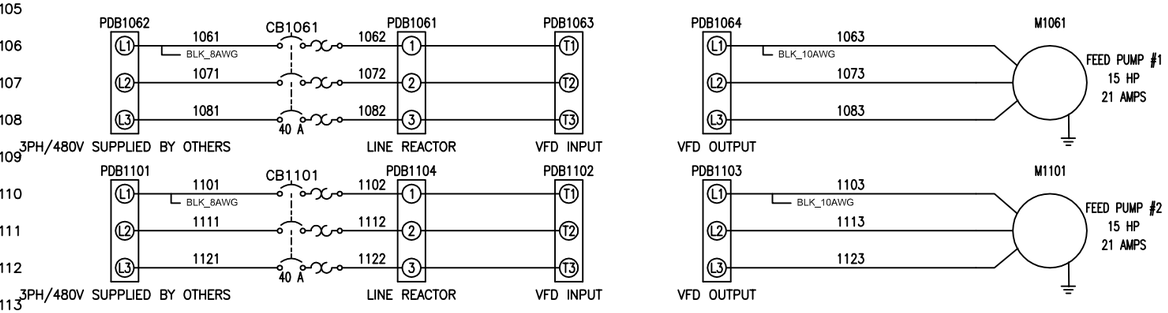

HIGH VOLTAGE PANEL

VFD FEED PUMP #1 WIRING

VFD TB 12	
VFD TB 13	VFD FAULT - PROVIDED OVER ETHERNET
VFD TB 15	
VFD TB 16	VFD RUNNING - PROVIDED OVER ETHERNET
VFD TB 25	N
VFD TB 28	120VAC VFD RUN SIGNAL (FROM MCP)

VFD FEED PUMP #2 WIRING

VFD TB 12	
VFD TB 13	VFD FAULT - PROVIDED OVER ETHERNET
VFD TB 15	
VFD TB 16	VFD RUNNING - PROVIDED OVER ETHERNET
VFD TB 25	N
VFD TB 28	120VAC VFD RUN SIGNAL (FROM MCP)

LOW VOLTAGE JUNCTION BOX

LOW VOLTAGE JBOX

HHL F/S	120VAC OR 24VDC CONTROL POWER
HHL F/S	TANK HHL ALARM (DRY CONTACT)
LL F/S	
LL F/S	TANK LLL (DRY CONTACT)
PRS. SW	
PRS. SW	HIGH PRESSURE SWITCH ALARM (N.O. DRY CONTACT)
FLOW METER	24VDC CONTROL POWER
FLOW METER	FLOW METER 4-20mA SIGNAL
FLOW METER	FLOW METER SHIELD WIRE
P1 THRM OL	120VAC CONTROL POWER
P1 THRM OL	FEED PUMP #1 MOTOR THERMAL OVERLOAD WIRED TO VFD, VIEWED OVER ETHERNET
P2 THRM OL	
P2 THRM OL	FEED PUMP #2 MOTOR THERMAL OVERLOAD WIRED TO VFD, VIEWED OVER ETHERNET
LVL TRANS	24VDC CONTROL POWER
LVL TRANS	LEVEL TRANSMITTER 4-20mA SIGNAL
LVL TRANS	LEVEL TRANSMITTER SHIELD WIRE

TREAT WATER PUMP SKID

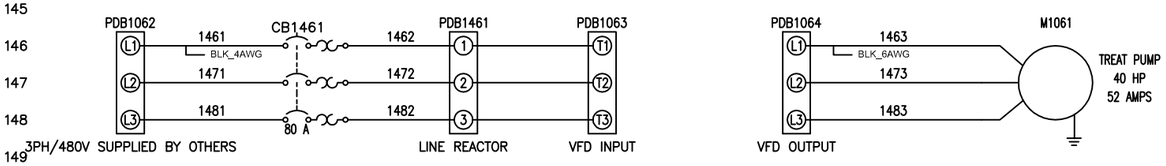

HIGH VOLTAGE PANEL

VFD TREAT PUMP WIRING

VFD TB 12	
VFD TB 13	VFD FAULT - PROVIDED OVER ETHERNET
VFD TB 15	
VFD TB 16	VFD RUNNING - PROVIDED OVER ETHERNET
VFD TB 25	N
VFD TB 28	120VAC VFD RUN SIGNAL (FROM MCP)

LOW VOLTAGE JUNCTION BOX

LOW VOLTAGE JBOX

HHL F/S	120VAC OR 24VDC CONTROL POWER
HHL F/S	TANK HHL ALARM (DRY CONTACT)
LL F/S	
LL F/S	TANK LLL (DRY CONTACT)
PRS. SW	
PRS. SW	HIGH PRESSURE SWITCH ALARM (N.O. DRY CONTACT)
FM 24V	24VDC CONTROL POWER
FM TR	FLOW METER 4-20mA SIGNAL
FM S	FLOW METER SHIELD WIRE
TP THRM OL	120VAC CONTROL POWER
TP THRM OL	TREATMENT PUMP MOTOR THERMAL OVERLOAD WIRED TO VFD, VIEWED OVER ETHERNET
LVL TRANS	24VDC CONTROL POWER
LVL TRANS	LEVEL TRANSMITTER 4-20mA SIGNAL
LVL TRANS	LEVEL TRANSMITTER SHIELD WIRE

THIS PRINT AND ITS CONTENTS ARE THE PROPERTY OF FLITEWAY AND MUST NOT BE USED FOR ANY PURPOSE NOT AUTHORIZED BY FLITEWAY. DO NOT DISCLOSE, REPRODUCE OR OTHERWISE USE THIS PRINT OR ITS CONTENTS IN ANY MANNER DETRIMENTAL TO THE INTEREST OF FLITEWAY WITHOUT FLITEWAY'S PRIOR WRITTEN CONSENT. FLITEWAY RESERVES ALL RIGHTS OF DESIGN AND INVENTION TO THE EXTENT PERMITTED BY LAW.

CAD SYSTEM ACADE	UNITS IN	Fliteway Technologies, Inc. 2129 East Birchwood Ave. Cudahy, WI 53110	DRAWN BY Josh	Q # Q14508	DESCRIPTION AS BUILT
SCALE 1:1	FORMAT D		DESIGNED FOR CB&I Federal Services		Drawing Number PAGE 1 OF 1

PLOTTED: 09-16-2015

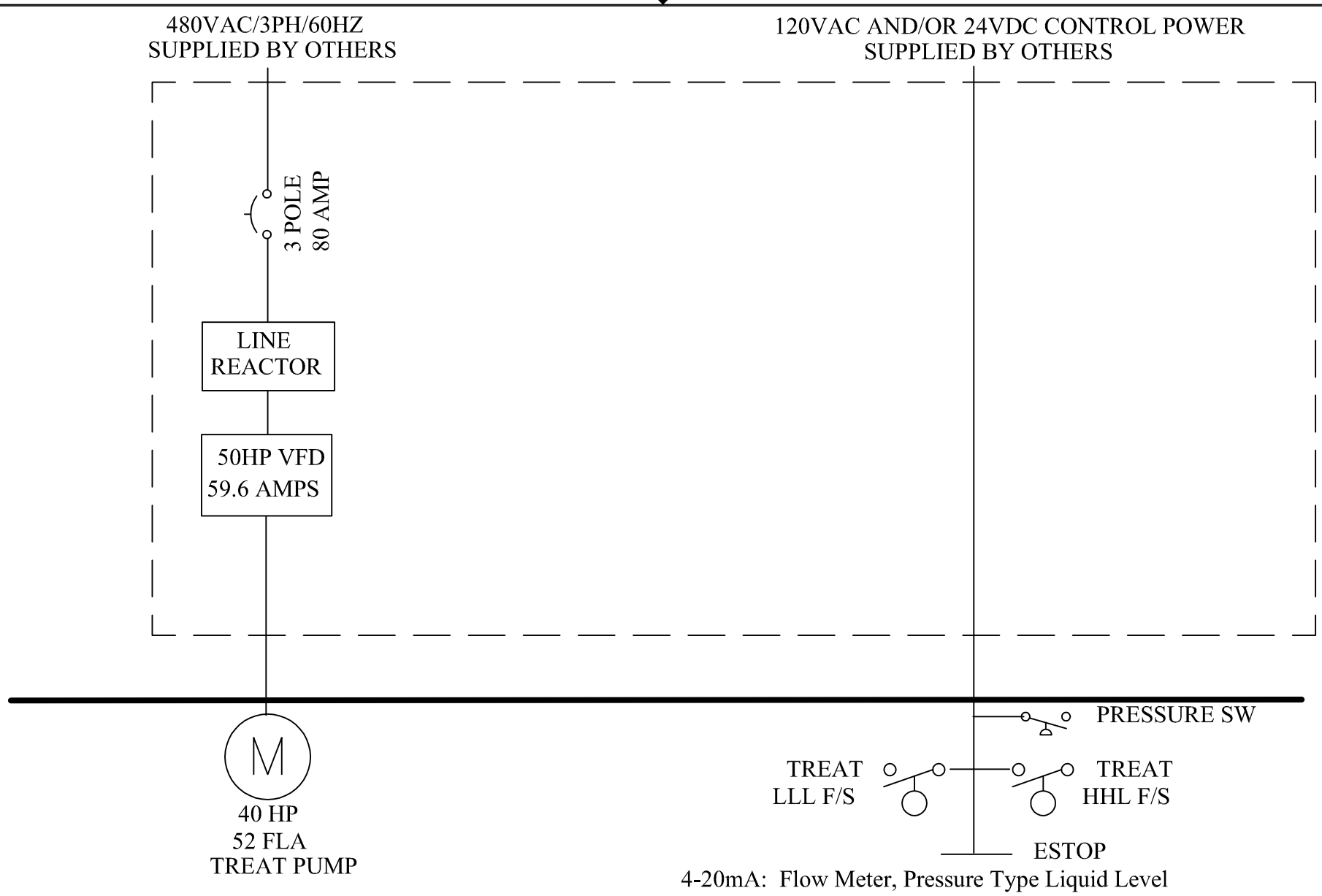

THIS DRAWING IS THE PROPERTY OF
Fliteway Technologies, Inc
2129 East Birchwood Avenue
Cudahy, WI 53110
414.483.5600 414.483.1957
AND IS NOT BE REPRODUCTED
WITH OUT WRITTEN PREMISSION

ONE LINE ELECTRICAL DIAGRAM

TREAT PUMP SKID

03/23/15

CB&I Federal Services

SIZE	FSCM NO.	DWG NO.	REV
		Q14508	5
SCALE NONE			SHEET

See Feed Pump VFD – Control Panel Section

Fliteway Technologies, Inc.

Air Compressor

2129 East Birchwood Ave. Cudahy, WI 53110

(414) 483-5600 1-800-236-3580 FAX (414) 483-1957

FEED PUMP SKID

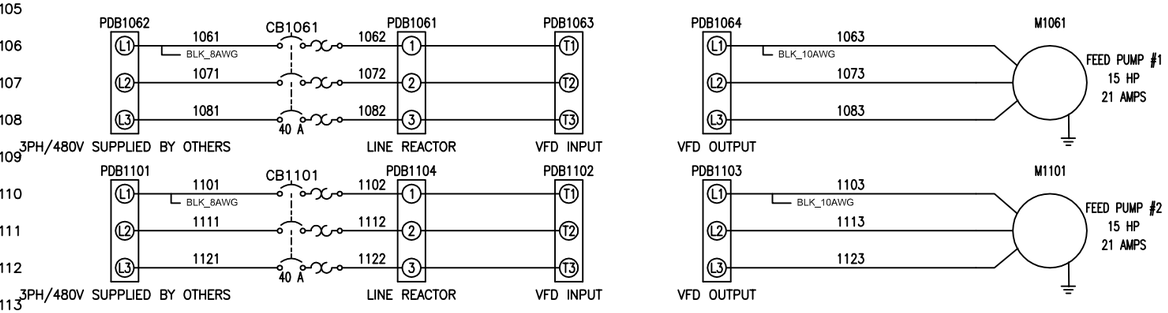

HIGH VOLTAGE PANEL

VFD FEED PUMP #1 WIRING

VFD TB 12	
VFD TB 13	VFD FAULT - PROVIDED OVER ETHERNET
VFD TB 15	
VFD TB 16	VFD RUNNING - PROVIDED OVER ETHERNET
VFD TB 25	N
VFD TB 28	120VAC VFD RUN SIGNAL (FROM MCP)

VFD FEED PUMP #2 WIRING

VFD TB 12	
VFD TB 13	VFD FAULT - PROVIDED OVER ETHERNET
VFD TB 15	
VFD TB 16	VFD RUNNING - PROVIDED OVER ETHERNET
VFD TB 25	N
VFD TB 28	120VAC VFD RUN SIGNAL (FROM MCP)

LOW VOLTAGE JUNCTION BOX

LOW VOLTAGE JBOX

HHL F/S	120VAC OR 24VDC CONTROL POWER
HHL F/S	TANK HHL ALARM (DRY CONTACT)
LL F/S	
LL F/S	TANK LLL (DRY CONTACT)
PRS. SW	
PRS. SW	HIGH PRESSURE SWITCH ALARM (N.O. DRY CONTACT)
FLOW METER	24VDC CONTROL POWER
FLOW METER	FLOW METER 4-20mA SIGNAL
FLOW METER	FLOW METER SHIELD WIRE
P1 THRM OL	120VAC CONTROL POWER
P1 THRM OL	FEED PUMP #1 MOTOR THERMAL OVERLOAD WIRED TO VFD, VIEWED OVER ETHERNET
P2 THRM OL	
P2 THRM OL	FEED PUMP #2 MOTOR THERMAL OVERLOAD WIRED TO VFD, VIEWED OVER ETHERNET
LVL TRANS	24VDC CONTROL POWER
LVL TRANS	LEVEL TRANSMITTER 4-20mA SIGNAL
LVL TRANS	LEVEL TRANSMITTER SHIELD WIRE

TREAT WATER PUMP SKID

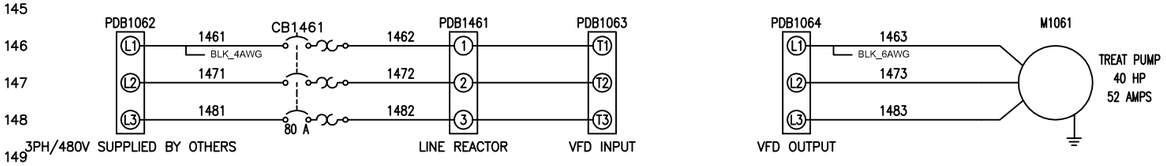

HIGH VOLTAGE PANEL

VFD TREAT PUMP WIRING

VFD TB 12	
VFD TB 13	VFD FAULT - PROVIDED OVER ETHERNET
VFD TB 15	
VFD TB 16	VFD RUNNING - PROVIDED OVER ETHERNET
VFD TB 25	N
VFD TB 28	120VAC VFD RUN SIGNAL (FROM MCP)

LOW VOLTAGE JUNCTION BOX

LOW VOLTAGE JBOX

HHL F/S	120VAC OR 24VDC CONTROL POWER
HHL F/S	TANK HHL ALARM (DRY CONTACT)
LL F/S	
LL F/S	TANK LLL (DRY CONTACT)
PRS. SW	
PRS. SW	HIGH PRESSURE SWITCH ALARM (N.O. DRY CONTACT)
FM 24V	24VDC CONTROL POWER
FM TR	FLOW METER 4-20mA SIGNAL
FM S	FLOW METER SHIELD WIRE
TP THRM OL	120VAC CONTROL POWER
TP THRM OL	TREATMENT PUMP MOTOR THERMAL OVERLOAD WIRED TO VFD, VIEWED OVER ETHERNET
LVL TRANS	24VDC CONTROL POWER
LVL TRANS	LEVEL TRANSMITTER 4-20mA SIGNAL
LVL TRANS	LEVEL TRANSMITTER SHIELD WIRE

THIS PRINT AND ITS CONTENTS ARE THE PROPERTY OF FLITEWAY AND MUST NOT BE USED FOR ANY PURPOSE NOT AUTHORIZED BY FLITEWAY. DO NOT DISCLOSE, REPRODUCE OR OTHERWISE USE THIS PRINT OR ITS CONTENTS IN ANY MANNER DETRIMENTAL TO THE INTEREST OF FLITEWAY WITHOUT FLITEWAY'S PRIOR WRITTEN CONSENT. FLITEWAY RESERVES ALL RIGHTS OF DESIGN AND INVENTION TO THE EXTENT PERMITTED BY LAW.

CAD SYSTEM ACADE	UNITS IN	Fliteway Technologies, Inc. 2129 East Birchwood Ave. Cudahy, WI 53110	DRAWN BY Josh	Q # Q14508	DESCRIPTION AS BUILT
SCALE 1:1	FORMAT D		DESIGNED FOR CB&I Federal Services		Drawing Number PAGE 1 OF 1

PLOTTED: 09-16-2015

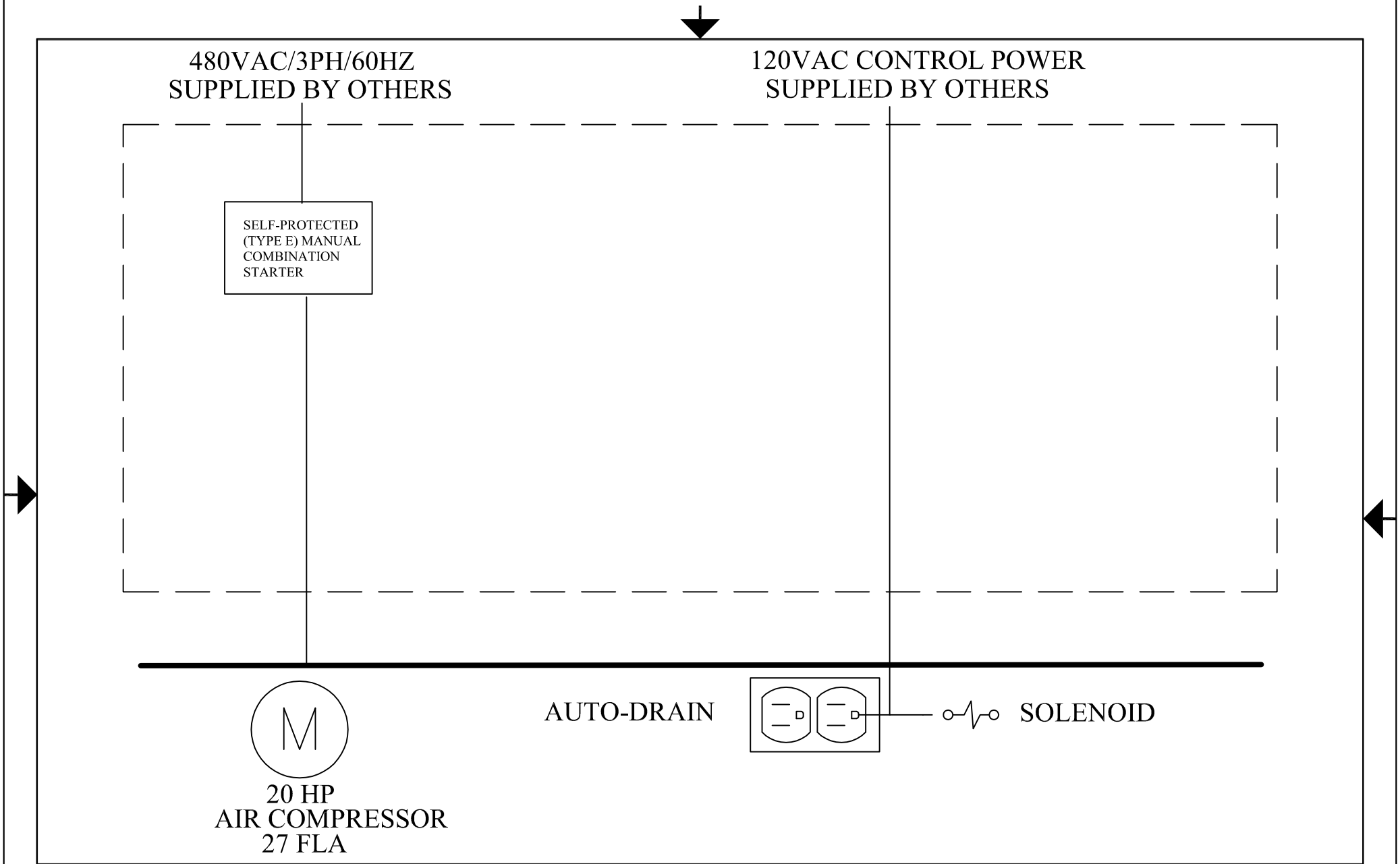

THIS DRAWING IS THE PROPERTY OF
Fliteway Technologies, Inc
2129 East Birchwood Avenue
Cudahy, WI 53110
414.483.5600 414.483.1957
AND IS NOT BE REPRODUCTED
WITH OUT WRITTEN PREMISSION

ONE LINE ELECTRICAL DIAGRAM

COMPRESSORSKID

03/23/15

CB&I Federal Services

SIZE	FSCM NO.	DWG NO.	REV
		Q14508	5
SCALE NONE			SHEET

AC SERIES
AIR COMPRESSORS

15 through 350 SCFM

mattei®
BEST SOLUTIONS IN COMPRESSED AIR

AC SERIES HIGH-EFFICIENCY AIR COMPRESSORS

Engineered for Superior Performance & Energy Efficiency

WE BUILD A BETTER COMPRESSOR

Founder Enea Mattei believed there was a better and more energy efficient way to generate compressed air. So, he focused his engineering on the inherent advantages of rotary vane technology and engineered in:

a) superior reliability
b) maximum mechanical & electrical efficiency
c) the most compressed air generated while consuming the least amount of electricity

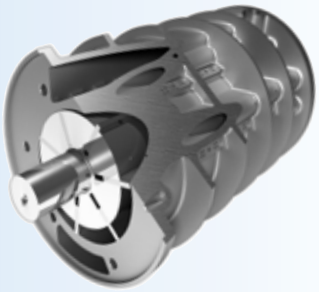

In effect, Mattei redefined the process of compressing air when he invented his first rotary vane air compressor over 50 years ago.

UNBEATABLE PERFORMANCE

AC Series air compressors offer our customers the next level of sophistication. Featuring quiet {as low as 68 dB(A)} cabinet enclosures, electronic controllers, energy saving soft-start Wye-Delta motor starters, TEFC motors, air-cooled aftercoolers and optional integrated refrigerated air dryers, we invite you to experience the revolution. Mattei rotary vane air compressors are truly in a class of their own and known for their dependable operation and low maintenance. AC Series raises the bar with unbeatable performance and energy savings with package flow rates from 15 to 350 SCFM.

UNRIVALED PERFORMANCE AND DURABILITY

Today, Mattei continues to leverage advancements in technology, materials and within our exclusive airends (approximately 90% volumetric efficiency) to offer the best value in premium quality air compressors found anywhere on the planet.

REVOLUTIONARY 10 YEAR WARRANTY

Imagine "bearingless" Airends that carry a 10 Year Warranty as standard, and last up to 100,000 hours (*2-3 times the life of rotary screws*) without needing an overhaul, unrivaled super quiet operation, and the most energy stingy designs in the industry.

It's a fact; Mattei is in a class of its own. Want to protect productivity, increase profitability, and lessen your carbon footprint?

Get your last air compressor first. Get a Mattei.

Get your last air compressor first. GET A MATTEI.

GET MORE FOR LESS

AC Series use our most advanced airend designs. Unlike typical rotary screw compressors, AC Series models use precision matched airends, direct-coupled to high efficiency motors that revolve at just 1,800 rpm, to deliver maximum energy efficiency and performance at design pressure. Thus, it is not uncommon to select a smaller HP AC Series model to meet the air demands of the customer.

For example, say you need about 130 SCFM. MATTEI can offer you our traditional 30 HP ERC Series model (129 scfm) or, we can offer you our 25 HP AC Series rated at 130 SCFM. Each produces about the same volume of air, but that 5 HP difference saves you money the moment you turn it on — that's why upgrading to an AC Series just makes sense. AC Series helps you get more air for less energy. Lower your electric bill month-after-month, year-after-year.

Get more for less. Get a MATTEI.

Figure 1:
Potential energy cost savings from lower AC Series nominal motor HP ratings for comparable SCFM production. Assumes 8,760 hours/year, 10 cents/kWh.

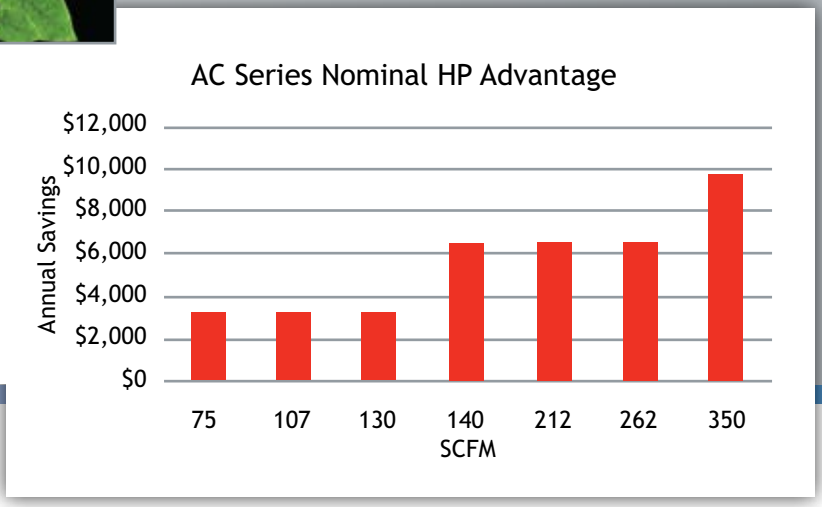

Mattei compressors are designed to give constant top performance 24 hours a day, every day of the year. Extremely rugged and reliable, AC Series is designed for outstanding performance and efficiency.

Rely on AC Series for:

- Superior SCFM/HP performance
- Unaltered performance through time
- System friendly demand adaptable controls
  - Automatic Load/No Load
  - Load matching Modulation
  - Automatic with Modulation
- No wear of the compressor's moving mechanical parts
- Compact design
- Low oil volume and consumption
- Direct coupled compressor and motor
- Slow 1,800 RPM rotational speed
- Low maintenance
- Quiet operation

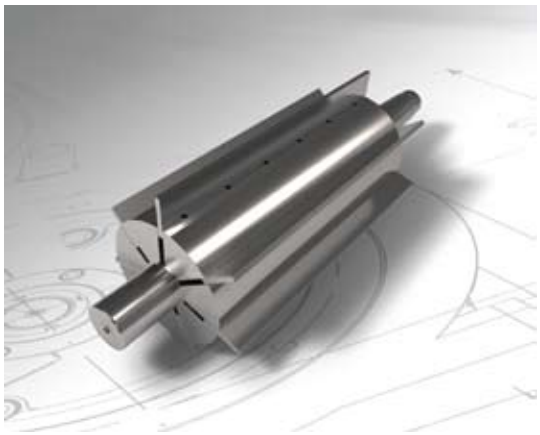

WHY MATTEI® IS YOUR BEST CHOICE

AC SERIES AIR
Sophisticated. S

SIMPLY SUPERIOR

All MATTEI air compressors retain the same heritage of innovation, durability and reliability. AC Series are highly-efficient cabinet style air compressors that raise the bar in delivering superior value, unrivaled high-capacity performance and energy efficient operation.

AC Series must be compared on an SCFM basis — not based on HP. Why? Because, AC Series uses our most advanced airends to produce more SCFM per HP than typical rotary air compressors, so to do a fair comparison, you usually need to select the next smaller size. In fact, it is not uncommon to get the same level of SCFM output from the next smaller AC Series model.

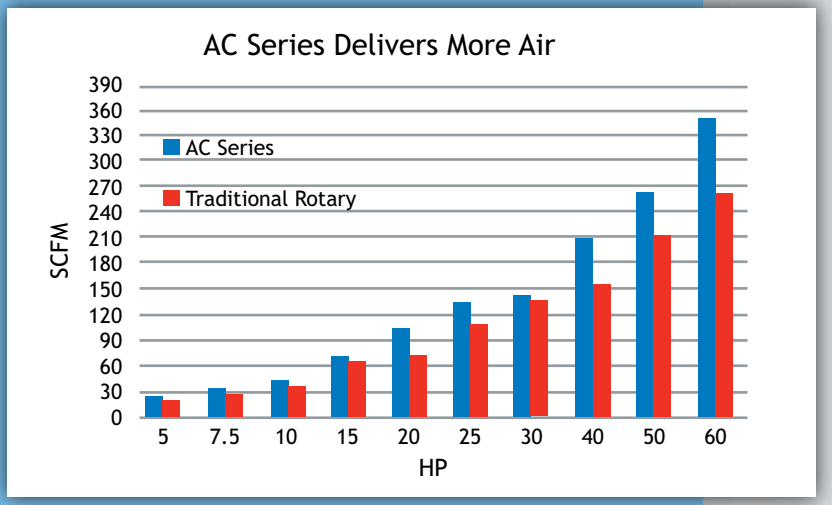

Figure 2:
AC Series uses less nominal HP to deliver more SCFM.

HOW IT WORKS

Ambient air is drawn through a filter into the compression chamber consisting of a stator in which an eccentrically arranged rotor revolves at 1,800 rpm. An air intake valve automatically adjusts incoming air volume to match your control scheme. The rotor has longitudinal slots in which the vanes slide. Zero-wear vanes ride on a thin film of oil and are held against the stator by centrifugal force. The air is compressed through the contraction in volume of each chamber formed by the vanes, the rotor and the stator wall. Sealing, cooling and lubrication are ensured by the oil injected into the chamber.

1. *Pleated oversized Air Filter*
2. *Automatic intake Valve*
3. *Oil chamber*
4. *Compression chamber*
5. *Oil filter*
6. *Rotor*
7. *Blades*
8. *Coalescing separator*
9. *Air/oil cooler (radiator)*
10. *Condensate Separator & Drain (optional)*

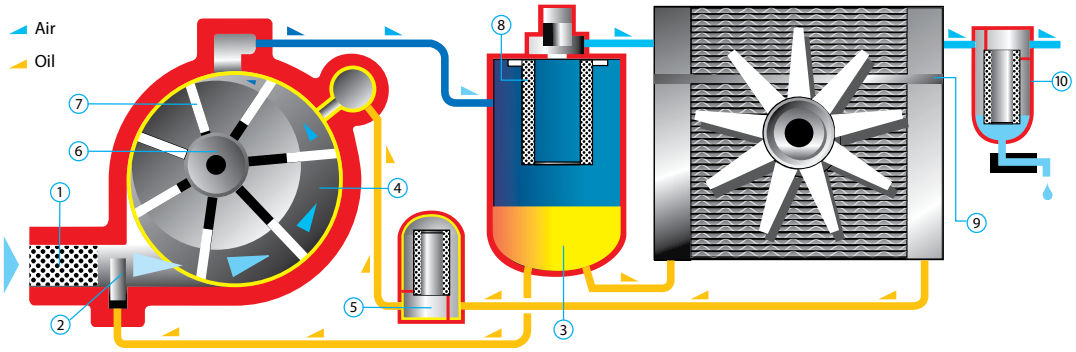

COMPRESSORS
Silent. Efficient.

Get your money's worth.
GET A MATTEI.

HIGH QUALITY COMPRESSED AIR

Mattei compressors have an exclusive and efficient oil separating system which occurs in three stages: in the initial stage most of the oil is separated in a labyrinth in the compression chamber; the flow then enters the separator chamber where a mechanical separation takes place through speed reduction and flow deviation; the last phase occurs through the separator element. Only 0.02% of the initial oil arrives to this final stage; this is the reason for which the average life of Mattei's separator element is 10,000 operating hours. Most importantly, this separating system guarantees a maximum oil residue of 3 ppm in Mattei's compressed air.

YOU GET WHAT YOU PAY FOR

It is not uncommon to get over 100,000 hours of service life out of our airends without a rebuild. MATTEI vane technology features zero-wear Meehanite™ cast iron blades that ride on a thin film of lubricant thus, preventing wear to the blade or stator wall. The heart of the unit is the rotor which is supported by two (2) white metal Babbitt bushings and spins at only 1,800 rpm.

AC Series is also friendly to your wallet and the environment. Each vane unit holds very little lubricant (typically less than half that of a screw type compressor) which saves you a small fortune on oil changes and disposal costs. The oil filter is cleanable — yes, cleanable. The highly efficient mechanical air/oil separation chamber delivers high quality air to the air/oil separator filter thus, it sees very little lubricant and provides up to 10,000 hours of service, and low 1-3 ppm oil carryover.

Get your money's worth. Get a MATTEI.

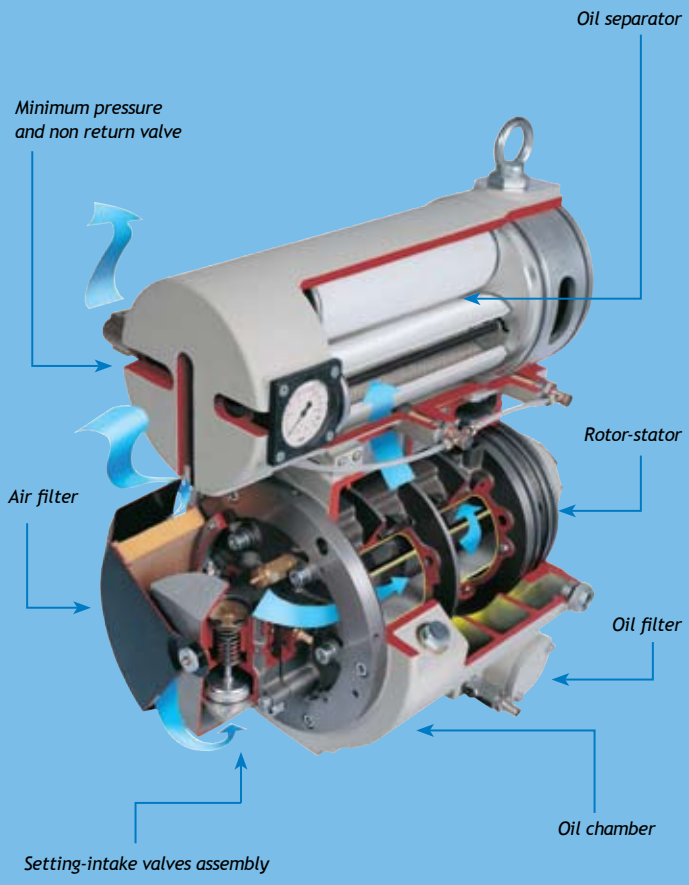

Figure 3:
Airend Construction

CAPACITY CONTROLS ADAPT TO YOUR DEMANDS

The layout and design of every air system is different. Some systems have very little air storage; some have an enormous volume of air storage. Some have small diameter air piping that is high in pressure drop; some have oversized piping to minimize pressure drop.

Thus, it is wise to select compressors with control schemes that can adapt to the demands and dynamics of your system. Mattei provides control flexibility to adapt to your system demands to help you save energy and prevent short-cycling and ambient oil misting problems created by inflexible control schemes and underutilized compressors.

Figure 4:
MATTEI Air Intake Control Valve Illustration

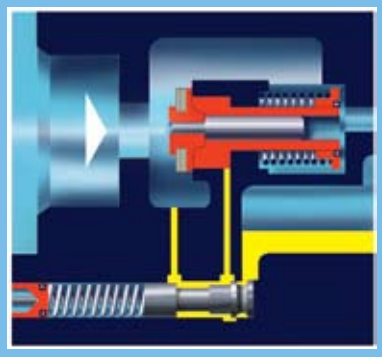

MODULATION OPERATING MODE AT CONSTANT PRESSURE

Thanks to a modulating proportional intake valve that supplies air at constant pressure, these compressors can even work without a receiver. With this regulation air delivery is automatically adapted to the system demand. Ideal for applications with little storage or continuous high air demands.

ENERGY SAVING AUTOMATIC LOAD / OFF LOAD

Load/Off Load mode maintains line pressure within a minimum/maximum pressure range, and the compressor may stop and restart according to air demand. “Load” initiates when the minimum pressure setting is reached and the compressor deliver 100% of its capacity. “Off Load” initiates when the maximum pressure setting is reached, and the intake valve closed and sump is decompressed to allow for a significant reduction of the absorbed power consumption. Should the pressure continue to remain high, the compressor will stop. Ideal for applications with adequate storage or large variations in air demand.

COMBINED ON/OFF LOAD AND MODULATION REGULATION

This regulation allows Mattei compressors to modulate within a set pressure range (for example, ± 4-5 psi). Should the air demand decrease, this regulation also allows the compressor to run off load and stop, with evident energy savings. Ideal for applications with little storage and large variations in demand

ADVANCED SYSTEM CONTROLLERS

MicroC: Standard on Models AC 4 & AC 5

Programmable microprocessor based control and protection system which controls compressor operation and adapts to the specific requirements of the air distribution system. MicroC offers a variety of programming levels and special options for controlling and analyzing system operation and faults. Advanced programming and analysis levels are protected by digital codes to avoid unintentional tampering. MicroC has an integrated memory module that stores the operational settings and data in case of power outage.

Figure 5:
MATTEI MicroC Controller

Figure 6:
MATTEI MAESTRO XS Controller

MAESTRO XS: Standard on Models AC 7 and larger

State-of-the-art computerized controller, Maestro XS automatically controls, monitors and programs the compressor's operation, and can be connected to a PC for remote control. In addition to providing all of the features found in the MicroC, Maestro XS can become master of a multi-compressor compressed air plant, thus saving on the installation of a dedicated Master controller, if connected to other compressed air packages equipped with Maestro XS controllers.

Figure 7: **AC SERIES CONTROLLER FEATURES**

			MicroC	MAESTRO XS
	LED Display	Basic 3 character alphanumeric codes	X	–
		Full text 4 lines of 20 characters	–	X
Electronic Controller Features	Operation Hour Counters	Power "On"	X	X
		Activation hours	X	X
		Run hours	X	X
		Loaded Hours	X	X
	Service Counters	Oil Change	X	X
		Separator Filter	X	X
		Automatic Restart after power failure	X	X
		Time/Day Compressor Start/Stop Settings	X	X
		Recordable Fault Events	5	20
		Alarm Coded Text with Icon based Signals	X	X
	Compressor Networking	Master & Slave Multi-Compressor Capable	–	X
		Cascade, Sequence, Equalization of Run Hours	–	X
	Optional	Expansion Module for Managing Integrated Refrigerated Air Dryer	X	X

AC SERIES PRODUCT FEATURES

		AC4-5	AC7-45
Electronic Controller	MicroC	X	—
	MAESTRO XS	—	X
	TEFC Motor	X	X
	Wye-Delta Motor Starter	X	X
System Adaptable Air Inlet Controls	Constant Pressure Modulation	X	X
	Automatic On Load/Off Load	X	X
	Combined On/Off Load and Modulation	X	X
	100,000 Hour Airend Design Life	X	X
	Direct-drive 1,800 rpm Airend	X	X
	10,000 Hour Air/Oil Separator Filter Design	X	X
	Cleanable Oil Filter	X	X
	Synthetic Rotor Oil 8000	X	X
Optional	High Efficiency Air Intake Filter Kit	X	X
	Condensate Drain & Moisture Separator Kit	X	X
	Soundproofing Intake Air Duct	X	X
	Integrated Refrigerated Air Dryer	X	X
	Integrated Oil/Water Separator	—	X
	Integrated Heat Recovery Kit	—	X

TECHNICAL FEATURES

Model[1]	Electric Motor Power		Free Air Delivery[2] LX	HX	HHX	Voltage	Sound Pressure Level[3]	Air Outlet	Dimensions (inches)	Wt. (net)
	HP	kW	115 PSIG	150 PSIG	175 PSIG	AC	db(A)	Rp	L x W x H	lbs.
AC 4	5	4	26	22	15	208V, 230V, 460V, 575V /3 Ph/60 Hz	67	1/2"	40 x 24 x 33	298
AC 5	7.5	5.5	36	29	24		67	1/2"	40 x 24 x 33	309
AC 7	10	7.5	49	43	42		67	3/4"	49 x 24 x 41	462
AC 11	15	11	75	66	58		67	3/4"	49 x 27 x 41	506
AC 15	20	15	107	94	85		69	1"	47 x 31 x 59	981
AC 18	25	18	130	112	91		69	1"	47 x 31 x 59	981
AC 22	30	22	140	127	110		69	1"	47 x 31 x 59	992
AC 30	40	30	212	202	173		68	2"	47 x 31 x 59	1,764
AC 37	50	37	262	244	207		68	2"	72 x 38 x 66	1,830
AC 45	60	45	350	307	254		68	2"	72 x 38 x 66	2,073

Working pressure: 109 psig for 115 psig unit; 143 psig for 150 psig unit; 167 psig for 175 unit.

[1] Models AC 7 and larger carry ULc approval [2] F.A.D. in accordance with ISO 1217:1996, annex "C" [3] According to PN8NTC2.3; value measured at 1 m distance ±3

Mattei Compressors, Inc. reserves the right to change or replace the data contained in this publication, without notice.

mattei®
BEST SOLUTIONS IN COMPRESSED AIR

COMPANY WITH QUALITY MANAGEMENT SYSTEM CERTIFIED BY DNV
= ISO 9001 : 2001 =

www.matteicomp.com

U.S.A.
MATTEI COMPRESSORS Inc
9635 Liberty Road, Suite E
Randallstown, MD 21133
Phone +1 410.521.7020
Fax +1 410.521.7024
e-mail: info@matteicomp.com

ITALY
ING. ENEA MATTEI SpA
Strada Padana Superiore, 307
20090 VIMODRONE (MI)
Tel + 39 02253051 - Fax +39 0225305243
e-mail: info@mattei.it

FRANCE
MATTEI COMPRESSEURS Sarl
Tel +33 1 60081212 - Fax +33 1 60085252
e-mail: info@mattei.fr

GERMANY
MATTEI KOMPRESSOREN DEUTSCHLAND GmbH
Tel +49 7151 5002560 - Fax +49 7151 5002565
e-mail: info@mattei-kompressoren.de

GREAT BRITIAN
MATTEI COMPRESSORS Ltd
Tel +44 (0)1789 450577 - Fax +44 (0)1789 450698
e-mail: info@mattei.co.uk

RUSSIAN FEDERATION
ING. ENEA MATTEI SpA
Tel +7-495-739 41 90 - Fax +7-495-739 41 90
e-mail: mattei@inbox.ru

SINGAPORE
ING. ENEA MATTEI SpA
Tel +65 6741 8187 - Fax +65 6741 6826
e-mail: mattei@singnet.com.sg

Member MEMBER OF CAGI Compressed Air & Gas Institute

	QUOTATION		Power (hp)
	ROTARY AIR COMPRESSOR		**20**
	AC 15 LX		
Ing. Enea Mattei S.p.A.	Product code *GEABFSX50A*	Page *1 of 10*	Rev *01/2009/GB*

Mattei rotary vane compressors are the result of 90 years of investments in research and development to improve performance and lessen the impact on the environment. Designed for industrial continuous operation, they provide consistent performance, reliability, functionality and ease of maintenance.

The “AC 15 LX” single stage rotary vane compressor is a complete stand-alone, air cooled stationary air center powered by an electric motor. The compressor is perfectly designed down to the smallest component, assembled by skilled technicians using top quality components and has critical components machined using the most advanced technology. This attention to detail places Mattei compressors at the highest position in the market.
Blades are designed for over 100,000 hours of operation.

REFERENCE CONDITIONS according to ISO 1217 :1996 annex "E"

- Intake pressure	psia	14.5
- Air inlet temperature	°F	+ 68
- Relative humidity	%	0

PERFORMANCE

- Air end	single stage rotary vane compressor	
- Nominal rotor speed	r.p.m.	1800
- Free air delivery at the working pressure (according to ISO 1217:1996 annex "C")	cfm	107
- Maximum working pressure	psig	115
- Working pressure	psig	109
- Oil cooling		by air
- Compressed air cooling		by air
- Maximum oil carry-over	ppm	≤ 3
- Terminal power at working pressure including the fan power	kW	20.1
- Total off-load power	hp	6.3
- Compressed air outlet high temperature	K	≤ 10
- Min/max acceptable ambient temperatures	°F	34 / 104
- Sound pressure level at 1 metre (according to PNEUROP-PN8NTC 2.3)	dB(A)	69

ELECTRIC MOTOR

prime electric motor asynchronous – three phase - 4 poles – short circuit winding

- Insulation	class	F
- Efficiency complying with		EFF 2
- Protection	IP	55
- Rated power	hp	20
- Voltage as per IEC 38	Volt	460
- Frequency	Hz	60

MAIN SIZES

- Length	in.	59.5
- Width	in.	31.5
- Height	in.	47.5
- Weight	lbs	992
- Air outlet size	Rp	1"
- Condensate drain outlet size (optional)	∅ mm	10
- Water inlet-outlet size (optional)	Rp	½ "

OPERATING PRINCIPLE

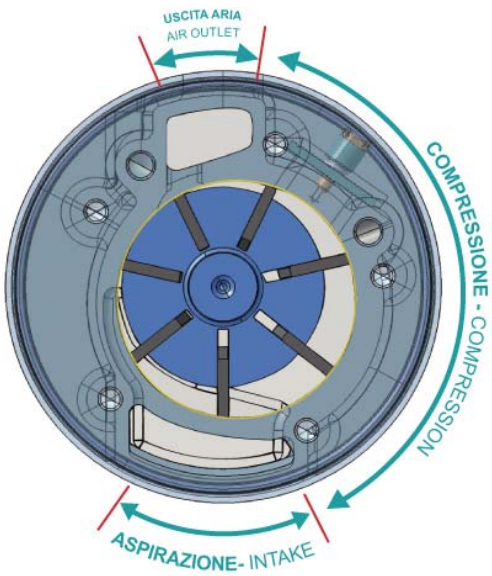

The vane compressor is a volumetric rotary compressor. It consists of a cylinder (stator) in which a rotor is mounted eccentrically between two end covers. The rotor has longitudinal slots in which the vanes slide. As the rotor turns the vanes are pushed against the stator by centrifugal force. Sealing of the moving parts, cooling and lubrication is accomplished by using a pressure differential lubrication system. There is no need for an oil pump as the oil is automatically circulated whenever the compressor is operating. An oil film on the inner surface of the stator wall prevents direct contact of the moving parts and avoids any wear. In the vane compressor there are no axial thrusts pushing the rotor against the end covers. Therefore there is no need for thrust bearings. The rotor is supported at each end by bush that has a practically unlimited lifetime. The decrease in volume of the pockets formed by the stator, rotor and vanes produces a continuous, pulse-free, compression.

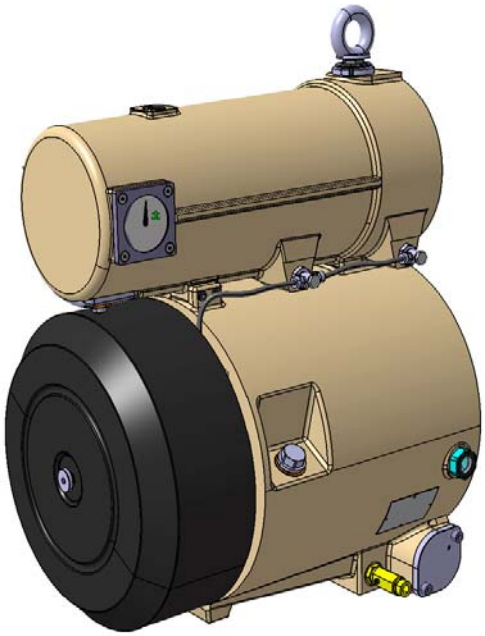

OIL SEPARATION

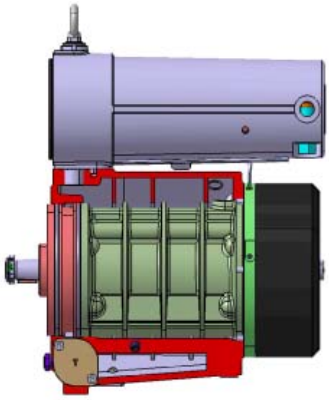

The air/oil separation occurs in different stages and ensures exceptionally low oil consumption. The main mechanical separation occurs in the oil chamber through a labyrinth path. Then it continues at the separator inlet, before the filter. This mechanical separation works via the continuous changes of direction of the air flow in the labyrinth path. The last separation occurs through the coalescing filter, removing the remaining oil vapor from the air. This particular oil separation system results in very reduced oil consumption. The large size of the filter and quality of materials ensure a long life of the filter itself.

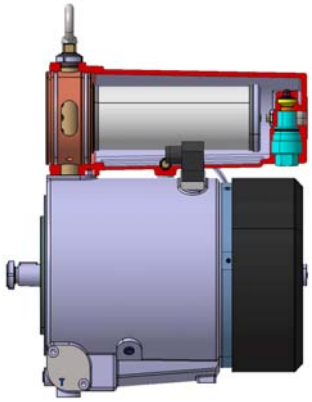

COOLING

The compressor is complete with two aluminum coolers, one for the oil and one for the compressed air. Cooling air is produced by a fan driven off the main electric motor.

A condensate separator and electronic drain with timer are available (see options). Enclosure openings and electrical connection points are supplied for powering the drain valve directly from the compressor control panel.

.

HEAT RECOVERY

As described in the previous paragraph, an air flow produced by the fan cools the oil and the compressed air. The heat removed creates a flow of hot air which can be used to heat work spaces during the winter season.

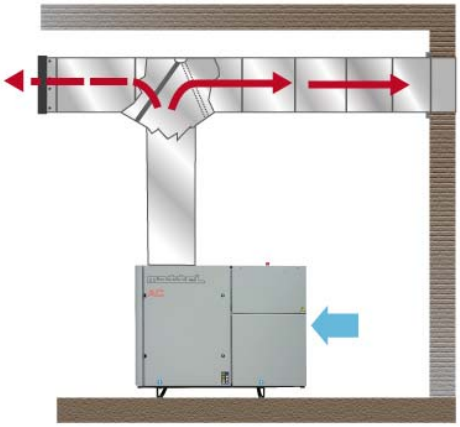

On average 1 kW installed power allows to heat about 30 cubic meters space by 1 K.

The compressor can be supplied with an “energy recovery” system upon request (see Optional equipment).

In the energy recovery system the oil passes through an oil-water heat exchanger controlled by a thermostatic valve located before the oil cooler. The heated water can then be used for industrial or sanitary purposes.

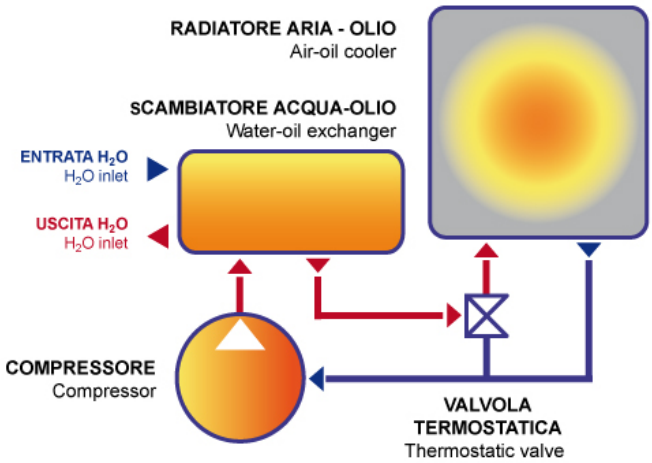

COUPLING

The compressor and the electric motor are connected by means of flexible coupling. This ensures a perfect alignment, no power absorption, silent operation and no need for maintenance.

CAPACITY REGULATION

To achieve maximum energy saving the compressor can be operated in three modes which can be selected through the control panel.

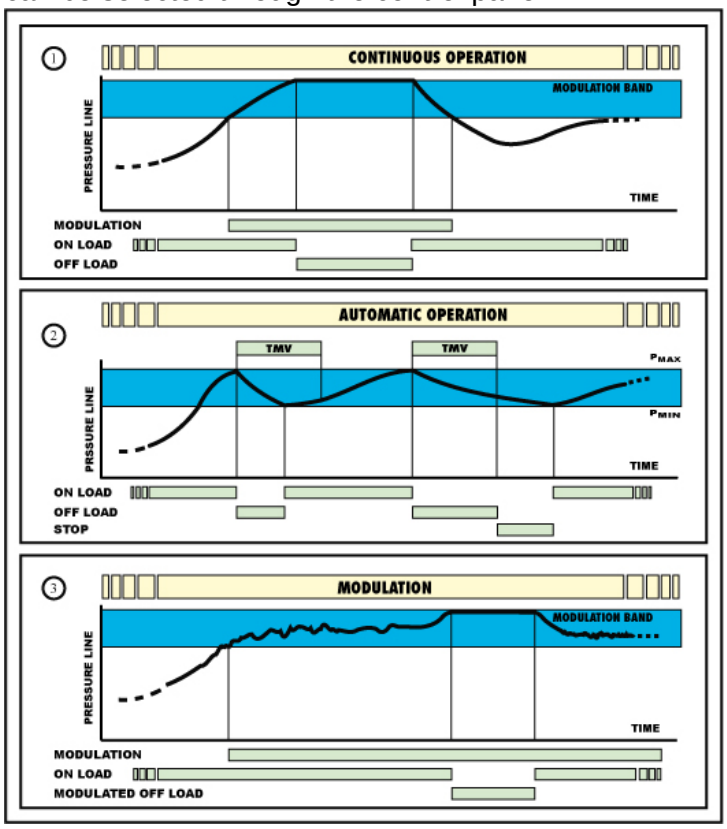

In “Continuous” operation the compressor delivers air within a preset maximum/minimum pressure range. When reaching the maximum pressure the intake valve closes. The compressor runs "off-load" and is decompressed to 21 psig to reduce the energy absorption. When the pressure decreases and reaches the minimum value, the compressor goes back to "load" and starts delivering air instantly.

In “Automatic” operation a further function is added to the previous one. This allows the compressor to stop automatically in case there is no air demand over a specific period of time.

In the ”Modulation” mode the air delivery is regulated and adjusted to the system demand by the hydraulically controlled intake system. This is a typical feature of Mattei compressors. The system includes an intake valve and a servovalve that work in conjunction to meet system demand. The compressor will have a maximum pressure that is set by the servovalve regulating system. When this is reached the intake valve closes and no more air is delivered. For pressures within 4 psi of the maximum pressure the compressor delivers a continuous and variable amount of air based on the system demand. At lower pressures the compressor delivers the maximum flow.

ELECTRIC STARTER

The metallic electric control box is IP-54 rated and includes:

- Star/delta starter
- Motor thermal overload protection relay
- 110 V transformer for auxiliary circuits
- 24 V transformer for MAESTRO^{XS} controller
- Primary and secondary circuit fuses
- Terminal board for remote start, stop and signal controls
- Emergency stop button
- Safety devices:

compressor high temperature - motor overload - low oil level - inadequate ventilation - high air and oil temperature - failure of pressure sensors - door safety switch

MICROPROCESSOR CONTROL AND PROTECTION SYSTEM " MAESTRO^{XS} "

Maestro^{XS} is a programmable system which controls the compressor operation and adapts this to the specific requirements of the air distribution system.
It has different programming levels and special options of controlling and analysing the operation and faults.
Advanced programming and analysis levels are protected by digital codes to avoid unintentional tampering.
Maestro^{XS} has an integrated memory module that stores the operational settings and data in case of an electricity cut out.

Hardware:

- Ergonomic control panel with keys for quick access to the main menu.
- Access keys to menu, start, stop and reset with “Led” indication.
- “LCD” semi-graphic display, lighted text – 8 lines for 22 letters.
- Supply 24 V AC 50/60Hz.
- Digital inputs 24 V DC.
- Digital outputs with volt free contacts up to 230V AC and up to 24V DC.
- Analog output 0-10 V DC.
- Pressure analog signals (4-20mA).
- Temperature analog signals (NTC).
- Interfaces:
  - RS485 to communicate with other “MAESTRO” devices
  - RS485 (optional) to communicate with PC supervisor and the network.

Software:

- Simple to use menu structure.
- Easily updated.
- Readouts include:
  - Analog data:
    - line pressure, separator pressure, oil chamber pressure, oil temperature, outlet air temperature.
  - General data:
    - alarms, operative messages, machine status, maximum and minimum pressure, last start and last stop.
  - Hour counter:
    - display of on/off times, operation, load, maintenance times.
  - Events storing:
    - alarm and fault recording with indication of which alarm was activated, hour of the alarm activation and machine status.

The device allows the following:

- Multilingual user interface.
- Start/stop weekly and hourly programming.
- Immediate reading on the display of compressor operational data:
  - Compressor on/off, operation and load hours
  - Line pressure and oil chamber pressure
  - Air outlet temperature and compressor oil temperature
- Programming of basic parameters (accessible by the user) for optimal compressor operation:
  - Compressor control mode: local, network (master/slave)
  - Operating mode (continuous, automatic, modulation)
  - Pressure checking (locally with pressure probe and externally by pressure switch)
  - Setting of maximum and minimum operating pressures
  - Setting of off load operating time
  - Setting of separator element change and oil change times.
- Password protected Advanced programming to insure only qualified technicians are able to change the parameters.
- Status check of controller/machine inputs and outputs to detect possible failures in the compressor electrical system and/ or in the safety and protection devices.
- Storing of up to 20 fault events.
- Storing of up to 20 last program modifications.
- Remote control for machine starting and stopping.
- Remote control, through volt free contacts, of the following machine states:
  - Compressor allowed to operate (Optional)
  - Operating compressor (Optional)
  - Compressor on load (Optional)
  - Tripped compressor. (Standard)

Note

MAESTRO^{XS} can be connected to a Mattei SuperVisor device (Optional) to allow:

- The remote monitoring through web interface.
- To signal alarms through e-mail, fax or mobile phone.

STANDARD EQUIPMENT

The compressor is supplied complete and includes:
intake air filter - air pressure gauge - minimum pressure/non return valve - safety relief valve - thermostatic valve - oil filter - oil level indicator - initial charge of Mattei Rotoroil 8000 F2 synthetic lubricant.

SOUNDPROOFING CANOPY

All components described are in a metal soundproofing enclosure. The enclosure is epoxy powder painted, lined internally with fire resistant sound abating material.

The enclosure has a pre-filter to prevent intake of large particles that could clog the radiators and the air filter.

Detachable hinged doors and panels allow easy access for the routine maintenance.

The base has openings to allow easy handling.

INSTALLATION

The compressor is supplied ready-to-use and needs no foundations.
Once placed in position, only the electrical connections and air connections have to be arranged. The electric supply should be: 3 phases + ground.
The disconnect switch and the protecting fuses are not included in the supply.
The compressor must be placed in a well ventilated area away from any heat source and the air should not contain flammable gases or solvents that could be drawn in by the compressor or the motor. In case of doubts, please contact our Technical department. If the compressor is installed in the open, a roof or other suitable covering must protect the equipment from atmospheric agents.

OPTIONAL EQUIPMENT

The compressor can be customized by purchasing specific accessories:

- **Condensate drain and separator kit** code IF54A34421 is installed externally to the soundproofing enclosure. It provides separation and draining of the condensate from the after cooler.
- **High efficiency intake filter kit** code IF54A43341 is installed in place of the standard filter. It can remove particles equal to or larger than 3 micron with a filtering efficiency 99%.
- **Heat recovery kit** code IF52A43339 to heat water for process and sanitary purposes. The kit is composed of a water/oil plate exchanger, a thermostatic valve and connecting pipes. It can be supplied already installed on compressor or as a separate component for remote operation.
- **Oil-water separator kit** code IF54A43340 installed inside the soundproofing enclosure to ensure separation of oil from the condensate water It requires the installation of the condensate drain and separator kit code IF54A34421.

PACKING
Standard packing includes: wooden shipping pallet, a polythene cover and a cardboard box.

DOCUMENTATION
The compressor is supplied complete with:
no. 1 Operating and maintenance instructions complying with Machines Directive 98/37 CE
no. 1 EC declaration of conformity
no. 1 Commissioning report
no. 1 Certificate of Conformity
no. 1 Maintenance schedule
no. 1 Wiring diagram (inside the Electric Panel)

CERTIFICATIONS
Ing. Enea Mattei S.p.A. has been certified by DNV with the Quality System Certificate, conforming to UNI EN ISO 9001 standard.

COMPANY
WITH QUALITY MANAGEMENT
SYSTEM CERTIFIED BY DNV
=ISO 9001 : 2000=

mattei BEST SOLUTIONS IN COMPRESSED AIR	DESIGN DATA	rev	B
	1000 Series	data	Sep-09
		Compiled by	MRB/WK
		Approved by	

SERIES			**AC 15 / AC 15 Plus**		
VERSION			LX	HX	
Airend Nominal Pressure psi (g)			110	140	
PERFORMANCE					
		psi (g)			
Free air delivery **(1)**	**CFM (F.A.D.)**	100	106.5	95.7	
Terminal power (2)	**[kW]**		20.1	19.0	
	CFM (F.A.D.)	105	106.2	20.2	
	[kW]		20.6	19.5	
	CFM (F.A.D.)	110	106.0	95.2	
	[kW]		21.1	19.9	
	CFM (F.A.D.)	115	-	95.0	
	[kW]		-	20.4	
	CFM (F.A.D.)	120	-	94.8	
	[kW]		-	20.8	
	CFM (F.A.D.)	125	-	94.0	
	[kW]		-	21.2	
	CFM (F.A.D.)	130	-	94.4	
	[kW]		-	21.6	
	CFM (F.A.D.)	135	-	94.2	
	[kW]		-	22.0	
	CFM (F.A.D.)	140	-	94.0	
	[kW]		-	22.4	
	CFM (F.A.D.)	145	-	-	
	[kW]		-	-	
Off load power		[kW]	4.7	3.9	
Sound pressure level **(3) (6)**		[dB(A)]	69		
REFERENCE CONDITIONS					
Intake pressure		[psi(a)]	14.5		
Intake temperature		[°F]	68		
Relative humidity		%	0		
Nominal motor speed		rpm	1,800		
ELECTRICAL CHARACTERISTICS					
Motor rated power		[hp] / [kW]	20 / 15		
Voltage **(4)** *- Frequency*		[V/Hz]	230/60 or 460/60		
Enclosure-Insulation class			IP55-F		
Electric starting			Star delta		
Fan rated power **(6)**		[hp]	--		
Fan rated efficiency			n/a		
Auxiliary circuit voltage		[V]	110		
Supply min wire section		[AWG]	7 (x 33 ft)		
TYPE OF INTAKE CONTROL REGULATION					
Modulation			intake proportional valve		
On load, off load and stop			pressure control		
On load, off load			pressure control		
INTEGRATED DRYER (Only Plus)					
Absorbed power		[hp]	1.9		
Refrigerant			R 404 A		
Nominal dew point		[°F]	38		
TECHNICAL DATA					
Min-max allowed ambient temperature		[°F]	+34 / +104		
Outlet air temperature **(5)**			-		
AC version	AC Plus Version	[°F]	≤ 86 / 68		
Min-max oil temperature		[°F]	176÷230		
Cooling air flow rate **(6)**		[cfm]	163		
Fan residual head **(6)**		[Pa]	20		
Total recoverable heat		%	~ 95		
Oil system capacity		[gallon]	2.6		
Oil carry over		[ppm]	≤ 3		
Air outlet size			Rp 1"		
Condensate drain outlet size					
PLUS VERSION			2 X Rp ¼"		
With condensate sep. KIT **(7)**			ϕ 10		
Water inlet-outlet size			-		
With heat recovery KIT **(7)**			2 x Rp ¾"		
LxWxH	AC / AC Plus	[inch]	60 x 32 x 48		
Weight with oil	AC / AC Plus	[lb]	982	1,070	

(1)= According to ISO 1217: 1996 (annex "C")
(2)= Without dryer power (only Plus version)
(3)=According to PN8NTC2.3 measured at 1m distance
(4)= According to IEC 38
(5)= According to reference conditions indicated
(6)= Frequency 60 Hz
(7)= Optional

A TERMINI DI LEGGE LA "ING. ENEA MATTEI S.p.A." SI RISERVA LA PROPRIETA' DEL PRESENTE DISEGNO E NE VIETA L'UTILIZZAZIONE E LA RIPRODUZIONE O LA COMUNICAZIONE A TERZI SENZA IL PROPRIO BENESTARE.
THIS DRAWING CONTAINS PROPRIETARY DATA BELONGING TO "ING. ENEA MATTEI S.p.A." ANY RIPRODUCTION, UTILIZATION, EXIBIT OR LENDING IS NOT ALLOWED, WITHOUT PRIOR WRITTEN CONSENT.

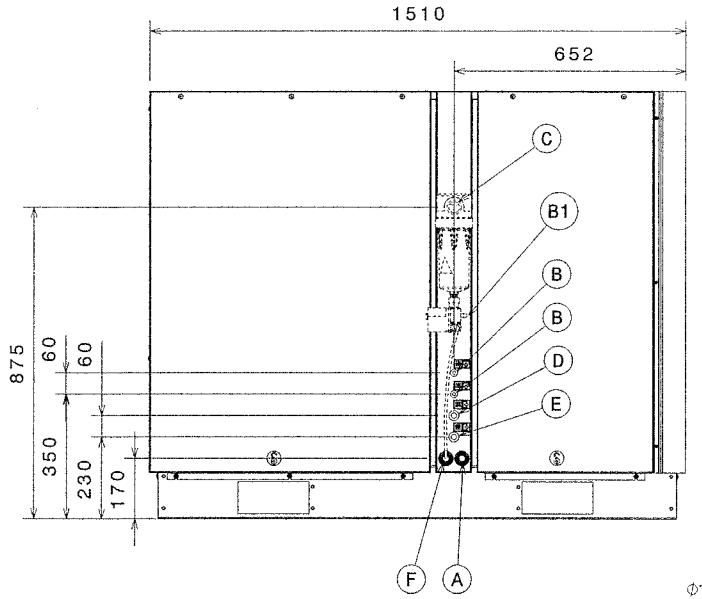

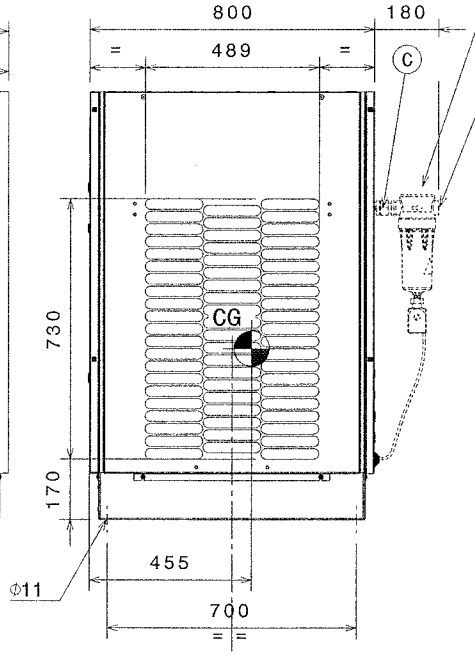

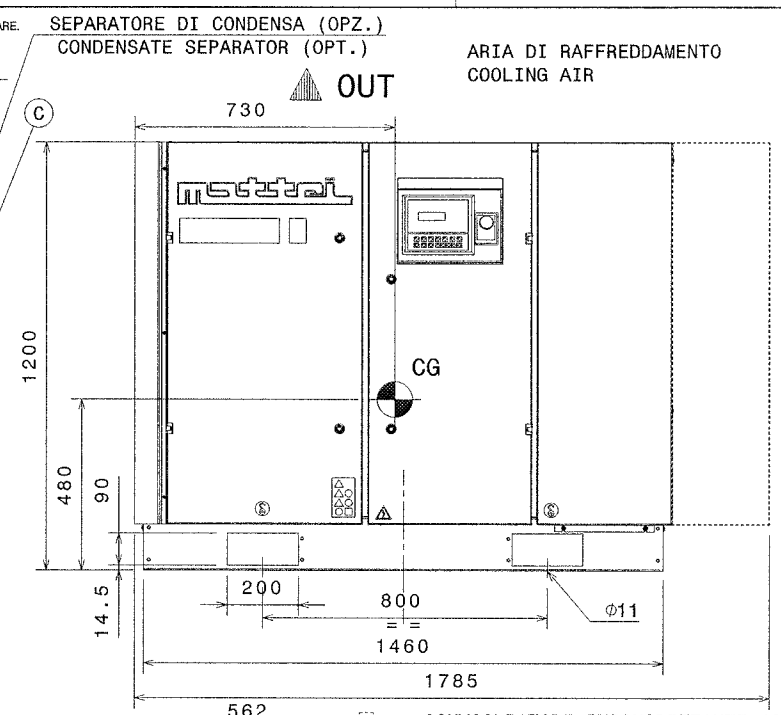

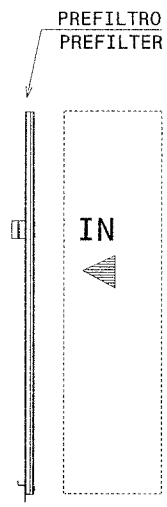

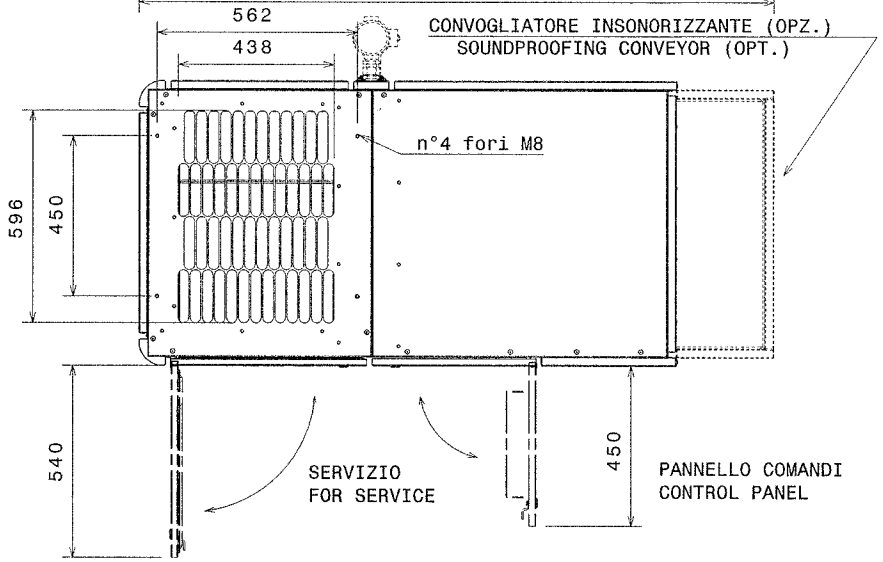

1) VERSIONE "PLUS" / "PLUS" VERSION — 2 x Rp 1/4

2) CON SEPARATORE DI CONDENSA / WITH CONDENSATE SEPARATOR — Φ10

3) CON KIT RECUPERO CALORE (OPZIONALE) / WITH HEAT RECOVERY KIT (OPTIONAL) — 2 x Rp 1/2

ITEM	CONNECTION	SIZE		
A	INGRESSO LINEA / EL.SUPPLY	Φ31 MAX	AC 15 H-L-HH	445
			= = PLUS	485
B 1)	SCARICO CONDENSA / CONDENSATE DRAIN	---	AC 18 H-L-HH	445
			= = PLUS	485
B1 2)	SCARICO CONDENSA / CONDENSATE DRAIN	Φ10	AC 22 H-L-HH	450
			= = PLUS	490
C	USCITA ARIA / AIR OUTLET	Rp 1	SUPERFICIE DI CARICO / LOADING AREA m2	~0,211
D 3)	ENTRATA ACQUA / WATER INLET	---		
E 3)	USCITA ACQUA / WATER OUTLET	---	CARICO SULLE FONDAZIONI / FLOOR LOAD max N/cm2	~2,1
F	FORO SUPPLEMENTARE / SUPPLEMENTARY HOLE	Φ31 MAX		
CG	CENTRO DI GRAVITA' / CENTER OF GRAVITY			

Massa Kg / Mass (con olio) (with oil)

DIMENSIONI PRINCIPALI-GENERAL ARRANGEMENT

DATA / date	10.2005	TITOLO / title: AC 15-18-22 H-L-HH-plus	REV. B
DISEGN. / drawn	TB	BEST SOLUTION IN COMPRESSED AIR	
APPROV. / approved	G.F.	ING. ENEA MATTEI S.p.A.	SCALA / scale: / — NO. DISEGNO / dwg.no. 34428 — FOGLIO / sheet 1/1

MATTEI A3 1

AIR COMPRESSORS

800

Serie AC 1000

801a

INSTRUCTION, USE, AND MAINTENANCE MANUAL

TIEG4G-209

Translation of the original instructions in Italian

ING. ENEA MATTEI SpA
Strada Padana Superiore 307 - 20090 VIMODRONE (MI)
Tel +39 - 02253051 (16 linee) - Fax +39 - 0225305243
E-Mail: info@mattei.it - www.matteiaircompressors.com

801a

Versions

- **AC 15** (Plus)
- **AC 18** (Plus)
- **AC 22** (Plus)
- **AC 30s** (Plus)

Voltages/Frequencies

- V 230/50 - 400/50 Hz
- V 230/60 - 460/60 Hz

The present manual, written in English, is the official translation of the manual in **Italian**, chosen as reference language by Ing. ENEA MATTEI SpA.
The paper copy will be available for over 10 years after end of production of the machine to which it refers.

The content of this document cannot be used, reproduced or disclosed to third parties without the explicit written consent of **Ing. ENEA MATTEI S.p.A.**

Ing. ENEA MATTEI S.p.A. reserves the right to modify the characteristics of the machine subject of this document without prior notice.

Copyright 2008 by **Ing. ENEA MATTEI S.p.A.**

This Instruction Manual meets all the requirements of Directive 2006/42/EC.
It is to be considered valid for both the machines with the CE Marking and those without it.

Important Note
This manual should always be used together with the "MAESTRO ^{XS} User's Manual", code TECA2G-007

General Information
- Symbols in the manual Page 1.01
- Purpose of Document Page 1.02
- Required Qualifications for Operators Page 1.03
- Identification data of the Manufacturer and the Machine and the location of the nameplate “CE MARKING” Page 1.04
- General Delivery Notes - Final inspection - General Safety Warnings Page 1.05
- Settings at the Customer’s expense Page 1.09
- Instructions on how to request interventions - Instructions on how to order spare parts - The manufacturer’s address Page 1.10

General Information - SAFETY
- Dangers and residual risks and General Information Page 2.01
- Responsibilities Page 2.04
- Description of Pictograms Page 2.05

Description of Machine
- General Description of Machine Page 3.01
- Technical Data and Overall Dimensions Page 3.08

Transportation and handling Page 4.01

Installation
- Position of compressor Page 4.02
- Electrical connection Page 4.03
- Connection to the air network Page 4.04
- Dimensions of compressed air distribution piping Page 4.05
- Heat recovery Page 4.06

Safety Devices Page 5.01

Commands and control Page 5.02

Use of compressor
- Foreword Page 6.01
- Operation modes Page 6.02
- Basic Programming Menu Page 6.04
- Operational Failures Page 6.05
- Start - Stop Page 6.06

Maintenance Page 7.01
- Réguler Checksums Page 7.02
- Check of oil level - Cleaning and/or replacing the air suction filter - Cleaning the oil/air radiator Page 7.03
- Cleaning the pre-filters- Cleaning and/or replacing the oil return valves Page 7.04
- Replacing the oil filter Page 7.05
- Replacing the oil/air separator elements Page 7.06
- Oil change Page 7.08

Lubricants Page 8.01

Troubleshooting Page 9.01

The electrical motor Page 10.01

Storage - Decommissioning and dismantling Page 11.01

Condensate discharge in optional kit Page 12.01

Attachments:

Form to request Technical Service

Form to request spare parts

Parts to be replaced during maintenance

“Technical Data” Sheets

Symbols in the manual

In this manual some symbols are used that to attract the reader's attention and underline some particularly important aspects of the treatment.

The table below gives the list and describes the meaning of the different symbols used.

SYMBOL	MEANING and NOTES
098 ⚠	**Danger** It indicates a danger with the risk for accident, even fatal, for the user. Pay careful attention to text block with this symbol.
!	**Warning** It warns against a possible deterioration of the machine or personal item of the user.
☞	**Notice** It shows either a notice or a note on the key functions or useful information.
ⓘ	**Further information** This symbol introduces text blocks containing further information. This information has no direct relationship with the description of a function or with procedure development. They could be cross-references to other documents or other sections of this manual.
🛠	**Damage risk** It indicates a high damage risk of a piece, for example, using a wrong tool or by mounting something with the incorrect procedure.
👁	**Visual Check** It recommends the reader to carry out a visual check. This symbol can also be found in the instructions for use. The user is required to read a measure value, to check some warning signs, etc.
👂	**Acoustic Check** It recommends the reader to carry out a sound acoustic check. This symbol can also be found in the instructions for use. The user is required to listen to an operational noise.

Purpose of Document

This manual contains the technical characteristics, the performance, the transportation and installation rules, the instructions for use, and the preventive and corrective maintenance operations of the machine manufactured by **Ing. ENEA MATTEI** S.p.A.

☞ **NOTE : This manual should be considered an integral part of the machine, and should stay with it during the entire life span of the equipment.**
Keep this manual and all of the attached documents in a place easily accessible to all staff in charge of the control or the maintenance of the machine.
Ing. ENEA MATTEI S.p.A. reserves the right to subject the supply of further copies to the repayment of charges and the acceptance of special provisions with respect to the legitimate defense of intellectual, patent, and executive identity and functional property of the product and/or its parts.
It is understood that forwarding all or part of this manual to third parties is not tolerated unless with the prior written consent of Ing. ENEA MATTEI S.p.A. for both the text, the illustrations and the diagrams attached.
Ing. ENEA MATTEI S.p.A. reserves the right to make changes without prior notice. Any change, supplement or suppression of elements, components, functions or cycles of the machine, not previously agreed upon with Ing. ENEA MATTEI S.p.A. releases the manufacturer from any responsibility whatsoever.

This manual is for the user and the service engineer of the machine, and it aims at supplying them with the basic technical data typical of the system, a technical description of the several operating groups that form it as well as the essential use procedures and the information necessary to perform preventive and corrective maintenance.

This manual is for staff with a sound knowledge of the processing technique, of mechanical and electrical diagrams, and is for both those in charge for the use of the machine and the service engineers.

This manual is an integral part of the machine and contains information that aims at granting all staff safe working conditions and guaranteeing perfect efficiency during the life span of the machine.

For a correct use of the machine, it is assumed that the working environment is adequate to current regulations concerning safety and hygiene.

Directives and Technical Standards Applied

The machine has been designed, made, and inspected in compliance with the “safety and health essential requirements” stated in attachment I to the **European Directive 2006/42/EC**.

The list below gives the reference Standards used by **Ing. ENEA MATTEI** S.p.A. to design, make, and to make the final inspection of the machine.

List of Directives and Technical Harmonized Standards

MACHINERY DIRECTIVE 2006/42/EC
ELECTROMAGNETIC COMPATIBILITY (EMC) DIRECTIVE 2004/108/EC
LOW VOLTAGE DIRECTIVE 2006/95/EC
EN 1012-1 Compressors and vacuum pumps – Safety Requirements - Compressors.

Required Qualifications for Operators

The operator in charge of the operation or the maintenance of the machine should have all the professional requirements specific to each foreseen operation.
The operator should be trained and aware of his responsibilities.
Below is the description of the professional profiles concerning the operators in charge of the machine

099

Entry Level Machine Operator (Qualification 1)
Qualified staff able to carry out simple tasks, i.e. to operate the machine with the use of controls on the push-button, and to carry out typical simple functions of adjustments, start or stop.

100

Second Level Machine Operator (Qualification 2)
Qualified staff able to carry out the task of qualification 1 and also to operate the machine with disconnected safety protections to perform specific adjustments, start or stop functions.

☞ ***Important***
This qualification includes those responsibilities typically subdivided into two separate qualifications. For the operator in charge of our machines, a specialization course is held to train the operator to be able to perform all of the actions necessary to operate the machine even with some of the protections disconnected. However, this requires a certain competence by the operator and extreme care by the manager of the factory so that the said operator carries out only the established operations.

101

Mechanical Service Engineer
A qualified engineer able to operate the machine under normal conditions, to operate it with disconnected protections, to intervene on mechanical parts to carry out all adjustments, carry out maintenance and all of the necessary repairs.
This person is not empowered to carry out interventions on electrical systems with live voltage.

102

Electrical Service Engineer
A qualified engineer able to operate the machine under normal conditions, to operate it with disconnected protections. He/she is in charge of all electrical adjustments, maintenance and repair.
He/she is able to operate with live voltage inside cabins and shunt boxes.

103 A 104

The Manufacturer's Engineer
qualified engineer from the manufacturer to perform complex operations in special situations or according to that which has been agreed upon with the user.

Identification data of the Manufacturer and the Machine and the location of the nameplate "CE MARKING"

Ing. ENEA MATTEI S.p.A. is identified as the machine's manufacturer in conformity with the laws in force with the following acts:

- Declaration of conformity - CE Marking – Instruction Manual

305

A specific plate on the machine gives the following indelible information on the **CE MARKING**:

Model
Code
Serial number
Year of manufacture
Delivery
Pressure
Power
Number of runs
Dryer
Tank Capacity
Total Weight
Name and address of manufacturer

The "CE MARKING" plate has been applied at the base of the machine.

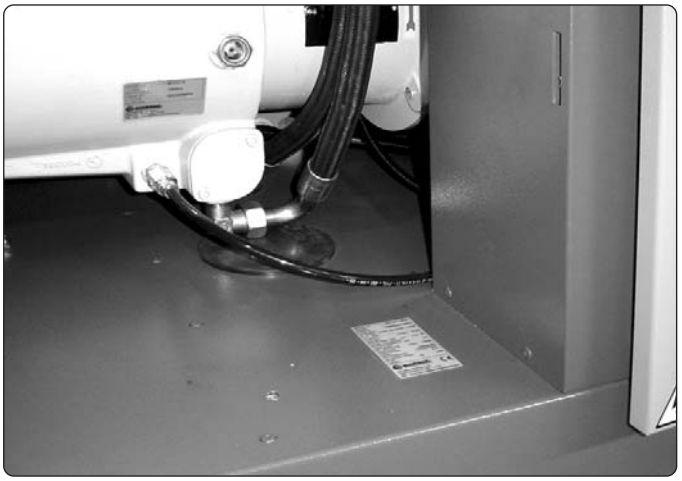

803

The relevant "**DECLARATION OF CONFORMITY**" has been attached.

It is forbidden to remove the "**CE MARKING**" plate and/or exchange it for other plates of machines of the same model supplied to the Customer or the operator.

Should the "**CE MARKING**" plate be accidentally damaged or removed from machine, the customer is required to inform the Company.

General notes on delivery

Upon receipt of the machine please check that:
The supply complies with the order speci cation.
There are no damages due to transportation or other reasons.
(In the event of damage or missing parts, please inform immediately and in detail the forwarding agent or **Ing. ENEA MATTEI S.p.A.**)

ALWAYS STATE THE MACHINE SERIAL NUMBER AS WELL AS THE PRINT NUMBER OF THIS CATALOGUE WHEN MAKING ANY REQUEST TO Ing. ENEA MATTEI S.p.A. OR ONE OF THEIR SERVICE CENTRES.

Final inspection

The manufacturer carries out the nal inspection of the machine directly, during the production phases, in compliance with the company quality system.
Ing. ENEA MATTEI S.p.A. is responsible for the machine under its original con guration.
Ing. ENEA MATTEI S.p.A. refuses any responsibility for improper use of the machine, for damages due to operations which are not described in this manual or unreasonable jobs.

Safety precautions

The nal user should comply with the instructions given by the seller, concerning:

- safety devices already installed on the machine
- instructions for correct machine installation
- correct use and periodic maintenance of all the machine components, including safety devices
- regulations of current laws

The following safety precautions de ne both the behaviour and obligations to be observed when carrying out the activities listed in the manual, the instructions for the machine use and the way how to operate under safety conditions, for the staff and the surrounding environment.

Machinary Directive
Machinary Directive means the DIRECTIVE OF THE EUROPEAN COMMUNITY COUNCIL 89/392/EC dated 14th June 1989 and its subsequent amendments that modify its content 91/368/EC dated 20th June 1991, 93/44/EC dated 14th June 1993 and 93/68/EC dated 22nd July 1993.
In June 1998 the Machinary Directive and its subsequent amendments were included into Directive 2006/42/EC without modi cations.

Machine
Machine means the functional assembly composed of: control unit, processing unit, working and resting equipment, systems (electrical, pneumatic, hydraulic, cooling, lubrication systems) and any group completing the system functionality.

Working area
Working area means the protected volume limited by guards to prevent injuries and aimed at operation during the machine processing.

Authorized staff
Authorized staff means personnel duly trained and appointed to perform the activities listed below and that make up the operating instructions for the machine.

Appointed staff
Appointed staff means the personnel who, although not participating materially in the work, supervise the work of others, for example the responsible engineer.

Transport
Transport means all those operations regarding the handling of the machinery or part of it

Installation
Installation means the mechanical, electrical and uid system integration of the machine into a production reality, in compliance with speci ed requirements.

Commissioning
Commissioning means the functional check of the machine installed.

Operation
Operation means the operating mode at which the machine produces compressed air according to all settings and controls inserted by the control device.

Decommissioning
Decommissioning means to disconnect mechanically and electrically the machine from a production line.

Dismantling
Dismantling means dismantling and eliminating the machine components.

Maintenance and repair
Maintenance and repair means the regular check and/or replacement of parts or components of the machine and any action to identify the cause of failure, ending with the machine resetting to the design operating conditions.

Improper use
Improper use means using the machine out of the limits speci ed in the technical documentation.

Applicability
The regulations should be applied when performing following activities:
- Transport, installation and setting up
- Manual operation
- Continuous operation
- Decommissioning and dismantling
- Maintenance and repair

that compose the use procedures foreseen for the machine.

Installation and commissioning

“The installation and commissioning are only permitted to authorised staff.
During installation, handle the machine components as indicated in this manual; if lifting is necessary, verify rst the correct xing of speci c devices for lifting and use adequate slings and equipment.
The machine installation should be as free as possible from any material preventing or limiting its view.
If there are any, remove xing brackets or eyebolt blocking devices, previously tted to allow the transport.
Check that all the machine safety devices are correctly xed and there are no moving or loose parts. Also check soundness of the control unit components.
Connect the machine pneumatic system to the air distribution system and carefully check that pressure is set to the correct value.
Check consistency between the voltage set on power transformers and the voltage value of the electrical supply.
Before connecting the machine electrical system, check that the mains isolator is blocked in the open position.
Verify that accident preventing guards are correctly installed and in perfect state.

☞ **The machine safety is not guaranteed in case of removal, by-pass or tampering of the safety devices on the machine.**

To stop the machine during an emergency, press the emergency stop button.

Operating the machine

Only authorised and duly trained staff or at least with a suf cient technical experience should operate the machine. The staff in charge of operating the system should be aware that the knowledge and application of safety regulations is in an integral part of their job.
Unskilled personnel should not access the operating area and the machine control panel when the system is live.

Before starting the machine, carry out following operations:

• Carefully read the technical documentation;
• Get information about the operation and position of emergency stop devices on the machine;
• Know which protections and safety devices are tted on the machine, their position and operation.

It is forbidden to either disconnect or partially remove the protections and safety devices. The same applies for danger signals located in particular areas of the machine. It is strictly forbidden to access the working area and the control and power cabins during operation of the equipment (even partial) or immediately after it is switched off.
Protections and safety devices should be kept in perfect state so as to allow right operation; in case of failure they should be repaired or replaced.
The use of not authorised components and accessories for the protections and safety devices may lead to malfunctioning and dangerous situations for the operating staff.

Decommissioning and dismantling
Only authorised staff is allowed to decommission and remove the machine.
Before setting the machine out of operation it is necessary to disconnect the mains isolator and block it in the open position.
Discharge oils and uids, remove all moving parts.
Disconnect the mains isolator cable, by cutting out the power wires and then the earth wire.
Disconnect the power supply cable from the machine main switch and remove it.
Disconnect the machine pneumatic equipment from the air distribution system.
Remove the machine from the working area following the instructions given in this manual. Before lifting it, verify the correct use of lifting devices and use only suitable equipment.

Waste disposal should be performed in compliance with the laws in force in the country where the machine is installed.

- ❑ Installation, setting up and use of compressor should be carried out in compliance with the standards and the rules in force concerning safety at work.
- ❑ The owner of the machine is responsible for its good maintenance, an essential condition to ensure safe operation.
  Those machine parts that due to improper use or wear do not ensure safe operation should be quickly replaced.
- ❑ Only trained, authorised and skilled staff should perform the installation, use, maintenance and repairs.
- ❑ In case of difference between the instructions given in this manual and those foreseen by current laws concerning safety, it is recommended to apply the more restrictive ones.

Maintenance and repair
Only authorised personnel should carry out maintenance, troubleshooting and repairs.
Any maintenance and repair in progress should be signalled by a speci c sign, stating the maintenance condition and placed on the control panel until completion of the job, even if temporarily interrupted.

All operations for installation, maintenance or replacement of components on the machine or on the control unit should be performed with switched off system.
Therefore, the main switch should be on OFF (OPEN) position and blocked with the safety lock to prevent any movement to the ON position.

For compressors equipped with INVERTER, before performing any maintenance job, wait at least
5 minutes after you have disconnected the electricity supply.

Before acting, people in charge of maintenance should rst check following conditions:
• that any receiver under pressure has been exhausted.

Before intervening on pneumatic or lubricating systems and speci cally on pipes, receivers, hoses and other components under pressure, the staff in charge of maintenance should reduce the internal pressure of the plant down to the ambient pressure value.
Faulty components must be replaced with others having the same code.

If during troubleshooting it is necessary to carry out jobs with the control unit and the machine live, all precautions should be taken, as required by the safety standards to operate under dangerous voltages and with moving parts.
At the end of the maintenance and troubleshooting jobs, all disconnected safety devices should be reset.
Maintenance, repair and troubleshooting should be ended by the checking of the machine operation and of all its safety devices.

Settings to be made by customer

Unless different contractual agreements are taken, the following items are normally at customer's expense:

- ❑ room preparation (including building works, such as foundations or canalizations, etc, if required);
- ❑ anti-slip, levelled ooring;
- ❑ observing the dimensions given in the layout drawing when preparing the site and when installing the machine itself;
- ❑ preparation of auxiliary services, suitable for the system requirements (such as electricity supply, pneumatic system, etc)
- ❑ preparation of the electrical equipment conforming to 2006/95/EC Directive;
- ❑ adequate lighting complying with EN 60204-1 Standard;
- ❑ any safety devices upstream and downstream of the electrical supply lines (like differential switches, earthing systems, safety valves, etc) foreseen by the current laws in the country of installation;
- ❑ earthing equipment complying with CEI 64-8 Standard;

801a

For any kind of information on the use, maintenance, installation, etc. **Ing. ENEA MATTEI S.p.A.** is always available to meet the Purchaser's requests.

However, any enquiry should be made in clear terms, with references to this manual and always stating the data on the machine id plate.

For any communication with the service centre, always indicate the machine model, the serial number and year of manufacture, helping to identify every single machine and, when possible, specify the kind of problem or the defect found, for instance: electrical, mechanical fault or defects in the machining quality, and describe the same in the "**TECHNICAL SERVICE REQUEST FORM**" enclosed to this manual.

Please contact the nearest local service department, or refer to the headquarters in Italy.

Instructions on how to order spare parts

In the course of time a machine may need the replacement of those parts subject to wear.
The Purchaser may order the parts to be replaced.
It is compulsory to always buy original spare parts.

To order spare parts always indicate following data with the utmost accuracy:

1. Machine type and model
2. Serial number
3. Exact description of the item
4. Code and/or reference (if available)
5. Quantity

To simplify and speed up the delivery of spare parts, it is suggested to forward orders by compiling the "**SPARE PARTS REQUEST FORM**" enclosed with this manual and send it to **M.T.A. S.p.A.** or to the closest distributor.

The manufacturer's address

Any request for intervention of the technical service by the customer or explanations on technical aspects of this document should be made to:

Technical and Spare Parts Service

075 M.T.A. S.P.A. MECCANICA TECNICA ASSISTENZA

Corso Italia, 47 – 24049 VERDELLO - ZINGONIA (Bergamo) - Italy
TEL: +39 - 035/4186400 (Automatic search) FAX: +39 - 035/4186490
e-mail: info@mta.bg.it
C.P. N° 69 Zingonia

098

To operate the machine under any operating condition, including maintenance, it is not necessary that more than one person be present.
Using more than one person is superfluous and, in any case, not allowed for safety reasons.

!

The employer should instruct the staff on the risks of accidents, on safety devices and on the general rules concerning prevention and protection, as established by the European Community Directives and by the current legislation in the country where the machine is installed.
The operator should be aware of the location and operation of all controls and of all the machine features.
The operator should also have read the entire manual.
Only skilled engineers should carry out maintenance jobs, after having duly prepared the machine.

098

Any unauthorized tampering or replacement of one or more parts of the machine, or the adoption of accessories that modify the use of the machine and the use of different materials than those recommended in this manual, may be a potential risk of accidents.
It is strictly forbidden for the machine to be operated by two persons contemporaneously, one inside the guards and one on the control panel.

Dangers and residual risks

During the design phase all hazardous areas have been considered and, therefore, all necessary precautions have been taken to avoid risks to people and damage to the machine components.
To guarantee both health and safety of those exposed, the machine is equipped with appropriate safety devices:

- EMERGENCY button to stop the machine immediately
- Fixed protections. located in areas with exclusive access for routine maintenance. They are xed by devices that need special tools for their removal, or they are locked with screws.
- Protection and segregation of the electrical/electronic driving equipment of the machine by metallic box, to avoid accidental contacts with live equipment in case the metallic box is open; the electric box is IP 54 protected; IP 20 is the protection degree of the internal devices against accidental contact.
- Suitable panels or protection to cover moving parts.
- Electrical devices to detect faults of the machine electrical supply and malfunction of motor electrical devices.

098

WARNING !!!
For compressors equipped with INVERTER, before performing any maintenance job, wait at least 5 minutes after you have disconnected the electricity supply.

098

WARNING !!!
Our machine IS NOT SUITABLE for use in areas with potentially explosive atmosphere.

After having carefully considered all possible risks concerning the use and maintenance of the machine, all measures have been adopted to eliminate risks and limit dangers to exposed people.
Although the machine is equipped with safety devices, the following residual risks remain, which can be eliminated or reduced by the relevant precaution:
• Risk of bruises, tearing, cuts during the handling of tools and/or elements.
• Risk of bruises during machine intervention.

Operation

- ❑ **The operator should use the personal protection devices.**
- ❑ Use the compressor only for the kind of application for which it is designed (air compression for industrial use).
- ❑ Before starting, ensure that compressor is lled with oil.
- ❑ Please refer to Section 8 of this manual for the oil type to be used.
- ❑ Never operate the compressor if there is a possibility of inhaling smoke or toxic or ammable vapours.
- ❑ Never operate the compressor at higher pressures than those indicated in the id plate.
  The air delivered by the compressor must not be used for breathing, although it is filtered and purified from oil.
- ❑ If hoses are used to distribute the air, ensure they are properly sized and suitable for the operating pressure, and not damaged or worn.
  Please remember that rubber hoses should be replaced at regular intervals.
- ❑ Never remove the oil ller plug when the machine is running or there is still pressure inside the compressor: there would be hot oil leak.
- ❑ Although it has an acceptable sound pressure level, the machine can produce a much higher noise if the room is narrow and reverberating. Please note that the continuous presence of an operator is unnecessary.
  For safey against noise, in compliance with local laws in force, and if necessary, place speci c warning signs near the machine and equip personnel with suitable protections.

Installation

Besides fulfilment of rules and regulations issued by the authorities, it is recommended to consider the following:

- ❑ The compressor will perform most ef ciently if installed in a suitable, well ventilated area and far from heat sources.
- ❑ Should any duct be installed for the suction and cooling of air, always use the data and recommendations given in Section 4 and preferably obtain expert advice during the design stage.
- ❑ In case of outdoor installation (not suggested for very cold climates) it is necessary to place the machine under a roof or covering, to protect it against weather.
- ❑ Be careful that no foreign materials clogg the radiator and cause rises of the operating temperature.
- ❑ The intake air must be clean and free from ammable vapours, which could cause res or explosions.
- ❑ As the machine is air cooled, except for machines supplied with the “Heat recovery” kit, adequate ventilation must be ensured to prevent it from overheating and thus avoiding the recirculation of the expelled hot air.
- ❑ Control and safety devices should never be tampered with.
- ❑ If one or more compressors are installed on a single pneumatic line, it is essential that each unit is equipped with a detect valve.
- ❑ Electrical connection should be conforming to current regulations. The machines should be earth connected and protected by a magneto-thermal switch against possible short circuits.
- ❑ It is essential to install a mains isolating switch upstream of the compressor.

Maintenance

The person responsible for operation of the compressor should check periodically that all instructions for operation and maintenance are followed by the operator.

098

WARNING !!!
Fill in the specific "Maintenance Sheet" supplied with the machine.

Only trained staff should carry out maintenance, with the compressor off and with no pressure inside the same. Also disconnect the compressor from the pneumatic equipment.
Cut out the electricity supply by acting on the mains isolator located upstream of the compressor electric board and indicate with a special sign that the machine MUST NOT BE RESTARTED.

098

WARNING !!!
An adequate cleaning of both the machine and the place where it is installed is highly recommended.
For cleaning DO NOT USE flammable fluids or products not complying with current regulations.
In case of doubts about the compressor operation or of any of its components, it is recommended to contact the after sales service of Ing. Enea Mattei S.p.A.

The following should be also considered:

- ❑ Before intervening on the machine, disconnect the electrical supply by means of the mains isolator.
  In fact, the machine is equipped with an automatic start system, starting the same at any time, if required by the compressed air system.
- ❑ The key for opening/closing the electric box doors should be given only to skilled personnel.
- ❑ Maintenance operations should be always carried out with compressor not operating.
- ❑ Before carrying out any job on the compressor unit, ensure through the gauge that there is no pressure inside.
- ❑ Only use suitable tools for the kind of job.
- ❑ Never use solvents and ammable products to clean the machine or individual parts.
- ❑ Never carry out weldings or other jobs requiring considerable heat near the machine, speci cally near the electrical system and the oil circuit.
- ❑ Do not make modi cations or weldings on vessels under pressure.
- ❑ Do not leave tools, rags or other loose items on the motor or on the compressor.
- ❑ The lubricating oil, especially if exhausted, may damage the skin: protect hands with gloves or speci c protecting products for the skin.
- ❑ Do not wear clothes contaminated by lubricating oil
- ❑ Absolutely avoid contaminating the ground with lubricating oil.
- ❑ To prevent pollution, store the exhausted lubricant into suitable containers and in a safe place. For oil disposal follow what suggested by internal rules and current regulations.
- ❑ In case of topping up, use the same oil as already contained in the machine.
  Mixtures are harmful for both the oil and the compressor life.
- ❑ After any maintenance, start the machine and check that all control, stop or alarm devices are working correctly; also verify that temperature and pressure values are the correct ones.
- ❑ Make checks and overhauls as foreseen in this Manual, and use only original spare parts.
  Failing to make checks or using non original spare parts may cause problems that jeopardize the machine operation and the manufacturer's warranty will be no longer valid.

Responsibilities

Ing. Enea MATTEI S.p.A. refuses any responsibility for injuries to people, animals or damages to objects, caused by:

- non-observance of the mentioned precautions;
- improper use of compressed air or of the machine in general;
- non-observance of normal safety regulations or domestic rules in the work eld;
- non-observance of the instructions during handling and transport of the machine;
- wrong machine installation;
- defects due to the electric power distribution;
- lacks in periodic maintenance;
- unauthorised jobs or modi cations;
- use of non original or unsuitable spare parts for the involved model;
- non-observance of the instructions, even if only partially;
- possible inef ciencies caused by malfunction or non-use of the compressor

098

WARNING !!!
It is recommended to use the compressed air delivered directly by compressors only for manufacturing processes. For any other use, please ALWAYS CONTACT the distributor, the technical service or the manufacturer BEFOREHAND.

801a

002

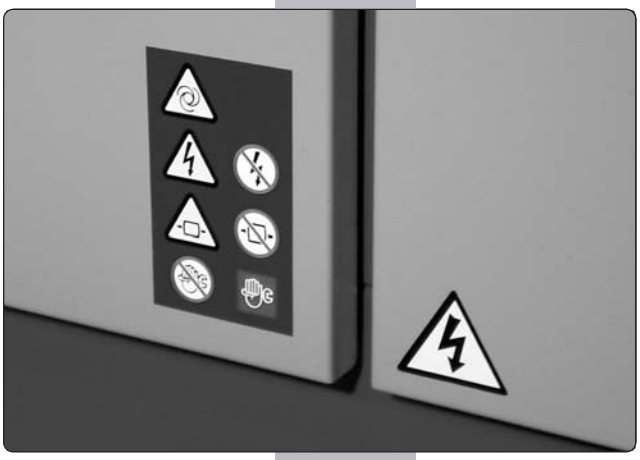

806

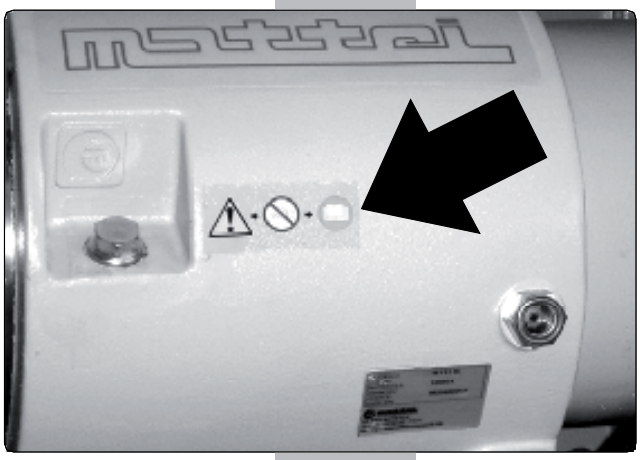

Description of Pictograms

Pictograms have been applied on the machine to explain following situations:

Danger
Obligation
Prohibition

Special indications (example: direction of rotation of the fan, etc)

Many accidents are often caused by the non-observance of the simplest safety rules or poor knowledge of the instructions given by the manufacturer.

To avoid possible danger situations, some of them are highlighted through special signs represented by suitable standardized symbols (pictograms).

Below is the list of the most common symbols applied to our machines:

Danger pictograms
These triangular signs are framed in black with a yellow background and the symbol is black.

105

Warning !
The machine is with remote control or with automatic system and may start without notice.

106

Warning !
Vessel under pressure.

107

Warning !
Risk of high temperature surface (> 70 °C)

108

Warning !
Air delivery.

109

Warning !
Risk of electrical shock.

Prohibition pictograms
These circular signs are framed in red, with white background and the symbol is black.

110

No working on the machine.

111

No pressure in the receiver.

112

No voltage.

003a

807

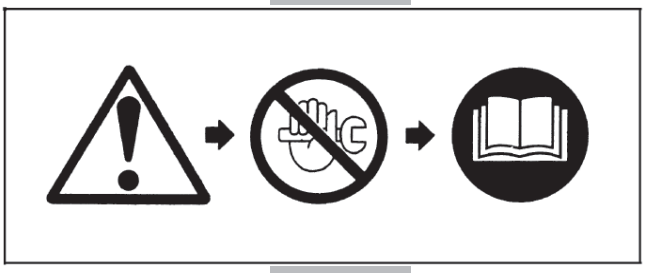

118

Description of Pictograms

Pictograms of Obligation
These are circular signs, on a blue background, and the symbol in white.

113 Read the instructions manual before carrying out any operation on the machine.

114 Use individual protective means against noise.

Pictograms of Indication
These signs may vary in shape and they give useful information.

115 Rotation direction.

116 Lifting point.

117 Possibility to carry out work.

Combination of pictograms
The above shown combination of pictograms means:
Warning ! Please refer to the Instruction Manual before starting any activity.

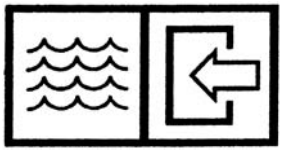

808 **Water inlet**

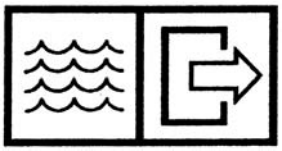

809 **Water outlet**

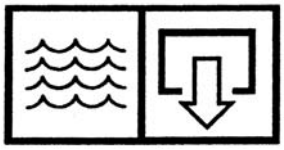

810 **Condensate drain**

Mattei rotary compressors of the AC Series are the result of years of investments in research and development, to improve performance continuously, and at the same be environment-friendly.
Designed for continuous industrial service, they guarantee constant performance over time, low energy consumptions, reliability, functionality and easy maintenance.
The compressor is supplied complete with all components described below and equipped with optional devices.
Unless differently required, the unit is lled with Mattei Rotoroil 8000 F2 synthetic lubricant.
For special requirements regarding lubricant, please refer to section 8 of this manual.

811a

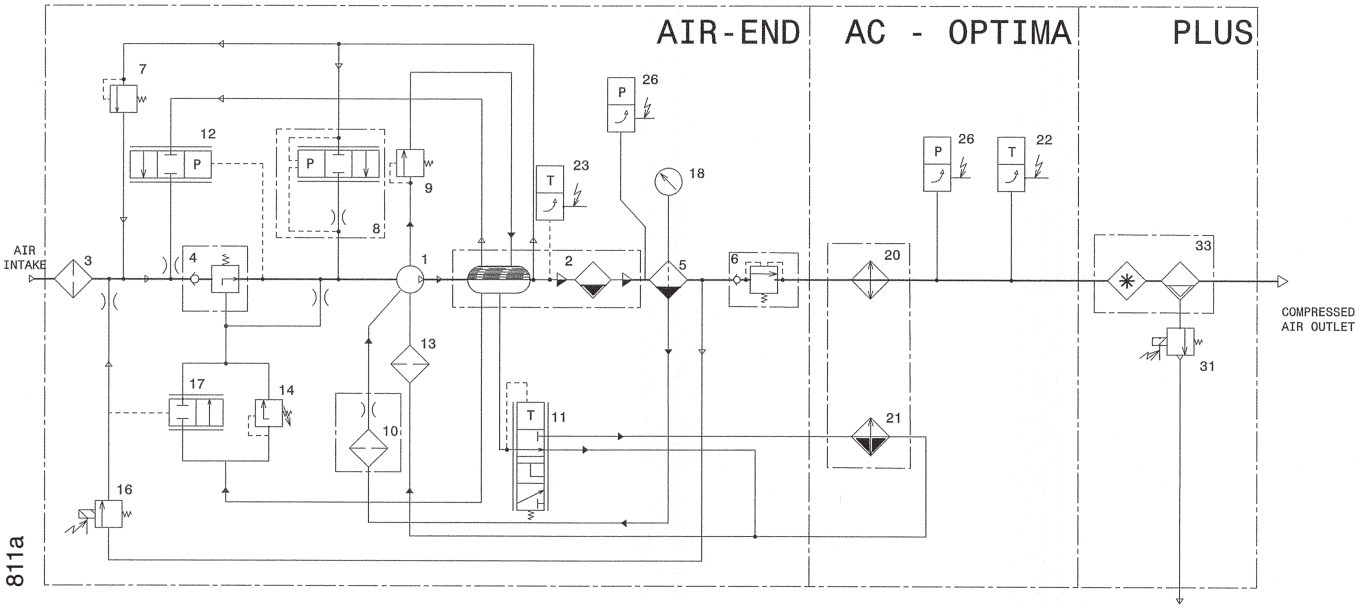

812a

1	COMPRESSORE ROTATIVO A PALETTE	1	ROTARY VANE COMPRESSOR
2	CAMERA OLIO - SEPARATORE PRIMARIO	2	OIL CHAMBER - PRIMARY SEPARATOR
3	FILTRO ASPIRAZIONE	3	INTAKE FILTER
4	VALVOLA ASPIRAZIONE	4	INTAKE VALVE
5	SEPARATORE ARIA - OLIO	5	AIR - OIL SEPARATOR
6	VALVOLA DI MINIMA PRESSIONE E NON RITORNO	6	MINIMUM PRESSURE - NON RETURN VALVE
7	VALVOLA DI SFIATO	7	RELIEF VALVE
8	VALVOLA DI SOCCORSO A VUOTO	8	VACUUM RELIEF VALVE
9	VALVOLA DI SCARICO OLIO	9	OIL RELIEF VALVE
10	VALVOLA DI RITORNO OLIO	10	OIL RETURN VALVE
11	VALVOLA TERMOSTATICA BY-PASS	11	BY-PASS THERMOSTATIC VALVE
12	VALVOLA DI SCARICO PRESSIONE	12	PRESSURE EXAUST VALVE
13	FILTRO OLIO	13	OIL FILTER
14	SERVOVALVOLA	14	SERVOVALVE
15	TERMOSTATO	15	THERMOSTAT
16	ELETTROVALVOLA DI MESSA A VUOTO	16	OFF LOAD SOLENOID VALVE
17	VALVOLA DI MESSA A VUOTO	17	OFF LOAD VALVE
18	INDICATORE DI PRESSIONE	18	PRESSURE GAUGE
19	LIVELLOSTATO OLIO	19	OIL LEVEL SWITCH
20	REFRIGERANTE ARIA	20	AIR COOLER
21	REFRIGERANTE OLIO	21	OIL COOLER
22	SONDA DI TEMPERATURA ARIA	22	AIR TEMPERATURE SENSOR
23	SONDA DI TEMPERATURA OLIO	23	OIL TEMPERATURE SENSOR
26	SONDA DI PRESSIONE	26	PRESSURE SENSOR
31	ELETTROVALVOLA DI SCARICO CONDENSA	31	CONDENSATE DRAIN SOLENOID VALVE
33	ESSICCATORE	33	AIR DRYER

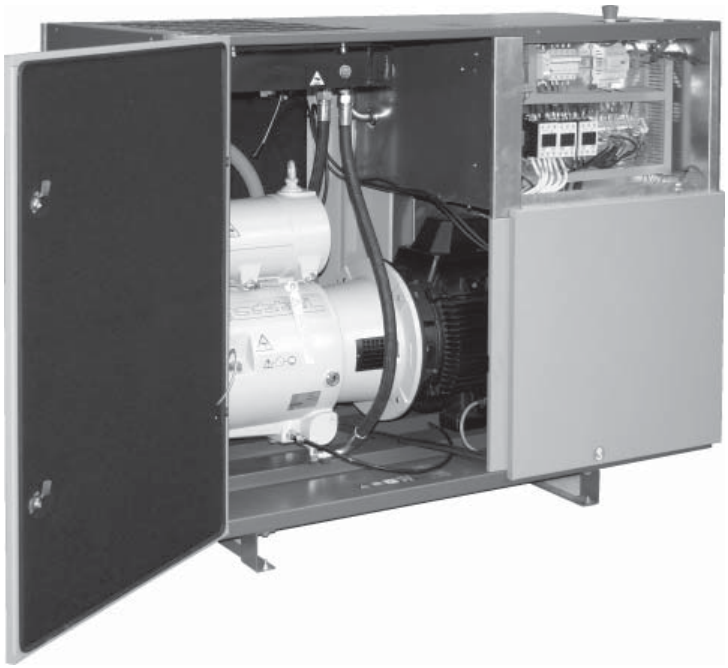

813a

All components are enclosed in a soundpro- o ng canopy in sheet stell , epoxy powder painted and lined with deadening re-resistant material.

The canopy has a pre- lter to prevent intake of gross particles that might prematurely clog the radiators and air lter.
Wide detachable panels and hinged doors allow easy access for all.

The base has openings to allow easy lifting and handling of the compressor (See Section 4).
Standard packing includes: xing on wooden pallets,protective polythene cover,and a cardboard box.

158

Compressor
The vane compressor is a volumetric rotary compressor.
It consists of a cylinder (stator) in which a rotor, mounted eccentrically and tangential with it rotates, and two end covers.
The rotor has longitudinal slots in which the vanes slide.
The vanes are pushed against the stator by centrifugal force.
Sealing of the moving parts, cooling and lubrication are provided by an ef cient injection of oil through proper ports, due to the pressure difference between the compression chamber and the oil receiver. No pump for uid circulation is needed.
An oil lm on the inner surface of the stator prevents direct contact of the moving parts and avoids any wear.
In the vane compressor there are no axial thrusts pushing the rotor against the end covers.
Therefore there is no need for thrust bearings.
The rotor is supported by white metal bearings having a practically unlimited lifetime.
The air drawn in rst passes through a lter and then through the modulating valve.
The decrease in volume of the pockets formed by the stator, rotor and vanes produces a continuous, pulse-free, compression.

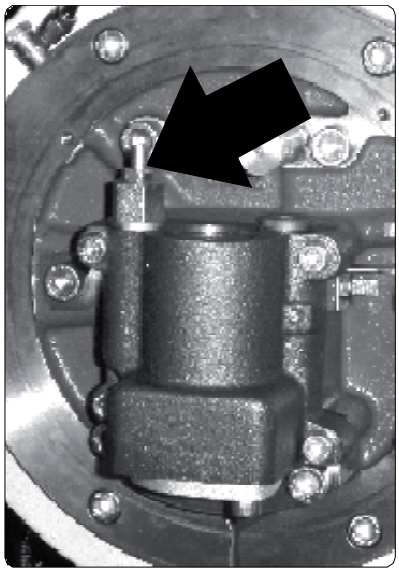

060

Intake valve
The intake valve, driven by a speci c servovalve through a hydraulic circuit using the same oil as used for lubrication, adjusts the intake air quantity to the air system requirements.

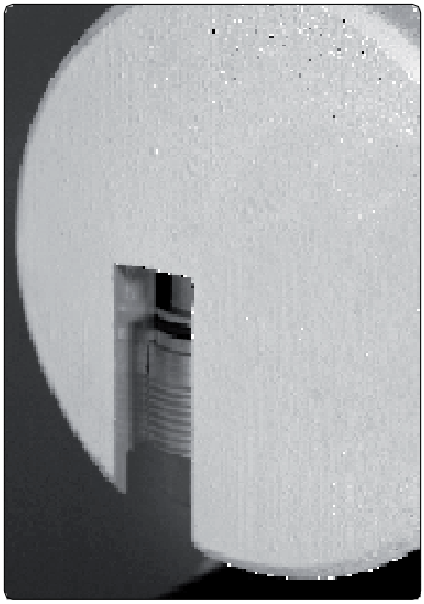

159

Minimum pressure and non return valve
Compressed air is delivered by the compressor through a valve ensuring a minimum pressure inside the oil chamber, so as to guarantee smooth operation when the compressor is delivering air. This valve also prevents the compressed air in the system from returning to the compressor.

Oil separation
The air/oil separation occurs in different stages and ensures exceptionally low oil consumptions.
The main mechanical separation occurs in the oil chamber through a labyrinth path.
This mechanical separation works via the continuous changes of direction of the air ow in the labyrinth path.
The last separation occurs through the coalescing lter, removing the remaining oil vapours from the air.
This particular oil separation system brings to a very reduced oil consumption. The large size of the lter and quality of materials ensure a long life of the lter itself.

Electric Motor
The compressor and the motor are connected by means of exible coupling. This ensures a perfect alignment, no power absorption, silent operation and no need for maintenance.
The electric motor is asynchronous, threephase, 4 poles, with short circuit winding.
- Class F isolation
- IP 55 protection degree
- Power supply according to IEC 38 standard.
- Voltage/Frequency V 230/50 - 400/50 Hz - V 230/60 - 460/60 Hz

Cooling Systems
The compressor comes with two aluminium radiators and suitable for cooling oil and compressed air, respectively.
An air ow, output from the fan inside the sound poof cabin, comes into contact with the radiators and removes the heat generated during compression.
The temperature of the output compressed air is slightly higher that the environmental temperature.
See technical characteristics attached.

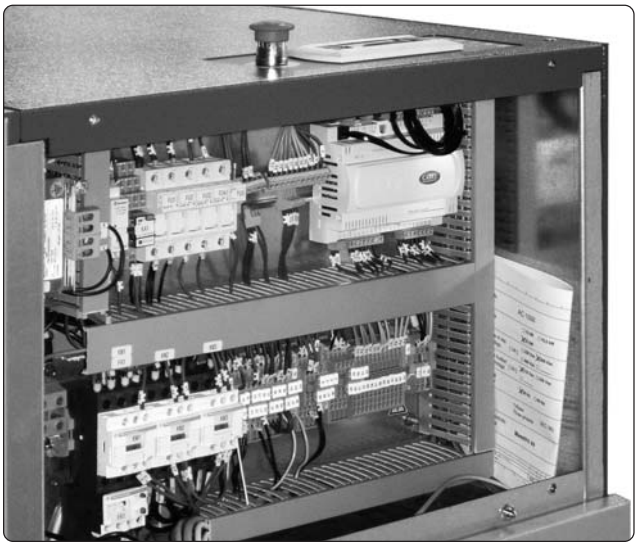

815a

The Diagram is contained in a specific document holder pocket.

Electrical Starter
The protection class is IP 54, and it includes
- Star-Delta starter
- Fan motor protection (by magneto-thermal switch)
- Main motor protection (by thermal PTC) (AC 30s version)
- 110 V transformer for auxiliary circuits
- 24 V transformer MAESTRO^{XS} control device
- Protection fuses for auxiliary and primary circuits of transformer
- Terminal board for the remote restarting of start/stop controls and signals
- Emergency push-button
- Micro-door
- Safety block:
  for high temperature in the compressor, motor overload, oil low level, insuf cient ventilation, air and oil high temperature, emergency stop, clogged separator lter, failure in the pressure sensors

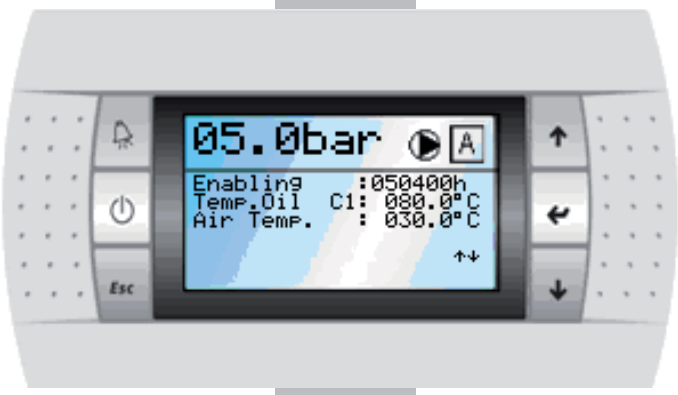

851

MAESTRO^{XS} is a programmable control unit which adapts compressor operation to the speci c requirements of the air line it is connected to. It features various programming levels and performs operating and fault controls and analysis.
Advanced programming and analysis levels are protected by digital codes to prevent unintentional access.
Maestro xs also contains a memory which saves settings and operating data even if the compressor is disconnected from the power supply or switches off due to a power cut.

Hardware Characteristics

- Microprocessor-based technology
- Ergonomic control panel with rapid access keys to main menus
- Access keys to menus, start/stop and reset keys with Led-controlled indications
- “LCD” display – text with blue leds - 8 lines - 22 types
- 24 V AC 50/60Hz Power Supply
- 24 V dc Digital Inputs
- Digital output with clean contacts up to 230Vac and until 24Vdc
- Analogue output 0-10 Vdc
- Pressure analog signals (4-20mA)
- Temperature analog signals (NPT)
- Interfaces:

❏ RS485 to communicate with other “MAESTRO xs” devices
❏ RS485 (optional) to communicate with supervising PC and lan

Software Characteristics:

- Easy use based on a menu structure
- Updating possibility
- Display of :

❏ Analogue data:

- Line pressure, pressure in the chamber, oil temperature, output air temperature

❏ General data:

- Alarms, operating messages, machine status, maximum and minimum pressure, last start and last stop

❏ Hour counter:

- Display of schedules of activation, start, loading, maintenance warns

❏ Events archive:

- Storage of alarms and blocks, with the indication of the when the alarm was activated, machine status.

The device allows for:

- User Interface in 8 languages (Italian, English, French, German, Spanish, Polish, Czech, Portuguese)
- Weekly and time schedule of starts and stops
- immediate reading on display of data relevant to the compressor operation:
  - ❑ Compressor hours of activation and line pressure of the equipment
  - ❑ Pressure oil chamber
  - ❑ Output air temperature and compressor oil temperature
  - ❑ Hours of running and hours of loading
- Programming of basic parameters for optimum operation of compressor accessible by user:
  - ❑ Control modes of compressor (Local/remote, master/slave)
  - ❑ Operation modes (Automatic, Continuous, Modulation)
  - ❑ The advanced programming of parameters, protected by “password” allows the qualified engineer to change those parameters to which the user cannot access directly
- Checking the input and output status of the gear case to detect any failure in the compressor electric equipment
- Storage of up to 20 failure events
- The check of the integrated dryer (plus models)
- The remote control by clean contacts of the machine status below:
  - ❑ Activated compressor (optional)
  - ❑ Running compressor (optional)
  - ❑ Compressor under load (optional)
  - ❑ Compressor blocked (standard)

Communication

MAESTRO^{xs}, connected to the Mattei supervision device (optional), allows for:

- Remote monitoring by web interface
- Alarm signaling by e-mail, fax or mobile phone.

WARNING !!!

The compressor has been designed to compress **AIR ONLY**.

The compression of other gases is FORBIDDEN.

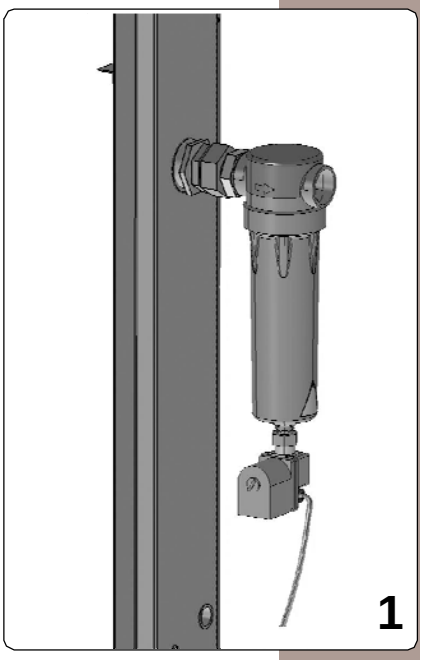

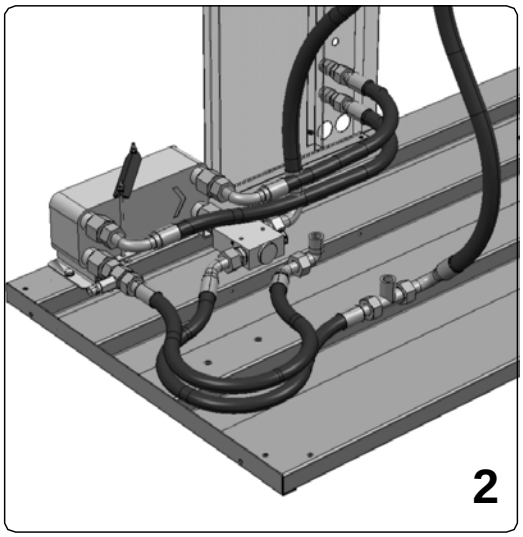

OPTIONALS ACCESSORIES

The machine can also be customized according to meet different requirements by purchasing specific accessories such as:

Separator and Condensate Drain Kit (Photo 1)

Heat Recovery Kit (Photo 2) to heat water for sanitary and processing purposes. The kit is made up of a water/oil plate exchanger, thermostatic valve and connection piping. The kit is a part of the compressor air-cooling system and in case of water shortage or reduction in its flow, the thermostatic valve duly deviates oil to the standard circuit.

Highly Efficient Suction Filter (Photo 3) able to hold solid particles of more or equal to 3micron with a filtering efficiency of 99%.

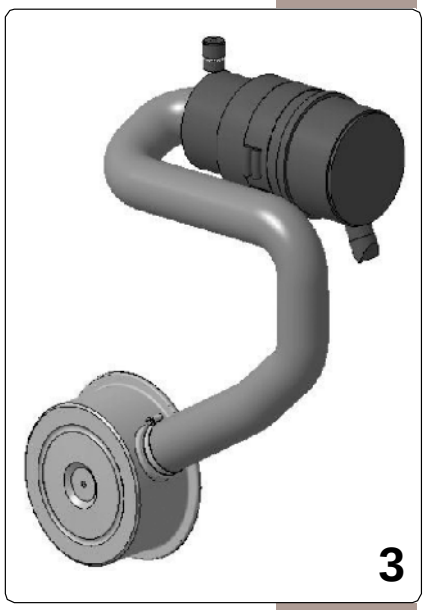

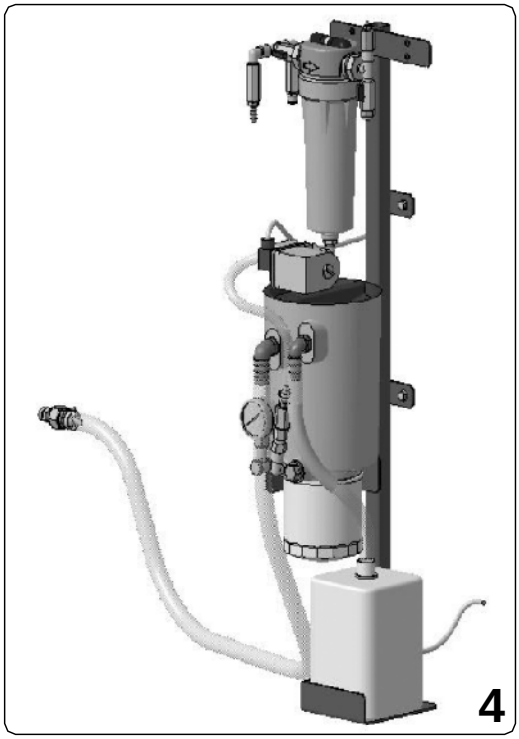

Water/oil Separator Kit (Photo 4)

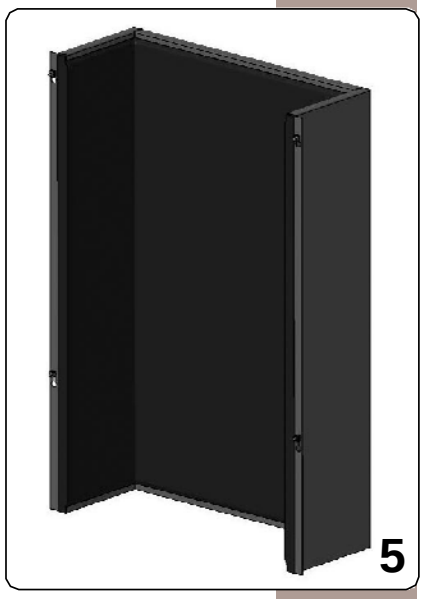

Soundproofing duct kit (Fig. 5) it reduces the sound pressure level on the intake side of the cooling air.

Built-in Dryer (versions plus)

Each AC unit (OPTIMA / MAXIMA) is supplied with a compressed air cooling radiator. Cooling produces condensation that is unloaded from specific separators and drainpipes that can be applied on the front of the machine (see this section Optional Accessories).
Many industrial applications require that the compressed air be almost completely emptied from the water vapour it contains so as to prevent any further condensation from forming inside the line pipes to which it is connected.
Hence, devices that lower the dew point by a few degrees above 0°C should be installed.
In the plus versions the setting up of the machine includes a dryer with a refrigerator cycle that guarantees an adequate compressed air quality.

The design of the compressor allows for integrating a dryer with refrigerator cycle directly installed on the machine.

An electronic controller controls the dryer, which manages its functional parameters according to the different operating load cycles.

089

WARNING!!!
For compressors in the ***plus*** version see tables "electricity supply for compressor and dryer" on page 4.03

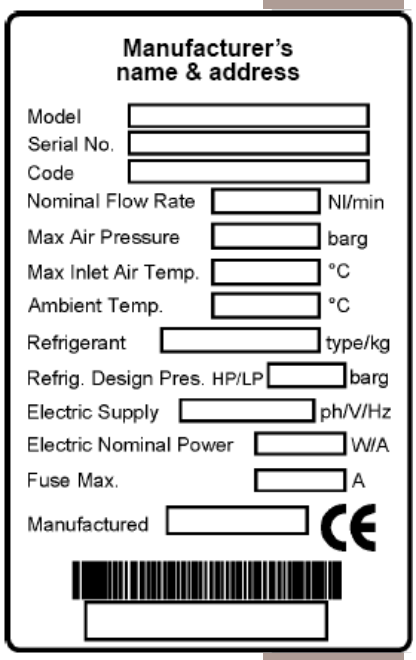

381

ID Plate
The product ID plate contains all the machine's essential data. Removing or tampering the id plate forfeits the right of guarantee.

Operating Mode

When the compressor is activated, the drier also starts after a preset delay.

Alarms are inserted with 5-minute delay to allow the drier to reach its operating mode.
Once this delay has elapsed, the alarms start and begin monitoring the system.

Once started, the dryer compressor group stays on until the following conditions occur:

✓ The compressor is stopped with the "STOP" push-button

✓ The dryer operating limit conditions are exceeded.

The controller manages the dryer operation by monitoring the dew point temperature that allows the system to run correctly.
The operating limits for such a parameter are as follows:

- ✔ The dew point temperature > 0°C;
- ✔ The dew point temperature < 6°C with Ambient Temperature ≤ 25°C;
- ✔ The dew point temperature < T.amb. – Δ ambient with Ambient Temperature > 25°C.

MATTEI sets the Δ ambient value.

If the dew point drops below 0°C, the controller will indicate the faulty condition [Ice Alarm] while the dryer compressor is kept active throughout the time corresponding to the parameter [Low Temperature Delay Time].
Once this time has elapsed, the dryer compressor is stopped so to prevent any ice from forming.
As soon as the temperature rises again above 0°C, the dryer compressor is re-started and the fault warning is automatically turned off.

Should the dew point temperature rise above the upper limit, the controller will indicate the fault condition [ALARM High Dew Point] for the time that corresponds to the parameter [High Temperature Delay Time].
When the set time has elapsed, the Alarm warning will stay on.
As soon as the temperature falls again within the above-mentioned operating interval, the fault warning will be automatically turned off.

NOTE:
The user can request Ing. ENEA MATTEI that the fault in the dryer corresponds to a machine BLOCK.

NOTE:
The design of the dryer prevents condensate from accumulating and ice from forming inside it.

In case of any failure in the dryer, by-passing the device is possible by disconnecting the hose linking it to the air radiator and connecting it directly to the delivery side. All joints installed are equivalent
In case of any failure in the dryer, by-passing the device is possible by disconnecting the hose linking it to the air radiator and connecting it directly to the delivery side. All joints installed are equivalent.

DOCUMENTATION
The machine comes complete with:
1 Use and Maintenance Manual complying with Machinery directive 2006/42/EC
1 CE Declaration of conformity
1 Start Report
1 Maintenance Sheet
1 Electrical Diagram (inside the control board)
Documents for the optional accessories

CERTIFICATIONS
Ing. Enea Mattei SpA has its company quality system certified according to standard UNI EN ISO 9001 by DNV while the final inspection procedures comply with standard ISO 1217.

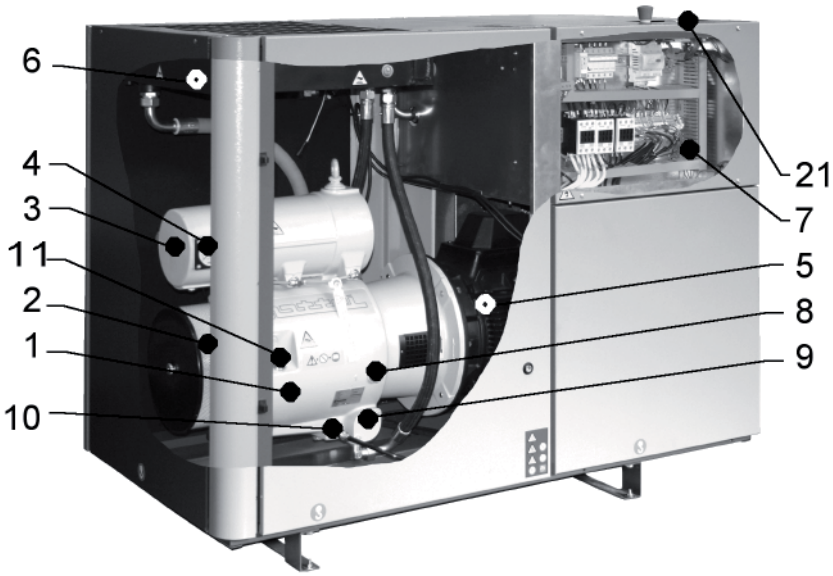

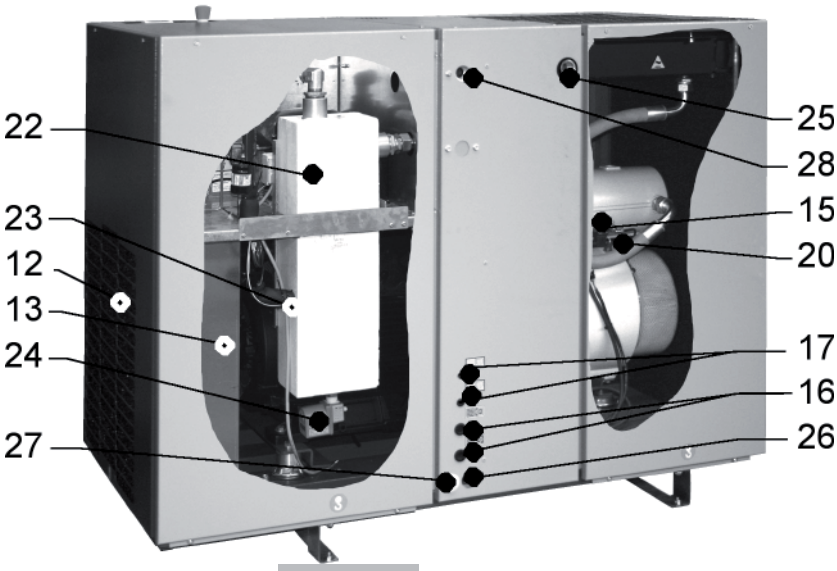

Position of main parts

1 - Compressor
2 - Air filter
3 - Air/oil separator
4 - Gauge
5 - Electric motor
6 - Air/oil radiator
7 - Electric starter
8 - Oil level indicator
9 - Oil filter cover
10 - Oil drain cock
11 - Oil filling cap
12 - Intake pre-filter
13 - Conveyor
15 - Off-load solenoid valve
16 - Arranged for water in/out connections for the heat recovery
17 - Arranged for condensate-drain connection for the dryer
20 - Oil temperature probe
21 - MAESTRO xs
22 - Dryer (2)
23 - Dewpoint probe
24 - Timed electronic drain (2)
25 - Air delivery
26 - Electricity supply
27 - Additional hole
28 - Air delivery

(**2**) - Dryer kit

Technical Data and Overall Dimensions

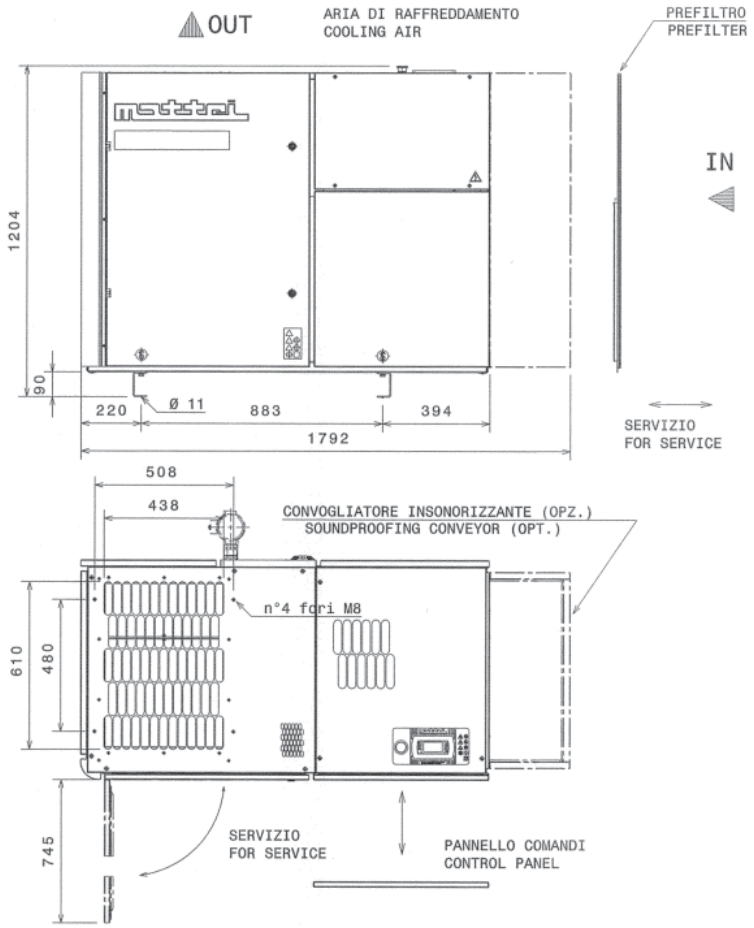

ITEM	CONNECTION	SIZE
A	INGRESSO LINEA EL.SUPPLY	Φ31 MAX
B 1)	SCARICO CONDENSA CONDENSATE DRAIN	---
B1 2)	SCARICO CONDENSA CONDENSATE DRAIN	Φ10
C	USCITA ARIA AIR OUTLET	Rp 1
D 3)	ENTRATA ACQUA WATER INLET	---
E 3)	USCITA ACQUA WATER OUTLET	---
F	FORO SUPPLEMENTARE SUPPLEMENTARY HOLE	Φ31 MAX
CG	CENTRO DI GRAVITA' CENTER OF GRAVITY	

AC 15 H-L-HH	Massa Kg Mass (con olio) (with oil)	445
= = PLUS		485
AC 18 H-L-HH		445
= = PLUS		485
AC 22 H-L-HH		450
= = PLUS		490
AC 30s H-HH		500
= = PLUS		540
SUPERFICIE DI CARICO LOADING AREA m2		~0,28
CARICO SULLE FONDAZIONI FLOOR LOAD max N/cm2		~19

1) VERSIONE "PLUS" / "PLUS" VERSION — 2 x Rp 1/4

2) CON SEPARATORE DI CONDENSA / WITH CONDENSATE SEPARATOR — Φ10

3) CON KIT RECUPERO CALORE (OPZIONALE) / WITH HEAT RECOVERY KIT (OPTIONAL) — 2 x Rp 1/2

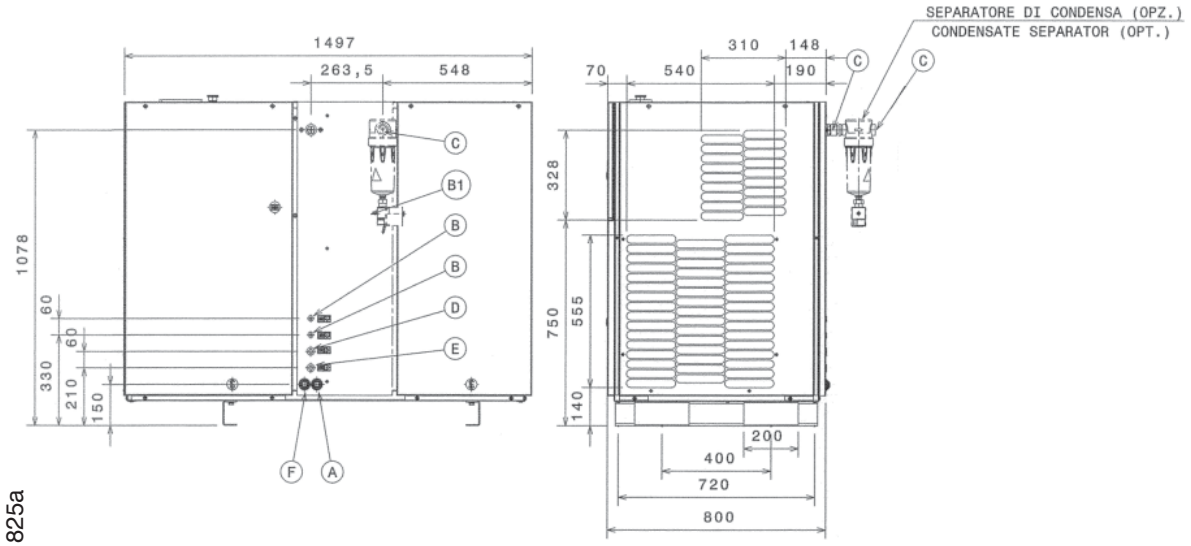

825a

003a

098

The whole area for the machine handling, including the space between the parking area for transport means and the machine installing area should be identi- ed and inspected beforehand, to nd any possible "**DANGEROUS AREAS**".

Be careful when handling, lifting and transporting the machine, not to damage it and not to damage things or cause injuries to persons.

826b

For this purpose:

❏ Verify the total mass of the machine and use a forlift truck or an adequate lifting means. Speci c pictrograms indicate the lifting points.

❏ The centre of gravity is near the coupling between motor and compressor; before lifting, check (lift the unit from the ground just slightly) that lifting points are correct and there is not risk of overturning.

❏ When lifting, be careful not to damage the bearing structure (base) of the machine and the soundproof canopy.

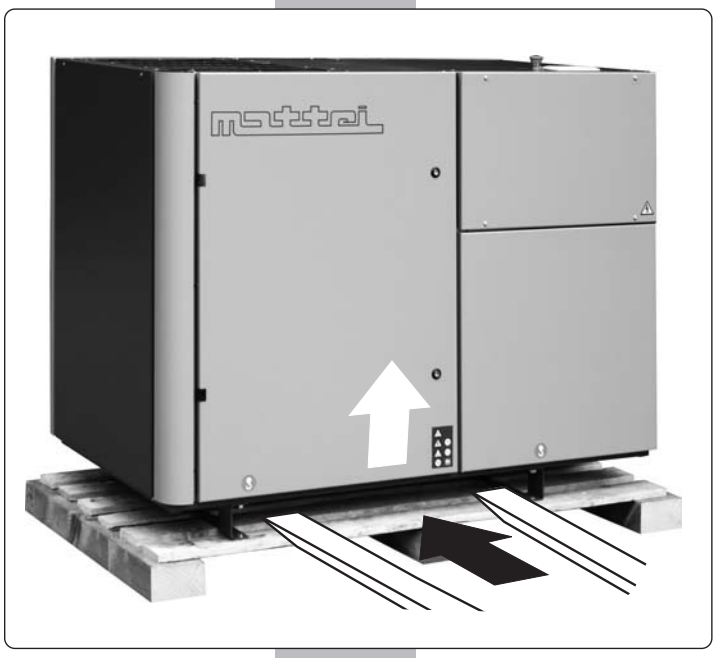

827b

During the transport, carefully x the machine to the means used, by blocking it lengthways and sideways.

It is recommended to protect the machine from atmospheric agents with suitable covering.

Unpack the machine by removing the guards and place it on the oor by means of a forklift truck to remove the pallet.

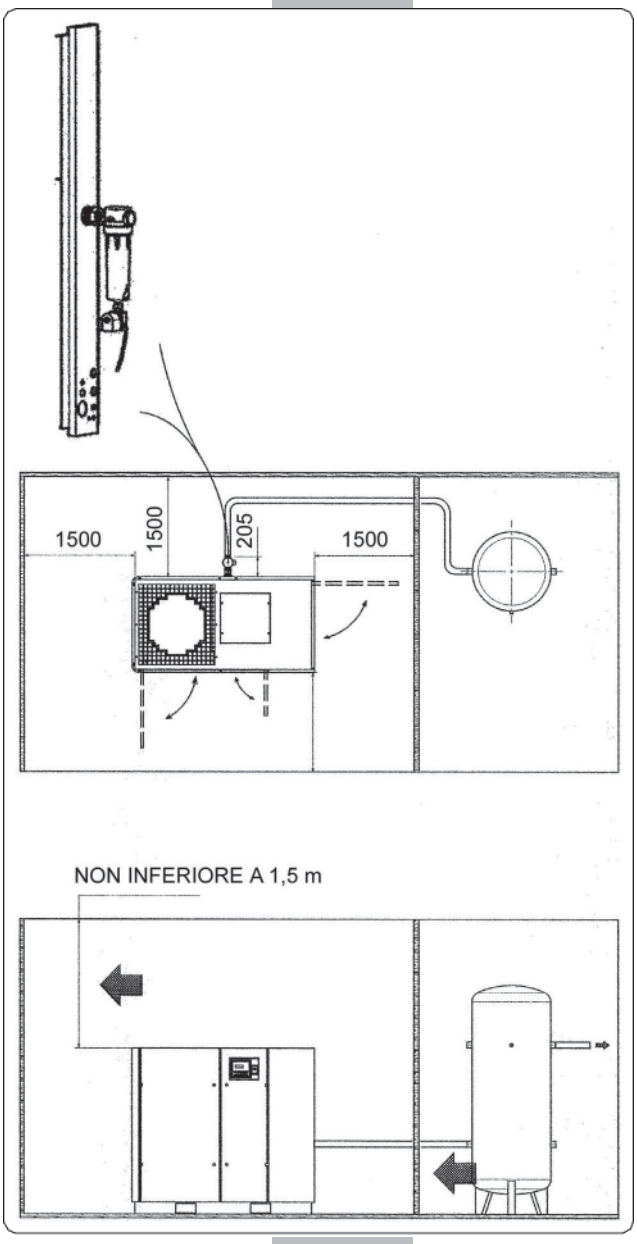

828

Position of compressor

In the section “Technical Data ”you can nd the overall dimensions, the weight,and the cooling values of the machine.
The compressor must be installed in a covered and well ventilated area ,away form heat sources.
It can be simply placed on a solid and level oor.
It does not require any type of special foundation.
Space and ventilation around the machine are essential.
An air-cooled compressor,driven by an electrical motor,produces heat equal to about 85% the absorbed power.
For the AC 1000 Series machines,having the cooling air outlet on the canopy top panel, the distance from the ceiling should not be lower than 1,5 meters.
If such a clearance is not possible, a hot air conveyor must be installed (see further on the section on ducts size and heat recovery).
The 1,5 meter distance, free from any obstructions, should be also kept on the intake end.
To make it easier to perform checks and maintenance operations on the compressor leave at least 1,5 m clearance from all other sides.

829

102

Far Electrical connection

Only qualified staff should connect the power to the electrical network and in compliance to the enforced regulations.

098

WARNING !!!

To permit safe maintenance of all the compressor parts, including the electrical board, the Customer should install an automatic line knife switch and a magnetothermal switch of an adequate size as close as possible to the machine.

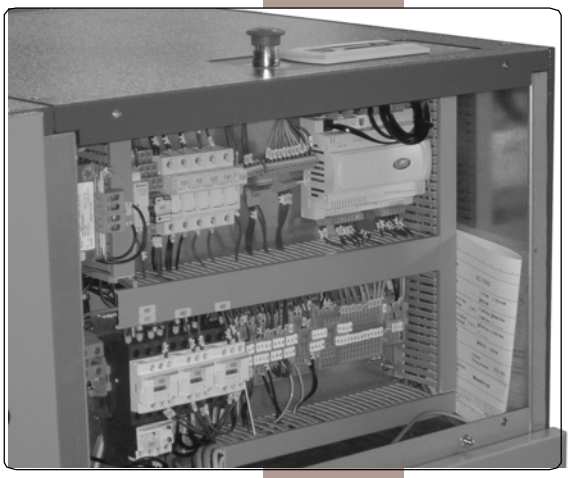

815a

The characteristics of the electrical motor start should be taken into consideration when choosing the line knife switch and the magnetothermal switch.

The size adaptation of the power cables between line knife switch and the control board of the compressor should be made using the values given on the technical sheet of section “SECTION DATA “.

All the machine auxiliary components are already connected to the control and check board and are powered with the transformer.

For further details, use the specific electrical diagram supplied with the machine or the general one attached to this Manual.

Alimentazione Compressore *Compressor Supply*			
400 Vac	50 Hz	Trifase *Three-phases*	(3F + ⏚)
460 Vac	60 Hz		
230 Vac	50 Hz	Trifase *Three-phases*	(3F + ⏚)
230 Vac	60 Hz		

Alimentazione Essiccatore *Dryer Supply*			
230 Vac	50 Hz	Monofase *Single Phase*	(1F + N + ⏚)
	60 Hz		

098

WARNING !!!

It is to be noted that the machine should ALWAYS be connected to the earthed equipment.

801a

Connection to the air distribution system

Compressed air distribution

101

Only qualified personnel should carry out the connection to the air distribution system, in compliance with the regulations in force.

The aim of distributing air is to bring compressed air from the machine to the end users, with the lowest pressure drop and energy waste.

To avoid losses and wastes, regularly check all pipings of the distribution equipment and all accessories.

Filters, regulators and other accessories should undergo proper maintenance.

The connecting pipe to the system should be exible and with a diameter not lower than the pipe leaving the machine.

A detect valve is required to isolate the machine from the air distribution system in case of maintenance.

WARNING !
The machine is equipped with a NON RETURN VALVE; if the detect valve is closed when the air distribution is operating some air under pressure could remain inside the connecting pipe !
Arrange a draining system for the piece of piping between the compressor and the detect valve.
In case there is the need to disconnect the machine, ensure that the internal pressure is exhausted before the dismantling procedure.

Near the machine, derive a exible hose from the distribution system and connect it to a blowing gun: it is needed for periodic cleaning of the radiator, the intake lter and all other machine components.

The air drawn in by compressors contains, in a variable quantity and depending on the ambient conditions, a certain quantity of water indicated as relative humidity.
After air has been compressed, it is cooled in a speci c radiator, which all versions of the Mattei compressors are supplied with.
Cooling air produces condensate of a good quantity of the water it contains.
The condensate produced is separated and drained with an automatic device (optional).

Please note that condensate should be collected and eliminated in compliance with current laws.

Dimensions of compressed air distribution pipings

We mention that the main causes for wastes are pipings with unsuitable diameter and losses due to an improper setting up of the equipment or deteriorated materials.

The pipe diameter must be duly selected so as to minimize the pressure drop between the compressor or the storage receiver and the point of use, based on the machine features, like air delivery and working pressure.

The pressure drop is proportional to the pipe length and most losses occur during the change of direction (curves, elbows) and in the valves.

With a pipe having the same diameter as the compressor outlet, the length should not exceed 50 m.
To make a check of one's own equipment, "Table 1" gives the load losses, over 100 metres straight piping, according to nominal diameters usually employed and at different air delivery and working pressure conditions.

A perfect air distribution system should limit the pressure drop from compressor to the point of use within few tenths of bar.

Table 1 – Load losses (bar) over 100 m straight piping

Pipe Diameter	Free Air Delivery [m³/min]	PRESSURE [bar]				
		6	7	8	9	10
1"	1	0,087	0,076	0,068	0,061	0,056
	2	0,315	0,275	0,245	0,220	0,200
	3	0,666	0,583	0,518	0,467	0,424
	4	1,134	0,993	0,883	0,795	0,722
2"	4	0,038	0,033	0,030	0,027	0,024
	8	0,138	0,120	0,107	0,096	0,088
	16	0,496	0,434	0,386	0,347	0,316
	24	1,050	0,919	0,817	0,735	0,669
3"	8	0,019	0,017	0,015	0,013	0,011
	16	0,069	0,060	0,054	0,048	0,044
	32	0,248	0,217	0,193	0,174	0,158
	64	0,894	0,783	0,696	0,626	0,570
4"	16	0,018	0,015	0,014	0,012	0,011
	32	0,064	0,056	0,050	0,045	0,041
	64	0,230	0,201	0,179	0,161	0,146
	128	0,829	0,725	0,645	0,580	0,528

Heat Recovery

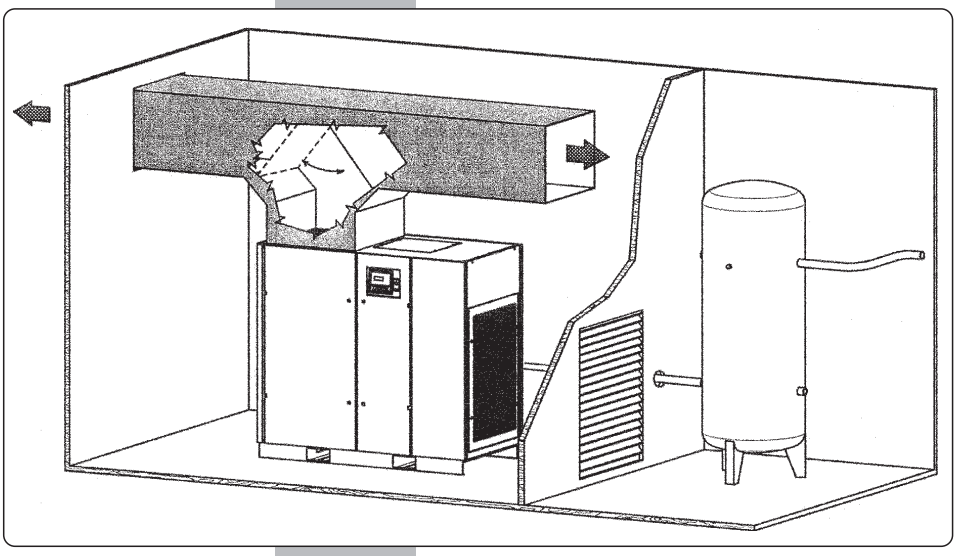

119

As mentioned in above section on Page 3.03, a fan produces an airflow that cools both the oil and the compressed air, heating up when it goes through the radiator.

The recoverable heat represents about 100% of the power installed in the AC 1000 SERIES machines.

The heat produced can be conveniently recovered and used to heat rooms.

Any duct should be adequately sized and, if necessary, shaped in such a way to allow for a correct use during Winter and the output of hot air during Summer.

The duct to recover/output hot air should be designed by a competent engineer and should limit the load loss at approximately 20 Pa.

If the duct offers greater resistance, an auxiliary extractor should be used to prevent any overheating of the machine.

As an example, a duct with a higher or equal section to the coming out of the machine (the output grid on those versions equipped with a soundproof case), made up of some 10 m of straight duct and two 90° elbows properly connected, allows the maximum tolerated limits to be maintained.

However, it should be noted that 10 Pa increase corresponds to some 2 - 3 °C increase in operating temperatures.
As for the recoverable heat, it should be noted that 1 kW of installed power allows for the heating up a volume of about 30 cubic meters by 1 K (1 kW = 860 kcal/h).

In the Section on “TECHNICAL DATA” attached to this manual the values required to realize that which is mentioned above are indicated.

012b

EMERGENCY - STOP button
The machine stops immediately when the button is pressed, while skipping the regular stop sequence provided by the STOP button.

098

This button is to be used also in an emergency situation.
Frequent stops of the compressor by means of this button **may damage its operation**.

WARNING
Please refer to the Manual of "**MAESTRO^{XS}**" Control attached to this Manual for detailed, description of keys, programming, and all of its functions.

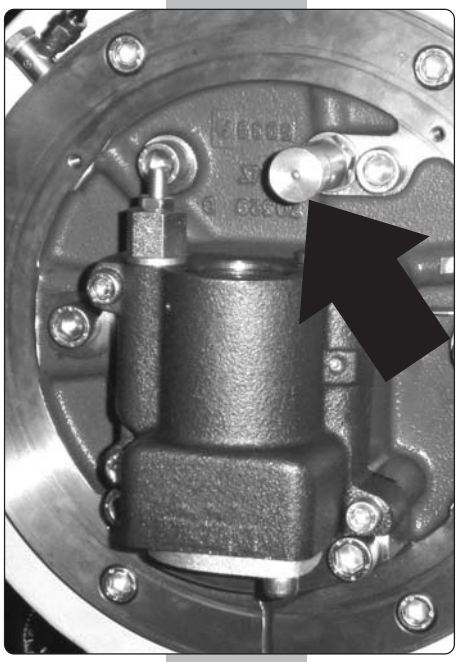

831

Safety Valve
A “SAFETY VALVE ”protects the compressor in case of air overpressure inside the chamber,while limiting the value to its own setting limit.
The safety valve is set at 12 bar for L and H version of compressors and 15 bar for HH versions.

Servovalve
Besides the operating pressure control perfomed by MAESTRO^{XS}, compressors of AC 1000 Series ,keep the modulation and off load functions by means of a “SERVOVALVE ”.
This servovalve limits the maximum operating pressure,during the CONTINUOUS mode operation by acting on the intake valve, which closes as the internal pressure increases.
The maximum operating pressure is set at its optimal value during the nal inspection and DOES NOT require any further adjustments.

Setting the Servo Valve Maximum Pressures

Version	L	H	HH
Servo valves	8 bar	10 bar	13 bar

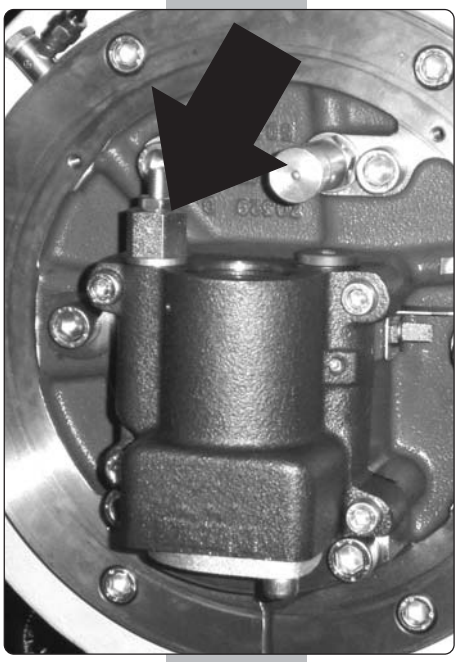

832

103

Note
Compressor operation depends on the set values; it is suggested to ask for modi cation of settings only in case of real need and with knowledge.
Only skilled personnel should make the setting.

098

WARNING !!!
DO NOT set the servovalve at HIGHER values than those used by the manufacturer, Ing. Enea Mattei S.p.A. In fact, if the machine works at higher pressures it requires more power; this could lead to overheating and machine shutdown.

851

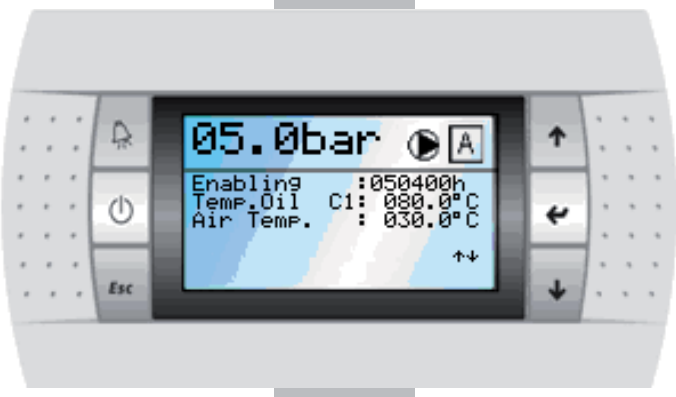

099

MAESTRO^{xs} is a programmable device to control the machine that can adapt its operation to the speci c requirements of the network it is connected to.

It has several programming levels, with special possibilities of control/analysis of operation and of failures.
The advanced programming and analysis levels are protected by digital codes so as to prevent any unintentional tampering.
Maestro^{xs} has a storage that saves the settings made over time as well as the data on operation even if the machine is not connected to the electrical line or if voltage drops occur.
A weekly schedule of starts/stops can be set that is combined with the management of the connection to other machines so as to control any multiple installations as ef cently as possible.
“Maestro xs” is a control device made up of two separate units:

- Display with keypad
- Data input-output device

Keypad

The buttons are backlit for enhanced clarity and, in some cases, in order to complete the information provided by the device.

852

Reset buttons: Resets any faults detected by the system. Eliminate the reason for the fault rst.

853

On / Off button: Enables and disables the compressor.

854

Esc button: Accesses the main menu and exits the current menu.

855

Up button: Moves around the various menus. Also increases the value of a variable in the edit mode.

856

Enter button: Accesses the selected menu and opens and closes the memory in the edit mode.

857

Down button: Moves around the various menus. Also decreases the value of a variable in the edit mode.

801a

Foreword

099

The user should appoint a quali ed person for operation and maintenance of the machine.

He should properly train all operators, so that they are acquainted with all needed measures to prevent any accident or injury to people.

All start and stop procedures as well as emergency ones should be known; they should be also periodically checked with the operators.

The operating and maintenance manual should be always available; in case of loss or damage, further copies can be purchased from Mattei's sales organisation.

Checks before start

Before starting the machine, ensure that:

- ❑ the electrical system complies with voltage and power of the machine and that wires are of suitable section;
- ❑ the machine is earth connected and protected against possible short circuits;
- ❑ the mains isolator is installed near the machine;
- ❑ the machine oil level is correct; with the compressor not operating and without pressure inside the chamber the oil should exceed the visual level indicator. In case of low level, top up with suitable oil of the same type as in use;
- ❑ the machine is connected to the compressed air system.

Operation Modes

Mattei compressors, to best comply with the users' need, have been designed to work in three main modes: Continuous, Automatic and Modulation.
The factory-preset mode is AUTOMATIC. To change the setting please refer to section 6.3.1 of MAESTRO^{xs} operating manual.

An overview of these three options is given below.

Continuous (Cont)

072

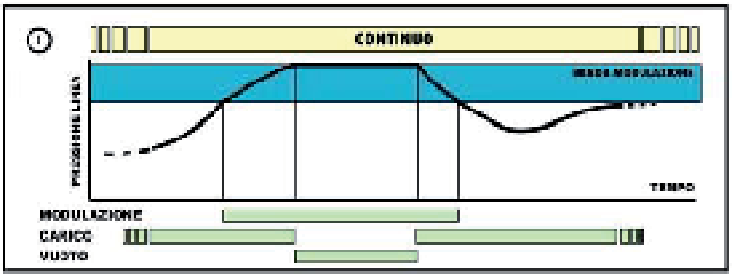

In this mode, the compressor delivers air within a clearly defined pressure range; maximum and minimum values are factory-set by Mattei though they can be customised using the programming functions in the [User] menu. When pressure reaches the maximum value (Pmax) the compressor is off-loaded (suction valve closed) and decompressed in order to reduce power consumption. As soon as a request for air from the network reduces pressure to the minimum value (Pmin) the compressor loads again and resumes air delivery. The compressor can be stopped at any time by pressing the stop button: the stopping procedure comprises a no-load run phase which lasts for a set time during which the compressor is decompressed.

Nota
If the unit is enabled with a line pressure greater than the set minimum pressure, the compressor does not start but waits for the pressure to fall below the minimum value.

Automatic (Auto) (Preset Mode)

073

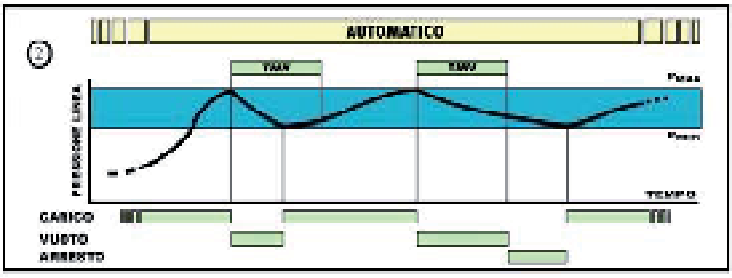

This mode adds another function to the previous one: the compressor can automatically stop at low or no air demand conditions. The cycle is the following. When line pressure reaches Pmax, the compressor is "off-loaded"; at this point, two things can happen:

1. if there is no demand for air it runs no-load for a certain period of time TMV (No-load Run Time) and stops when this period of time expires; it starts again as soon as line pressure falls below Pmin;
2. if line pressure falls to Pmin before TMV expires, the compressor is "recharged".

The above operating mode can be combined with a special characteristic of MATTEI rotary compressors, the MODULATION phase.

By suitably adjusting the its “servo-valve”, the compressor can modulate before reaching Pmax. This means that Pmax can only be reached in case of very low or nil demand.

Nota
If the unit is enabled with a line pressure greater than the set minimum pressure, the compressor does not start but waits for the pressure to fall below the minimum value.

Modulation

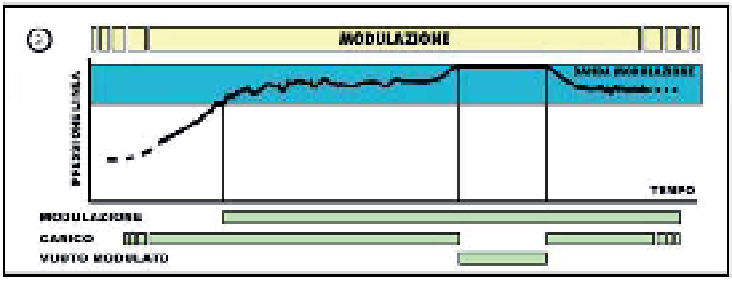

00744

All MATTEI compressors are fitted with an automatic system for adjusting pressure according to delivery pressure. The internal pressure of the compressor depends (partly) on line pressure and, consequently, on the demand for air; when the latter drops or is nil, line pressure and internal pressure increase. In Mattei compressors, the maximum pressure at which the unit runs no-load can be set (by calibrating a valve). For values slightly below maximum, the suction valve is only “partially” closed by suitably modulating machine capacity to line requirements. Maximum pressure and values slightly below this define a field or range which is known as a MODULATION BAND.
This operating mode exploits this potential. The control unit ignores the Pmax and Pmin. settings and operates the compressor without stopping except in case of an operator command.

Nota
The modulation bandwidth is typically 0.3 bar.

Suppose maximum no-load pressure is set (using the SERVO-VALVE) to 7.3 bar.

- For pressure values lower than 7 bar (7.3 - 0.3 = 7), the compressor delivers 100% of its capacity.
- For values ranging from 7 to 7.3 bar (the modulation band), the compressor delivers less than its rated capacity, suitable for line demand.

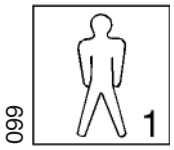

660

Upon delivery, the compressor is protected by an alphanumerical code which must be provided by Mattei and entered the rst time it is switched on.
The compressor will not work if this code is not entered because, as soon as the compressor is powered, the screen shown appears with the cursor ashing in the top left-hand corner.

859

ENTERING THE CODE

Press < ↵ > to move the cursor to the rst digit of the code to enter.
Press <↓> and <↑> to select the letters or numbers to enter and con rm with < ↵ >.
The cursor automatically moves on to the next position after each digit is con rmed and, if the code has been correctly entered, the rst page of the menu appears [MONITOR].
If the code is entered incorrectly, instead, MAESTRO xs asks for the entire code to be re-entered.

ⓘ After being entered correctly, the code will no longer be requested.
From now on, the compressor can be used and con gured.

In order to communicate with the user, MAESTRO^{xs} features carious menus that allow the compressor to be monitored and programmed. These are divided by function and not all of them can be accessed by the nal customer. Some of them are protected by one or more passwords.
The menus are divided according to the functions that they control.
The main menus used to manage the compressor are:

Menu	User access	Password	Menu ID
Monitor Menu	Yes	No	0
User Menu	Yes	No	1
Advanced Menu	No	Yes	2
Clock Menu	Yes	No	3
Log Menu	Yes	No	4
Network Menu	Yes	No	5
Info Menu	Yes	No	6

To simplify use of the compressor, some symbols are used to graphically represent certain functions, such as machine status and other settings.
Other symbols are used to report operating problems, special enabled functions, etc..
The various menus also use texts informing the user of the meaning of the variables and the functions they perform.
To simplify traceability of a variable, every menu is identi ed by a number, as shown in table 3. The same applies to the submenus and individual variables.

For a more detailed description of individual menus, please refer to the Maestro xs manual (code TE-CA2G-007) supplied with this manual.

Operational Failures

Failures can be divided as follows:
- ❑ Failures with an intervention signal (alarms)
- ❑ Failures causing the immediate stop of the compressor (blocks).

The card signals a failure by lighting of the reset button, together with a visual signal through icons and a sliding description.

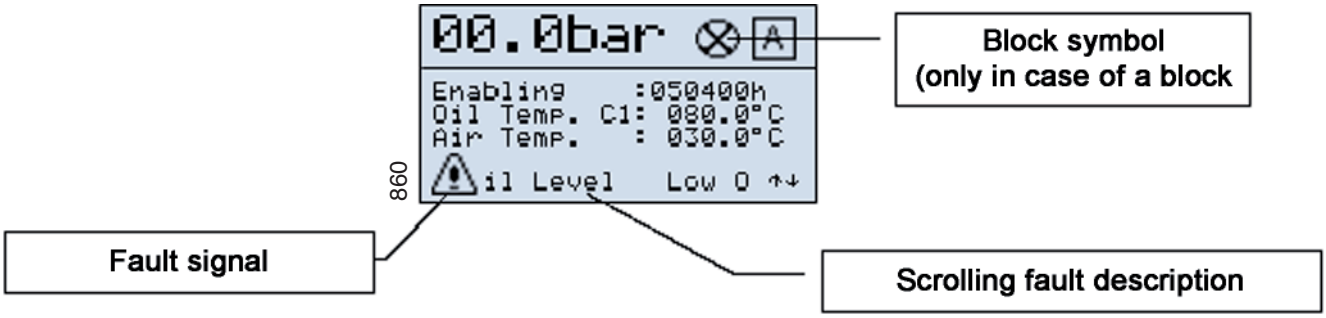

Press the “reset” key once, for more information about the kind of failure occured. A page appears that contains the information on the failure and speci cally:

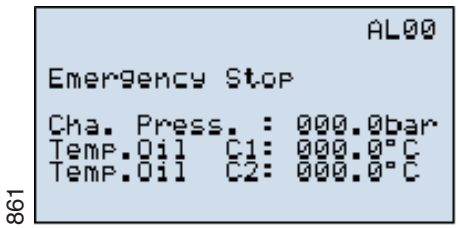

- ❑ The event code
- ❑ The working time at which the failure occurred
- ❑ The detailed description of failure to the main compressor (C1)
- ❑ The detailed description of failure to the additional compressor (C 2) when tted
- ❑ The chamber pressure at the moment of failure

All these information are stored in the incorporated historical archive together with other information, and it is possible to store up to 20 failures
When the failure number exceeds the allowed limit, the system clears the least recent failure to insert the latest one.
Press ““**Reset**” key a second time to reset the compressor operation.

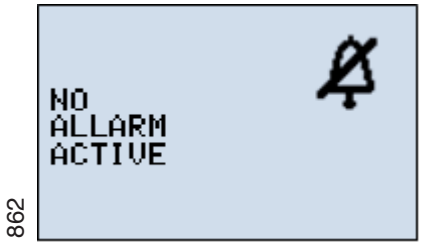

Note : for Plus versions the faults “frost alarm” and “high dewpoint” are visually signalled when the dewpoint temperature is out of the standard operating range, with automatic restoring as soon as the temperature goes back to the normal values.
See MAESTRO xs manual (code TECA2I-007) supplied together with this manual.

WARNING !!!
If the failure cause cannot be solved, the compressor will not start as the failure appears to be still active and re-displays the intervention request.

WARNING !!!
The rotation in the wrong direction can seriously damage the compressor.

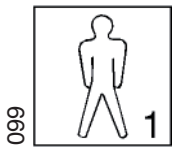

099

Once all foreseen operations before starting have been performed, and which have been described in the Sections above, the Maestro page displayed to the operator is :

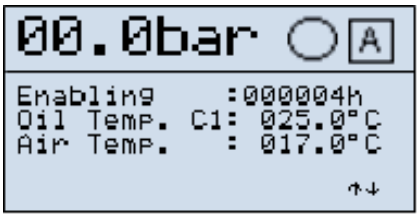

863

Starting
Press the key to switch the compressor “on”

853

The led lights with yellow colour.

The compressor is started. It starts off load (intake valve closed) and then goes on load after a pre-set time, subsequent to the star-delta switching delay

The compressor, from this moment on, delivers compressed air according to the set operation mode.

After starting, the page below appears within few seconds

864

Stop
To stop the compressor, press key

853

The yellow led of the ON key turns off.

The display shows:

865

The compressor is unloaded (decompressed) for a preset time (basic programming).

After the motor has stopped the residual pressure inside the compressor discharges completely in approximately one minute.

The display will show the following page

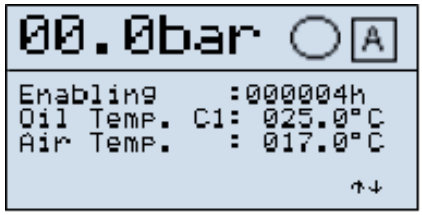

866

099

The machine can be restarted according to the above sequence, but it will start again only if the internal pressure has lowered under the maximum allowed value for the re-start (preset factory data not changeable by the user)

NOTE
MAESTRO^{XS} has a control logic that prevents an excessive number of consecutives starts.

This logic is cleared by the user 's manual intervention, if he/she acts directly by turning off and on the machine manually.

WARNING

098

An excessive number of consecutive starts may damage the main motor.
Operate manually only in case of real need and wait for a reasonable amount of time before restarting the machine.

The number of starts depends now on many parameters,the rated power,the operation cycle,the working pressure,and the ambient temperature.

For any requirement,please contact MATTEI.

801a

Suggestions on maintenance

Machine cleaning

Cleaning of the equipment should be carried out at regular intervals, following the schedule in this manual.
To clean delicate parts of the machine direct the compressed air jet so that neither machining waste nor humidity can penetrate in the mechanic assemblies.
Only use lint-free cloths to clean internal and/or moving parts (in contact with lubricant).
Always use perfectlly dry air during the cleaning and at suitable pressure to avoid injuries to the operator.

Maintenance schedule

The time intervals in the maintenance tables are only reference values concerning the machine operation at the company's conditions.
Environment factors affecting these intervals are mainly: machine environment (temperature, humidity) and air pollution.

Machine lubrication

Use only the lubricant quantity needed to lubricate the involved mechanism. Carefully dry the excess oil or grease with a cloth.
Sometimes an excess or a lack of lubricant may jeopardize the machine operation.
Only recommended lubricants or well known and tested equivalent lubricants should be used for lubrication
Replacement of the exhausted oils should be made when the machine is warm. The oil temperature should range between 25 and 30 °C. (see section 8).
The draining and lling holes should not be left open for more than the time needed to replace the oil.

Jobs to be performed during maintenance

During maintenance operations pay attention to all signs that may precede a failure, and speci cally:
- presence of corrosion,
- presence of wear,
- presence of loose unions or connections,
- presence of oxidized contacts,
- after each maintenance operation, exhaust the air from the pneumatic pipings.

Minimizing downtimes after a failure

It should be noted that correctly performed maintenance interventions may minimize downtimes after a failure.
A repair made in due time prevents further deterioration.
Only use original spare parts and repair the damaged component thoroughly, by your factory or send it to the nearest authorised service centre.

098

Regular Checks
WARNING !!!

101

After the first 50 hours of operation and every 6 months or 1000 hours:
- tighten nuts and screws fixing the cables in the command and control electrical board and in the terminal board of electrical motors.

102

Within the first 300 hours of operation:
- clean the oil return valves (Page 7.04).

Weekly (or every 50 hours)
- Check the oil level
- Check and Clean the solenoid valve lter of condensate drain (with optional kit).

Monthly (or every 200 hours)
- Clean the suction lter.
- Clean the oil radiator
- Clean the air radiator
- Clean the intake pre lter

Every three months (or every 500 hours)
- Clean the oil return valves

Twice a year (or every 1.000 hours)
- Replace the suction lter
- Tighten nuts and screws xing the cables in the command and control electrical board and in the terminal board of the motor

Yearly (or every 2.000 hours)
- Replace the oil lter
- Replace the oil return valves

Oil change
Rotoroil 8000 F2:
- every 12 months or 5.000 hours
Rotoroil 8000 F4:
- every 12 months or 5.000 hours
Rotoroil 8000 FG:
- every 12 months or 1.000 hours

Replace the oil filter at every oil change.

098

WARNING !!!
In dusty environments and/or at high temperatures, maintenance operations should be carried out more frequently.
The manufacturing date is quoted on rubber hoses.
Their operating life span is 3 years, after which they should be replaced.

098

WARNING !!!
Preventive maintenance agreements are available that help the user maintain the machine in the best working and ef ciency condition.
Please refer to **Ing. ENEA MATTEI S.p.A.** / **M.T.A.** for further details.

098

WARNING !!!
For compressors equipped with INVERTER, before performing any maintenance job, wait at least 5 minutes after you have disconnected the electricity supply.

362

017

833

101

Check of oil level (Photo 1)
When the compressor is not running and without pressure in the chamber, the oil level should exceed the speci c visual indication pilot light.

When the compressor is running and on load, the oil level should be about half of the pilot light.

Cleaning and/or replacing the air suction filter (Photo 2)
Unscrew the blocking knob and remove seal. Remove the cover and withdraw the ltering cartridge. Clean the cartridge with compressed air. Direct the air jet to the inside of the cartridge. To reassemble apply the reverse procedure of the disassembly.
Check seal and replace it, if damaged.

Cleaning the oil/air radiator (Photos 3)
The radiator is in the machine body.
The cooling ow goes through the radiator from the inside to the outside of the machine.
Hence blow a jet of compressed air through the radiator on the side of the opening of the cooling air exhaust.
Remove any dirt that has come from the inside of the machine body.

Centrifugal fan
Considering the compressor cleaning air ow, an air current owing from bottom to top crosses the radiator.
Hence, dust will mainly deposit on the lower part. To clean, proceed by removing the speci c door on the conveyor and blowing the radiator with a compressed air ow.

Axial fan
The same conditions as mentioned above in terms of air ow apply here too. In this case, the radiator is free from any obstruction preventing such an operation.

834a

101

Cleaning the pre-filters

The machine is equipped with a pre- lter to remove dust and is articulated by the in ow of air.

It glides on metallic guides in the side door and should be withdrawn from its housing for replacement or cleaning purposes.
It lters the suction air and washes the compressor while preventing foreign matters from entering the machine.

Frequent cleaning of panels is required. To do this, open the door from the xing locker, withdraw the panel and blow on it with a compressed air jet.

The synthetic material can be washed whenever necessary.

For washing no solvents should be used.

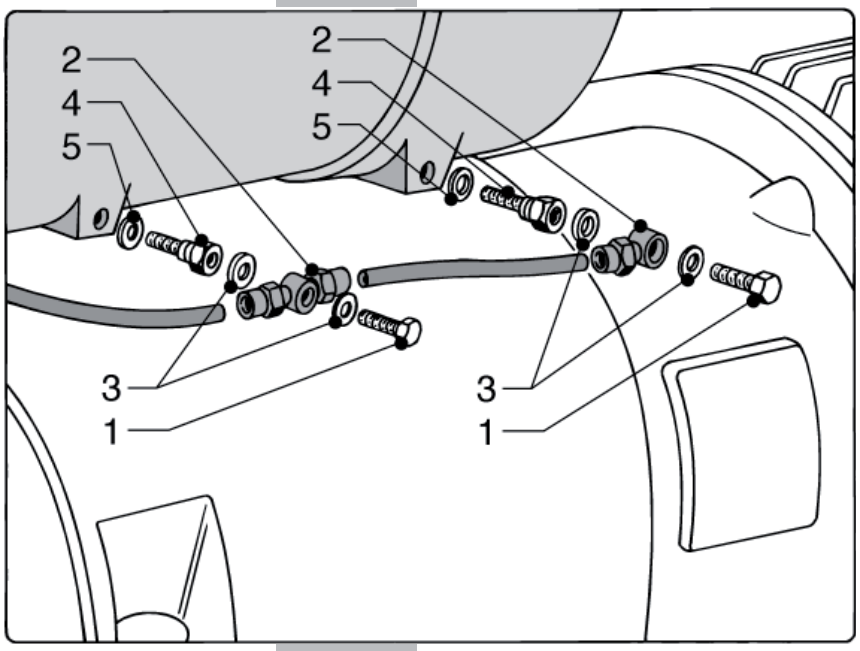

101

Cleaning and/or replacing the oil return valves

Unscrew the holed screws (1) blocking the oil return hose connections (2). Be very careful not to loosen the sealing washers (3). Unscrew and remove the oil return valves (4). Wash the valves with detergent and blow on them with some compressed air. Replace the sintered lter if it is very encrusted.
For the assembly, remember to always replace the OR-Ring (5) and proceed with the reverse procedure applied for disassembly.

044

101

Replacing the oil filter

Replace the oil lter every time the oil is changed. Once the oil has been drained (See section on the oil change), unscrew screws (Photo 1) from the lter cover and remove it after having rotated it 90° (Photo 2) in order to facilitate the grip.
Remove lter (Photo 3) from cover.
Before mounting a new lter, clean the housing.
To assemble, apply the reverse procedure while checking the condition of the OR-Ring on the cover and replace it if damaged.

047

048

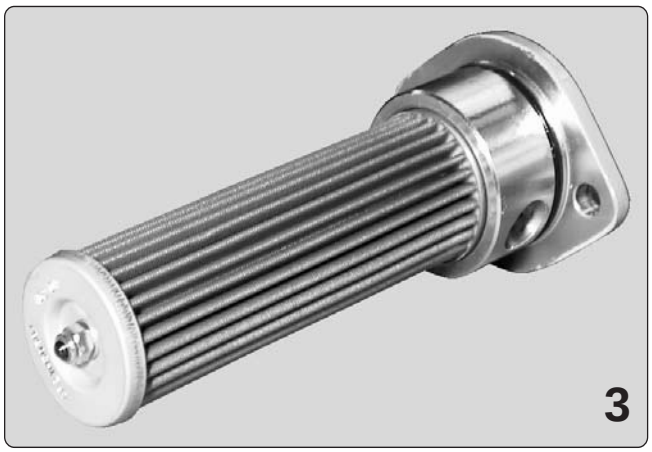

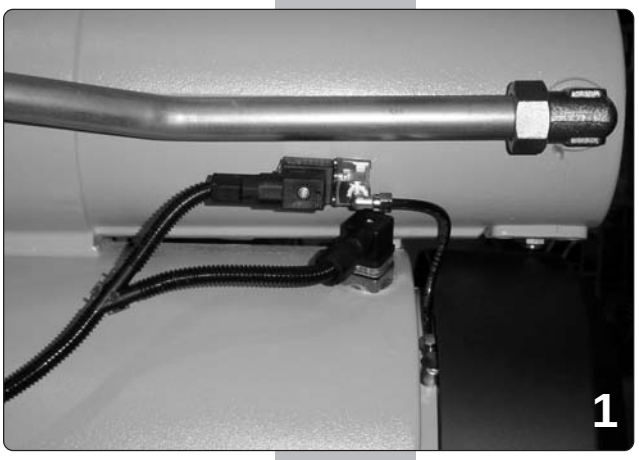

835

030

101

Replacing the air - oil separators elements

Under normal operating conditions, the separators should be replaced if an excessive consumption of oil or a high pressure drop through them occurs.

To accomplish this operation, proceed as shown in the subsequent photos regardless of the kind of fan used:

- Disassemble the solenoid valve connector for the off load, which is on the back of the separator body, and detach the relevant tube (photo 1).
- Proceeding as described in item 7.04 detach the small pipes of the oil return valves and the xing screws of the separator assembly (photo 2).
- Remove the delivery air tube. Loosen the ring nut (photo 3) of the holed screw (photo 4-5) xing the separator body to the oil chamber.
- Withdraw it while noting the reference notch position of the holed screw (photo 3-4):
  in the following mounting, it will have to be repositioned in the same way.

Now replace the ltering elements.

842

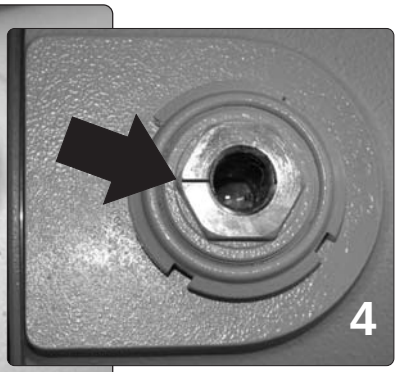

067

843

037

836

101

Replacing the air - oil separators

Withdraw the cover to which the separator element is xed while prizing with the suitable tools in the round groove of the cover (photo 6-7).
Loosen the ring nut, remove the sealing washer, the cover and the separator element with the relative O-ring.
Replace the element.
Replace the seal ring. Re-assemble the various parts, making especially sure that the O-rings (photo 9) are perfectly positioned in their corresponding housings.
Applying a veil of grease could help to keep them positioned during mounting.

Important: The holed screw should be re-positioned with its notch facing in the right direction (photo 3-4).

837

838

843

839

740

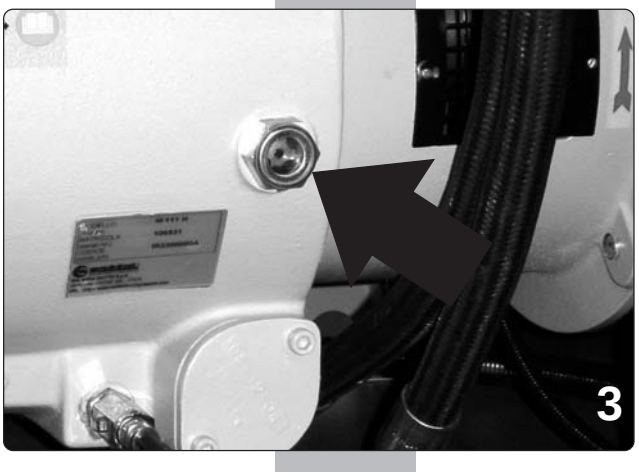

841

101

Foreword

As mentioned above, oil performs multiple functions that are crucial to the smooth operation of the compressor and, consequently, it is essential check both its quantity and condition at the recommended frequency.
Please refer to the speci c tables for selecting the oil types most suitable to the different operating conditions.

First change of oil

If not otherwise indicated on the speci c plate, the compressor is supplied with Rotoroil 8000 F2 oil.
The rst oil change and the rst oil lter change should take place within 5000 hours or a year.
It is to be noted that expired oil is dangerous for the smooth operation of the compressor, hence once the forecast interval for its change has elapsed, it should be replaced.
Oil replacement should be done with the machine off and with warm oil.

To drain oil, wait for the complete depressurization of the compressor, while verifying that the pressure gauge on the separator or on the tank shows that no more pressure exists inside.
Unscrew the cap of the lling gate slowly (Photo 1), while paying attention to the possible presence of foam. If necessary, wait for some minutes for the oil to demulsify.
Open the drain cock (Photo 2) and drain the oil into a suitable container.
Close the drain cock upon the operation end. Fill the oil chamber with new oil to lap the gate.
Replace the cap seal and tighten it well.
Start the compressor and let it run for some minutes, and then stop it. Check the correct level by means of the speci c indicator (Photo 3) and ll it up again, if necessary.

Using Rotoroil lubricants
It is recommended to use Mattei Rotoroil 8000 Lubricants.
The subsequent changes could be made at the forecasted intervals.
Should the machine have already worked for a long period with other oils, and should lacquers and deposits be present, then it is recommended to wash with Rotoroil 8000 F2/F4 for some 200 hours, so as to remove all residual impurities.
It is also recommended, when lling the machine up with new oil, to replace the oil lter and the ltering elements of the separator.

Lubricants are flammable products.

Observe the indications given on the containers !

During the disposal of exhausted lubricants it is necessary to comply with following environment protection rules:

• Lubricants may contaminate water and soil !
Never pour lubricants on the ground, into water, or in the sewerage system.
Any infringement of these rules can be legally prosecuted! When handling lubricants keep an oil agglomerative base near the working area.
• Recover the exhausted lubricants while separating the mineral based from synthetic lubricants. Upon disposal, please comply with current regulations concerning the disposal of exhausted oils.

Only the use of lubricants with suitable quality guarantees a safe operation of the machine.

It is forbidden to mix lubricants of a different quality, as their composition and additives are not the same.

This rule should be mainly applied to synthetic and mineral lubricant mixtures.

If other lubricants are to be used, it should be veri ed beforehand if the two products are compatible.
In case of doubts, the lubricant used up to that moment should be completely eliminated, by means of a washing procedure of the uid circuit.
To avoid any risk of contamination, the lubrication procedures should be carried out under “absolute cleanliness” conditions.
All manufacturers of lubricants mentioned in the table offer a technical information service that may answer all your questions on lubrication.

WARNING on lubricants

The correct use of suitable lubricants considerably helps to obtain the maximum performance and the elimination of failures.
During the handling of lubricants on equipments, it is essential to strictly comply with the following precautions, for sanitary protection:

- Avoid any prolonged, excessive or repeated contact of the skin with lubricating products as well as avoid inhalation of their vapours or fumes.
- Wear suitable clothing and protections to protect the skin (for instance overalls, eyeglasses or, as far as allowed by the safety rules, protection gloves) or apply a protective product.
- Clean dirty skin carefully by abundantly washing it with water and soap.
- Apply a skin cream after washing.
- Take out and change clothes and shoes soaked with oil.
- Never put oil soaked cloths in one’s pockets.

General

Several oils are available on the market and research continuously improves their characteristics and it changes the names and speci cations.
When the warranty period is over, during which the use of Mattei Rotoroil lubricant is compulsory, the user can decide to use the oil he believes most suitable or the available one, provided it is suitable for rotary vane compressors.
Only manufacturers of lubricants can recommend the most suitable oil for the kind of machine and for its speci c application.
The user should then purchase the lubricant from an oil company or a distributor that guarantees its suitability for the speci c use.
The cost of the best lubricant is a small percentage of the total running cost of the machine: it is suggested to purchase the best available on the market (see the section "**MATTEI LUBRICANTS**").
Please consider that in lubricated and injection cooled compressors the oil performs the listed tasks and it is subject to continuous working cycles; therefore, it should be highly resistant to oxidation to ensure long life.
The oil should also provide a good demulsivity.
Anti-oxidizing additives should provide low volatile substances at the compressor operating temperatures, so as to ensure protection between one oil lling and the other.
The user must adopt the kind of oil grade recommended by Mattei.
Please refer to the speci c table for the choice, according to the operating conditions.

Available oils on the market

There are several kinds of oils on the market, including:

- ❑ mineral based industrial oils;
- ❑ synthetic oils.

Mineral based industrial oils

These oils have been designed for different applications and also for some types of compressors.
In this case, too, there are standards specifying their features; please refer to DIN 51506 which classi es the oils as VB-L, VC-L e VD-L, according to their possibility of working at different temperatures.
The latter is suitable for high temperatures and it is resistant to oxidation caused by the continuous mixing with the air.
ISO 6743-3 classi es oils based on the operating temperature and pressure and, according to this rule, for rotary vane compressors ISO-L-DAH o DAJ oils are recommended, which are for medium and heavy applications.
The table indicates some typical values of the main characteristics."

Typical featuress of Industrial Oils	Measuring unit	Ambient temperature 5 ÷ 40	Ambient temperature -5 ÷ 30
Viscosity ISO VG	---	150	100
Viscosity at 40°	cSt	135 ÷ 165	90 ÷ 105
Viscosity at 100°	cSt	14 ÷ 16	10 ÷ 12
Viscosity Index		93 ÷ 100	100 ÷ 110
Pour point	°C	-10 ÷ -5	-15 ÷ -10
Flash point V.A.	°C	230 ÷ 265	250 ÷ 265
Volumes mass	Kg/m³	940 ÷ 960	940 ÷ 960

Values in the Table are merely indicative

Synthetic oils

Many synthetic oils with different basis are available on the market (esters, glycols, etc) that sometimes have proved to be suitable and provide a longer life than mineral oils.
Normally they reduce carbon deposits, provide a high self-ignition temperature and are remarkably resistant to oxidation.
As synthetic lubricants are good detergents, to change the kind of lubricant in a machine and pass from a conventional mineral based to a synthetic one, it is necessary to carry out a thorough washing, following the supplier's instructions, to avoid damages to the machine if dirt, residues and deposits circulate.
It is also necessary to pay attention to condensate, as usually synthetic lubricants are more sensitive to water washing and their thin lm may not provide enough protection against rust.
This problem can be worsened if the compressor is not working continuously, but occasionally.
In this case, even though not suggesting its use, any responsibility for the choice is up to the user and to the lubricant supplier.

098

WARNING !!!
It is difficult to determine life of an oil, as there are different parameters affecting the same, among which the operating temperature and quality of the intake air are very important.
For this reason it is recommended to obtain precise guarantees from the supplier, validated by the analysis of samples taken from the machine, to determine the suitability of lubricant and its life.

MATTEI LUBRICANTS

Considering the important role of lubricant for operation of the compressor, Mattei offers special lubricants to the users and recommends their use.

These are:

- **Mattei Rotoroil 8000 F2 (synthetic),**
- **Mattei Rotoroil 8000 F4 (synthetic),**
- **Mattei Rotoroil 8000 FG (synthetic, non toxic)**

available in 2, 5 and 25 litres cans.

Their life can reach the hours shown in the table, depending on the operating temperature and conditions of the intake air.

MATTEI LUBRICANTS

Name	Ambient temperature	Operating hours (max.)
Rotoroil 8000 F2	From - 15° a + 45 °C	5000
Rotoroil 8000 F4	From - 30° a + 30 °C	5000
Rotoroil 8000 FG	From - 5° a + 40 °C	1000

Safety Precautions

There is a latent risk of re in almost all compressed air systems and ISO 5388 Standard explains the reasons.
In fact, in compressed air systems both oxygen and oil are always present and are combustible.
Should for any reason oil vapours form, these could burn in presence of a ame; an ignition source may start a re in case of use of excessive or unsuitable oil, or when neglecting maintenance.
Faulty maintenance has been mentioned, because a dirty radiator may cause a temperature rise, often quickly, which leads to oil damage and to the creation of deposits.
Such processes are accelerated if unsuitable oil is used.
Based on experience, res are almost never caused by the fact that the oil self-ignition temperature is reached (340-400 °C).
Usually the cause is that the oil, while decomposing, creates carbon residues that when in contact with air and high temperature, continue to oxidize and, under special conditions, may ignite. So it is essential to use suitable lubricants and carry out correct maintenance.

860

WARNING !!!

It is opportune that to prevent the risk of fires the best attention is given to the oil choice and to execution of all maintenance operations, and specifically:

- carry out regular and complete oil changes;
- ascertain that the coolling system is always ef cient, with often checks to the oil temperature;
- verify that protecting devices installed are always in perfect working order;
- keep the oil consumption under control;
- take care of the machine cleaning.

Storage and treatment of oils

Usually lubricant containers are built so as to prevent any contamination.
When the user receives the lubricant, it is under his responsibility to avoid damages or pollution to the same.

The lubricant may get damaged due to:

- dust and dirt;
- condensate, mainly due to absorbing humidity from the air;
- extreme temperatures;
- mixing with other oil types.

Please note that dirt in the oil reduces its ef ciency and causes wear of those parts it comes into contact with, therefore there is the need to increase maintenance.
Instead, condensate cancels the effect of some additives, often present in very limited quantities.
Oil containers should be stored in protected rooms, avoiding exposure to extreme temperatures.

860

WARNING !!!

Absolutely avoid the mixing of oils of a different grade and quality .
Although looking alike, they could not be compatible.
Also beware of oil leaks, not only being a waste, but also polluting, causing falls or injuries to people and also fires.

General

As mentioned in the section dedicated to protections, the command and control board controls the smooth operation of the compressor. It is possible that, due to the incorrect use of the machine, or incorrect maintenance or unforeseen conditions, etc., malfunctions occur and that
only their effects are indicated. The table below aims at helping the operator solve some dif culties should they arise while indicating their possible causes.

Problem - Cause - Solution

Below some possible failures are indicated with their causes and how to identify the correct solution.

PROBLEM	CAUSE	SOLUTION
A. Start MAESTRO^{XS} works, start is allowed but the star/triangle commutation does not take function correctly	The power supply line is insuf cient and the excessive drop of voltage following the start provokes the contactors to be released.	Check for the correct size of the supply line. Please refer to the “Installation, Use, and Maintenance Manual” in Section 4. Contact the nearest authorized service center.
MAESTRO^{XS} works, it enables the start by turning green LED on, but the compressor does not start.	Pressure inside the compressor is higher than the maximum tolerated value for the start: or for an abnormal return of the network air, or because the pressure transducer reads an incorrect value.	Check the inner pressure on the pressure gauge of the separator body and compare it with the value given by MAESTRO^{XS}. Verify the correct operation of the pressure detection system: transducer, collector and switching solenoid valves. Contact the nearest authorized service center.
	The hour programming has been enabled.	
	The compressor runs within a network with other compressors.	
B. Pressure The network pressure does not reach the required value.	The servo valve has not been correctly gauged.	Verify the setting. Contact the nearest authorized service center.
	The condensate drain solenoid valve is blocked in the open position (Optional kit separator/condensate drain).	Clean the specific filter to remove the cause of the block and then check operation. Please refer to the “Installation, Use, and Maintenance Manual”, Section 12.
	The minimum pressure valve does not function correctly.	Verify the operation. Contact the nearest authorized service center.
	Suction lter clogged.	Replace the lter. Please refer to the “Installation, Use, and Maintenance Manual” , Section 7.
	Request for air greater than the compressor maximum capacity.	Please refer to the Sales Organization of Ing. Enea Mattei S.p.A. to study equipment improvement..
The inner pressure exceeds the set value.	The servo valve has not been gauged correctly and/or the setting of the maximum pressure value in the [BASIC PROGRAM.] menu is incorrect.	Verify both the servo valve and the correct setting of operating parameters. Please refer to the “Installation, Use, and Maintenance Manual”, Sections 5 and 6.

PROBLEM	CAUSE	SOLUTION
C. Oil Excessive oil consumption; the level lowers too quickly; oil is detected within the network.	The filters of the oil return valves are clogged.	Replace lters and verify the causes of the clogging. (see Section 7)
D. Temperature The compressor stops due to its own over-heating.	The radiator or the lter of the cooling air is dirty; the environmental temperature is excessive for the compressor operation.	Verify the cause and remove the problem. (see Section 7)
The compressor stops due to the over-heating of the motor.	Excessive working pressure.	Verify the setting and re-set to the value foreseen for the machine. (see Section 7)
	The main motor cooling is insuf cient; the motor sucks too little air or too much warm air.	Verify the environmental conditions and the condition of the ltering panel. (see Sections 3 and 7)

General

The electric motor characteristics are given on the nameplate xed to the motor itself, and speci cally:

1. Model
2. Serial number
3. Protection degree
4. Insulation class
5. Maximum ambient temperature
6. Service
7. Service factor
8. Supply voltage [V]
9. Frequency [Hz]
10. Speed [rpm1]
11. Power [kW]
12. Power factor [cos _]
13. Rated intensity [A]
14. Motor weight
15. Type of bearings (front and rear)

Lubrication
The same plate also indicates the type of bearings mounted, for which it is recommended to use lithium based grease for lubrication.
Greasing (where necessary) should be carried out when the motor is running.
The lubrication intervals should never be longer than the solar year.

Cooling
The motor is equipped with a cover and fan, to guarantee proper cooling. Check that dirt does not form on this cover as it could reduce the cooling air passage.

Abnormal noises
Any vibration or abnormal noise is usually due to deterioration of the bearings. In this case it is recommended to replace the bearings rather than risking more serious problems to the motor or the machine.

Electrical checks
If the machine has been stored for a long period or in case of long stops in damp places, it is suggested to measure the winding insulation value by applying 500 V d.c. voltage for 60 seconds.
The insulation should be at least 10 MΩ (MegaOhms) in warm conditions or 100 MΩ in cold conditions.
Should these values not be detected and in case the motor has been exposed to damp, it is suggested to dry it for 24 hours in a furnace at 100-110 °C.
If no furnaces are available, please contact the manufacturer.

860

WARNING !!!
Before starting the machine, verify that the nuts locking the terminals of the power supply wires are well tightened.

Storage

The compressor is protected against corrosion and deterioration for the shipment period and for a relatively short (3 months) period of storage.
For any longer periods, please contact the manufacturer, while considering that the maximum time of 24 months.
However, it is suggested to keep the machine in a dry place, protected from atmospheric agents.
In case of damp climates, to protect both the electrical and the mechanical parts, the machine should be kept in a heated room or closed in a barrier- bag with heaters or light bulbs.
For the motor speci cally, please refer to that which has been indicated on the winding insulation.

Decommissioning

Decommissioning the machine does not imply special precautions but for the collection of the oil contained in the machine and the lubrication system components, i.e. the oil lter and the oil-air separators.

WARNING !!!

098

Both these elements and the oil should be collected and dumped in compliance with the current regulations on the environment in order to avoid any pollution and danger of fire.

Dismantling

Once the machine has reached the end of its technical and operating life, it can be demolished, i.e. decommissioned and put in such a condition so as not to be used any longer for the purposes it was designed and built, with the possible recycling of raw materials.

NOTE
Ing. ENEA MATTEI S.p.A. denies all responsibility for damage to people or things that may derive from the recycling of individual parts of the machine for functions or assembly situations different from the original ones.
Ing. ENEA MATTEI S.p.A. declines any acknowledgement, be it implicit or explicit, of the suitability to speci c purposes of parts of the machine reused after the nal dismantling the machine.

WARNING
The operations of deactivation and dismantling of the machine should be entrusted only to duly trained and equipped staff.

To deactivate the machine permanently, apply the following procedure:
- Drain the oil from the tank.
- Disconnect the machine from the power supply and pneumatic feed systems.
- Lift the machine with proper lifting apparatus.
- Remove the machine from its main components
- Block all moving parts of the machine.
- Dump all the machine components in controlled dumping sites

Residual risks after deactivation
After deactivating the machine, if all moving parts have been duly blocked, no residual risks exist.

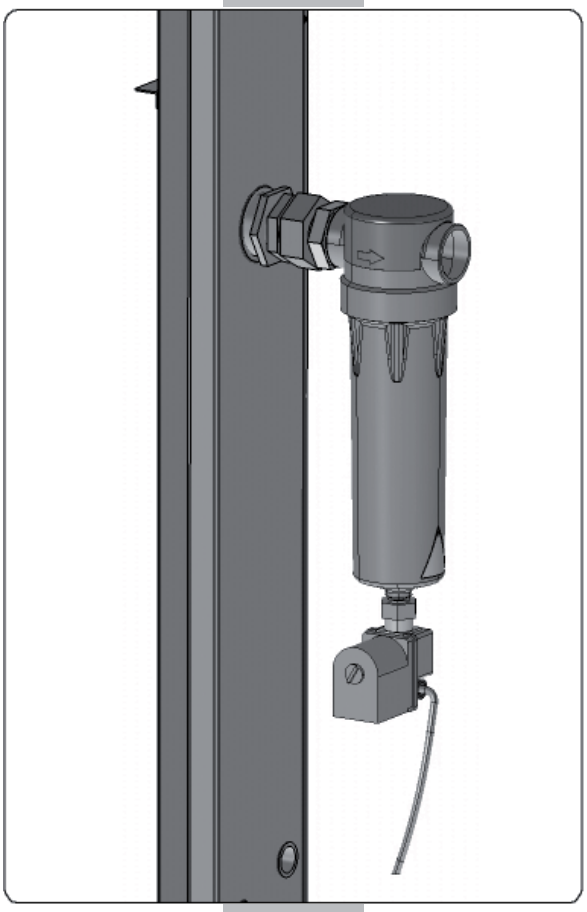

079

024

101

Cleaning the drain solenoid valve filter

Unscrew the connection and remove the drain solenoid valve.
Withdraw the solenoid valve lter using beak pliers, remove any dirt and wash with detergent.
Re-assemble in the reverse order while paying special attention to the position of the solenoid valve seal.

023

mattei®

Form to request Technical Service

M.T.A. S.P.A. MECCANICA TECNICA ASSISTENZA
Corso Italia, 47 – 24049 VERDELLO - ZINGONIA (Bergamo) - Italy
TEL: +39 - 035/4186400 (Ric.Aut.) FAX: +39 - 035/4186490
e-mail: info@mta.bg.it
C.P. N° 69 Zingonia

Company _____

Address _____

Please note our request for intervention for our machine :

Modell _____ Serial Number _____

Intervention to be carried out at :

Contact Person _____

Telephone _____

Failure	**Description**
Electrical	_____
	_____
	_____
	_____
	_____
	_____
Mechanical	_____
	_____
	_____
	_____
	_____
	_____

Notes _____

_____

_____

On *(date)* _____ li, _____

Stamp and Signature

mattei®

Form to request spare parts

M.T.A. S.P.A. MECCANICA TECNICA ASSISTENZA
Corso Italia, 47 – 24049 VERDELLO - ZINGONIA (Bergamo) - Italy
TEL: +39 - 035/4186400 (Ric.Aut.) FAX: +39 - 035/4186490
e-mail: info@mta.bg.it
C.P. N° 69 Zingonia

Company _____

Address _____

Please note our order no. _____ of _____ cwith required delivery on _____ for our machine :

Modell _____ Serial Number _____

Reference	Description	Quantity

Notes _____

On *(date)*_____ li, _____

Stamp and Signature

Parts to be replaced during maintenance

DESCRIPTION	CODE	COMPONENTS	QUANTITY
Maintenance Kit	IF57A22422	Air lter	1
		Air lter seal	1
		Oil return valve	2
		Oil return valve OR-ring	2
		Oil plug seal	2
		Oil lter OR-ring	2
		Oil lter	1
Separator oil kit	IF57A22421	Washer	3
		O-ring	6
		Separator	3
		O-ring	2
		O-ring	1
		O-ring	1
		Oil return valve	2
		Oil return valve O-ring	2
Pre lters	C098024079	Pre lter	1

Lubrificanti Mattei ROTOROIL 8000

COMPONENT	CODE	DESCRIPTION	QUANTITAY
Oil F2	BCL06FC002	Can	2 liters
	BCL06FC005	Can	5 liters
	BCL06FC025	Can	25 liters
Oil F4	BCL06SC002	Can	2 liters
	BCL06SC005	Can	5 liters
	BCL06SC025	Can	25 liters
Oil FG	BCL06AC002	Can	2 liters
	BCL06AC005	Can	5 liters
	BCL06AC025	Can	25 liters

mattei® BEST SOLUTIONS IN COMPRESSED AIR	DESIGN DATA **SERIE 1000** *SCHEDA TECNICA*		
TYPE / TIPO		**AC 15 / AC 15 *plus***	
VERSION / *VERSIONE*		**L**	**H** / **HH**
Air end nominal pressure [bar(g)] *Pressione nom. unità di compressione*		8	10 / 13

			L	H	HH
PERFORMANCES / *PRESTAZIONI*					
		bar (g)			
Air delivery / *Portata effettiva*	**[l/min]**	5	2750	-	-
Terminal power / *Potenza ai morsetti* (2)	**[kW]**		15,85		
	[l/min]	6	2740	2260	-
	[kW]		17,27	14,75	
	[l/min]	7	2710	2240	-
	[kW]		18,65	15,93	
	[l/min]	**7,5 (1)**	**2700**	2230	-
	[kW]		**19,3**	16,49	
	[l/min]	8	-	2220	1910
	[kW]			17,05	16,02
	[l/min]	9	-	2210	1900
	[kW]			18,07	17,01
	[l/min]	**9,5**	-	**2200**	1895
	[kW]			**18,4**	17,28
	[l/min]	10	-	-	1890
	[kW]				17,81
	[l/min]	11	-	-	1880
	[kW]				18,52
	[l/min]	12	-	-	1875
	[kW]				19,07
	[l/min]	**12,5**	-	-	**1870**
	[kW]				**19,22**
Off load power / *Potenza assorbita a vuoto*		[kW]	3,38		
Sound pressure level **(3) (6)** / *Livello pressione acustica* **(3) (6)**		[dB(A)]	67		
REFERENCE CONDITION / *CONDIZIONI DI RIFERIMENTO*					
Intake pressure / *Pressione d'aspirazione*		[bar(a)]	1		
Intake temperature / *Temperatura aspirazione*		[°C]	20		
Relative humidity / *Umidità relativa*		%	0		
Nominal motor speed / *Velocità nominale motore*		[g/1']	1500		
ELECTRICAL CHARACTERISTICS / *CARATTERISTICHE ELETTRICHE*					
Motor rated power / *Potenza nominale motore*		[kW]	15		
Voltage **(4)** - Frequency / *Tensione* **(4)** - *Frequenza*		[V/Hz]	230/50 or / oppure 400/50		
Enclosure-Insulation class / *Grado prot.-Classe isolamento*			IP55-F		
Electric starting / *Tipo avviamento*			Star delta / *stella triangolo*		
Fan rated power **(6)** / *Potenza assorbita vent.* **(6)**		[kW]	--		
Auxiliary circuit voltage / *Tensione circuito ausiliario*		[V]	110		
Supply min wire section / *Sez. min cavo alimentazione*		[mm2]	25 or / oppure 10 (x 10 m)		
TYPE OF REGULATION / *TIPO DI REGOLAZIONE*					
Modulation / *Modulazione*			intake proportional valve / *valvola aspirazione proporzionale*		
On load, off load and stop / *Marcia a carico, a vuoto e arresto*			pressureswitch / *controllo pressostatico*		
On load, off load / *Marcia a carico, a vuoto*			pressureswitch / *controllo pressostatico*		
DRYER / *ESSICCATORE* (only Plus / *Solo Plus*)					
Absorbed power / *Potenza assorbita*		[kW]	1,05		
Gas			R 404 A		
Nominal dew point / *Punto di rugiada nominale*		[°C]	3		
OTHERS / *VARIE*					
Allowable ambient temperature / *Temp. Amb. min-max*		[°C]	+1 / +40		
Outlet air temperature **(5)** / *Temperatura uscita aria* **(5)**					
AC version / *Versione AC*	plus version / *Versione plus*	[°C]	≤ 30	20	
min-max oil temperature / *Temperatura min e max olio*		[°C]	80÷110		
Cooling air flow rate **(6)** / *Portata aria di raffreddamento* **(6)**		[m3/h]	70		
Fan residual head **(6)** / *Prevalenza residua ventilatore* **(6)**		[Pa]	20		
Total recoverable heat / *Calore totale recuperabile*		%	~ 95		
Oil system capacity / *Capacità circuito olio*		[l]	10		
Oil carry over / *Residuo olio nell'aria compressa*		[ppm]	≤ 3		
Air outlet size / *Attacco uscita aria*			Rp 1"		
Condensate drain outlet size / *Attacco scarico di condensa*			--		
plus version / *versione plus*			2 x Rp ¼		
with condensate sep. KIT **(7)** / *con KIT separ. condensa* **(7)**			ø 10		
Water inlet-outlet size / *Attacco ingresso-uscita acqua*			--		
With heat recovery kit **(7)** / *con KIT recupero calore* **(7)**			2 x Rp ½		
LxWxH / LxLxA		[mm]	1510 x 800 x 1200		
Weight with oil / *Peso con olio*	AC / AC *plus*	[kg]	450	490	

(1)= According to ISO 1217 (annex "C") / *Secondo ISO 1217 (annesso "C")*

(2)= Whitout dryer power (only Plus version) / *Esclusa potenza essiccatore (versioni Plus)*

(3)= According to PN8NTC2.3 measured at 1m distance / *Secondo PN8NTC2.3 misurato alla distanza di 1m*

(4)= According to CEI 38 / *Secondo CEI 38*

(5)= According to reference conditions indicated / *Alle condizioni di riferimento indicate*

(6)= Frequency 50 Hz / *Frequenza 50 Hz*

(7)= Optional / *Opzionale*

mattei® BEST SOLUTIONS IN COMPRESSED AIR	DESIGN DATA **SERIE 1000** *SCHEDA TECNICA*		
TYPE / TIPO		**AC 15 / AC 15 *plus***	
VERSION / *VERSIONE*		**LX**	**HX**
Air end nominal pressure [bar(g)] *Pressione nom. unità di compressione*		8	10

PERFORMANCES / *PRESTAZIONI*					
		bar (g)			
Air delivery / *Portata effettiva*	**[l/min]**	5	3070	-	
Terminal power / *Potenza ai morsetti* (2)	**[kW]**		18,15		
	[l/min]	6	3050	2720	
	[kW]		19,77	17,96	
	[l/min]	7	3020	2700	
	[kW]		21,35	19,39	
	[l/min]	**7,5 (1)**	**3010**	2690	
	[kW]		**22,1**	20,07	
	[l/min]	8	-	2680	
	[kW]			20,75	
	[l/min]	9	-	2660	
	[kW]			21,99	
	[l/min]	**9,5**	-	**2650**	
	[kW]			**22,4**	
	[l/min]	10	-	-	
	[kW]				
	[l/min]	11	-	-	
	[kW]				
	[l/min]	12	-	-	
	[kW]				
	[l/min]	**12,5**	-	-	
	[kW]				
Off load power / *Potenza assorbita a vuoto*		[kW]	3,38		
Sound pressure level **(3) (6)** / *Livello pressione acustica* **(3) (6)**		[dB(A)]	69		
REFERENCE CONDITION / *CONDIZIONI DI RIFERIMENTO*					
Intake pressure / *Pressione d'aspirazione*		[bar(a)]	1		
Intake temperature / *Temperatura aspirazione*		[°C]	20		
Relative humidity / *Umidità relativa*		%	0		
Nominal motor speed / *Velocità nominale motore*		[g/1']	1750		
ELECTRICAL CHARACTERISTICS / *CARATTERISTICHE ELETTRICHE*					
Motor rated power / *Potenza nominale motore*		[kW]	15		
Voltage **(4)** - Frequency / *Tensione* **(4)** - *Frequenza*		[V/Hz]	230/60 or / oppure 460/60		
Enclosure-Insulation class / *Grado prot.-Classe isolamento*			IP55-F		
Electric starting / *Tipo avviamento*			Star delta / *stella triangolo*		
Fan rated power **(6)** / *Potenza assorbita vent.* **(6)**		[kW]	--		
Auxiliary circuit voltage / T*ensione circuito ausiliario*		[V]	110		
Supply min wire section / *Sez. min cavo alimentazione*		[mm2]	25 or / oppure 10 (x 10 m)		
TYPE OF REGULATION / *TIPO DI REGOLAZIONE*					
Modulation / *Modulazione*			intake proportional valve / *valvola aspirazione proporzionale*		
On load, off load and stop / *Marcia a carico, a vuoto e arresto*			pressureswitch / *controllo pressostatico*		
On load, off load / *Marcia a carico, a vuoto*			pressureswitch / *controllo pressostatico*		
DRYER / *ESSICCATORE* (Only plus / *Solo plus*)					
Absorbed power / *Potenza assorbita*		[kW]	--		
Gas			R 404 A		
Nominal dew point / *Punto di rugiada nominale*		[°C]	3		
OTHERS / *VARIE*					
Allowable ambient temperature / *Temp. Amb. min-max*		[°C]	+1 / +40		
Outlet air temperature **(5)** / *Temperatura uscita aria* **(5)**					
AC version / *Versione AC*	plus version / *Versione plus*	[°C]	≤ 30	20	
min-max oil temperature / *Temperatura min e max olio*		[°C]	80÷110		
Cooling air flow rate **(6)** / *Portata aria di raffreddamento* **(6)**		[m3/h]	77		
Fan residual head **(6)** / *Prevalenza residua ventilatore* **(6)**		[Pa]	20		
Total recoverable heat / *Calore totale recuperabile*		%	~ 95		
Oil system capacity / *Capacità circuito olio*		[l]	10		
Oil carry over / *Residuo olio nell'aria compressa*		[ppm]	≤ 3		
Air outlet size / *Attacco uscita aria*			Rp 1"		
Condensate drain outlet size / *Attacco scarico di condensa*			--		
plus version / *versione plus*			2 x Rp ¼		
with condensate sep. KIT **(7)** / *con KIT separ. condensa* **(7)**			ø 10		
Water inlet-outlet size / *Attacco ingresso-uscita acqua*			--		
With heat recovery kit **(7)** / *con KIT recupero calore* **(7)**			2 x Rp ½		
LxWxH / LxLxA		[mm]	1510 x 800 x 1200		
Weight with oil / *Peso con olio* AC	AC *plus*	[kg]	450	490	

(1)= According to ISO 1217 (annex "C") / *Secondo ISO 1217 (annesso "C")*

(2)= Whitout dryer power (only Plus version) / *Esclusa potenza essiccatore (versioni Plus)*

(3)= According to PN8NTC2.3 measured at 1m distance / *Secondo PN8NTC2.3 misurato alla distanza di 1m*

(4)= According to CEI 38 / *Secondo CEI 38*

(5)= According to reference conditions indicated / *Alle condizioni di riferimento indicate*

(6)= Frequency 60 Hz / *Frequenza 60 Hz*

(7)= Optional / *Opzionale*

mattei® BEST SOLUTIONS IN COMPRESSED AIR	DESIGN DATA **SERIE 1000** *SCHEDA TECNICA*		
TYPE / TIPO		**AC 18 / AC 18 *plus***	
VERSION / *VERSIONE*		**L**	**H**	**HH**
Air end nominal pressure [bar(g)] *Pressione nom. unità di compressione*		8	10	13

PERFORMANCES / *PRESTAZIONI*					
		bar (g)			
Air delivery / *Portata effettiva*	**[l/min]**	5	3340	-	-
Terminal power / *Potenza ai morsetti* (2)	**[kW]**		19,05		
	[l/min]	6	3320	2710	-
	[kW]		20,76	17,08	
	[l/min]	7	3290	2690	-
	[kW]		22,42	18,44	
	[l/min]	**7,5 (1)**	**3280**	2680	-
	[kW]		**23,2**	19,09	
	[l/min]	8	-	2670	2310
	[kW]			19,73	18,67
	[l/min]	9	-	2650	2300
	[kW]			20,91	19,82
	[l/min]	**9,5**	-	**2640**	2290
	[kW]			**21,3**	20,13
	[l/min]	10	-	-	2280
	[kW]				20,76
	[l/min]	11	-	-	2270
	[kW]				21,58
	[l/min]	12	-	-	2262
	[kW]				22,22
	[l/min]	**12,5**	-	-	**2260**
	[kW]				**22,4**
Off load power / *Potenza assorbita a vuoto*		[kW]	4,09		
Sound pressure level **(3) (6)** / *Livello pressione acustica* **(3) (6)**		[dB(A)]	67		

REFERENCE CONDITION / *CONDIZIONI DI RIFERIMENTO*		
Intake pressure / *Pressione d'aspirazione*	[bar(a)]	1
Intake temperature / *Temperatura aspirazione*	[°C]	20
Relative humidity / *Umidità relativa*	%	0
Nominal motor speed / *Velocità nominale motore*	[g/1']	1500

ELECTRICAL CHARACTERISTICS / *CARATTERISTICHE ELETTRICHE*		
Motor rated power / *Potenza nominale motore*	[kW]	18,5
Voltage **(4)** - Frequency / *Tensione* **(4)** - *Frequenza*	[V/Hz]	230/50 or / oppure 400/50
Enclosure-Insulation class / *Grado prot.-Classe isolamento*		IP55-F
Electric starting / *Tipo avviamento*		Star delta / *stella triangolo*
Fan rated power **(6)** / *Potenza assorbita vent.* **(6)**	[kW]	--
Auxiliary circuit voltage / T*ensione circuito ausiliario*	[V]	110
Supply min wire section / *Sez. min cavo alimentazione*	[mm2]	25 or / oppure 10 (x 10 m)

TYPE OF REGULATION / *TIPO DI REGOLAZIONE*		
Modulation / *Modulazione*		intake proportional valve / *valvola aspirazione proporzionale*
On load, off load and stop / *Marcia a carico, a vuoto e arresto*		pressureswitch / *controllo pressostatico*
On load, off load / *Marcia a carico, a vuoto*		pressureswitch / *controllo pressostatico*

DRYER / *ESSICCATORE* (Only plus / *Solo plus*)		
Absorbed power / *Potenza assorbita*	[kW]	1,05
Gas		R 404 A
Nominal dew point / *Punto di rugiada nominale*	[°C]	3

OTHERS / *VARIE*				
Allowable ambient temperature / *Temp. Amb. min-max*		[°C]	+1 / +40	
Outlet air temperature **(5)** / *Temperatura uscita aria* **(5)**				
AC version / *Versione AC*	plus version / *Versione plus*	[°C]	≤ 30	20
min-max oil temperature / *Temperatura min e max olio*		[°C]	80÷110	
Cooling air flow rate **(6)** / *Portata aria di raffreddamento* **(6)**		[m3/h]	70	
Fan residual head **(6)** / *Prevalenza residua ventilatore* **(6)**		[Pa]	20	
Total recoverable heat / *Calore totale recuperabile*		%	~ 95	
Oil system capacity / *Capacità circuito olio*		[l]	10	
Oil carry over / *Residuo olio nell'aria compressa*		[ppm]	≤ 3	
Air outlet size / *Attacco uscita aria*			Rp 1"	
Condensate drain outlet size / *Attacco scarico di condensa*			--	
plus version / *versione plus*			2 x Rp ¼	
with condensate sep. KIT **(7)** / *con KIT separ. condensa* **(7)**			ø 10	
Water inlet-outlet size / *Attacco ingresso-uscita acqua*			--	
With heat recovery kit **(7)** / *con KIT recupero calore* **(7)**			2 x Rp ½	
LxWxH / LxLxA		[mm]	1510 x 800 x 1200	
Weight with oil / *Peso con olio* AC	AC *plus*	[kg]	450	490

(1)= According to ISO 1217 (annex "C") / *Secondo ISO 1217 (annesso "C")*

(2)= Whitout dryer power (only Plus version) / *Esclusa potenza essiccatore (versioni Plus)*

(3)= According to PN8NTC2.3 measured at 1m distance / *Secondo PN8NTC2.3 misurato alla distanza di 1m*

(4)= According to CEI 38 / *Secondo CEI 38*

(5)= According to reference conditions indicated / *Alle condizioni di riferimento indicate*

(6)= Frequency 50 Hz / *Frequenza 50 Hz*

(7)= Optional / *Opzionale*

mattei® BEST SOLUTIONS IN COMPRESSED AIR	DESIGN DATA **SERIE 1000** *SCHEDA TECNICA*		
TYPE / TIPO		**AC 18 / AC 18 *plus***	
VERSION / *VERSIONE*		**LX**	**HX**
Air end nominal pressure [bar(g)] *Pressione nom. unità di compressione*		8	10

PERFORMANCES / *PRESTAZIONI*					
		bar (g)			
Air delivery / *Portata effettiva*	**[l/min]**	5	3740	-	
Terminal power / *Potenza ai morsetti* (2)	**[kW]**		21,76		
	[l/min]	6	3720	3270	
	[kW]		23,71	20,76	
	[l/min]	7	3685	3240	
	[kW]		25,60	22,42	
	[l/min]	**7,5 (1)**	**3670**	3225	
	[kW]		**26,5**	23,21	
	[l/min]	8	-	3210	
	[kW]			23,99	
	[l/min]	9	-	3190	
	[kW]			25,43	
	[l/min]	**9,5**	-	**3180**	
	[kW]			**25,9**	
	[l/min]	10	-	-	
	[kW]				
	[l/min]	11	-	-	
	[kW]				
	[l/min]	12	-	-	
	[kW]				
	[l/min]	**12,5**	-	-	
	[kW]				
Off load power / *Potenza assorbita a vuoto*		[kW]	4,09		
Sound pressure level **(3) (6)** / *Livello pressione acustica* **(3) (6)**		[dB(A)]	69		
REFERENCE CONDITION / *CONDIZIONI DI RIFERIMENTO*					
Intake pressure / *Pressione d'aspirazione*		[bar(a)]	1		
Intake temperature / *Temperatura aspirazione*		[°C]	20		
Relative humidity / *Umidità relativa*		%	0		
Nominal motor speed / *Velocità nominale motore*		[g/1']	1750		
ELECTRICAL CHARACTERISTICS / *CARATTERISTICHE ELETTRICHE*					
Motor rated power / *Potenza nominale motore*		[kW]	18,5		
Voltage **(4)** - Frequency / *Tensione* **(4)** - *Frequenza*		[V/Hz]	230/60 or / oppure 460/60		
Enclosure-Insulation class / *Grado prot.-Classe isolamento*			IP55-F		
Electric starting / *Tipo avviamento*			Star delta / *stella triangolo*		
Fan rated power **(6)** / *Potenza assorbita vent.* **(6)**		[kW]	--		
Auxiliary circuit voltage / T*ensione circuito ausiliario*		[V]	110		
Supply min wire section / *Sez. min cavo alimentazione*		[mm2]	25 or / oppure 10 (x 10 m)		
TYPE OF REGULATION / *TIPO DI REGOLAZIONE*					
Modulation / *Modulazione*			intake proportional valve / *valvola aspirazione proporzionale*		
On load, off load and stop / *Marcia a carico, a vuoto e arresto*			pressureswitch / *controllo pressostatico*		
On load, off load / *Marcia a carico, a vuoto*			pressureswitch / *controllo pressostatico*		
DRYER / *ESSICCATORE* (Only plus / *Solo plus*)					
Absorbed power / *Potenza assorbita*		[kW]	--		
Gas			R 404 A		
Nominal dew point / *Punto di rugiada nominale*		[°C]	3		
OTHERS / *VARIE*					
Allowable ambient temperature / *Temp. Amb. min-max*		[°C]	+1 / +40		
Outlet air temperature **(5)** / *Temperatura uscita aria* **(5)**					
AC version / *Versione AC*	plus version / *Versione plus*	[°C]	≤ 30	20	
min-max oil temperature / *Temperatura min e max olio*		[°C]	80÷110		
Cooling air flow rate **(6)** / *Portata aria di raffreddamento* **(6)**		[m3/h]	77		
Fan residual head **(6)** / *Prevalenza residua ventilatore* **(6)**		[Pa]	20		
Total recoverable heat / *Calore totale recuperabile*		%	~ 95		
Oil system capacity / *Capacità circuito olio*		[l]	10		
Oil carry over / *Residuo olio nell'aria compressa*		[ppm]	≤ 3		
Air outlet size / *Attacco uscita aria*			Rp 1"		
Condensate drain outlet size / *Attacco scarico di condensa*			--		
plus version / *versione plus*			2 x Rp ¼		
with condensate sep. KIT **(7)** / *con KIT separ. condensa* **(7)**			ø 10		
Water inlet-outlet size / *Attacco ingresso-uscita acqua*			--		
With heat recovery kit **(7)** / *con KIT recupero calore* **(7)**			2 x Rp ½		
LxWxH / LxLxA		[mm]	1510 x 800 x 1200		
Weight with oil / *Peso con olio* AC	AC *plus*	[kg]	450	490	

(1)= According to ISO 1217 (annex "C") / *Secondo ISO 1217 (annesso "C")*

(2)= Whitout dryer power (only Plus version) / *Esclusa potenza essiccatore (versioni Plus)*

(3)= According to PN8NTC2.3 measured at 1m distance / *Secondo PN8NTC2.3 misurato alla distanza di 1m*

(4)= According to CEI 38 / *Secondo CEI 38*

(5)= According to reference conditions indicated / *Alle condizioni di riferimento indicate*

(6)= Frequency 60 Hz / *Frequenza 60 Hz*

(7)= Optional / *Opzionale*

mattei® BEST SOLUTIONS IN COMPRESSED AIR	DESIGN DATA **SERIE 1000** *SCHEDA TECNICA*		

TYPE / TIPO			**AC 22 / AC 22 *plus***		
VERSION / *VERSIONE*			**L**	**H**	**HH**
Air end nominal pressure [bar(g)] *Pressione nom. unità di compressione*			8	10	13
PERFORMANCES / *PRESTAZIONI*					
		bar (g)			
Air delivery / *Portata effettiva*	**[l/min]**	5	3820	-	-
Terminal power / *Potenza ai morsetti* (2)	**[kW]**		21,27		
	[l/min]	6	3800	3290	-
	[kW]		23,17	20,68	
	[l/min]	7	3765	3260	-
	[kW]		25,02	22,34	
	[l/min]	**7,5 (1)**	**3750**	3250	-
	[kW]		**25,9**	23,12	
	[l/min]	8	-	3230	2630
	[kW]			23,90	19,75
	[l/min]	9	-	3210	2610
	[kW]			25,33	20,97
	[l/min]	**9,5**	-	**3200**	2605
	[kW]			**25,8**	21,30
	[l/min]	10	-	-	2600
	[kW]				21,96
	[l/min]	11	-	-	2580
	[kW]				22,83
	[l/min]	12	-	-	2575
	[kW]				23,51
	[l/min]	**12,5**	-	-	**2570**
	[kW]				**23,7**
Off load power / *Potenza assorbita a vuoto*		[kW]	5,03		
Sound pressure level **(3) (6)** / *Livello pressione acustica* **(3) (6)**		[dB(A)]	67		
REFERENCE CONDITION / *CONDIZIONI DI RIFERIMENTO*					
Intake pressure / *Pressione d'aspirazione*		[bar(a)]	1		
Intake temperature / *Temperatura aspirazione*		[°C]	20		
Relative humidity / *Umidità relativa*		%	0		
Nominal motor speed / *Velocità nominale motore*		[g/1']	1500		
ELECTRICAL CHARACTERISTICS / *CARATTERISTICHE ELETTRICHE*					
Motor rated power / *Potenza nominale motore*		[kW]	22		
Voltage **(4)** - Frequency / *Tensione* **(4)** - *Frequenza*		[V/Hz]	230/50 or / oppure 400/50		
Enclosure-Insulation class / *Grado prot.-Classe isolamento*			IP55-F		
Electric starting / *Tipo avviamento*			Star delta / *stella triangolo*		
Fan rated power **(6)** / *Potenza assorbita vent.* **(6)**		[kW]	--		
Auxiliary circuit voltage / *Tensione circuito ausiliario*		[V]	110		
Supply min wire section / *Sez. min cavo alimentazione*		[mm2]	35 or / oppure 16 (x 10 m)		
TYPE OF REGULATION / *TIPO DI REGOLAZIONE*					
Modulation / *Modulazione*			intake proportional valve / *valvola aspirazione proporzionale*		
On load, off load and stop / *Marcia a carico, a vuoto e arresto*			pressureswitch / *controllo pressostatico*		
On load, off load / *Marcia a carico, a vuoto*			pressureswitch / *controllo pressostatico*		
DRYER / *ESSICCATORE* (Only Plus / *Solo Plus*)					
Absorbed power / *Potenza assorbita*		[kW]	1,05		
Gas			R 404 A		
Nominal dew point / *Punto di rugiada nominale*		[°C]	3		
OTHERS / *VARIE*					
Allowable ambient temperature / *Temp. Amb. min-max*		[°C]	+1 / +40		
Outlet air temperature **(5)** / *Temperatura uscita aria* **(5)**					
AC version / *Versione AC*	plus version / *Versione plus*	[°C]	≤ 30	20	
min-max oil temperature / *Temperatura min e max olio*		[°C]	80÷110		
Cooling air flow rate **(6)** / *Portata aria di raffreddamento* **(6)**		[m3/h]	70		
Fan residual head **(6)** / *Prevalenza residua ventilatore* **(6)**		[Pa]	20		
Total recoverable heat / *Calore totale recuperabile*		%	~ 95		
Oil system capacity / *Capacità circuito olio*		[l]	10		
Oil carry over / *Residuo olio nell'aria compressa*		[ppm]	≤ 3		
Air outlet size / *Attacco uscita aria*			Rp 1"		
Condensate drain outlet size / *Attacco scarico di condensa*			--		
plus version / *versione plus*			2 x Rp ¼		
with condensate sep. KIT **(7)** / *con KIT separ. condensa* **(7)**			ø 10		
Water inlet-outlet size / *Attacco ingresso-uscita acqua*			--		
With heat recovery kit **(7)** / *con KIT recupero calore* **(7)**			2 x Rp ½		
LxWxH / LxLxA		[mm]	1510 x 800 x 1200		
Weight with oil / *Peso con olio* AC	AC *plus*	[kg]	450	490	

(1)= According to ISO 1217 (annex "C") / *Secondo ISO 1217 (annesso "C")*

(2)= Whitout dryer power (only Plus version) / *Esclusa potenza essiccatore (versioni Plus)*

(3)= According to PN8NTC2.3 measured at 1m distance / *Secondo PN8NTC2.3 misurato alla distanza di 1m*

(4)= According to CEI 38 / *Secondo CEI 38*

(5)= According to reference conditions indicated / *Alle condizioni di riferimento indicate*

(6)= Frequency 50 Hz / *Frequenza 50 Hz*

(7)= Optional / *Opzionale*

mattei® BEST SOLUTIONS IN COMPRESSED AIR	DESIGN DATA **SERIE 1000** *SCHEDA TECNICA*		

TYPE / TIPO			**AC 22 / AC 22 PLUS**		
VERSION / *VERSIONE*			**LX**	**HX**	
Air end nominal pressure [bar(g)] *Pressione nom. unità di compressione*			8	10	
PERFORMANCES / *PRESTAZIONI*					
		bar (g)			
Air delivery / *Portata effettiva*	**[l/min]**	5	4030	-	
Terminal power / *Potenza ai morsetti* (2)	**[kW]**		23,08		
	[l/min]	6	4000	3700	
	[kW]		25,14	23,57	
	[l/min]	7	3970	3670	
	[kW]		27,15	25,45	
	[l/min]	**7,5 (1)**	**3950**	3650	
	[kW]		**28,1**	26,35	
	[l/min]	8	-	3640	
	[kW]			27,24	
	[l/min]	9	-	3610	
	[kW]			28,87	
	[l/min]	**9,5**	-	**3600**	
	[kW]			**29,4**	
	[l/min]	10	-	-	
	[kW]				
	[l/min]	11	-	-	
	[kW]				
	[l/min]	12	-	-	
	[kW]				
	[l/min]	**12,5**	-	-	
	[kW]				
Off load power / *Potenza assorbita a vuoto*		[kW]	5,03		
Sound pressure level **(3) (6)** / *Livello pressione acustica* **(3) (6)**		[dB(A)]	69		
REFERENCE CONDITION / *CONDIZIONI DI RIFERIMENTO*					
Intake pressure / *Pressione d'aspirazione*		[bar(a)]	1		
Intake temperature / *Temperatura aspirazione*		[°C]	20		
Relative humidity / *Umidità relativa*		%	0		
Nominal motor speed / *Velocità nominale motore*		[g/1']	1750		
ELECTRICAL CHARACTERISTICS / *CARATTERISTICHE ELETTRICHE*					
Motor rated power / *Potenza nominale motore*		[kW]	22		
Voltage **(4)** - Frequency / *Tensione* **(4)** - *Frequenza*		[V/Hz]	230/60 or / oppure 460/60		
Enclosure-Insulation class / *Grado prot.-Classe isolamento*			IP55-F		
Electric starting / *Tipo avviamento*			Star delta / *stella triangolo*		
Fan rated power **(6)** / *Potenza assorbita vent.* **(6)**		[kW]	--		
Auxiliary circuit voltage / T*ensione circuito ausiliario*		[V]	110		
Supply min wire section / *Sez. min cavo alimentazione*		[mm2]	35 or / oppure 16 (x 10 m)		
TYPE OF REGULATION / *TIPO DI REGOLAZIONE*					
Modulation / *Modulazione*			intake proportional valve / *valvola aspirazione proporzionale*		
On load, off load and stop / *Marcia a carico, a vuoto e arresto*			pressureswitch / *controllo pressostatico*		
On load, off load / *Marcia a carico, a vuoto*			pressureswitch / *controllo pressostatico*		
DRYER / *ESSICCATORE* (Only Plus / *Solo Plus*)					
Absorbed power / *Potenza assorbita*		[kW]	--		
Gas			R 404 A		
Nominal dew point / *Punto di rugiada nominale*		[°C]	3		
OTHERS / *VARIE*					
Allowable ambient temperature / *Temp. Amb. min-max*		[°C]	+1 / +40		
Outlet air temperature **(5)** / *Temperatura uscita aria* **(5)**					
AC version / *Versione AC*	plus version / *Versione plus*	[°C]	≤ 30	20	
min-max oil temperature / *Temperatura min e max olio*		[°C]	80÷110		
Cooling air flow rate **(6)** / *Portata aria di raffreddamento* **(6)**		[m3/h]	77		
Fan residual head **(6)** / *Prevalenza residua ventilatore* **(6)**		[Pa]	20		
Total recoverable heat / *Calore totale recuperabile*		%	~ 95		
Oil system capacity / *Capacità circuito olio*		[l]	10		
Oil carry over / *Residuo olio nell'aria compressa*		[ppm]	≤ 3		
Air outlet size / *Attacco uscita aria*			Rp 1"		
Condensate drain outlet size / *Attacco scarico di condensa*					
plus version / *versione plus*			2 x Rp ¼		
with condensate sep. KIT **(7)** / *con KIT separ. condensa* **(7)**			ø 10		
Water inlet-outlet size / *Attacco ingresso-uscita acqua*					
With heat recovery kit **(7)** / *con KIT recupero calore* **(7)**			2 x Rp ½		
LxWxH / LxLxA		[mm]	1510 x 800 x 1200		
Weight with oil / *Peso con olio* AC	AC *plus*	[kg]	450	490	

(1)= According to ISO 1217 (annex "C") / *Secondo ISO 1217 (annesso "C")*

(2)= Whitout dryer power (only Plus version) / *Esclusa potenza essiccatore (versioni Plus)*

(3)= According to PN8NTC2.3 measured at 1m distance / *Secondo PN8NTC2.3 misurato alla distanza di 1m*

(4)= According to CEI 38 / *Secondo CEI 38*

(5)= According to reference conditions indicated / *Alle condizioni di riferimento indicate*

(6)= Frequency 60 Hz / *Frequenza 60 Hz*

(7)= Optional / *Opzionale*

mattei® BEST SOLUTIONS IN COMPRESSED AIR	DESIGN DATA **SERIE 1000** *SCHEDA TECNICA*		
TYPE / TIPO		**AC 30s / AC 30s *plus***	
VERSION / *VERSIONE*		H	HH
Air end nominal pressure [bar(g)] *Pressione nom. unità di compressione*		9,5	12,5

PERFORMANCES / *PRESTAZIONI*					
		bar (g)			
Portata effettiva / *Free air delivery* (1)	**[l/min]**	5		-	-
Potenza ai morsetti / *Terminal power (2)*	**[kW]**			-	-
	[l/min]	6		-	-
	[kW]			-	-
	[l/min]	7		4260	-
	[kW]			28	-
	[l/min]	**7,5**		4240	-
	[kW]			29	-
	[l/min]	8		4225	-
	[kW]			30	-
	[l/min]	9		4195	3600
	[kW]			31,5	28
	[l/min]	**9,5**		4185	3595
	[kW]			32,5	28,7
	[l/min]	10		-	3585
	[kW]			-	29
	[l/min]	11		-	3565
	[kW]			-	30,5
	[l/min]	12		-	3555
	[kW]			-	31,4
	[l/min]	**12,5**		-	3550
	[kW]			-	31,7
Pot. Ass. a vuoto / *Off load power*		[kW]		7,5	6,7
Livello pressione acustica **(3) (6)** / *Sound pressure level* **(3) (6)**		[dB(A)]		68	
REFERENCE CONDITION / *CONDIZIONI DI RIFERIMENTO*					
Intake pressure / *Pressione d'aspirazione*		[bar(a)]		1	
Intake temperature / *Temperatura aspirazione*		[°C]		20	
Relative humidity / *Umidità relativa*		%		0	
Nominal motor speed / *Velocità nominale motore*		[g/1']		1500	
ELECTRICAL CHARACTERISTICS / *CARATTERISTICHE ELETTRICHE*					
Motor rated power / *Potenza nominale motore*		[kW]		30	
Voltage **(4)** - Frequency / *Tensione* **(4)** - *Frequenza*		[V/Hz]		400/50	
Enclosure-Insulation class / *Grado prot.-Classe isolamento*				IP55-F	
Electric starting / *Tipo avviamento*				Star delta / *stella triangolo*	
Fan rated power **(6)** / *Potenza assorbita vent.* **(6)**		[kW]		0,5	
Auxiliary circuit voltage / *Tensione circuito ausiliario*		[V]		110	
Supply min wire section / *Sez. min cavo alimentazione*		[mm2]		25 (x 10 m)	
TYPE OF REGULATION / *TIPO DI REGOLAZIONE*					
Modulation / *Modulazione*				intake proportional valve / *valvola aspirazione proporzionale*	
On load, off load and stop / *Marcia a carico, a vuoto e arresto*				pressureswitch / *controllo pressostatico*	
On load, off load / *Marcia a carico, a vuoto*				pressureswitch / *controllo pressostatico*	
DRYER / *ESSICCATORE* (Only Plus / *Solo Plus*)					
Absorbed power / *Potenza assorbita*		[kW]		1,05	
Gas				R 404 A	
Nominal dew point / *Punto di rugiada nominale*		[°C]		3	
OTHERS / *VARIE*					
Allowable ambient temperature / *Temp. Amb. min-max*		[°C]		+1 / +40	
Outlet air temperature **(5)** / *Temperatura uscita aria* **(5)**					
AC version / *Versione AC*	plus version / *Versione plus*	[°C]		≤ 30	20
min-max oil temperature / *Temperatura min e max olio*		[°C]		80÷110	
Cooling air flow rate **(6)** / *Portata aria di raffreddamento* **(6)**		[m3/h]		77	
Fan residual head **(6)** / *Prevalenza residua ventilatore* **(6)**		[Pa]		20	
Total recoverable heat / *Calore totale recuperabile*		%		~ 95	
Oil system capacity / *Capacità circuito olio*		[l]		10	
Oil carry over / *Residuo olio nell'aria compressa*		[ppm]		≤ 3	
Air outlet size / *Attacco uscita aria*				Rp 1"	
Condensate drain outlet size / *Attacco scarico di condensa*					
plus version / *versione plus*				Rp 1/4"	
with condensate sep. KIT **(7)** / *con KIT separ. condensa* **(7)**				ϕ 10	
Water inlet-outlet size / *Attacco ingresso-uscita acqua*					
With heat recovery kit **(7)** / *con KIT recupero calore* **(7)**				2 x Rp ½"	
LxWxH / LxLxA		[mm]		1510 x 800 x 1200	
Weight with oil / *Peso con olio* AC	AC *plus*	[kg]		500	540

(1)= According to ISO 1217 (annex "C") / *Secondo ISO 1217 (annesso "C")*
(2)= Whitout dryer power (only Plus version) / *Esclusa potenza essiccatore (versioni Plus)*
(3)= According to PN8NTC2.3 measured at 1m distance / *Secondo PN8NTC2.3 misurato alla distanza di 1m*
(4)= According to CEI 38 / *Secondo CEI 38*
(5)= According to reference conditions indicated / *Alle condizioni di riferimento indicate*
(6)= Frequency 50 Hz / *Frequenza 50 Hz*
(7)= Optional / *Opzionale*

R17

17 Series General Purpose Regulator
3/4", 1", 1-1/4", and 1-1/2" Port Sizes

- **Accurate and quick response to changes in flow demand and line pressure variations**
- **Balanced valve minimizes effect of changes in inlet pressure on outlet pressure**
- **Standard relieving models allow reduction of outlet pressure even when the system is dead-ended**
- **Full flow gauge ports**
- **Low torque, non-rising adjusting knob**
- **Integral locking device on knob adjustment**
- **Can be serviced without removal from the air line**

Ordering Information. Models listed are knob adjustment, relieving type with gauge, 5 to 125 psig (0.3 to 8.5 bar) outlet pressure adjustment range*, and PTF threads.

Port Size	Model Number	Flow† scfm (dm^3/s)	Weight lbs (kg)
3/4"	R17-600-RGLA	440 (208)	2.31 (1.05)
1"	R17-800-RGLA	480 (227)	2.02 (0.92
1-1/4"	R17-A00-RGLA	400 (189)	2.68 (1.22)
1-1/2"	R17-B00-RGLA	440 (208)	2.59 (1.18)

† Typical flow with 150 psig (10 bar) inlet pressure, 90 psig (6.3 bar) set pressure and a 15 psig (1 bar) droop from set.

Alternative Models

R 1 7 - ★ ★ ★ - ★ ★ ★ ★

Port Size	Substitute
3/4″	6
1″	8
1-1/4″	A
1-1/2″	B

Option	Substitute
Not applicable	0

Adjustment	Substitute
Knob	0
T-bar	1

Diaphragm	Substitute
Relieving	R
Non relieving	N

Threads	Substitute
PTF	A
ISO Rc taper	B
BSPP (1-1/2″ ported units only)	C
ISO G parallel (not available with1-1/2″ ported units)	G

Outlet Pressure Adjustment Ranges*	Substitute
5 to 50 psig (0.3 to 3.5 bar)	E
5 to 125 psig (0.3 to 8.5 bar)	L
10 to 250 psig (0.7 to 17 bar)	S

Gauge	Substitute
With	G
Without	N

* Outlet pressure can be adjusted to pressures in excess of, and less than, those specified. Do not use these units to control pressures outside of the specified ranges.

ISO Symbols

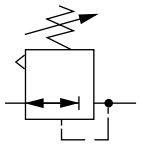

Relieving

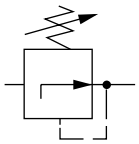

Non relieving

See Section ALE-24 for Accessories

Technical Data

Fluid: Compressed air
Maximum pressure: 300 psig (20 bar)
Operating temperature: -30° to 175°F (-34° to 80°C)*

* Air supply must be dry enough to avoid ice formation at temperatures 35°F (2°C).

Typical flow at 150 psig (10 bar) inlet pressure, 90 psig (6.3 bar) set pressure, and a droop of 15 psig (1 bar) from set: 480 scfm (227 dm^3/s)

Gauge ports:
- 1/4" PTF with PTF main ports
- R1/4 with ISO Rc, ISO G, and BSPP main ports

Materials
- Body: Aluminum
- Bonnet: Aluminum
- Bottom plug: Acetal
- Valve: Aluminum and nylon
- Elastomers: Nitrile

Typical Performance Characteristics

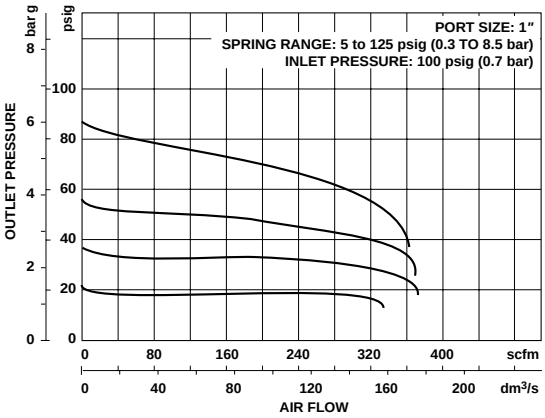

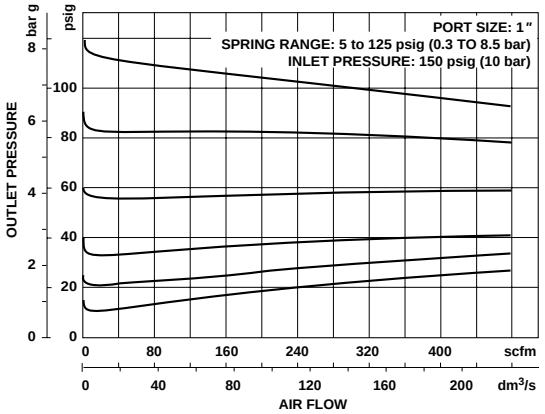

Service Kits

Item	Type	Part number
Service kit	Relieving	5578-02
	Non relieving	5578-01

Service kit contains, diaphragm, all o-rings, valve, and valve spring.

All Dimensions in Inches (mm)

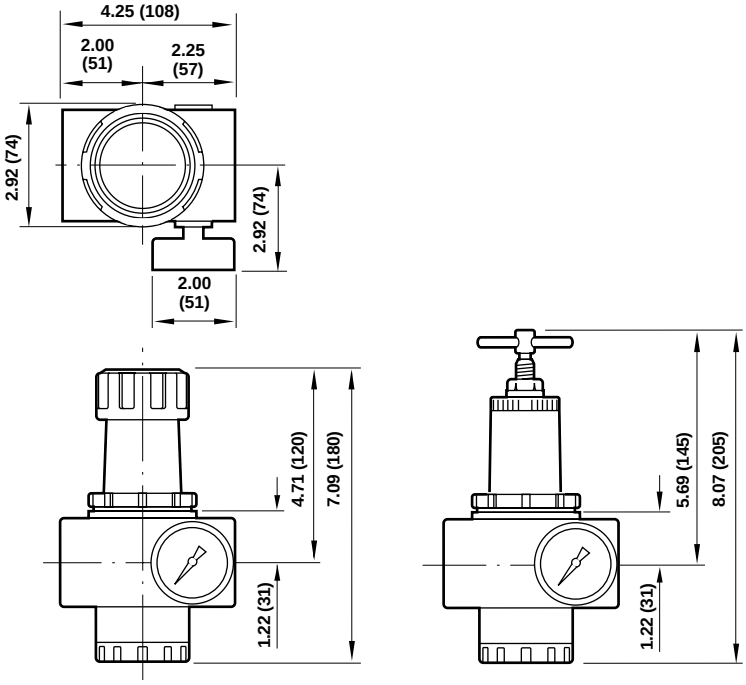

Panel mounting hole diameter: 2.28″ (58 mm)
Panel thickness: 0.06″ *to* 0.16″ (2 to 4 mm)

NORGREN

Pressure Regulator
R17 - ★★★ - ★★★★

R17
Installation & Maintenance Instructions

Port
6....3/4"
8....1"
A....1-1/4"
B....1-1/2"

Option
0....Not applicable

Adjustment Type
0....Knob
1....T-Handle

Relief Type
R....Relieving
N....Non relieving

Gauge
G....With
N....Without

Spring (Outlet Pressure Range) *
E....0,3 to 3,5 bar (5 to 50 psig)
L....0,3 to 8,5 bar (5 to 125 psig)
S....0,7 to 17 bar (10 to 250 psig)

Thread Form
A....PTF
B....ISO Rc taper
G....ISO G parallel

* Outlet pressure can be adjusted to pressures in excess of, and less than, those specified. Do not use these units to control pressures outside of the specified ranges.

TECHNICAL DATA
Fluid: Compressed air
Maximum pressure: 20 bar (300 psig)
Operating temperature: -34° to +80°C (-30° to +175°F)
* Air supply must be dry enough to avoid ice formation at temperatures +2°C (+35°F).
Typical flow at 10 bar (150 psig) inlet pressure, 6,3 bar (90 psig) set pressure, and a droop of 1 bar (15 psig) from set: 227 dm^3/s (480 scfm)
Gauge ports:
1/4" PTF with PTF main ports
Rc1/4 with ISO Rc and ISO G main ports
Materials:
Body: Aluminum
Bonnet: Aluminum
Bottom plug: Acetal
Valve: Aluminum and nylon
Elastomers: Nitrile

REPLACEMENT ITEMS
Service kit (includes items circled on exploded view)
Relieving.....5578-02
Non-relieving.....5578-01
Tamper resistant seal wire 2117-01

PANEL MOUNTING DIMENSIONS
Panel mounting hole diameter: 58 mm (2.28")
Panel thickness: 2 to 4 mm (0.06" to 0.16")

INSTALLATION
1. Shut off air pressure. Install regulator in air line -
   - with air flow in direction of arrow on body,
   - upstream of lubricators and cycling valves,
   - as close as possible to the device being serviced.
   - at any angle.
2. Connect piping to proper ports using pipe thread sealant on male threads only. Do not allow sealant to enter interior of regulator.
3. Install a pressure gauge or plug the gauge ports. Gauge ports can also be used as additional outlets for regulated air.
4. Install a Norgren general purpose filter upstream of the regulator.

ADJUSTMENT
1. Before applying inlet pressure to regulator, turn adjustment (1 or 3) counterclockwise to remove all force on regulating spring (7).
2. Apply inlet pressure, then turn adjustment (1 or 3) clockwise to increase and counterclockwise to decrease pressure setting.
3. Always approach the desired pressure from a lower pressure. When reducing from a higher to a lower setting, first reduce to some pressure less than that desired, then bring up to the desired pressure.

NOTE
With non-relieving regulators, make pressure reductions with some air flow in the system. If made under no flow (dead-end) conditions, the regulator will trap the over-pressure in the downstream line.

4. KNOB ADJUSTMENT. Push lockring on knob down to lock pressure setting. Pull lockring up to release. Install tamper resistant wire (see ***Replacement Items***) to make setting tamper resistant.
5. T-BAR ADJUSTMENT. Tighten lock nut (4) lock pressure setting.

DISASSEMBLY
1. Regulator can be disassembled without removal from air line.
2. Shut off inlet pressure. Reduce pressure in inlet and outlet lines to zero.
3. Turn adjustment (1 or 3) fully counterclockwise to remove all force on regulating spring (7).
4. Disassemble in general accordance with the item numbers on exploded view.

CLEANING
1. Clean parts with warm water and soap. Do not submerge knob type bonnets (1) in solution, as lubricant will be removed.
2. Rinse and dry parts. Blow out internal passages in body with clean, dry compressed air.
3. Inspect parts. Replace those found to be damaged.

ASSEMBLY
1. Lubricate o-rings, valve stem (15), valve bore in bottom plug (12), adjusting screw tip and adjusting screw threads inside bonnet (1, 6), threads on bonnets (1, 6) and bottom plug (12) with a light coat of good quality o-ring grease.
2. Assemble the unit as shown on the exploded view.
3. Torque Table

Item	Torque in Nm (Foot-Pounds)
1, 6 (Bonnets)	41 to 48 (30 to 35)
12 (Bottom plug)	Hand tight

WARNING
These products are intended for use in industrial compressed air systems only. Do not use these products where pressures and temperatures can exceed those listed under ***Technical Data***.

If outlet pressure in excess of the regulator pressure setting could cause downstream equipment to rupture or malfunction, install a pressure relief device downstream of the regulator. The relief pressure and flow capacity of the relief device must satisfy system requirements.

The accuracy of the indication of pressure gauges can change, both during shipment (despite care in packaging) and during the service life. If a pressure gauge is to be used with these products and if inaccurate indications may be hazardous to personnel or property, the gauge should be calibrated before initial installation and at regular intervals during use.

Before using these products with fluids other than air, for non industrial applications, or for life-support systems consult Norgren.

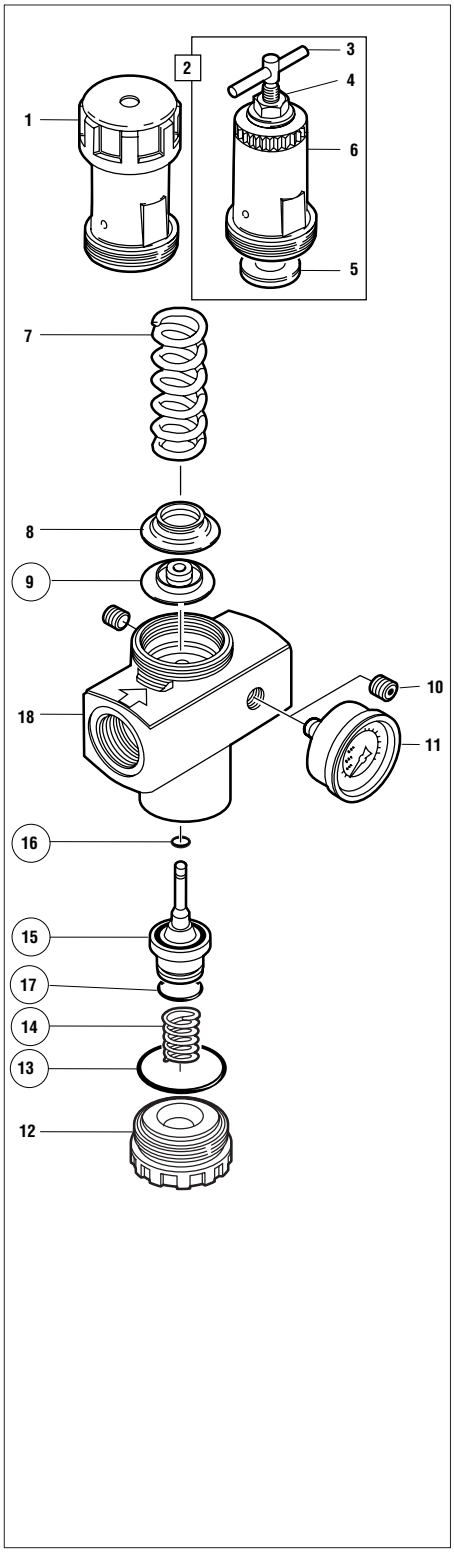

© Norgren 2001

F17

17 Series General Purpose Filter
3/4", 1", 1-1/4", 1-1/2" Port Sizes

- **Protects air operated devices by removing liquid and solid contaminants from compressed air**
- **Screw-on bowl reduces maintenance time**
- **Can be serviced without the use of tools or removal from the air line**
- **Optional visual service indicator turns from green to red when the filter element needs to be cleaned or replaced**
- **Optional electrical service indicator also available**

Ordering Information. Models listed include automatic drain, 40 µm element, metal bowl with sight glass, and PTF threads.

Port Size	Model Numbers	Flow scfm (dm^3/s)*	Weight lbs (kg)
3/4"	F17-600-A3DA	325 (153)	4.26 (1.93)
1"	F17-800-A3DA	425 (201)	4.15 (1.88)
1-1/4"	F17-A00-A3DA	425 (201)	4.39 (1.99)
1-1/2"	F17-B00-A3DA	425 (201)	4.30 (1.95)

* Typical flow with a 40 µm element at 90 psig (6.3 bar) inlet pressure and 5 psig (0.35 bar) pressure drop.

Alternative Models

F 1 7 - ★ ★ ★ - ★ ★ ★ ★

Port Size	Substitute
3/4″	6
1″	8
1-1/4″	A
1-1/2″	B

Option	Substitute
Not applicable	0

Service Indicator	Substitute
With (visual)	1
With (electrical)	4
Without	0

Threads	Substitute
PTF	A
ISO Rc taper	B
BSPP (1-1/2″ ported units only)	C
ISO G parallel (not available with 1-1/2″ ported units)	G

Bowl	Substitute
1 quart (1 liter) metal with sight glass	D
1 quart (1 liter) metal	M

Element	Substitute
5 µm	1
25 µm	2
40 µm	3
75 µm	4

Drain	Substitute
Automatic	A
Manual	M

ISO Symbols

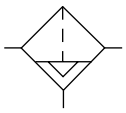

Auto Drain

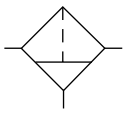

Manual Drain

See Section ALE-24 for Accessories

Technical Data

Fluid: Compressed air
Maximum pressure: 250 psig (17 bar)
Operating temperature:* -30° to 175°F (-34° to 80°C)
* Air supply must be dry enough to avoid ice formation at temperatures below 35°F (2°C)
Particle removal: 5 µm, 25 µm, 40 µm, or 75 µm filter element
Air quality: Within ISO 8573-1, Class 3 and Class 5 (particulates)
Typical flow with a 40 µm element at 90 psig (6.3 bar) inlet pressure and 5 psig (0.35 bar) pressure drop: 425 scfm (201 dm^3/s)
Nominal bowl size: 1 quart (1 liter)
Manual drain connection: Will fit 1/8-27 and 1/8-28 pipe thread.
Automatic drain connection: Will fit 1/8-27 and 1/8-28 pipe thread. - Flexible tube with 3/16" (5mm) minimum I.D. can be connected to the automatic drain. Drain may fail to operate if the tube I.D. is less than 3/16" (5mm). Avoid restrictions in the tube.
Automatic drain operating conditions (float operated):
Bowl pressure required to close drain: Greater than 5 psig (0.3 bar)
Bowl pressure required to open drain: Less than 3 psig (0.2 bar)
Minimum air flow required to close drain: 2 scfm (1 dm^3/s)
Manual operation: Depress pin inside drain outlet to drain bowl
Materials
Body: Aluminum
Bowl: Aluminum
Bowl sight glass: Pyrex
Elastomers: Neoprene and nitrile
Filter element
5 µm: Sintered bronze
25 µm: Sintered bronze
40 µm: Sintered bronze
75 µm: Stainless steel screen
An automatic drain is a two-way valve, which will close when the system is pressurized. The drain opens when the float rises due to accumulated liquid and on depressurization.

Typical Performance Characteristics

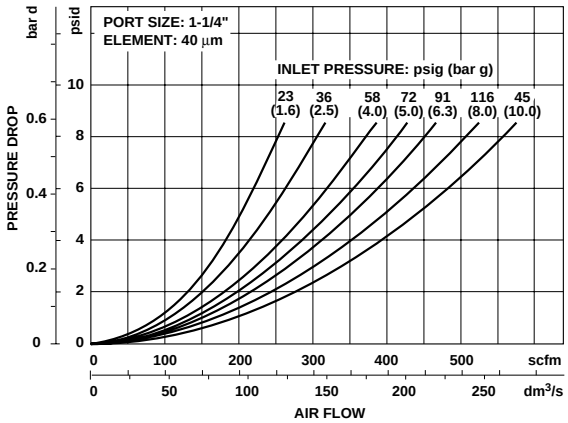

Service Kits

Item	Type	Part number
Service kits	All filters	5578-05
Replacement elements	5 µm	5311-01
	25 µm	5311-02
	40 µm	5311-03
	75 µm	5656-01
Replacement drain	Automatic	3000-10
	Manual (1/4 turn)	619-50

Service kit 5778-05 includes bowl o-ring, drain gasket, and element gasket.

All Dimensions in Inches (mm)

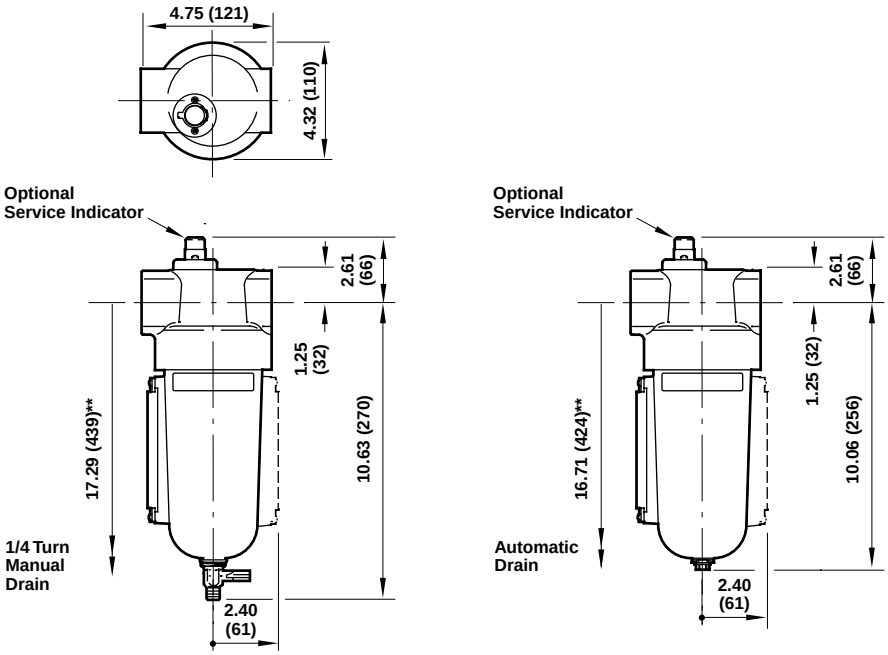

** Minimum clearance required to remove bowl

NORGREN

General Purpose Filter
F17 - ★★★ - ★★★★

F17
Installation & Maintenance Instructions

Port
6....3/4"
8....1"
A....1-1/4"
B....1-1/2"

Service Indicator
00..Without
01..With mechanical indicator
04..With electrical service indicator

Drain
A....Automatic
M...Manual, 1/4 turn

Element
1....5µm
2....25µm
3....40µm
4....75µm

Bowl
D...1 litre (1 quart U.S.) metal with sight glass
M..1 litre (1 quart U.S.) metal without sight glass

Thread Form
A....PTF
B....ISO Rc taper
G....ISO G parallel

* See Norgren publication IM-900.920 for specifications and electrical wire connections of the optional electric service indicator.

TECHNICAL DATA
Fluid: Compressed air
Maximum pressure: 17 bar (250 psig)
Operating temperature:* -34° to +80°C (-30° to +175°F)
* Air supply must be dry enough to avoid ice formation at temperatures below +2°C (+35°F)
Particle removal: 5 µm, 25 µm, 40 µm, or 75 µm filter element
Air quality: Within ISO 8573-1, Class 3 and Class 5 (particulates)
Typical flow with a 40 µm element at 6,3 bar (90 psig) inlet pressure and 0,5 bar (7 psid) pressure drop:
1" ports: 236 dm^3/s (500 scfm)
Nominal bowl size: 1 litre (1 quart US)
Drain connection: 1/8" pipe thread
Automatic drain operating conditions:
Minimum pressure: 0,7 bar (10 psig).
Drain opens when bowl pressure drops below 0,2 bar (3 psig).
Minimum air flow required to close drain: 1 dm^3/s (2 scfm)
Materials:
Body: Aluminum
Bowl: Aluminum
Bowl sight glass: Pyrex
Elastomers: Neoprene and nitrile
Filter element:
5 µm: Sintered bronze
25 µm: Sintered bronze
40 µm: Sintered bronze
75 µm: Stainless steel screen

REPLACEMENT ITEMS
Service kit (includes items circled on exploded view)...5778-05
Liquid level lens kit (20, 22 thru26).....2273-22
Filter element, 5µm (30) 5311-01
Filter element, 25µm (30) 5311-02
Filter element, 40µm (30) 5311-03
Filter element, screen, 75µm (30).....5656-01
Manual drain (14, 15, 16) 619-50
Automatic drain (17, 18, 19).....3000-10
Mechanical service Indicator (1).....5797-50
Electrical service Indicator (6) 4020-51R

INSTALLATION
1. Shut-off air pressure. Install filter in air line -
   - vertically (bowl down),
   - with air flow in direction of arrow on body,
   - upstream of regulators, lubricators, and cycling valves,
   - as close as possible to the air supply when used as a main line filter,
   - as close as possible to the device being serviced when used as a final filter.
2. Connect piping to proper ports using pipe thread sealant on male threads only. Do not allow sealant to enter interior of unit.
3. Turn bowl (27) into body until arrowhead on bowl is aligned with or to the right of the arrowhead on the body
4. Flexible tube with 3mm (0.125") minimum I.D. can be connected to the automatic drain. Avoid restrictions in the tube.

SERVICING
1. Open manual drain to expel accumulated liquids. Keep liquids below baffle (28).
2. Clean or replace filter element when dirty, when optional mechanical service indicator shows approximately all red, or when optional electrical service indicator provides an electrical output.

DISASSEMBLY
1. Filter can be disassembled without removal from air line.
2. Shut off inlet pressure. Reduce pressure in inlet and outlet lines to zero.
3. Disassemble in general accordance with the item numbers on exploded view.Do not remove the drains or the service indicators (1, 6) unless replacement is necessary. Remove and replace only if they malfunction.

CLEANING
1. Clean mechanical indicator lens (3) with warm water only. Clean electrical indicator (6) with dry, clean cloth. Clean other parts with warm water and soap.
2. Rinse and dry parts. Blow out internal passages in body (34) with clean, dry compressed air. Blow air through filter element (30) from inside to outside to remove surface contaminants.
3. Inspect parts. Replace those found to be damaged.

ASSEMBLY
1. Lubricate o-rings with o-ring grease.
2 If the 1/4 turn manual drain (14, 15, 16) was removed, lubricate the portion of the drain body (14) that contacts the bowl, and the hole in the manual drain body that accommodates the stem of drain valve (15) with o-ring grease. Press body (14,) thru hole from inside of bowl. Place retainer o-ring (16) over body (14) and position in groove. Press drain valve (15) thru hole in body (14).
3. Assemble the liquid indicator parts (20, 21, 22, 23, 24, 25) to bowl. Apply a 0,9 to 1,8 kg (2 to 4 pound) clamping force to upper and lower brackets (21) to pull brackets together. Tighten screws (20) to 0,9 to 1,1 N-m (8 to 10 inch-pounds).
4. Assemble filter as shown on the exploded view. Arrows on indicator (3, 8) and body (34) must point in same direction. Place o-ring (33) on louver (32), then press in place into body. Screw baffle (28) onto centerpost until contact is made with filter element (30).
5. Torque Table

	Torque in N-m (Inch-Pounds)
2, 7 (Screw)	2,8 to 3,9 (25 to 35)
18 (Nut), 28 (baffle)	2,3 to 2,8 (20 to 25)

6. Turn bowl (27) into body until arrowhead on bowl is aligned with or to the right of the arrowhead on the body.

CAUTION
Water vapor will pass through these units and could condense into liquid form downstream as air temperature drops. Install an air dryer if water condensation could have a detrimental effect on the application.

WARNING
These products are intended for use in industrial compressed air systems only. Do not use these products where pressures and temperatures can exceed those listed under ***Technical Data***.

Before using these products with fluids other than air, for nonindustrial applications, or for life-support systems consult Norgren.

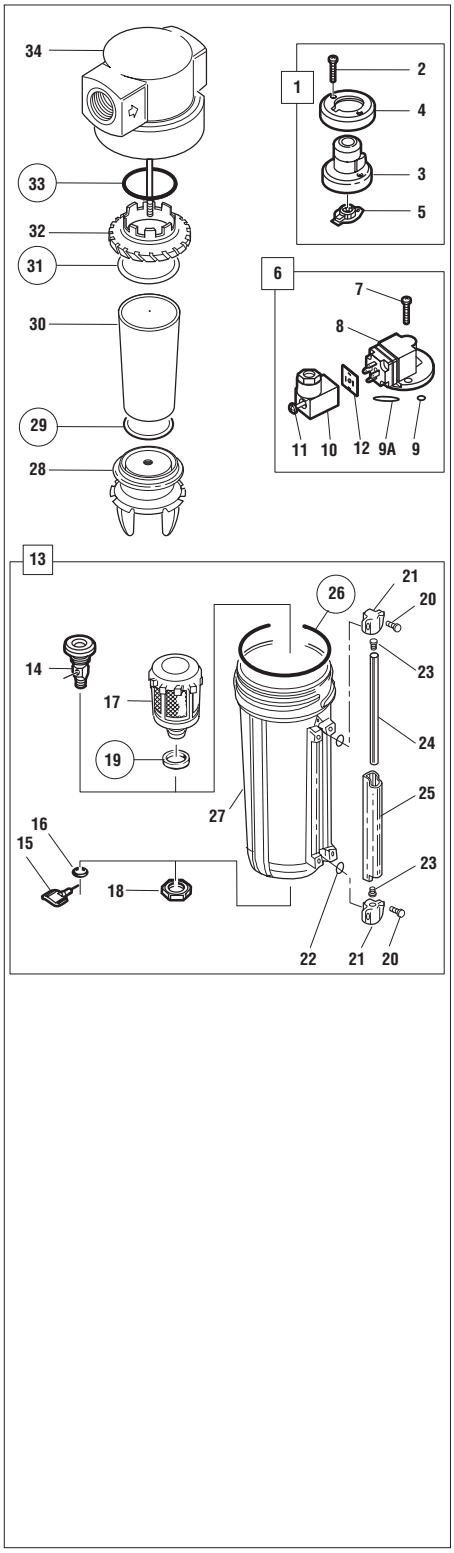

© Norgren 2001

F46 Oil Removal Filter

17 Series
Oil Removal (Coalescing) Filter
3/4″, 1″, 1 1/4″ Port Sizes

- **High efficiency oil and particle removal**
- **Screw-on bowl reduces maintenance time**
- **Can be disassembled without the use of tools or removal from the air line**
- **Standard service indicator turns from green to red when the filter element needs to be replaced**

Install an F17 filter with a 5 µm filter element upstream of the F46 filter for maximum service life.

Technical Data

Fluid: Compressed air
Maximum pressure: 17 bar (250 psig)
Operating temperature:* -20° to +65°C (0° to +150°F)
* Air supply must be dry enough to avoid ice formation at temperatures below +2°C (+35°F)
Particle removal: Down to 0,01 µm
Air quality: Within ISO 8573-1, Class 1 (particulates) and Class 2 (oil content)
Maximum remaining oil content in outlet air: 0,01ppm at +20°C (+70°F) with an inlet oil concentration of 17 ppm.
Maximum flow at 6,3 bar (90 psig) inlet pressure to maintain stated oil removal performance:
3/4″ ports: 42 dm^3/s (90 scfm)
1″ ports: 59 dm^3/s (125 scfm)
1 1/4″ ports: 59 dm^3/s (125 scfm)
Nominal bowl size: 1 litre (1 quart US)
Automatic drain connection: 1/8″
Automatic drain operating conditions:
Minimum pressure: 0,7 bar (10 psig).
Drain opens when bowl pressure drops below 0,2 bar (3 psig).
Minimum air flow: 1 dm^3/s (2 scfm) required to close drain.

Materials:
Body: Aluminum
Bowl: Aluminum
Bowl sight glass: Pyrex
Elastomers: Neoprene and nitrile
Filter element: Synthetic fiber and polyurethane foam

Ordering Information

See *Ordering Information* paragraphs on the following pages.

ISO Symbols

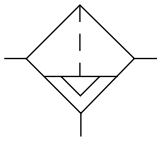

Automatic Drain

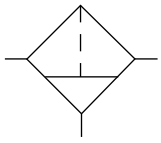

Manual Drain

Our policy is one of continuous research and development.
We reserve the right to amend, without notice, the specifications given in this document.

Typical Performance Characteristic

Inlet Pressure bar	(psig)	Maximum Flow† dm³/s	(scfm)
2,5	(36)	33,0	(70)
4	(58)	44,4	(94)
6,3	(90)	60,8	(129)
8	(116)	79,8	(169)
10	(150)	96,3	(204)

† Maximum flow to maintain stated oil removal performance.

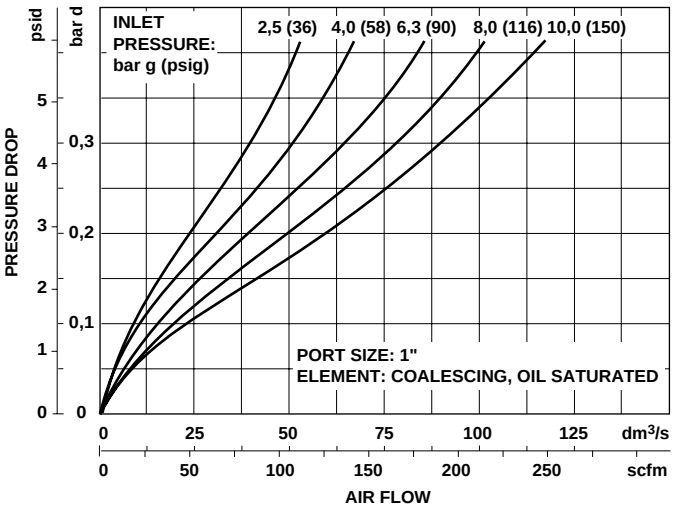

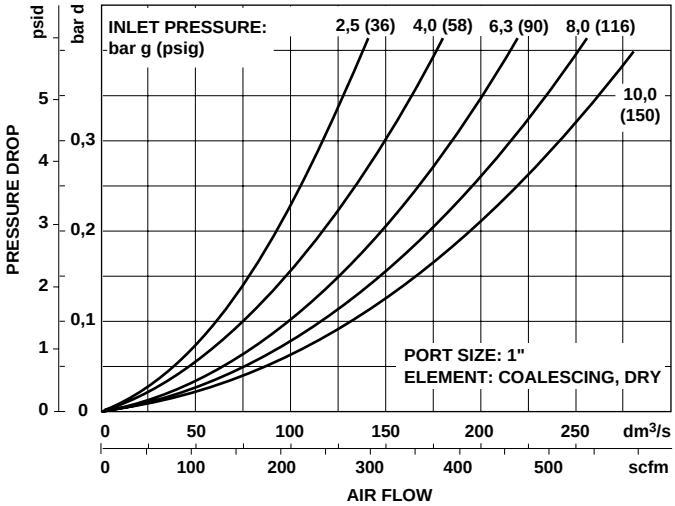

Ordering Information. Models listed include automatic drain, metal bowl with sight glass, and ISO G threads.

Port Size	Model Numbers	Maximum Flow* dm³/s (scfm)	Weight lbs (kg)
G3/4	F46-601-A0DG	42 (90)	1.86 (4.11)
G1	F46-801-A0DG	59 (125)	1.84 (4.05)
G1 1/4	F46-A01-A0DG	59 (125)	1.95 (4.29)

* Maximum flow for oil-saturated element at 6,3 bar (90 psig) inlet pressure to maintain stated oil removal performance.

Alternative Models

F 4 6 - ★ ★ ★ - ★ ★ ★ ★

Port Size	Substitute
3/4″	6
1″	8
1 1/4″	A

Option	Substitute
Not applicable	0

Service Life Indicator	Substitute
Without	0
With (visual)	1
With (electrical)	4

Threads	Substitute
PTF	A
ISO Rc taper	B
ISO G parallel	G

Bowl	Substitute
Metal with sight glass	D
Metal	M

Element	Substitute
Coalescing	0

Drain	Substitute
Automatic	A
Manual	M

Our policy is one of continuous research and development.
We reserve the right to amend, without notice, the specifications given in this document.

Accessories

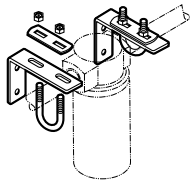 Wall Mounting Bracket	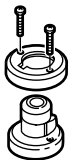 Service Life Indicator (visual)	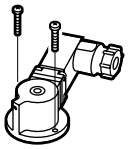 Service Life Indicator (electrical)
3/4", 1" ports: 6212-50	5797-50	4020-51
1 1/4", ports: 6212-51		

Dimensions – mm (Inches)

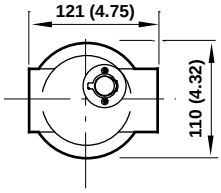

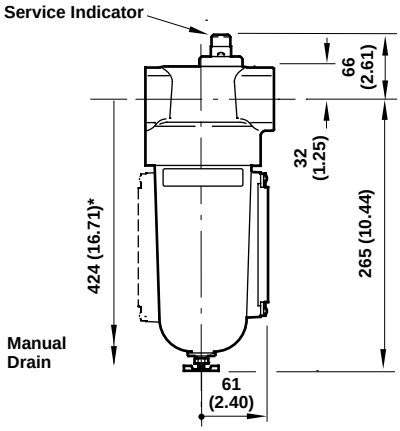

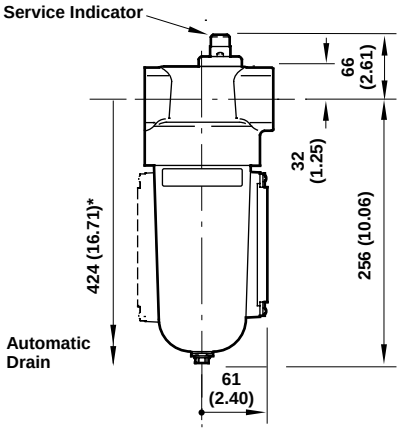

* Minimum clearance required to remove bowl.

Wall Bracket

Use 8 mm (5/16") screws to mount bracket to wall.

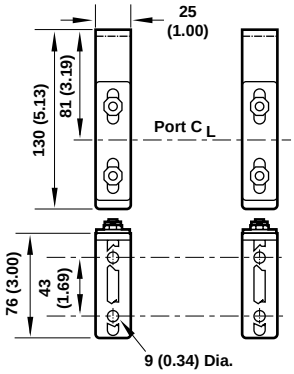

Wall Bracket Reference

Model	Part number
3/4", 1" ported units	6212-50
1 1/4", ported units	6212-51

Service Kits

Item	Type	Part number
Service kit	O-ring & gaskets	5351-04
Replacement drains	Automatic (1/8 NPT outlet)	3000-18
	Automatic (G1/8 outlet)	3000-97
	Petcock	684-01
Service life indicator	Visual	5797-50
	Electrical	4020-51

Service kit contains coalescing element, element o-ring, bowl o-ring, and drain gasket.

Our policy is one of continuous research and development.
We reserve the right to amend, without notice, the specifications given in this document.

NORGREN

Oil Removal Filter

F46 - ★★★ - ★★★★

F46

Installation & Maintenance Instructions

Port
6....3/4"
8....1"
A....1-1/4"

Service Indicator
00..Without
01..With mechanical indicator
04..With electrical service indicator

Drain
A....Automatic
M...Manual, 1/4 turn

Element
0....Coalescing

Bowl
D...1 litre (1 quart U.S.) metal with sight glass
M..1 litre (1 quart U.S.) metal without sight glass

Thread Form
A....PTF
B....ISO Rc taper
G....ISO G parallel

* See Norgren publication IM-900.920 for specifications and electrical wire connections of the optional electric service indicator.

TECHNICAL DATA

Fluid: Compressed air
Maximum pressure: 17 bar (250 psig)
Operating temperature:* -34° to +65°C (-30° to +150°F)
* Air supply must be dry enough to avoid ice formation at temperatures below +2°C (+35°F)
Particle removal: Down to 0.01 µm
Air quality: Within ISO 8573-1, Class 1 (particulates) and Class 2 (oil content)
Maximum remaining oil content in outlet air: 0,01ppm at +20°C (+70°F) with an inlet oil concentration of 17 ppm.
Maximum flow at 6,3 bar (90 psig) inlet pressure to maintain stated oil removal performance:
3/4″ ports: 42 dm^3/s (90 scfm)
1″ ports: 59 dm^3/s (125 scfm)
1 1/4″ ports: 59 dm^3/s (125 scfm)
Nominal bowl size: 1 litre (1 quart US)
Drain connection: 1/8" pipe thread
Automatic drain operating conditions:
Minimum pressure: 0,7 bar (10 psig).
Drain opens when bowl pressure drops below 0,2 bar (3 psig).
Minimum air flow required to close drain: 1 dm^3/s (2 scfm)
Materials:
Body: Aluminum
Bowl: Aluminum
Bowl sight glass: Pyrex
Elastomers: Neoprene and nitrile
Filter element: Synthetic fiber and polyurethane foam

REPLACEMENT ITEMS

Service kit (includes items circled on exploded view)...5351-04
Liquid level lens kit (20, 22 thru 26).....2273-22
Manual drain (14, 15, 16).....619-50
Automatic drain (17, 18, 19).....3000-18
Mechanical service Indicator (1).....5797-50
Electrical service Indicator (6).....4020-51R

INSTALLATION

1. Shut-off air pressure. Install filter in air line -
   - vertically (bowl down),
   - with air flow in direction of arrow on body,
   - upstream of regulators, lubricators, and cycling valves,
   - as close as possible to the air supply when used as a main line filter,
   - as close as possible to the device being serviced when used as a final filter.
2. Connect piping to proper ports using pipe thread sealant on male threads only. Do not allow sealant to enter interior of unit.
3. Turn bowl (27) into body until arrowhead on bowl is aligned with or to the right of the arrowhead on the body
4. Flexible tube with 3mm (0.125") minimum I.D. can be connected to the automatic drain. Avoid restrictions in the tube.
5. Install a Norgren general purpose filter with a 5 µm element upstream of the oil removal filter to obtain maximum element service life.

SERVICING

1. Open manual drain to expel accumulated liquids. Keep liquids below element (28).
2. Replace filter element when pressure drop across element exceeds 0,7 bar (10 psig). The mechanical service indicator shows approximately full red and the optional electrical service indicator provides an electrical output when pressure drop across element reaches 0,7 bar (10 psig).

DISASSEMBLY

1. Filter can be disassembled without removal from air line.
2. Shut off inlet pressure. Reduce pressure in inlet and outlet lines to zero.
3. Disassemble in general accordance with the item numbers on exploded view.Do not remove the drains or the service indicators (1, 6) unless replacement is necessary. Remove and replace only if they malfunction

CLEANING

1. Element (28) cannot be cleaned. Clean mechanical indicator lens (3) with warm water only. Clean electrical indicator (6) with dry, clean cloth. Clean other parts with warm water and soap.
2. Rinse and dry parts. Blow out internal passages in body (30) with clean, dry compressed air.
3. Inspect parts. Replace those found to be damaged.

ASSEMBLY

1. Lubricate o-rings with o-ring grease.
2 If the 1/4 turn manual drain (14, 15, 16) was removed, lubricate the portion of the drain body (14) that contacts the bowl, and the hole in the manual drain body that accommodates the stem of drain valve (15) with o-ring grease. Press body (14,) thru hole from inside of bowl. Place retainer o-ring (16) over body (14) and position in groove. Press drain valve (15) thru hole in body (14).
3. Assemble the liquid indicator parts (20, 21, 22, 23, 24, 25) to bowl. Apply a 0,9 to 1,8 kg (2 to 4 pound) clamping force to upper and lower brackets (21) to pull brackets together. Tighten screws (20) to 0,9 to 1,1 N-m (8 to 10 inch-pounds).
4. Assemble filter as shown on the exploded view. Arrows on indicator (3, 8) and body (30) must point in same direction.
5. Torque Table

	Torque in N-m (Inch-Pounds)
2, 7 (Screw)	2,8 to 3,9 (25 to 35)
18 (Nut)	2,3 to 2,8 (20 to 25)
28 (Element)	5 to 6 (45 to 55)

6. Turn bowl (27) into body until arrowhead on bowl is aligned with or to the right of the arrowhead on the body.

CAUTION

Water vapor will pass through these units and could condense into liquid form downstream as air temperature drops. Install an air dryer if water condensation could have a detrimental effect on the application.

WARNING

These products are intended for use in industrial compressed air systems only. Do not use these products where pressures and temperatures can exceed those listed under ***Technical Data***.

Before using these products with fluids other than air, for nonindustrial applications, or for life-support systems consult Norgren.

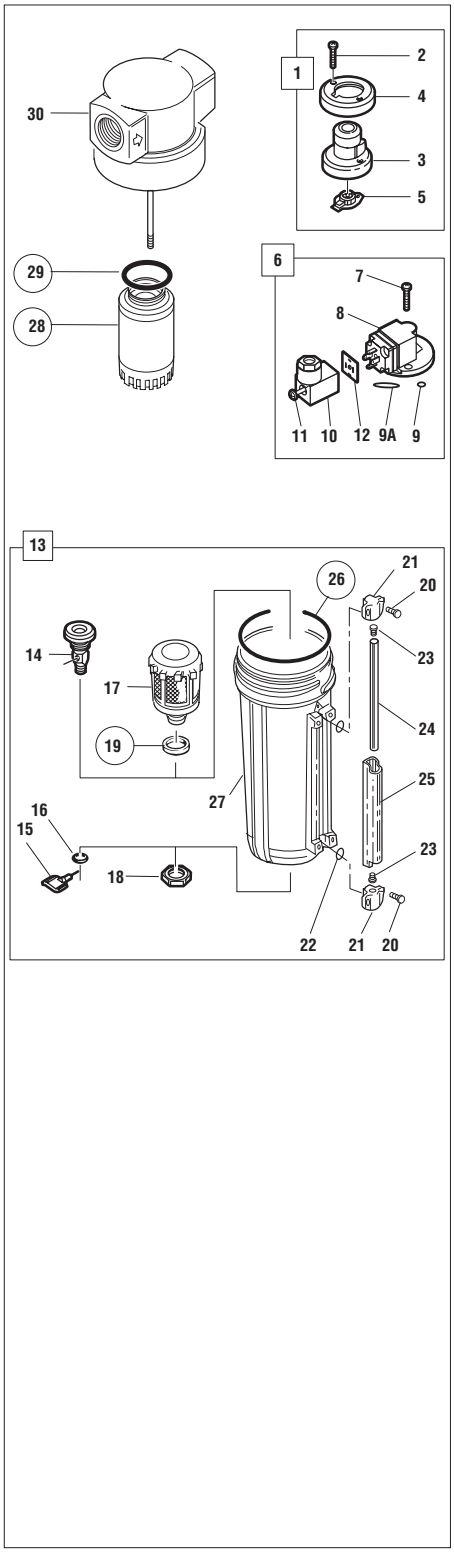

© Norgren 2001

Warning

These products are intended for use in industrial compressed air systems only. Do not use these products where *pressures* and *temperatures* can exceed those listed under **'Technical Data'**.

Before using these products with fluids other than those specified, for non-industrial applications, life-support systems, or other applications not within published specifications, consult Norgren.

Through misuse, age, or malfunction, components used in fluid power systems can fail in various modes. The system designer is warned to consider the failure modes of all component parts used in fluid power systems and to provide adequate safeguards to prevent personal injury or damage to equipment in the event of such failure.

System designers must provide a warning to end users in the system instructional manual if protection against a failure mode cannot be adequately provided.

System designers and end users are cautioned to review specific warnings found in instruction sheets packed and shipped with these products.

Water vapor will pass through these units and will condense into liquid if air temperature drops in the downstream system. Install an air dryer if water condensation could have a detrimental effect on the application.

Our policy is one of continuous research and development.
We reserve the right to amend, without notice, the specifications given in this document.

ACTIVATED CARBON VESSEL SYSTEM OPERATION & MAINTENANCE MANUAL

For

KIRTLAND AFB,NM

TIGG Corporation
1 Willow Ave
Oakdale, PA 15071
Ph: (724)703-3020
Fax: (724)703-3026
September 2015

TABLE OF CONTENTS

1.0 INTRODUCTION 1

2.0 EQUIPMENT SUMMARY 2
- 2.1 Design Basis 2
- 2.2 Carbon Vessel 3
- 2.3 Piping 3
- 2.4 Valves 3
- 2.5 Gaskets 3
- 2.6 Underdrains 3
- 2.7 Rupture Disk 3
- 2.8 Hose Adapters 3

3.0 PROCESS DESCRIPTION 4
- 3.1 Mode of Operation 4
- 3.2 Startup Procedures / Backwash Determination 4
- 3.2.1 Initial Carbon Fill 5
- 3.2.2 Backwashing to Segregate carbon 5
- 3.2.3 Deaerating/Prewetting 5
- 3.3 Initial Operation 6
- 3.4 Effluent Sampling/Change-out Determination 6
- 3.5 Suspended Solids Accumulation/Backwashing 7
- 3.6 Maintenance 7
- 3.7 Shutdown 7
- 3.8 Minimum Safety Precautions 8
- 3.9 Troubleshooting 8
- 3.9.1 General 8
- 3.9.2 Excessive Carbon Loses 9
- 3.9.3 High Pressure Drop in the Vessel 9
- 3.9.4 Poor Adsorption and Inefficient Carbon Usage 9
- 3.9.5 Carbon in the Effluent Line 10

4.0 System Pressure Drop 10

5.0 GAC Specificatiom 10

6.0 DETAILED CARBON CHANGE-OUT PROCEDURE 10
- 6.1 Removing Spent Carbon 10
- 6.1.1 Connections 10
- 6.1.2 Carbon Transfer 11

1.0 INTRODUCTION

The following sections discuss the design, process conditions and recommended operating procedures for a ***Liquid Phase Carbon Adsorption System***.

The system utilizes granular activated carbon for the adsorption of volatile and semi-volatile organic compounds for the treatment potable water following initial filtration for removal of suspended solids. The system is provided with two carbon adsorption vessels. It is intended that most of the time two vessels will treat the water in series operational mode. However, the vessels can also be operated in parallel mode if desired.

Scope of Supply

TIGG CORPORATION is supplying two, 10' diameter x 10' long straight side carbon adsorption vessels. These vessels are designed and constructed in accordance with ASME section VIII Division I with a pressure rating of 125 psi. See the Appendix for a drawing of the vessels.

Vessels are lined with Plasite 4110 as manufactured by Plasite Protective Coatings. Each vessel was tested for pinhole free lining by spark testing methods and then heat cured to meet NSF requirements.

The underdrain system consists of 8" stainless steel, schedule 10 headers with 1-1/2" stainless schedule 10, 0.01" slotted pipe for laterals on the bottom of the vessel. An 8" stainless steel, schedule 10 inlet distributor is provided at the top of the vessel.

A piping skid is supplied with the vessels with a total of four customer hookup points. These points are Inlet Water, Treated water, Inlet Backwash and Effluent backwash. The inlet and treated water lines are 8" Schedule 40 carbon steel with 8" butterfly valves. The 8" valves are manually gear operated hand wheels. The backwash inlet and effluent lines are 8" schedule 40 carbon steel pipe with 8" diameter butterfly valves. The 8" valves are operated manually by gear operated hand wheels.

It is the responsibility of the contractor to hook up the piping past the flanged pipe rack supplied. A total system assembly can be seen on the System General Arrangement drawing. Other than the process piping supplied on the referenced drawing, a stainless steel carbon fill line with a pressure relief rupture disk is supplied on each vessel and a 4" carbon discharge pipe is supplied for a carbon slurry discharge. Also, a 2" carbon steel vent line is provided for venting the vessel manually and an air relief valve with 3/4" vent line for continuous automatic venting.

A tie-in point for utility water connection (3/4") is provided via a fitting on the carbon fill pipe. The connection can be used for carbon slurry water supply. Also, a compressed air connection (3/4") for the purposes of aiding carbon transfers is provided on the same line. The compressed air connection has a ball valve and threaded fitting for attaching the customer's preferred hose coupling. See System General Arrangement drawing for the depiction of the assembly.

The pressure relief system on each vessel consists of a 2" graphite rupture disk designed for 125 psig working pressure. The discharge from the rupture disk terminates in a threaded fitting for attaching a hose connection. One spare rupture disk is provided with the system.

Each carbon vessel will contain 20,000 lbs of TIGG NSF 12 x 40 coconut carbon for the removal and treatment of organic compounds.

Installation Requirements

The installation contractor shall be responsible for off loading of the vessels, setting the vessels on a firm foundation appropriately compacted for the weight of the vessels, and setting the vessels in place.

When the fixed bed carbon system is delivered to the jobsite, it should be checked thoroughly to ensure that all required items have been received and the filter equipment is free of any shipping damage ***prior to signing the bill of lading***.

All equipment will arrive at the job site via flat bed trailer. The vessels will arrive on their sides. The pipe rack, peripheral piping sections and miscellaneous parts will be directly secured to the truck bed of the trailer.

The vessels should be rigged for lifting by qualified workers. The vessels should be removed from the truck in a horizontal position by a dual block crane. Lift a vessel from the truck by the lifting lugs on the top head ***and*** the tailing pick point located by strapping the vessel legs high and tight. Vessels should never be rigged and maneuvered into an upright position by the tilt up method, as severe damage to the vessel legs could result.

- Remove tanks from truck and set upright on legs in a stable location
- Place valve rack between the vessels.
- Install 8" pipe connections from the tank to the valve rack (note: install lower pipe first) Repeat for all connections.
- Install the carbon discharge pipe (SS pipe) on the outside of the tank.

In addition, the contractor shall supply and install the influent supply, effluent discharge, backwash supply, and backwash discharge piping to the vessels.

Utility piping to be provided includes, uncontaminated water @ 100 gpm and 30 psig for hydraulic carbon transfer; uncontaminated water @ up to 710 gpm and 30 psig for a period of 10-15 minutes for backwash.

The Treatment Plant shall have the capability of managing 7100- 10,650 gallons of backwash water per event and 8000 gallons of slurry transfer water generated during carbon transfer operations.

2.0 EQUIPMENT SUMMARY

2.1 Design Basis

The design basis for this operation is as follows:

Influent type	Pre-filtered raw water
Flow rate	750 gpm Series flow
	1500 gpm maximum, parallel flow
Temperature	75°F maximum
	33°F minimum
Pressure	125 psig
Carbon fill	20,000 lbs per vessel
Superficial contact time	10 *min @ 550 gpm*
Backwash rate	700- 710 gpm for solids removal
Contaminants	influent water: ppb organic constituents

2.2 Carbon Vessel

Vessel Nomenclature	GAC1, GAC2
Outer Diameter	120 in
Straight Side	120 in
Design Pressure	125 psig
Design Temperature	33-75° F
Material	SA 516-70 Carbon Steel
Lining	Plasite Protective Coatings 4110 Heat Cured
Exterior Paint	Sherwin Williams Kemkromik epoxy (or equal).
Approximate Weight	18,500 *lbs empty; 113,000 lbs full (carbon & water)*

2.3 Piping

Piping associated with the carbon vessels is constructed with Sch 40 carbon steel materials. TIGG System General Arrangement drawing (see Appendix) depicts the external pipe provided with the carbon vessels.

2.4 Valves - Process

Butterfly valves with manual gear operator (8”) are provided.

2.5 Gaskets

Flange gaskets are EPDM rubber 1/8”tk per ANSI bolt pattern.

2.6 Underdrains

An underdrain system consists of stainless steel sch 10 slotted pipe with 0.01 slot size.

2.7 Rupture Disk

Rupture disks on the carbon vessels are 2” graphite disks with a burst pressure rating of 125psi. They are referenced on the P&ID dwg. Rupture disks were placed on the 4” carbon fill line to relieve any excess pressure build-up on the adsorber. The rupture disks will rupture at 125 psig. At no time should the adsorbers be operated at pressure greater than 125 psig. If the pressure is excessive and causes rupture disk to burst, immediately stop flow to the adsorber and carefully release any residual pressure through the 2” vent line. Once the system pressure is reduced, the rupture disk will need to be replaced.

2.8 Hose Adapters

Hose adapters on the carbon discharge, and drain, carbon fill pipelines are PT Coupling Co. “Part A” Cam-Lok style adapters.

Spare parts that may be required include rupture discs, underdrain nozzles, pressure gages, and valves if required. These parts may be ordered through TIGG.

3.0 PROCESS DESCRIPTION AND OPERATING PROCEDURES

The carbon adsorption system provided by TIGG Corporation consists of two vessels (GAC 1 & 2) and a pipe rack shown on the drawing. This system is to be employed as a polishing treatment system following primary filtration where the flow would be 1500 GPM (maximum) parallel mode or 750 GPM series operating mode. When running maximum flow, the vessels must be run in parallel. Each vessel is rated for 750 gpm maximum flow.

In order to achieve good organic compound removal and more efficient use of the carbon bed, it is recommended that the system be used in series mode at a typical flow of 550 gpm. Series flow will achieve maximum utilization of the activated carbon, thereby reducing annual costs. With the two adsorbers in series, the lead adsorber is used to remove the majority of organic constituents. The second adsorber is used to assure that the system meets treatment objectives as the organic mass transfer zone is maintained with the lead adsorber. The carbon in the lead adsorber will be eventually become saturated with organics. At his time, the lead adsorber must be taken out of service to allow the carbon bed to be exchanged with fresh carbon. The lag vessel is then put into service as the lead vessel.

By sampling and analyzing the residual organic constituents in the outlet of the adsorbers, the laboratory results can be plotted over time to develop a breakthrough curve for the organic constituents. This information is employed to assist the operating personnel in achieving maximum utilization of the activated carbon. In addition, three, ¼" sample ports are provided on the vertical side of each vessel so that the presence of organic constituents can be observed migrating down through the carbon bed.

Parallel flow can be employed by opening the specific inlet and outlet valves on the adsorbers as detailed in Table 2 of the Appendix. Parallel flow through the adsorbers is advantageous when the organic constituents present are readily adsorbable or a larger flow rate is desired. However, the maximum utilization of the carbon is reduced by operating the adsorbers in parallel. Also, the piping system is designed to allow the operation of each adsorber individually. This will enable one adsorber to be taken off-line for service while the other adsorber remains in operation.

The mode and valve operation on this versatile pipe system can be seen on the valve sequencing Tables in the Appendix.

3.1 Mode of Operation

Please refer to the Tables in the Appendix for the various modes of operation. The vessels can be operated in the following manner:

- Series GAC 1 to GAC 2, or GAC 2 to GAC 1
- Parallel, GAC 1 & GAC 2 on line
- GAC 1 on line with GAC 2 in either idle, backwash, spent carbon unloading, or fresh carbon loading mode
- GAC 2 on line with GAC 1 in either idle, backwash, spent carbon unloading, or fresh carbon loading mode

3.2 STARTUP PROCEDURES

The following steps outline the procedures to follow prior to placing the vessels in service. Tables in the Appendix identify the valve number and function description for the valves associated with each GAC vessel.

3.2.1 Initial Carbon Fill

Initially, carbon must be loaded into the vessels at the site. Fresh carbon will arrive in bulk containers (i.e., sacks). In order to protect the liquid collector (under drain) system, ***uncontaminated water must be added to the vessel prior to adding the carbon***. A sufficient amount of water should be added

such that the water level is at least 2 feet above the collector, or approximately 2200 gallons. Water can be added through the top manway. When adding clean uncontaminated water, all valves shall remain closed except for the vent valve.

After water has been added to the vessel, the adsorber is now ready to be filled with carbon. Proceed with the carbon filling as outlined below:

- Position the bulk carbon container near the adsorber to be filled. The fork lift or crane operator should elevate the sack over the manway on top of the vessel.
- Once this is done, the operator can slightly open the drawstring on the bulk bag and slowly start the transfer of carbon into the vessel. It should take about 18 sacks to fill the vessel.
- After the transfer of carbon is complete, the manway on the adsorber can be replaced and bolted in place.

Subsequent carbon exchanges following the initial fill will be done in the following manner: carbon will be loaded into the vessels via slurry method by TIGG's subcontractor. The carbon will arrive in bulk trailers.

In order to protect the liquid collector (under drain) system, ***uncontaminated water must be added to the vessel prior to adding the carbon***. A sufficient amount of water should be added such that the water level is at least 2 feet above the collector, or approximately 3,000 gallons. Water can be added through the 4" carbon fill line via the 3/4" connection on side of the carbon adsorber or by opening the manway on top of the vessel and letting a hose drape over for filling. When adding city or clean uncontaminated water, all valves shall remain closed except for the vent valve and the fresh water supply valve (3/4").

After the above procedure has been completed, the adsorber is now ready to be filled with carbon. The necessary valve sequences for filling the respective carbon vessel are provided in Tables in the Appendix. Proceed with the carbon filling as outlined below:

- The subcontractor should position the bulk trailer near the adsorber to be filled. The driver will connect all necessary hoses and will operate all the valves on the bulk trailer.
- Fill the trailer with approximately 5000 gallons of treated water.
- Connect a flexible hose with quick connect coupling between the bulk trailer and the adsorbers fill line 4" Cam-Lok fitting.
- Connect a temporary compressed air line to the bulk trailer and regulate the compressed air at 150scfm and 18 psig. Once this is done, the driver will open the bulk trailer starting the transfer of carbon.
- If the transfer of the carbon slurry is proceeding too slowly, there may be an issue with displacement of air in the vessel. In that case, it may be advantageous to displace the air through the backwash effluent line by opening valve 9 (Adsorber #2) or 10 (Adsorber #1) to vent the tank.
- Once the air flow is evidenced through the transfer hose, all of the replacement carbon should have been transferred from the bulk trailer into the adsorber. After the transfer is complete, disconnect the temporary compressed air and carbon transfer hoses. The 2" drain on the adsorber or by draining through the backwash effluent line can be used to displace the transfer water if the volume of water exceeds the capacity of the adsorber.

The adsorber is not ready to be placed on line. It is essential that two actions be taken prior to placing an adsorber in service. They are:

1) The carbon particles have been classified/segregated (Section 3.2.2); and,

2) All of the air has been removed from the carbon pores (Section 3.2.3).

If these steps are not completed, premature breakthrough of the organics can occur and thus there may be poor utilization of the carbon.

3.2.2 Backwashing to Segregate the Carbon

It is recommended that the carbon should be segregated in each bed prior to the adsorbers being placed on-line. This is important so that the carbon particles will always return to their same relative position in the bed after each backwashing operation. If the bed is not segregated, the carbon particles could change position and the adsorption zone (where adsorption is occurring) may be disturbed. This may result in poor utilization of the carbon and early breakthrough of organics. If backwashing of the beds is not feasible during initial operations, then proceed to section 3.2.3 below, prewetting the carbon.

Initial backwashing should be performed at a rate of 6 to 8 gpm/ft^2 or 480-630 gpm for 10 to 15 minutes until the backwash is clear of carbon fines. ***Uncontaminated*** water is preferred for this and all subsequent backwashing operations.

Backwashing of each vessel is accomplished by isolating the vessel to be backwashed. To isolate the vessel, close the treated water effluent valves and the influent valves. Once the vessel has been isolated the vessel can be backwashed. To initiate backwash, open the backwash discharge valve for the adsorber to be backwashed, (see Tables 3 & 5). Start the back wash pump and open the backwash supply valve slowly for the adsorber to be backwashed to prevent shocking the carbon bed and losing carbon. If possible, observe the backwash effluent stream to confirm that carbon is not being washed out of the vessel. If carbon, other than fines, is being washed out of the bed, close the supply valve slightly to reduce the flow to the vessel.

After backwashing is complete, close the backwash supply valve, shut down the pump and close the backwash discharge valve.

Subsequent to backwashing, the system is ready to be deaerated/prewetted as described in the following section.

3.2.3 Deaerating / Prewetting

As discussed previously, it is necessary to ensure that the carbon bed is properly deaerated prior to placing the unit in service. This is required to ensure proper flow though the bed to eliminate channeling, reduce pressure drop, and prevent premature breakthrough.

A bed of carbon consists of the following:

Void volume	-	40%
Pore volume	-	40%
Carbon skeleton	-	20%

A relatively long time is required for water to enter the pores and displace the air since the pores in dry carbon are filled with air and some adsorbed oxygen. Approximately 90% of the pores may be filled with water after 24 hours at ambient temperature (70° F).

In order to have the carbon pre-wetted, the adsorber should remain filled with water for at least 24-48 hours with the 3/4” vent line valve open on the carbon fill line. Having this valve open will permit trapped air to escape. After the carbon is pre-wetted, the bed should be backwashed for 10 to 15 minutes, prior to being placed on-line. It may be beneficial to repeat the backwash cycle after 2 or 3 days operation in order to remove any remaining air which collects in the bed.

3.3 Initial Operation

Assuming the vessels have been filled with carbon, properly pre-wetted and segregated as described in the preceding sections, the system is ready to be placed on-line for treating the contaminated water. The vessels should now be topped off with water and readied for operation by closing vent valves and opening the process inlet and outlet valves to the adsorbers required for treatment. (see Table 1).

Prior to introducing water into the adsorbers, ensure that the adsorber's influent valves are open on the vessels. Pressurize the influent line with the supply pumps and then slowly open the discharge valves to process water. **CAUTION - Sudden opening and closing of the valves could cause pre-mature failure of the rupture disks. Again please refer to the Appendix to identify the mode of operation and the associated valve positioning.**
Note: Before any water is processed, it is recommended practice that all the pipes on the pipe rack are filled with fresh water and high point vents be used to remove air from the piping. If air is allowed to stay in the piping, pressure drop through the piping system may increase.

3.4 Effluent Sampling / Change-out Determination

During operation, water samples should be taken on a regular basis from the discharge water and sample ports to monitor the mass transfer zone (MTZ) in each adsorber. After several cycles, it should be possible to determine how the MTZ moves and to predict when carbon exchange is required. If the MTZ is short, the concentration of the contaminants at the sample port will eventually equal the concentration in the influent.

The long term frequency for sampling the effluent of each vessel can be determined after the carbon in the adsorber has been changed two or three times. The effluent concentration of the contaminants should be plotted as a function of gallons treated. Assuming the influent concentration is essentially constant, it will be possible to determine when sampling should begin prior to the expected time to remove the spent carbon.

Once it has been determined that the carbon in the vessel is saturated with contaminants, then the lag vessel should be placed into lead service. Make sure the effluent valve on the standby adsorber is open, and then slowly open the inlet valve on the vessel to allow the process flow to enter the vessel. Once the lag vessel is on-line as the lead, the spent vessel can be taken out of service. The spent vessel is then isolated and the procedures should be followed for carbon change-out (section 7).

3.5 Suspended Solids / Backwashing

If there are suspended solids in the influent these may be filtered by the carbon bed. If this occurs they will collect on top of the bed and the pressure drop across the bed will increase. When the differential pressure drop across the system is roughly 10 psi above the initial clean bed pressure drop, the vessels should be backwashed. This operation should remove the solids and the differential pressure drop should return to normal. If it is necessary to backwash a vessel, the valve positions should be adjusted to block the vessel out of the process stream and open the valves to the backwash feed and return lines. The backwash flow rate should be approximately 710 gpm but should be adjusted such that the carbon bed is expanded but no carbon exits the bed. For each vessel, with 20,000 pounds of carbon, there is sufficient space above the carbon bed for 10 – 20% percent expansion. Experience will determine the required backwash period. When backwashing is completed, the pump must be shut off and

the vessel with fresh carbon can be placed on-line.

3.6 MAINTENANCE

The fixed bed carbon system is designed to require minimal maintenance. The following items should be inspected with regard to the carbon vessels, ancillary piping, valves and gages.

1) Internal inspection of a vessel should be performed each time carbon is removed.
2) Inspect the lining to verify it has not been damaged. If damage has occurred or been compromised in any way, it must be repaired prior to putting the vessel back in service.
3) Inspect the underdrain nozzles in the collector to insure they are intact and not plugged.
4) Pressure gages should be checked periodically to insure proper operation.
5) Piping and valves should be periodically inspected for signs of wear and/or leakage.

3.7 SHUTDOWN

The adsorption system is designed to operate continuously, 24 hours per day, 365 days per year. A short-term shutdown, as discussed below, is defined as a shutdown period that is expected to last less than 48 to 72 hours.

3.7.1 Short-Term Shutdown

A short-term shutdown is most likely to occur during weekend shutdown or routine maintenance of the system. During a short-term shutdown, the adsorbers may remain filled with water unless work is being performed on the adsorbers themselves. It may be necessary to close the inlet/outlet valves to prevent any siphoning or drainage from the vessels.

3.7.2 Long-Term Shutdown

A long-term shutdown is most likely to occur during spent carbon change-out, changes in the system configuration, major maintenance, etc. During a long-term shutdown the adsorbers should be completely drained to minimize potential for biological growth and bed septic condition.

The adsorbers are drained of excess water draining the vessels through the effluent water pipe until no water continues to run. After that water is allowed to drain, open the bottom 1” brass ball valve to drain the remaining water from the vessel. This drain should remain open for some time to allow water draining from the carbon to exit. **Do not open** the bottom 3” stainless steel ball valve at this time as carbon will be removed by doing so.

3.8 MINIMUM SAFETY PRECAUTIONS

All electrical, mechanical and rotating machinery constitute a potential hazard, particularly for those not familiar with the design, construction and operation. Accordingly, adequate safeguards (including use of protective equipment when necessary) should be taken with this equipment to safeguard the public (including minors) from injury and to prevent damage to the equipment, its’ associated system and the premises. Refer to the site specific health and safety plan (prepared by others) for site specific health risks and safety precautions to be undertaken when operating and maintaining this equipment.

The operation, maintenance and repair of this equipment should be undertaken only by personnel qualified to do so. All such personnel should be thoroughly familiar with the

equipment, the associated system and controls, and the procedures set forth in this manual. Proper care, procedures and tools must be used in handling, lifting, installing, operating, maintaining and repairing this equipment to prevent personal injury and/or property damage.

WET ACTIVATED CARBON CAN REDUCE OXYGEN LEVELS IN CONFINED SPACES. USE AND COMPLY WITH ALL APPLICABLE CONFINED SPACE ENTRY PROCEDURES WHEN ENTERING ADSORBER VESSELS CONTAINING WET CARBON, OR FROM WHICH CARBON HAS BEEN REMOVED.

Contaminated water may contain chemicals or biological contaminants which could be harmful if exposed to the skin, inhaled or ingested. Accordingly, personnel who may be exposed directly to the mists produced by water jets or compressed air should wear appropriate OSHA protective equipment.

3.9 TROUBLESHOOTING

This section is intended to identify a portion of the more common problems which may be encountered during the operation of a granular activated carbon system. The following “cause and effect” discussion is not intended to be all inclusive since situations and circumstances will vary with each individual system by virtue of design, operating philosophy, etc. Therefore, this section should only be considered as a guideline for troubleshooting.

3.9.1 General

The problems which arise generally fall under the following categories:

- Excessive carbon losses
- High pressure drop
- Poor adsorption and inefficient carbon usage

3.9.2 Excessive Carbon Losses

Generally, it is reasonable to expect 3% to 5% carbon loss for the following reason:

1) The fines in fresh carbon (up to 5%) may be washed out during the backwashing operation.

2) Backwashing causes the carbon particles to become rounded over time. Experience shows that the mean particle diameter can decrease 5 to 10 percent due to abrasion. This results in a reduction in the volume of carbon in the system because smaller, more rounded granules tend to pack more efficiently.

3.9.3 High Pressure Drop in the Adsorber

High pressure drop in the adsorber can be caused by:

1) Air in the carbon bed,

2) Suspended solids in the influent,

3) Plugging of the collector (under drain), and/or

4) Excessive carbon fines.

3.9.3.1 Air in the Carbon Bed

As discussed in Section 6.3, air in the carbon bed is generally caused by inadequate wetting of the carbon granules. Adherence to the startup procedures should eliminate this as a potential problem.

3.9.3.2 Suspended Solids in the Influent

If suspended solids are present in the influent water they will generally be filtered on top of the carbon bed. If this becomes a serious problem, causing excess pressure buildup and relatively frequent backwash cycles, pretreatment of the influent stream may be required.

3.9.3.3 Plugging of the Collector (Under drain)

Openings in the underdrain nozzles are designed such that small carbon particles may pass through without plugging. In some cases the characteristics of the water are such that oils, bacterial growth, etc. may migrate through the carbon and plug the underdrain nozzles. Usually a vigorous backwash will alleviate the problem.

3.9.4 Poor Adsorption and Inefficient Carbon Usage

Poor adsorption and inefficient carbon usage may be caused by the following:

1) Channeling caused by air and /or suspended solids in the carbon bed - Refer to Sections 4.2.1 and 4.2.2
2) Carbon saturation from organics - Change the carbon.
3) Increase in influent concentration of organics - Compare influent analyses.
4) Change in types of organics in the influent - Compare influent analyses.
5) Presence of non-adsorbable organics - Compare influent analyses.
6) Change of pH of influent water - Compare influent analyses.
7) Backwashing without segregating the carbon prior to startup - Refer to Section 4.2.

3.9.5 Carbon in the Effluent Line

Carbon may pass into the effluent line if the slotted pipe laterals fail(s). If carbon is detected, the particle size should be determined. If the particle size is greater than 0.012 inch, it is probable that a lateral pipe has been damaged or loosened from the header pipe.

4.0 SYSTEM PRESSURE DROP

Pressure drop when running 500 gpm through each vessel will be approximately 5 psi. Total pressure drop across the system operating in series can be approximately 15 psig total. The system should be backwashed if the total system pressure drop reaches 25 psig.

5.0 GAC SPECIFICATION – See Appendix, for carbon specs

6.0 DETAILED CARBON CHANGE-OUT PROCEDURE

When contaminant saturation has been identified in a vessel, the vessel will be taken off-line and isolated from the process stream as identified in Section 4.4. The carbon in the vessel must then be removed and replaced with fresh carbon. When it is determined that carbon should be removed from a vessel, the procedure discussed in the following sections should be followed.

6.1 Removing Spent Carbon in a Slurry Form

There are two options to remove the carbon as slurry. One option is to use air as the motive force. The other is to use water as the motive force.

6.1.1 Connections

The carbon slurry outlet line located on the bottom center of each vessel should be connected with a hose to a receiving container prior to carbon removal. For this size adsorber the container is usually a bulk trailer. The container should have a drain for removing the excess water from the carbon (prior to transportation).

A 3/4" water connection is provided for fresh water supply to aid in the slurry process. This is normally the fill line when the vessel is being filled but can serve to introduce carbon flush water also.

6.1.2 Carbon Transfer

To ensure a proper transfer of carbon from the adsorber, it is necessary to isolate the vessel from the process stream and to close any vent valves. This is required for pressurization of the adsorber vessel.

6.1.2.1 Carbon Transfer from Adsorber – using compressed air or pressure blower

To initiate the carbon transfer process for an Adsorber follow the steps detailed below:

1) Prepare for carbon removal by closing all valves and any other sample or flush valves that maybe open at that time.

2) With the vessel full of water, add pressurized air to the top head by connecting an air hose to the 3/4" ball valve on the carbon fill line. When the top of the vessel reaches 10-15 psi, open the carbon discharge valve (4" full port carbon discharge ball valve) and carbon should begin to flow through the transfer line.

3) There should be sufficient water in the vessel to remove the majority of the spent carbon. However, some carbon may remain in the adsorber due to the angle of repose of the carbon, which is 25 to 30 degrees. This remaining carbon is called the carbon heel. This amount may be as much as 2,000 to 3,000 pounds. The remaining carbon can be removed by either introducing water into the vessel through the underdrain via the backwash lines (carbon effluent) or by flushing it out with a hose by accessing the vessel through one of the manways.

4) Close the 3/4" ball valve in the fill line and open the 2" vent valve as soon as air exits the discharge line.

5) When pressure in the vessel is essentially atmospheric, prepare to add water for a period of

5 to 10 minutes. This should cause the carbon bed heal to slump.

6) Close the carbon discharge valve and open the backwash valve to introduce water to the vessel.

7) After 5 minutes, close the backwash valve to isolate the adsorber

8) Close vent valve.

9) Open the air supply valve to pressurize the vessel as in step 2. Open the carbon discharge valve and transfer the balance of the carbon to the trailer.

10) When the carbon removal process is completed, close the carbon discharge valve and prepare to add fresh carbon as described in Section 3.2.1.

<u>Note</u>: *After completing steps 1 through 10, there is still the possibility of a portion of spent carbon remaining in the bottom head. Therefore, open the manway to inspect the vessel. Depending on the quantity and location of the carbon, it may be necessary to use a hose to wash it into the bottom of the head and/or repeat the above backwashing/air pressure steps after closing the manway.*

6.1.2.2 Carbon Transfer from Adsorber – using total water slurry

To initiate the carbon transfer process for an Adsorber follow the steps detailed below:

1) Prepare for carbon removal by closing all valves and any other sample or flush valves.

2) Complete a backwash of the vessels as described in Section 4.2.2

3) Insure the vessel is full of water. Open the 8" influent valve and push approximately 100 gpm of clean or treated water through the vessel. A pressure of 10 – 20 psi at this flow rate should transfer the carbon to the bulk trailer. The carbon discharge valve will need to be opened after the pressure on the tank has been allowed to build to this level or slightly higher. Carbon will usually be pushed out at a rate of 1-3 lbs carbon/gal of water. However, there must be continuous flow. Once all the carbon is out of the vessel, an inspection through the manway may result in a wash down of any hanging carbon and a repeat of this step to push the remaining carbon back to the bulk trailer.

Also, during this process, the bulk trailer will need to be drained at a rate similar to the fill of 100 gpm. Usually the draining will require frequent stopping and starting of the feed to the 4" discharge line. This stopping and starting can be accomplished by closing the carbon discharge valve. When this occurs, the pressure on the pump must be either maintained so as not to rupture the pressure disk or it must be shut down to avoid over pressurization.

4) When the carbon removal process is completed, close the carbon discharge valve and all the process valves and prepare to add fresh carbon as described in Section 3.2.1.

<u>Note</u>: *After completing steps 1 through 3 there is still the possibility of a portion of spent carbon remaining in the bottom head. Therefore, open the manway to inspect the vessel. Depending on the quantity and location of the carbon, it may be necessary to use a hose to wash it into the bottom of the head and/or repeat the above backwashing/air pressure steps after closing the manway.*

APPENDIX

P&ID DRAWING

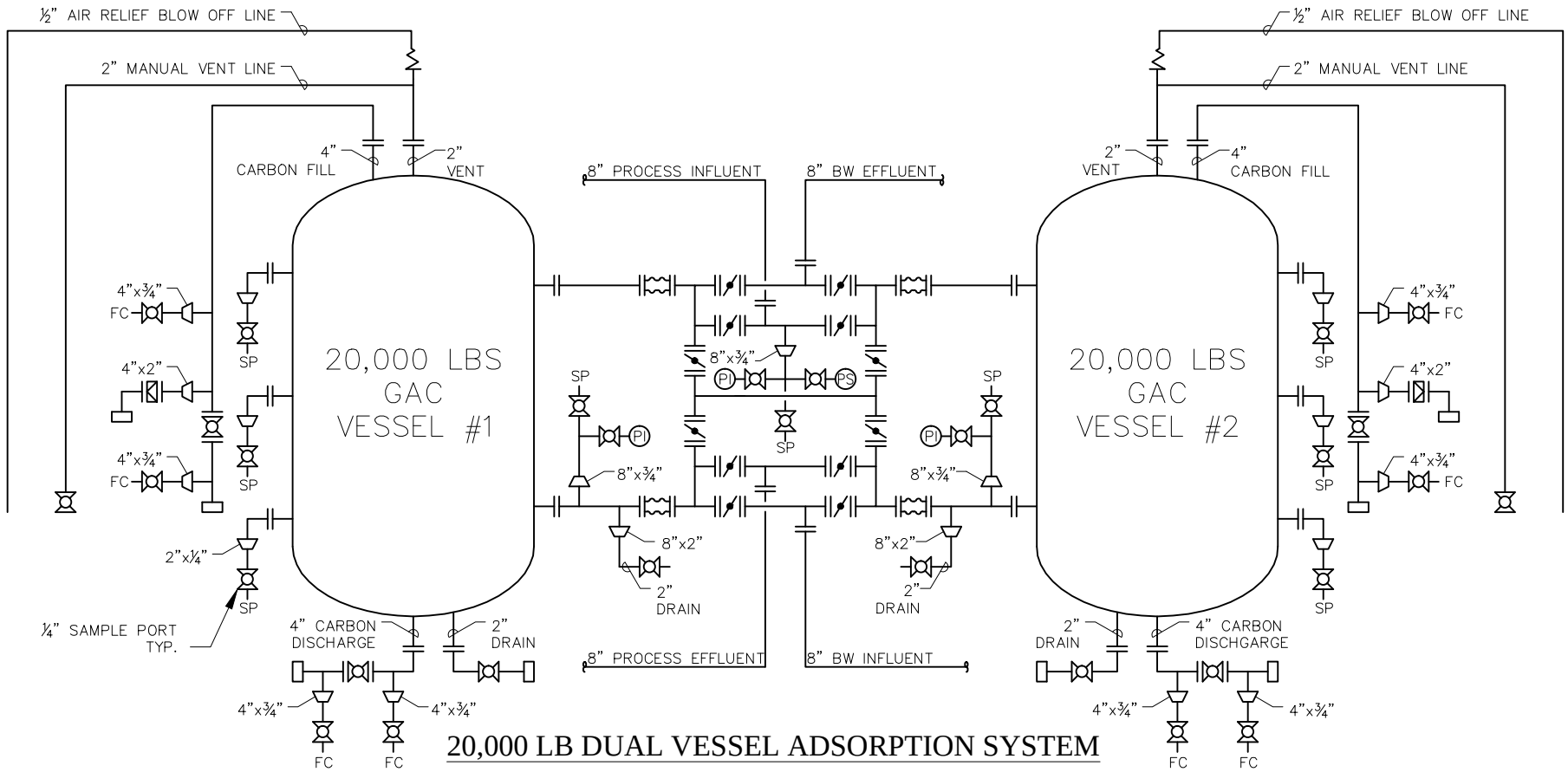

20,000 LB DUAL VESSEL ADSORPTION SYSTEM

LEGEND

- BALL VALVE
- FC — FLUSH CONNECTION
- SP — SAMPLE PORT
- EXPANSION JOINT
- REDUCER
- RUPTURE DISK
- PS — PRESSURE SWITCH
- AIR RELIEF VALVE
- QUICK CONNECT CAM LOCK FITTING
- MANUALLY OPERATED BUTTERFLY VALVE
- PI — PRESSURE GUAGE

NO.	REVISION	BY	DATE

PROJECT

CB&I

EXTRACTION & TREATMENT SYSTEM

PROJ. NO.	CS GROU150024
P.O. NO.	1116799-00 OP

THIS DRAWING AND DESIGN ARE THE PROPERTY OF TIGG CORP. AND SHALL NOT BE REPRODUCED IN WHOLE OR IN PART, NOR EMPLOYED FOR ANY PURPOSE OTHER THAN SPECIFICALLY PERMITTED IN WRITING BY TIGG CORP. THIS DRAWING LOANED SUBJECT TO RETURN ON DEMAND.

DRAWN BY	JB
DESIGN BY	JB
CHKD. BY	JI
DATE	2/17/15
SCALE	NTS

TIGG LLC.

KIRKLAND AFB

P&ID

C15-004-001

REV. 6

GENERAL ARRANGEMENT DRAWING

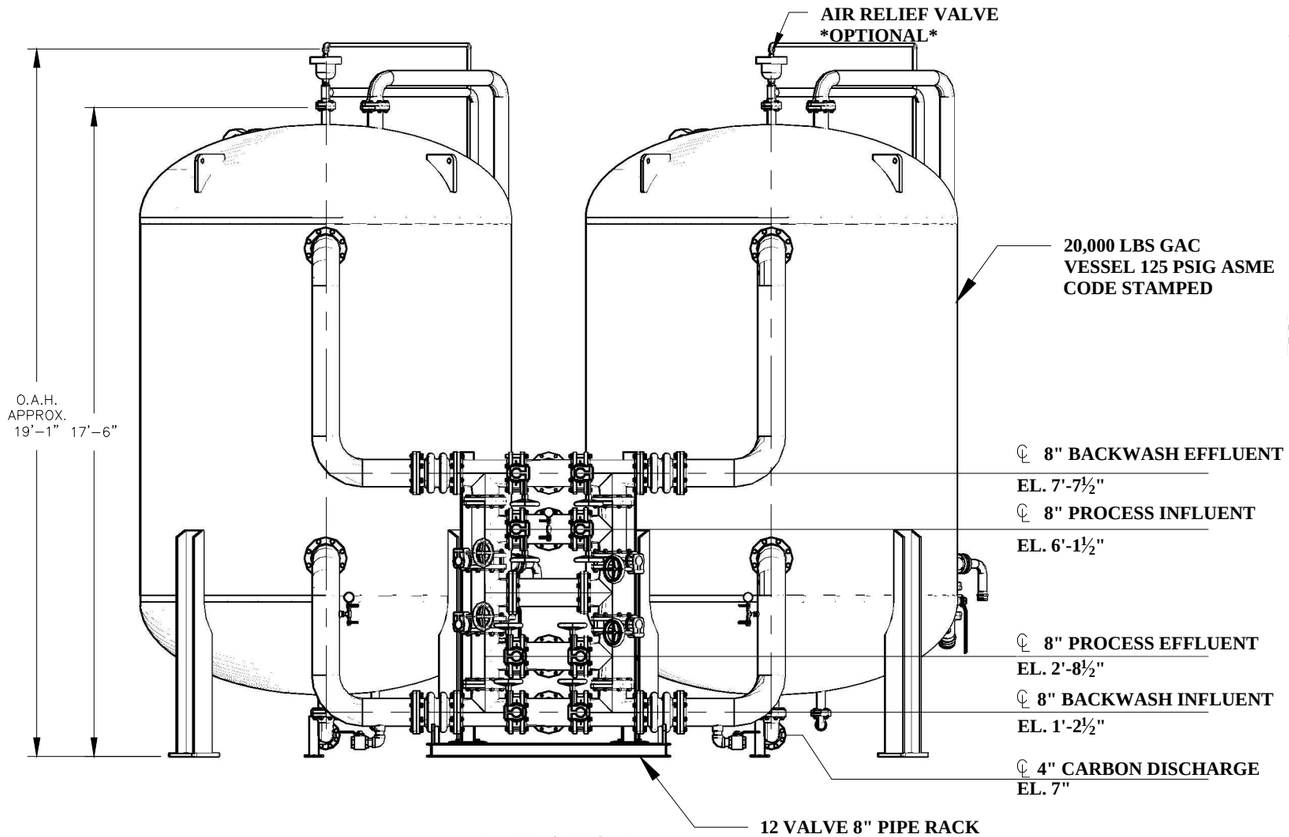

ELEVATION

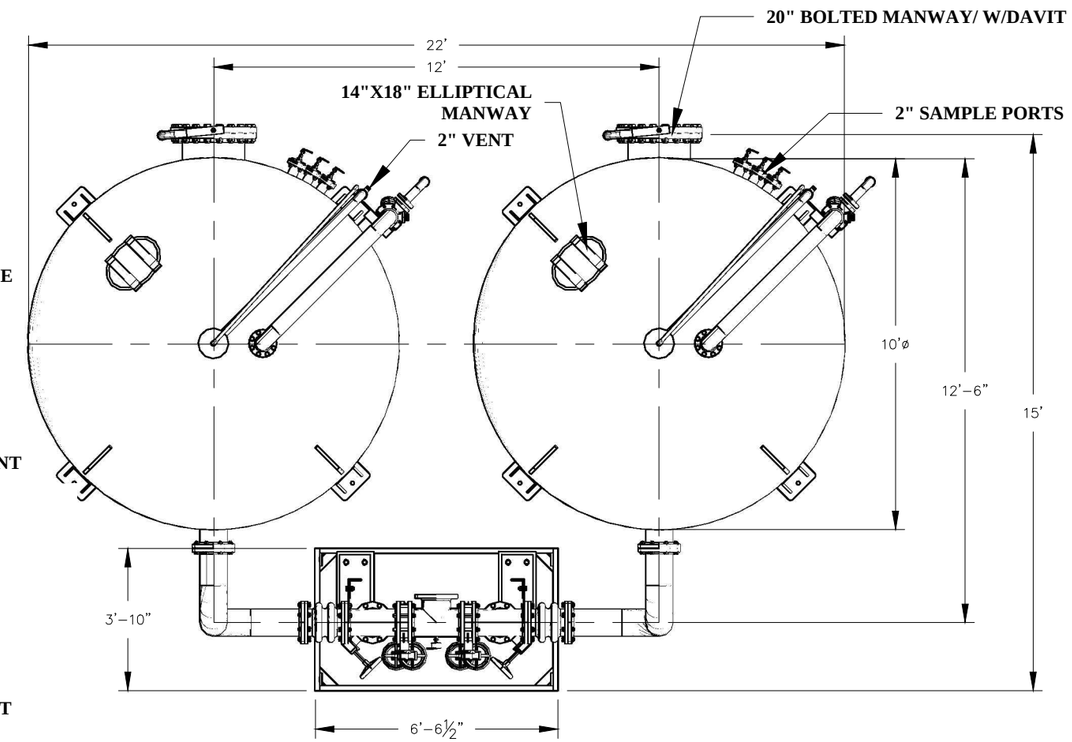

PLAN

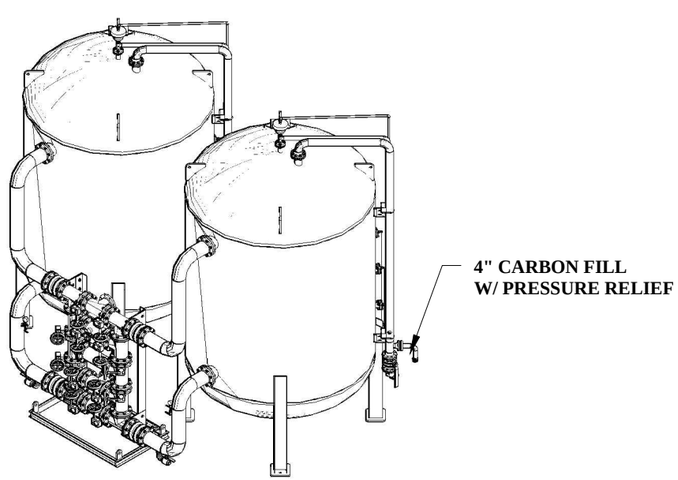

EMPTY VESSEL WT. (1):	13,000 LBS
VESSEL OPERATING WT. (1):	79,000 LBS
PIPE RACK OPERATING WT:	12,000 LBS
SYSTEM OPERATING WT.:	170,000 LBS

FOR REFERENCE ONLY

NO.	REVISION	BY	DATE
3	ADD ADD 2" MANUAL VENT & EFFLUENT DRAIN	JB	3/21/14
2	ADD EXPANSION JOINTS	JB	1/10/13
1	ADD SAMPLE PORTS TO VESSEL	RC	12/19/12

PROJECT
CP-20K-10
(SYSTEM)

PROJ. NO. SALES

P.O. NO.

THIS DRAWING AND DESIGN ARE THE PROPERTY OF TIGG CORP. AND SHALL NOT BE REPRODUCED IN WHOLE OR IN PART, NOR EMPLOYED FOR ANY PURPOSE OTHER THAN SPECIFICALLY PERMITTED IN WRITING BY TIGG CORP. THIS DRAWING LOANED SUBJECT TO RETURN ON DEMAND.

DRAWN BY	JB
DESIGN BY	JB
CHKD. BY	BB
DATE	2/9/10
SCALE	NTS

TIGG LLC.

SYSTEM GENERAL ARRANGEMENT

DWG. NO. CP-20K-10-1003

REV. 3

VESSEL DRAWINGS

MARK	SERVICE	DESCRIPTION	LOCATION
N6	AIR RELIEF	2" 150# FFSO FLANGE	TOP HEAD
N5	DRAIN	2" 150# FFSO FLANGE	BOTTOM HEAD
N4	CARBON DISCHARGE	4" 150# FFSO FLANGE	BOTTOM HEAD
N3	CARBON FILL/PRES. RELIEF	4" 150# FFSO FLANGE	TOP HEAD
N2	OUTLET	8" 150# FFSO FLANGE	SHELL
N1	INLET	8" 150# FFSO FLANGE	SHELL
M2	MANWAY	20" 150# FFSO W/ DAVIT	SHELL
M1	MANWAY	14"x18" ELL. MANWAY	TOP HEAD

NOZZLE SCHEDULE

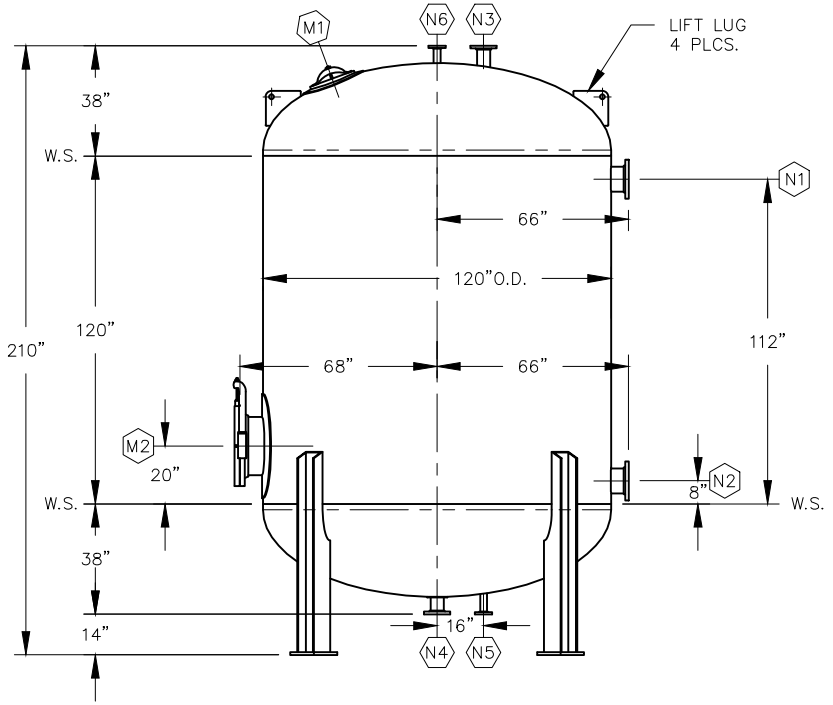

ELEVATION

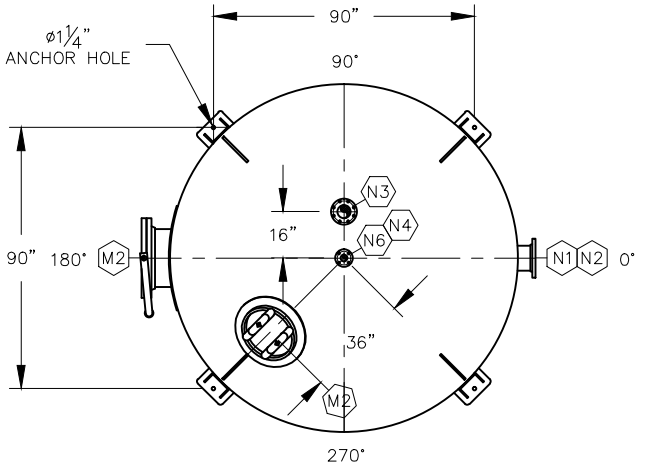

PLAN

VESSEL STANDARDS

VESSEL MATERIALS : SA-516-70	VESSEL ACCESS : 20" BOLTED MANWAY W/ DAVIT
LINING : NSF APPROVED VINYL ESTER	LIQUID DRAIN ASSEMBLY : 2" 150# FFSO FLANGE
EXTERIOR PAINT : EPOXY BASE / URETHANE TOP COAT	TOTAL VOLUME : 1055 FT^3
HEAD THICKNESS : ½" NOM.	SHIP WT. EMPTY : 11783 LBS
SHELL THICKNESS : ½" NOM.	MAX. OPERATING PRESSURE : 125 PSIG/-15 PSIG (VAC.)
INTERNALS : PVC	MAX. OPERATING TEMPERATURE. : 150°F

NO.	REVISION	BY	DATE
1	REVISE FLANGE TYPE & LINING	JB	7/5/11

PROJECT

CP-20K-10

PROJ. NO. SALES

P.O. NO.

THIS DRAWING AND DESIGN ARE THE PROPERTY OF TIGG CORP. AND SHALL NOT BE REPRODUCED IN WHOLE OR IN PART, NOR EMPLOYED FOR ANY PURPOSE OTHER THAN SPECIFICALLY PERMITTED IN WRITING BY TIGG CORP. THIS DRAWING LOANED SUBJECT TO RETURN ON DEMAND.

DRAWN BY	JB
DESIGN BY	BB
CHKD. BY	BB
DATE	2/28/11
SCALE	NTS

TIGG corporation

PLAN & ELEVATION

CP-20K-10-1001

REV. 1

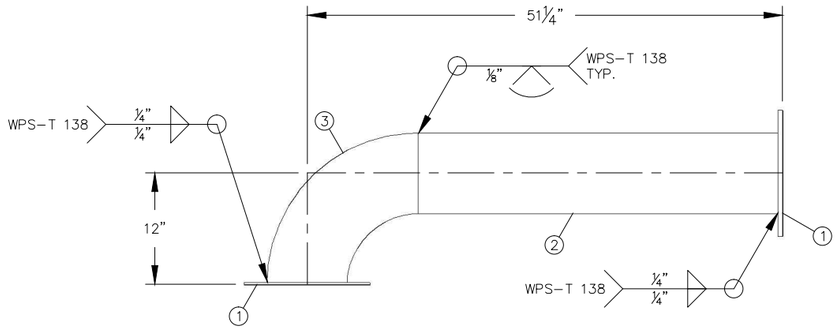

DISCHARGE FLANGE CONNECTION

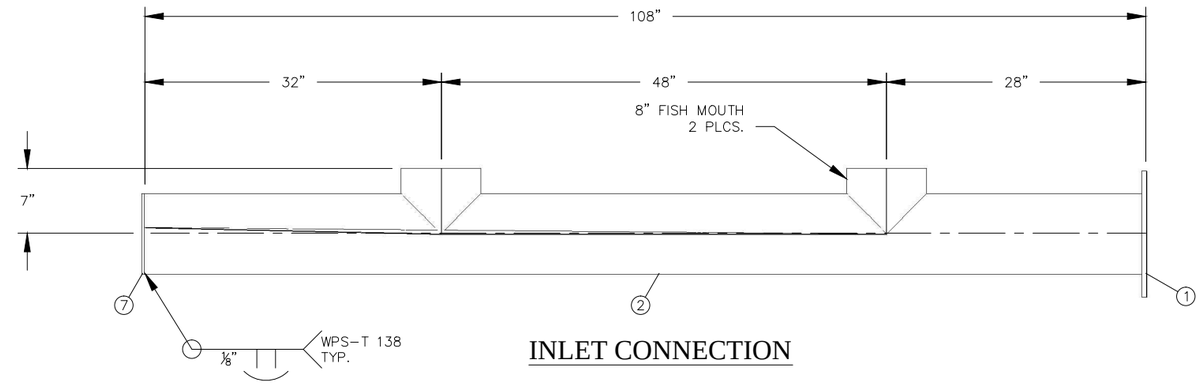

INLET CONNECTION

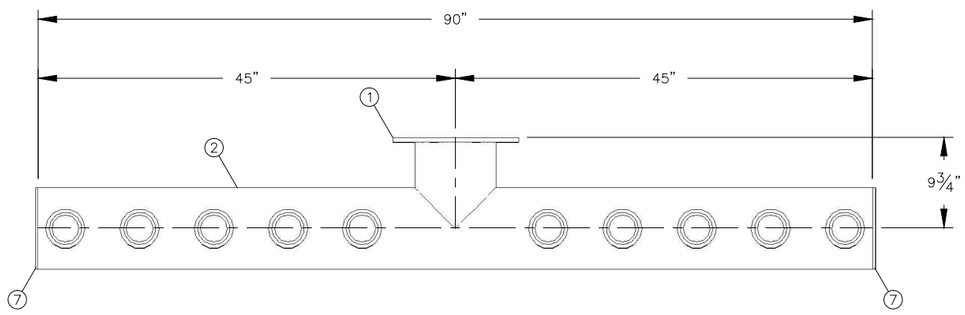

DISCHARGE LATERAL CONNECTION

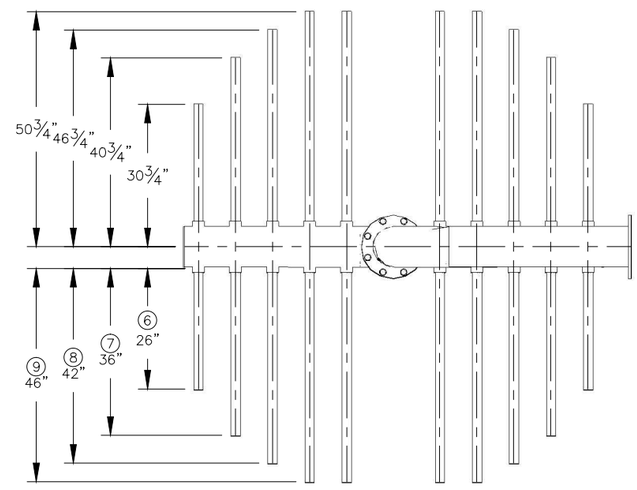

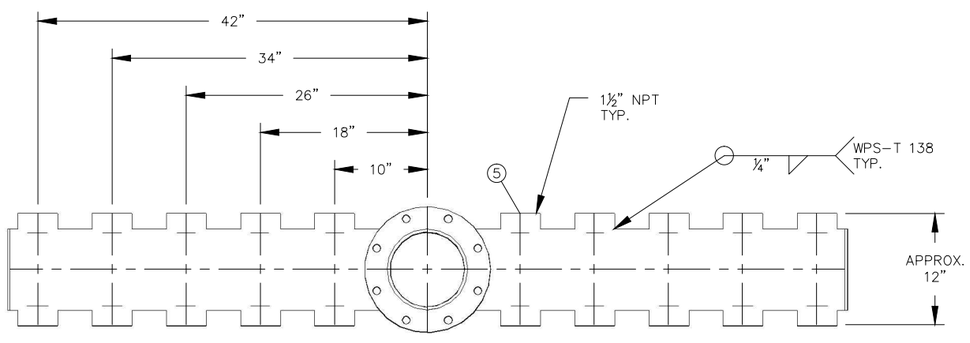

DISCHARGE LATERAL CONNECTION

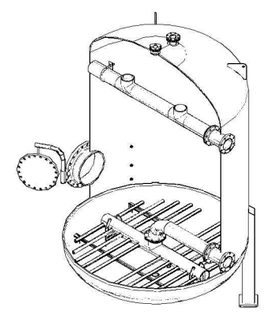

RELEASED FOR
FABRICATION

ITEM	QTY.	DESCRIPTION	MATERIAL
	1	8" U–BOLT	304SS
	20	1½" U–BOLT	304SS
	48	¾"ø WASHER	304SS
	24	¾"ø HEAVY HEX NUT	18–8 OR BETTER
	24	¾"ø×2" BOLT	18–8 OR BETTER
	3	8" 150# FULL FACE GASKET	NEOPRENE
9	8	1½" WEDGE WIRE 0.010"SLOTTED PIPE 46" LONG	SA–182 304L
8	4	1½" WEDGE WIRE 0.010"SLOTTED PIPE 42" LONG	SA–182 304L
7	4	1½" WEDGE WIRE 0.010"SLOTTED PIPE 36" LONG	SA–182 304L
6	4	1½" WEDGE WIRE 0.010"SLOTTED PIPE 26" LONG	SA–182 304L
5	20	1½" NPT 3000# HALF COUPLING	SA–182 304L
4	3	8⅝"ø×¼" END PLATE	SA–240 304L
3	1	8" SCH 10 90° LR ELBOW	SA–312 304L
2	22'	8" SCH 10 PIPE	SA–312 304L
1	4	8" 150# FABRICATED FLANGE ½" TK.	SA–240 304L

BILL OF MATERIALS

NO.	REVISION	BY	DATE

PROJECT

CP–20K–10

PROJ. NO.	PLANT STANDARDS
P.O. NO.	

THIS DRAWING AND DESIGN ARE THE PROPERTY OF TIGG CORP. AND SHALL NOT BE REPRODUCED IN WHOLE OR IN PART, NOR EMPLOYED FOR ANY PURPOSE OTHER THAN SPECIFICALLY PERMITTED IN WRITING BY TIGG CORP. THIS DRAWING LOANED SUBJECT TO RETURN ON DEMAND.

DRAWN BY	JB
DESIGN BY	BB
CHKD. BY	
DATE	3/11/11
SCALE	NTS

TIGG corporation

VESSEL INTERNALS
(STAINLESS STEEL)

DWG. NO. CP–20K–10–2004(SS)

REV. 0

VALVE POSITION TABLES
SERIES & PARALLEL FLOW

TABLE 1- SERIES FLOW

VESSEL V1 TO VESSEL V2

VALVE POSITIONS

OPEN VALVES	CLOSED VALVES
2	1
3	4
6	5
7	8
	9
	10
	11
	12
	13
	14
	15
	16

VESSEL V2 TO VESSEL V1

VALVE POSITIONS

OPEN VALVES	CLOSED VALVES
1	2
4	3
5	6
8	7
	9
	10
	11
	12
	13
	14
	15
	16

TABLE 2-PARALLEL FLOW

VESSEL V1 & VESSEL V2 OPERATING

VALVE POSITIONS

OPEN VALVES	CLOSED VALVES
1	3
2	4
7	5
8	6
	9
	10
	11
	12
	13
	14
	15
	16

PARALLEL FLOW

VESSEL V1 ON-LINE, VESSEL V2 IDLE

VALVE POSITIONS

OPEN VALVES	CLOSED VALVES
2	1
8	3
	4
	5
	6
	7
	9
	10
	11
	12
	13
	14
	15-16

TABLE 3 VESSEL V1 ON-LINE, VESSEL V-2 BACKWASH

VALVE POSITIONS

OPEN VALVES	CLOSED VALVES
2	1
	3
8	4
9	5
11	6
	7
	10
	12
	13
	14
	15
	16

PARALLEL FLOW

TABLE 4 VESSEL V-1 ON-LINE, VESSEL V2 UNLOADING CARBON

VALVE POSITIONS

OPEN VALVES	CLOSED VALVES
2	1
8	3
15	4
	5
	6
	7
	9
	10
	11
	12
	13
	14
	16

VESSEL V1 ON-LINE, VESSEL V-2 LOADING CARBON

VALVE POSITIONS

OPEN VALVES	CLOSED VALVES
2	1
8	3
13	4
	5
	6
	7
	9
	10
	11
	12
	14
	15
	16

PARALLEL FLOW

VESSEL V2 ON-LINE, V1 IDLE

VALVE POSITIONS

OPEN VALVES	CLOSED VALVES
1	2
7	3
	4
	5
	6
	8
	9
	10
	11
	12
	13
	14
	15-18

TABLE 5 VESSEL V-2 ON-LINE, VESSEL V-1 BACKWASH

VALVE POSITIONS

OPEN VALVES	CLOSED VALVES
1	2
7	3
	4
10	5
12	6
	8
	9
	11
	13
	14
	15
	16

PARALLEL FLOW

TABLE 6 VESSEL V-2 ON-LINE, V-1 UNLOADING CARBON

VALVE POSITIONS

OPEN VALVES	CLOSED VALVES
1	2
7	3
16	4
	5
	6
	8
	9
	10
	11
	12
	13
	14
	15

VESSEL V-2 ON-LINE, V-1 LOADING CARBON

VALVE POSITIONS

OPEN VALVES	CLOSED VALVES
1	2
7	3
14	4
	5
	6
	8
	9
	10
	11
	12
	13
	15
	16

VESSEL MEDIA

TIGG 5DC 1240 NSF

Virgin Liquid Phase Coconut Based Activated Carbon

www.TIGG.com

DESCRIPTION

TIGG 5DC 1240 NFS is a coconut-based activated carbon specially designed to remove low concentrations of contaminants in potable water applications. This activated carbon combines high microporosity and high surface area to permit effective removal of THMs, chlorinated hydrocarbons and other contaminants.

TYPICAL PROPERTIES	TIGG 5DC 1240 NSF
U.S Sieve, 90 wt% min	12 x 40
Iodine Number, mg/g, min	1100
Apparent Density, (dense packing)	
g/cc	0.48 - 0.50
lbs/ft^3	29 - 31
Total Surface Area, m2/g	1150 - 1200
Ash (ASTM-2866), % w/w	3.0
Abrasion No. - min	85

TYPICAL APPLICATIONS

In TIGG liquid phase potable water treatment equipment, TIGG 5DC 1240 NSF will effectively remove organics listed above as well as chlorine, phenols, pesticides, taste & odor, etc. TIGG 5DC 1240 NSF meets AWWA Standard B-600-74, ANSI/NSF Standard 61 for drinking water applications.

Standard packaging of the activated carbon is in 1000 pound supersaks.

Wet drained activated carbon adsorbs oxygen from the air. Therefore, when workers need to enter a vessel containing wet activated carbon, they should follow confined space/low oxygen level procedures. Activated carbon dust does not present an explosion hazard.

800-925-0011
www.TIGG.com
www.TIGGtanks.com

TIGG Corporation
1 Willow Avenue
Oakdale, PA 15071

TIGG Corporation
Purifying Air & Water

PRESSURE GAGE INFORMATION

XSEL™ Process Gauge - Stainless Steel
Type 232.34 - Dry Case
Type 233.34 - Liquid-filled Case

WIKA Datasheet 23X.34

Applications

- For applications with high dynamic pressure pulsations or vibration a liquid filled case and socket restrictor are available
- Suitable for corrosive environments and gaseous or liquid media that will not obstruct the pressure system
- Process industry: chemical/petrochemical, power stations, mining, on and offshore, environmental technology, mechanical engineering and plant construction

Special features

- Excellent load-cycle stability and shock resistance
- Solid front thermoplastic case
- Positive pressure ranges to 30,000 psi
- XSEL™ Process Gauge with 5 year warranty on gauge and 10 year warranty on pressure system (see terms and condition
- All lower mount connection gauges are factory prepared for liquid filling

(LBM: must install membrane prior to field filling)

Bourdon Tube Pressure Gauge Model 232.34

Standard Features

Design
ASME B40.100

Sizes
4½" & 6" (115 & 160 mm) dial size

Accuracy class
± 0.5% of span (ASME B40.100 Grade 2A)
± 1.0% of span (ASME B40.100 Grade 1A)
(for 20,000 psi range and above)

Ranges
Vacuum / Compound to 200 psi
Pressure from 15 psi to 30,000 psi
or other equivalent units of pressure or vacuum

Working pressure

Steady:	full scale value
Fluctuating:	0.9 x full scale value
Short time:	1.5 x full scale value

Operating temperature
Ambient: -40°F to +150°F (-40°C to +66°C) - dry
-4°F to +150°F (-20°C to +66°C) - glycerine filled
-40°F to +150°F (-40°C to +66°C) - silicone filled
Medium: max. +212°F (+100°C) (See Note 1 on reverse)

Temperature error
Additional error when temperature changes from reference temperature of 68°F (20°C) ±0.4% for every 18°F (10°C) rising or falling. Percentage of span.

Weather protection
Weather resistant (NEMA 3 / IP54) - without membrane
Weather tight (NEMA 4X / IP65) - dry case or filled case with membrane installed

Pressure connection
Material: 316L stainless steel
Lower mount (LM) or lower back mount (LBM)
1/4" or 1/2" NPT with M4 internal tap

Restrictor
Material: Stainless steel (0.6 mm)

Bourdon tube
Material: 316L stainless steel
≤ 1,000 PSI: C-type
≥ 1,500 PSI: helical type

Movement
Stainless steel. Internal stop pin at 1.3 x full scale
Overload and underload stops - standard
Dampened movement - optional

Dial
White aluminum with black lettering, stop pin at 6 o'clock

Pointer
Black aluminum, adjustable

Case
Black fiberglass-reinforced thermoplastic (POCAN)
Solid front, blowout back
Turret-style case with built in rear flange lugs

WIKA®
Part of your business

Window
Clear acrylic with Buna-N gasket

Case filling
Glycerine 99.7% - Type 233.34

Note 1: The maximum continuous media temperature for this gauge is 212°F. However, higher temperatures can be maintained safely for short term exposure per table to the right. The user should consider temperature error and gauge component degradation when exposing gauge to any media or ambient temperature above 212°F. For continuous use in either ambient or media temperatures above 212°F, a diaphragm seal or other heat dissipating means is recommended. Consult factory for technical inquiries and application assistance.

Optional extras

- Silicone dampened movement
- Panel mounting adaptor kit (field assembled)
- Silicone case filling
- Halocarbon case filling
- Cleaned for oxygen service
- Instrument glass or safety glass window
- Drag pointer (maximum reading indicator)
- Alarm contacts switches (magnetic or inductive)
- Special process connections
- Custom dial layout
- External zero adjustment (4.5" size only)

Short term, intermittent maximum media temperature limits
(Optional glass window required for all these temperatures)

500°F (260 °C) -	Dry Gauge
250°F (130°C) -	Liquid filled gauge
300°F (150°C) -	Dampened movement gauge

Dimensions

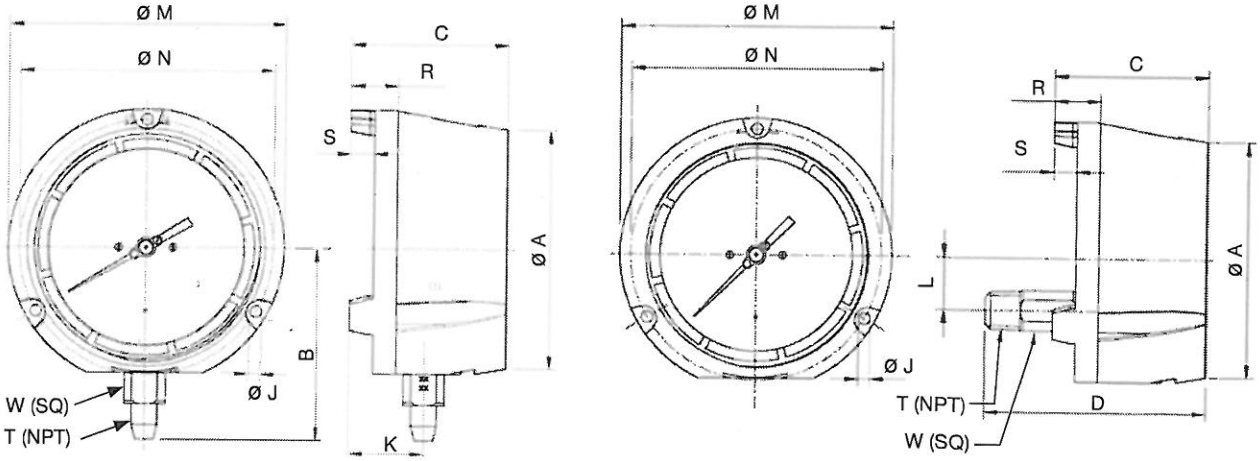

Size		A	B	C	D	J	K	L	M	N	R	S	T	W	Weight[1]	
4.5"	mm	128	103	84	120.3	6.3	40	28.5	148	136.5	25	12.5		22	2 lb.	dry
	in	5	4.06	3.31	4.74	0.248	1.57	1.12	5.83	5.37	0.99	0.49	1/2"	0.87	3 lb.	filled
6"	mm	164	122.5	88	123.4	7.1	40.2	28.5	190	177.8	25.4	12.7		22	3 lb.	dry
	in	6.46	4.82	3.46	4.86	0.28	1.58	1.12	7.5	7	1	0.5	1/2"	0.87	4 lb.	filled

[1] Weight without optional accessories

WIKA Datasheet 23X.34 06/2010

Ordering information
Pressure gauge model / Nominal size / Scale range / Size of connection / Optional extras required
Specifications and dimensions given in this leaflet represent the state of engineering at the time of printing.
Modifications may take place and materials specified may be replaced by others without prior notice.

WIKA Instrument Corporation
1000 Wiegand Boulevard
Lawrenceville, GA 30043
Tel (770) 513-8200 Toll-free 1-888-WIKA-USA
Fax (770) 338-5118
E-Mail info@wika.com
www.wika.com

BUTTERFLY VALVE & OPERATOR INFORMATION

Bray CONTROLS

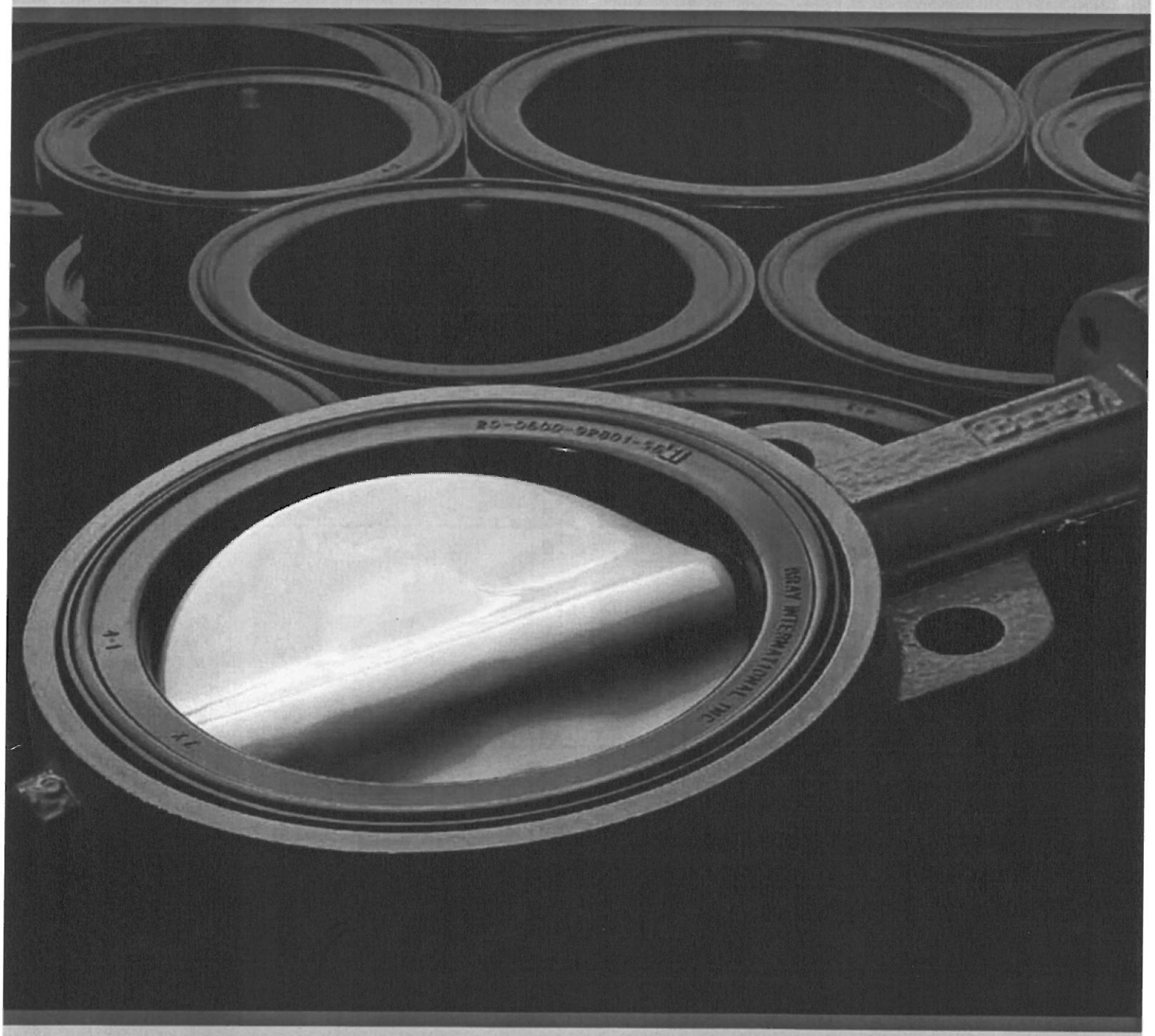

RESILIENT SEATED

Butterfly Valves

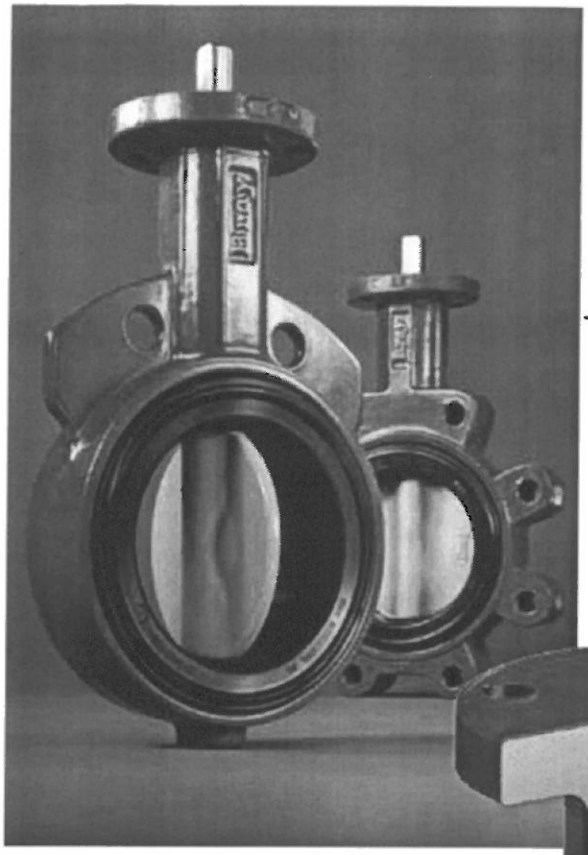

SERIES 30/31 2"-20" (50mm-500mm)

PRESSURE RATINGS		
BIDIRECTIONAL BUBBLE-TIGHT SHUT-OFF – Standard Disc* Downstream Flanges/Disc in Closed Position		
S30/31 Standard Disc*	2-12" (50-300mm)	175 psi (12 Bar)
	14-20" (350-500mm)	150 psi (10.3 Bar)
DEAD-END SERVICE – Lug Bodies/Standard Disc* No Downstream Flanges/Disc in Closed Position		
S31	2-12" (50-300mm)	75 psi (5.2 Bar)
	14-20" (350-500mm)	50 psi (3.4 Bar)
BODY: 250 psi (17.2 Bar) CWP		

*For low pressure application, Bray offers a standard reduced disc diameter to decrease seating torques and extend seat life, thus increasing the valve's performance and reducing actuator costs.

VELOCITY LIMITS For On/Off Services:	
Fluids 30 ft/sec (9 m/s)	**Gases** 175 ft/sec (54 m/s)

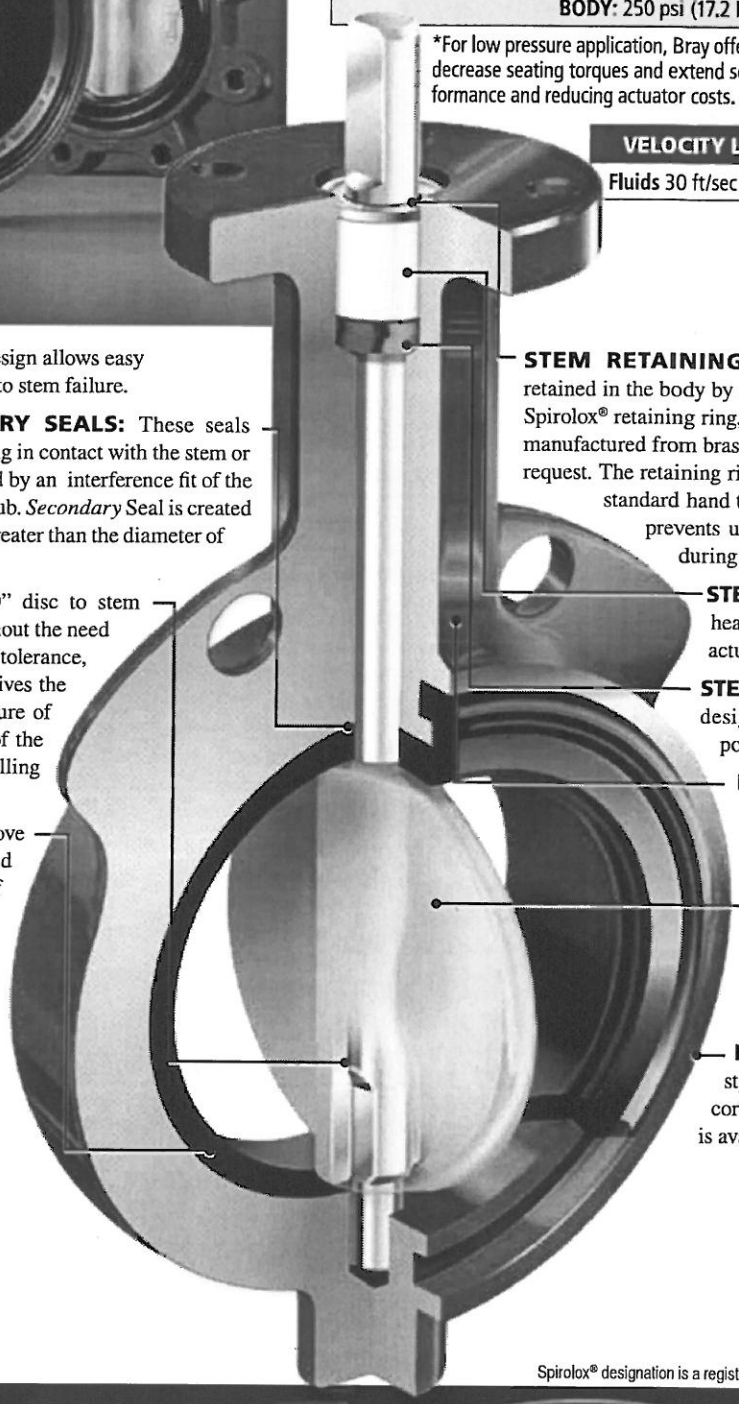

High strength through-stem design allows easy disassembly and reduced disc to stem failure.

PRIMARY & SECONDARY SEALS: These seals prevent line media from coming in contact with the stem or body. *Primary* Seal is achieved by an interference fit of the molded seat flat with the disc hub. *Secondary* Seal is created because the stem diameter is greater than the diameter of the seat stem hole.

STEM: Precision double "D" disc to stem connection drives the disc without the need for screws or pins. The close tolerance, double "D" connection that drives the valve disc is an exclusive feature of the Bray valve. Disassembly of the Bray stem is just a matter of pulling the stem out of the disc.

SEAT: Bray's tonque and groove seat design lowers torque and provides complete isolation of flowing media from the body. The seat also features a molded O-ring which eliminates the use of flange gaskets.

STEM RETAINING ASSEMBLY: The stem is retained in the body by means of a unique Stainless Steel Spirolox® retaining ring, a thrust washer and two C-rings, manufactured from brass as standard, stainless steel upon request. The retaining ring may be easily removed with a standard hand tool. The stem retaining assembly prevents unintentional removal of the stem during field service.

STEM BUSHING: Non-corrosive, heavy duty acetal bushing absorbs actuator side thrust.

STEM SEAL: Double "U" cup seal design is self-adjusting and gives positive sealing in both directions.

NECK: Extended neck length allows for 2" of piping insulation and is easily accessible for mounting actuators.

DISC: Casting is spherically machined and hand polished to provide a bubble-tight shut off, minimum torque, and longer seat life.

BODY: One-piece wafer or lug style. Polyester coating for excellent corrosion resistance. Nylon 11 coating is available as an option.

Spirolox® designation is a registered trademark of Kaydon Ring and Seal, Inc.

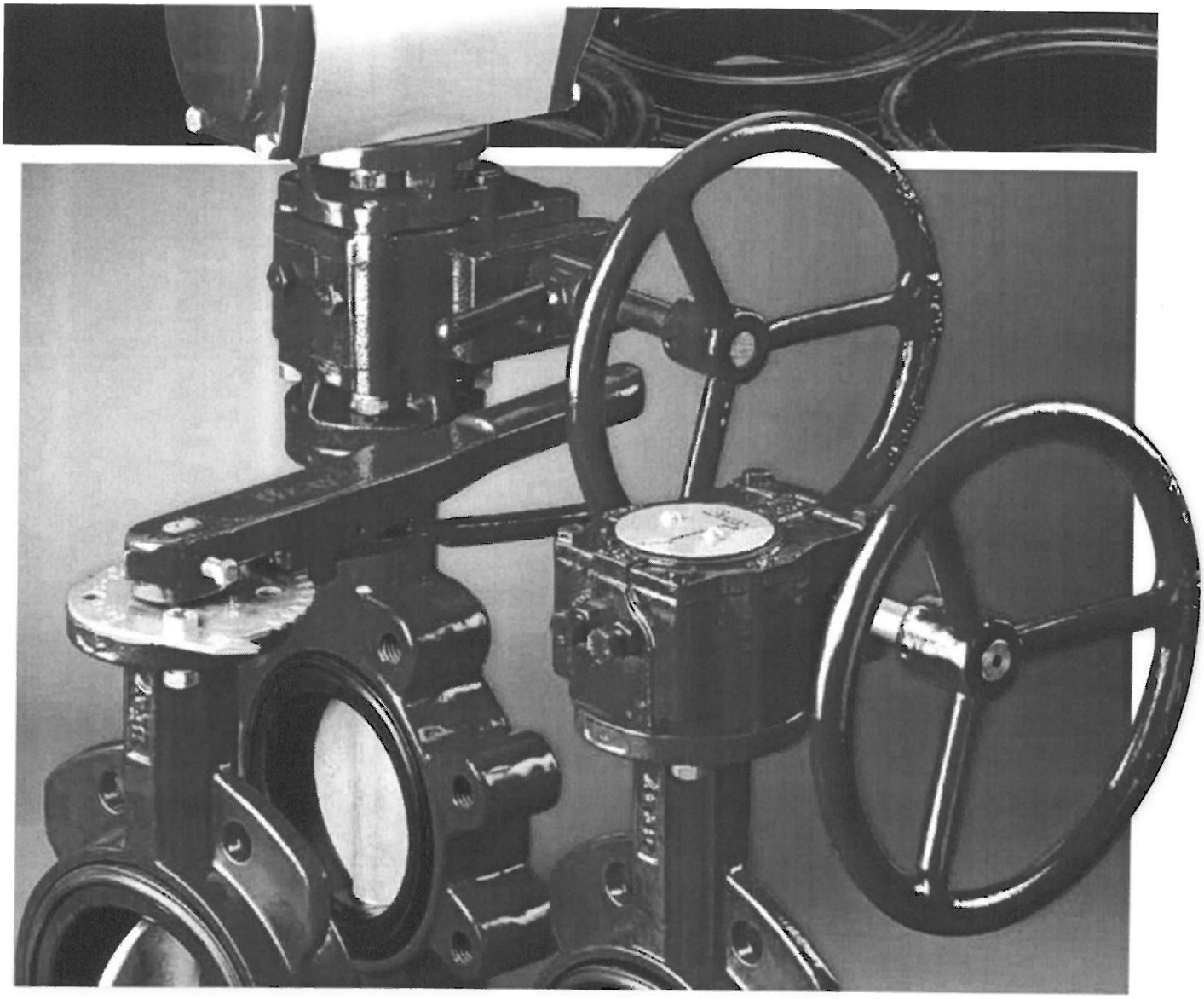

MANUAL OPERATORS

Bray Controls offers three operators for manual control of valve position. All manual operators mount directly to Bray valves, and all are epoxy coated for excellent corrosion, abrasion and impact resistance.

MANUAL OPERATORS	
SERIES 1 - Handle	1"-12" (25mm -300mm)
SERIES 4 - Gear Operator	2"-48" (50mm -1200mm)
SERIES 5 - Declutchable Gear Operator	2"-36" (50mm -900mm)

SERIES 1 HANDLE & NOTCH PLATE Bray offers two handles for on-off and throttling service – one for resilient seated valves from 1"-12" (25mm-300mm), and a high torque handle for high pressure valves from 2 1/2"- 8" (65mm-200mm). These quarter turn handles have a locking spring and a directional pointer for valve disc position indication. Bolted notch plates are offered. For resilient seated valves a 10 position plate is standard. For high pressure valves an 8 position plate is standard. Both contain on-off stops to prevent over rotation of the valve. Optionally available are an infinite position plate, a 180° notch plate, a memory stop, a padlock kit, and a 2" square nut version.

SERIES 4 GEAR OPERATOR For heavy duty on-off and throttling service of 2"-48" (50mm-1200mm) valves, the Series 4 is self lubricated for smooth, trouble-free operation. The rugged, cast iron body with O-ring body seals is weatherproof to IP65. A self-locking worm and worm gear drive holds the valve in the desired position. Features include a readily accessible handwheel, a valve position indicator and mechanical travel stops which permit field adjustment of valve movement to specific degrees of rotation. Optionally available are chainwheel accessories, padlock kits and 2" square nut versions. A Gear Operator with a Stainless Steel housing is also available for valve sizes 1"-16".

SERIES 5 DECLUTCHABLE GEAR OPERATOR Available for 2"-36" (50mm-900mm) valves. This operator is excellent for the safe handling of spring return actuators. During pneumatic operation, the worm of the gear unit is disengaged. Should the valve require opening or closing in the event of power loss, manual rotation of the declutch lever will provide a camming action and engage the worm to the segmented worm gear, allowing rotation of the valve using the handwheel. The Series 5 can be installed in the field with existing Bray pneumatic actuators.

Bray CONTROLS

OPERATION AND MAINTENANCE MANUAL

RESILIENT SEATED BUTTERFLY VALVES

20/21, 22/23, 30/31, 3A/3AH, 31H, 31U, 32/33, 35/36, 36H

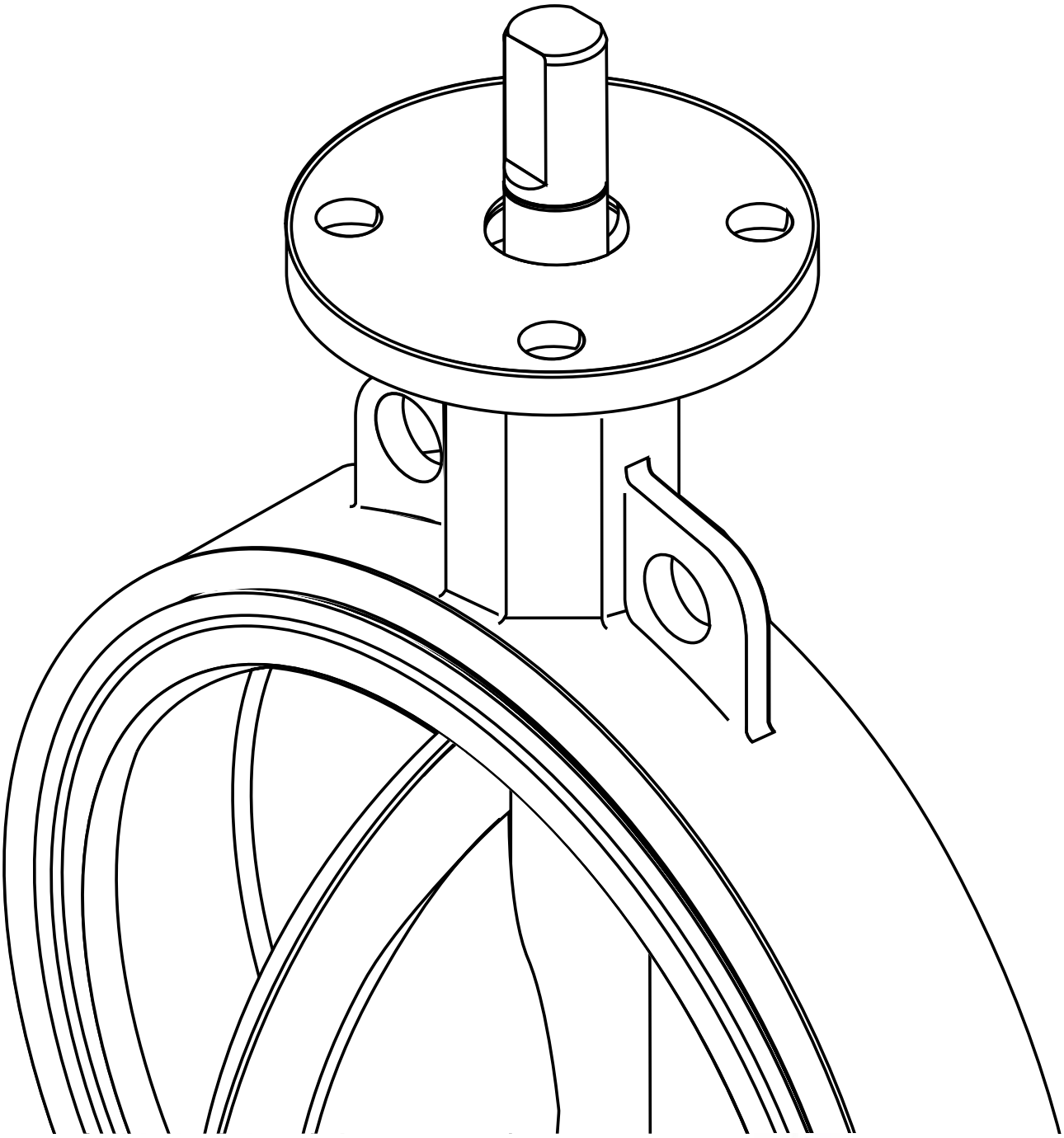

FOUNDED 1862

The High Performance Company

Table Of Contents:

PAGE

Safety Instructions: Definition Of Terms 1

Introduction 1

Shipment & Storage 1

Installation Considerations 2

Valves With Spring Return Actuators 2

Fail Open Assembly 2

Fail Closed Assembly 2

Valve Location And Orientation In Piping 2

Valve Orientation Diagrams 4-6

Installation Procedure 6-9

PTFE Seated Butterfly Valves in Plastic Flanges 9

Maintenance & Repair 9

Appendix 'A' - S20/21 Disassembly/Assembly Instructions 10-11

Appendix 'B' - S22/23 Disassembly/Assembly Instructions 12-13

Appendix 'C' - S30/31 Disassembly/Assembly Instructions 14-15

Appendix 'D' - S3A/3AH Disassembly/Assembly Instructions 16-17

Appendix 'E' - S31H Disassembly/Assembly Instructions 18-19

Appendix 'F' - S31U Disassembly/Assembly Instructions 20-21

Appendix 'G' - S32/33 Disassembly/Assembly Instructions 22-24

Appendix 'H' - S35/36 (Taper Pin Disc/Stem Connection)
Disassembly/Assembly Instructions 25-27

Appendix 'I' - S35/36 (Internal Spline or Keyed Disc/Stem Connection)
Disassembly/Assembly Instructions 28-33

Appendix 'J' - S36H Disassembly/Assembly Instructions 34-36

FOR INFORMATION ON THESE PRODUCTS AND OTHER BRAY PRODUCTS
PLEASE VISIT US AT OUR WEB PAGE - www.bray.com

SAFETY INSTRUCTIONS - DEFINITION OF TERMS

READ AND FOLLOW THESE INSTRUCTIONS
SAVE THESE INSTRUCTIONS

⚠	**WARNING**	indicates a potentially hazardous situation which, if not avoided, **could** result in death or serious injury.
⚠	**CAUTION**	indicates a potentially hazardous situation which, if not avoided, may result in minor or moderate injury.
	NOTICE	used without the safety alert symbol indicates a potential situation which, if not avoided, may result in an undesirable result or state, including property damage.

Introduction

Historical Experience

Based on over twenty years experience in the butterfly industry, Bray can state without question the majority of all field problems for resilient seated butterfly valves are directly related to poor installation procedures. For this reason, it is very important all distributor salespeople educate their customers regarding proper installation of resilient seated butterfly valves.

Butterfly Valve Seat / Disc Function

Before reviewing the proper installation, maintenance, and repair procedures for resilient seated butterfly valves, let's discuss the seat-disc function of a butterfly valve. The seat in a resilient seated butterfly valve has molded o-rings on its flange face. **As a result, no gaskets are required as these o-rings serve the function of a gasket.** The flange face and molded o-rings of the seat extend beyond the body face-to-face to ensure sealing at the flange faces. The seat material, which extends past the face is compressed in installation and flows toward the center of the valve seat I.D.

In essence, the elastomer seat acts as a liquid, and the displaced elastomer moves toward the point of least resistance. The seat I.D. of all resilient seated butterfly valves is smaller than the disc O.D. This difference, the disc-seat interference, plus the increased interference due to the elastomer movement toward the seat center after installation, has been engineered so as to be the basis for pressure rating capability and the related seating/unseating torques. **Any change in this interference due to improper installation directly affects the pressure rating and seating/unseating torques.**

Finally, unlike many valve types, the resilient seated butterfly valve's disc actually extends beyond the face of the valve body at given angles of opening (say, 30° or more) when installed between flanges.

⚠ **CAUTION**

It is very important before installation to ensure the critical chord dimension of the disc at the full open position is less than the adjacent pipe flange I.D.

Shipment & Storage

A. The seat, disc, stem and bushing of the resilient seated butterfly valve should be coated with silicone lubricant unless specified otherwise as recommended by Bray Technical Bulletin 1028.

B. The disc should be positioned at 10° open. **Note**: See page 2 for special considerations for valves with spring return actuators.

C. Valves should be stored indoors with a preferred temperature range from 40° F (4°C) to 85° F (29°C).

D. When valves are stored for a long time, open and close the valves once every 3 months.

E. Ship and store valves so that no heavy loads are applied to the bodies.

Installation Considerations – Piping and Valve Orientation and Placement

Piping and Flanged Compatibilities

Piping

These valves have been engineered so that the critical disc chord dimension at the full open position will clear the adjacent inside diameter of most types of piping, including Schedule 40, lined pipe, heavy wall, etc.

Metal Flanges

Resilient seated butterfly valves have been designed to be suitable for all types of flanges (ASME, DIN, JIS and other international flange standards), whether flat-faced, raised face, slip-on, weld-neck, etc. Proper alignment of any butterfly valve between flanges is critical to good performance of the valve. The flange bolts must also be evenly tightened around the circumference of the valve, providing consistent flange compression of the molded o-ring in the seat face.

Since Bray does not recommend the use of gaskets between flanges on resilient seated butterfly valves, a uniform flange face is critical to proper valve sealing. Most weld-neck and slip-on flanges conforming to ASME specifications have an appropriate flange face. Types A and B butt-weld stub-end flanges also provide a suitable mating surface for the molded o-ring.

It should be noted that Type C butt-weld stub-end flanges have an "as formed" flange face. The varying surface of this flange face can create sealing problems between any resilient-seated butterfly valve and the flange face. For this reason, Type C flanges are not recommended for use with resilient-seating butterfly valves.

Non-Metallic Flanges

When non-metallic flanges, such as plastic or PVC, are used with resilient seated butterfly valves, care must be taken not to over-tighten the flange bolts. The inherent flexibility of these non-metallic flange materials allow them to be over-tightened relatively easily. Flexing caused by this over-tightening can actually reduce the compression of the valve between the flanges, causing leaks between the valve and the flange face. Proper alignment and firm, even, but not excessive tightening of flange bolts are especially important with non-metallic flanges. In some cases, non-metallic flanges of low quality will not mate tightly with butterfly valves regardless of the care taken during installation.

Valves with Spring Return Actuators

1. Fail Closed Assemblies

The resilient seated butterfly valve disc is shipped in the full closed position since no air pressure is present to compress the springs and open the disc.

CAUTION

Installing the valve with the disc in the full closed position may create an increase in the valve seating torque, which may prevent the valve from opening.

It is recommended that the actuator be removed and the disc be opened to approximately 10° before and during installation.

2. Fail Open Assemblies

The resilient seated butterfly valve disc is shipped in the full open position since no air pressure is present to compress the springs and close the valve disc. As a result, the disc edge is exposed to possible damage, which will cause premature valve failure.

CAUTION

Use caution when handling and installing the valve to prevent damage to the disc edge. It is recommended that the actuator be removed and the disc closed before and during installation.

3. Valve Location

a. Resilient seated butterfly valves should be installed if possible a minimum of 6 pipe diameters from other line elements, i.e., elbows, pumps, valves, etc. of course, 6 pipe diameters are not always practical, but it is important to achieve as much distance as possible.

b. Where the resilient seated butterfly valve is connected to a check valve or pump, use an expansion joint between them to ensure the disc does not interfere with the adjacent equipment.

4. Valve Orientation

a. In general, Bray recommends the resilient seated valve be installed with the stem in the vertical position and the actuator mounted vertically directly above the valve; however, there are those applications as discussed below where the stem should be horizontal. **NOTE:** Bray does not recommend valves be installed in an upside-down position.

b. For slurries, sludge, mine tailing, pulp stock, dry cement, and any media with sediment or particles, Bray recommends the resilient seated valve be installed with the stem in the horizontal position with the lower disc edge opening in the downstream direction.

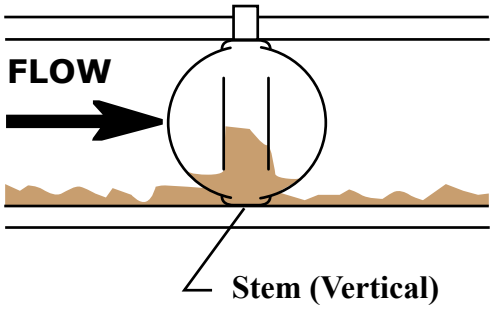

INCORRECT INSTALLATION

Sludge builds up on disc

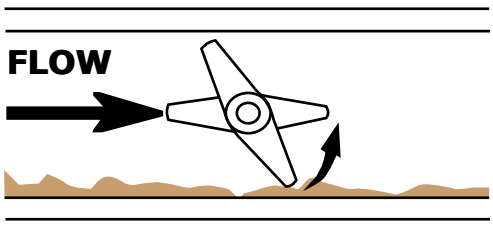

Stem (Horizontal)

CORRECT INSTALLATION

Sludge passes under disc

Valve Orientation (Continued)

c. Resilient seated butterfly valve located at the discharge of a pump should be oriented as follows:

	INCORRECT INSTALLATION	CORRECT INSTALLATION
i.) For centrifugal Pump – Pump shaft horizontal and stem vertical	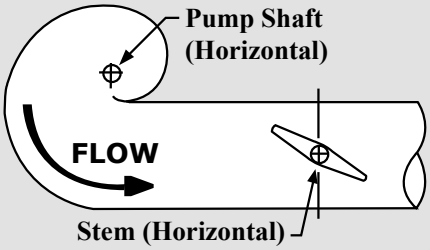	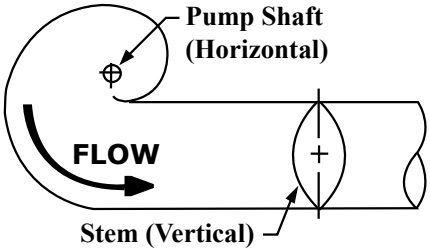
ii.) Centrifugal Pump – Pump shaft vertical & stem horizontal	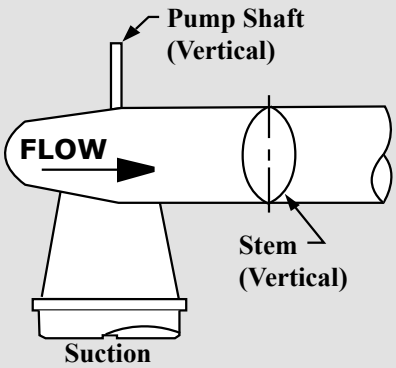	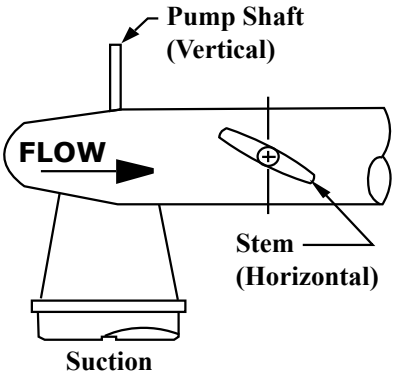
iii.) Axial Pump – Pump shaft vertical & stem vertical	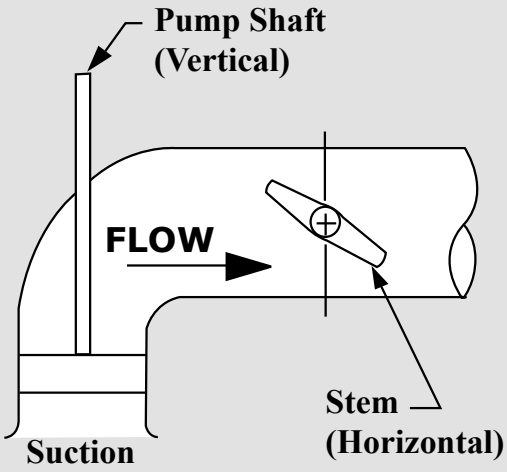	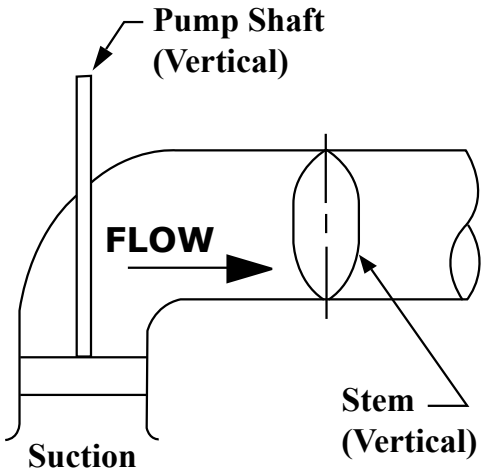

Valve Orientation (Continued)

d. Butterfly valves located downstream of a bend or pipe reducer should be oriented as follows:

	INCORRECT INSTALLATION	CORRECT INSTALLATION
i.) Bend	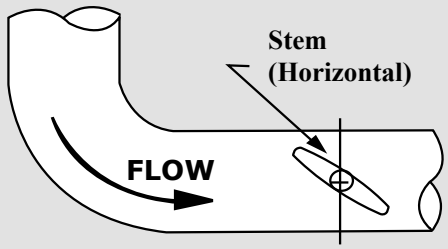	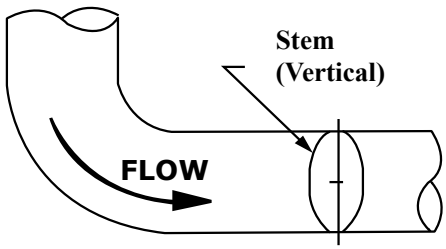
ii.) Tee	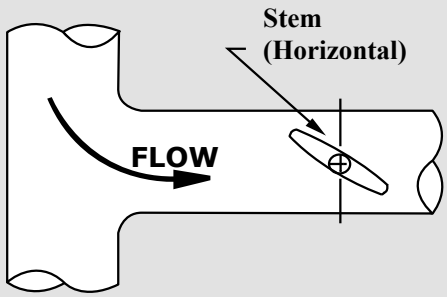	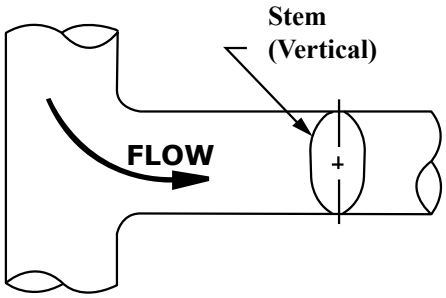
iii.) Pipe Reducer	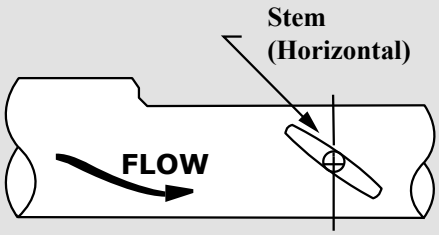	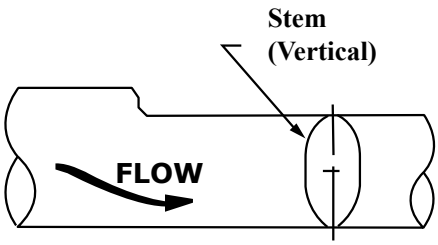

Valve Orientation (Continued)

e. Butterfly valves in combination for control/isolation applications should be installed as follows:

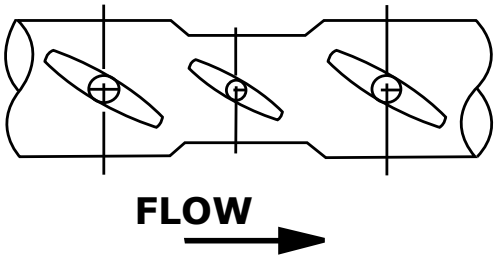

INCORRECT INSTALLATION

Combination with all valve stems in the same direction accelerates possible noise, vibration, & erosion problems.

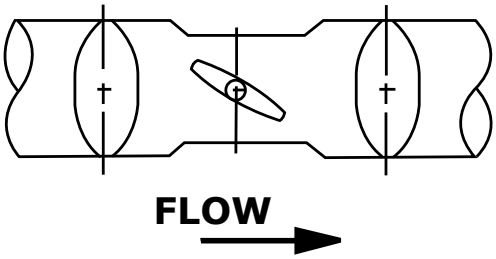

CORRECT INSTALLATION

Combination with the stem of the control valve at right angle to those of other valves tends to cancel the drift of the fluid, and reduces noises, vibration, and erosion.

Installation Procedure

A. General Installation

1. Make sure the pipeline and pipe flange faces are clean. Any foreign material such as pipe scale, metal chips, welding slag, welding rods, etc., can obstruct disc movement or damage the disc or seat.
2. The Bray elastomer seat has molded o-rings on the face of the seat. **As a result, no gaskets are required as these o-rings serve the function of a gasket.**
3. Align the piping and then spread the pipe flanges a distance apart so as to permit the valve body to be easily dropped between the flanges without contacting the pipe flanges ***(see figure 1 page 6).***
4. Check to see that the valve disc has been positioned to a partially open position, with the disc edge about 1/2 inch to 3/8 inch inside the face of the seat, (approximately 10° open) ***(see figure 1 page 6)*** **Note: See page 2 for special consideration for valves with spring return actuators.**
5. Insert the valve between the flanges as shown in figure 1 of page 6, taking care not to damage the seat faces. Always pick the valve up by the locating holes or by using a nylon sling on the neck of the body.

WARNING

Never pick up the valve by the actuator or operator mounted on top of the valve.

Figure 1 – Insert Resilient Seated Butterfly Valve Between Flanges

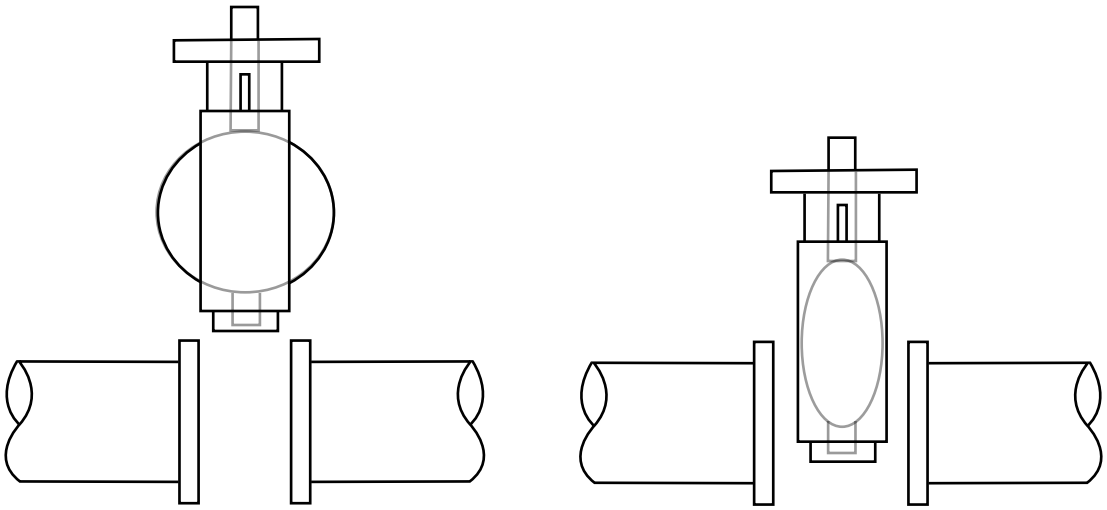

INCORRECT INSTALLATION | **CORRECT INSTALLATION**

CAUTION

Pipe not spread, disc opened beyond valve body face; Results; Disc edge damaged when it hits pipe flange.

Pipe spread and aligned, disc rotated; Results; no undesirable beginning seating/ unseating torque, disc edge protected.

6. Place the valve between the flanges, center it, and then span the valve body with all flange bolts, but do not tighten the bolts. Carefully open the disc to the full open position, making sure the disc does not hit the adjacent pipe I.D. Now systematically remove jack bolts or other flange spreaders, and hand-tighten the flange bolts as shown in **Figure 2** below. Very slowly close the valve disc to ensure disc edge clearance from the adjacent pipe flange I.D. Now open the disc to full open and tighten all flange bolts per specification as shown in **Figure 2**. Finally, repeat a full close to full open rotation of the disc to ensure proper clearances ***(See figures 3 & 4 page 7)***.

Figure 2 – Flange Bolt Tightening Pattern

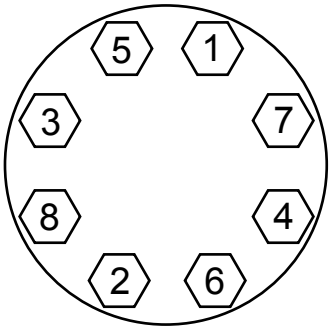

Figure 3 – Initial Centering & Flanging of Valve

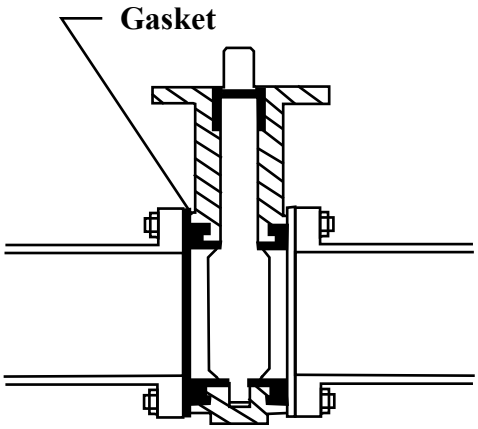

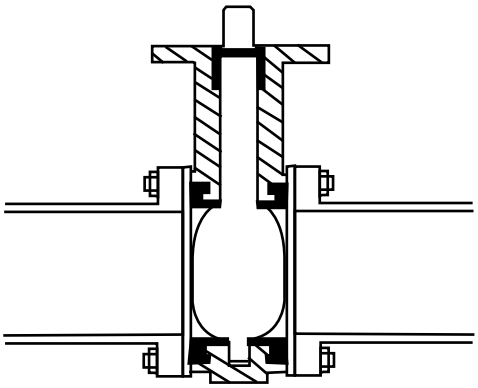

INCORRECT INSTALLATION

Disc in closed position; gaskets used; Results – Seat distorted and over-compressed causing high initial unseating torque problems.

CORRECT INSTALLATION

Bolts snugged, not torqued tight, disc edge within body face-to-face but not fully closed, no flange gaskets; Results: No disc edge damage, proper sealing allowed.

Figure 4 – Final Aligning & Tightening of Flange Bolts

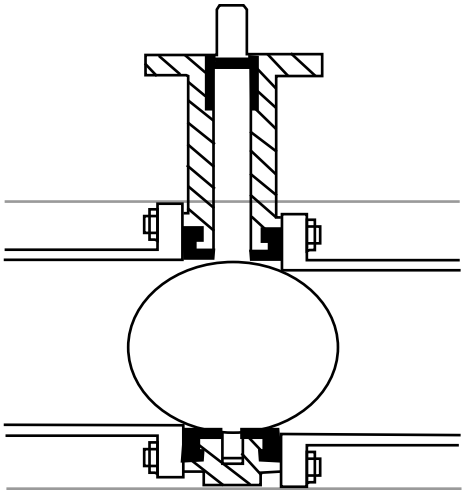

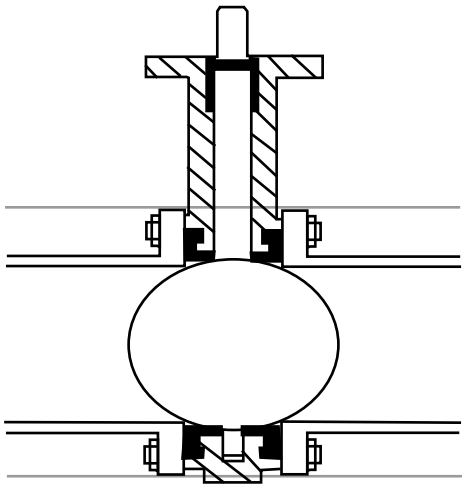

INCORRECT INSTALLATION

Piping misaligned; Results Disc O.D. strikes pipe I.D. causing disc edge damage, increased torque & leakage. Seat face o-rings will not seal properly with incorrectly aligned piping.

CORRECT INSTALLATION

Piping aligned properly when bolts tightened, disc in full open position; Results – disc clears adjacent pipe I.D., seat face seals properly, no excessive initial torque.

When resilient seated butterfly valves are to be installed between ASME welding type flanges, care should be taken to abide by the following procedure to ensure no damage will occur to the seat:

1. Place the valve between the flanges with the flange bores and valve body aligned properly. The disc should be in the 10° open position.
2. Span the body with the bolts.
3. Take this assembly of flange-body-flange and align it properly to the pipe.
4. Tack weld the flanges to the pipe.
5. When tack welding is complete, remove the bolts and the valve from the pipe flanges and complete the welding of the flanges. Be sure to let the pipe and flanges cool before installing the valve.

CAUTION

Never complete the welding process (after tacking) with the valve between pipe flanges. This causes severe seat damage due to heat transfer.

Installation of Bray PTFE Seated Butterfly Valves in Plastic Flanges.

Bray recommends the following guidelines when PTFE Seated Valves are installed between plastic flanges:

1. The valve body should be coated with epoxy, not nylon. The extra thickness of the nylon coating slightly reduces the seat compression, and every advantage to maximize seat compression should be taken with plastic flanges.
2. The plastic flange can be either one piece construction, or two piece construction comprised of a stub end and a backup ring.
3. The plastic flange style can be butt-weld, socket or slip-on, but butt-weld and socket are preferred.
4. The plastic flange face must be flat. Concave and convex flange faces are not acceptable. This includes flange faces that were originally flat but later distorted into a concave shape by over tightening the flange bolts.
5. The plastic flange face surface may have grooves or serrations, provided the grooves do not exceed .100” (2.54 mm) in width or .020” (.508 mm) in depth. If the grooves are less than .100” (2.54 mm) in width, the groove depth must not exceed the width. However, fine conentric or “phonograph record” grooves are acceptable regardless of the groove depth.
6. Flange gaskets must not be used with PTFE seats, since they create an uncontrolled over compression that can buckle the PTFE and damage the seat. If a damaged face, a flange gasket can appear to cure the leak to atmosphere, while simultaneously damaging the PTFE seat and creating a second leak across the disc or up the stem hole. Leaks across the plastic flange must be cured without the use of gaskets, by proper selection and installation of the flange.
7. The bolts holding plastic flanges should be installed in strict conformance to the recommended practices of the plastic flange manufacturer. This usually involves aligning the flanges accurately, using lubricated bolts, and tightening the bolts in the proper sequence and to the specified torque. Uniform stress across the flange prevents leakage.

Maintenance and Repair

The many Bray features minimize wear and maintenance requirements. No routine lubrication is required. **All components – stem, disc, seat, bushing, stem seal, etc., are field replaceable, no adjustment is required**. If components require replacement, the valve may be removed from the line by placing the disc in the near closed position, then supporting the valve and removing the flange bolts.

WARNING No valve maintenance, including removal of manual or power actuators, should be performed until the piping system is completely depressurized.

Appendix C

Disassembly/Assembly Instructions

Series 30/31 Resilient Seated Butterfly Valves

Disassembly –

1. Remove the handle, gear operator, or power actuator from actuator mounting flange.
2. Remove the "Spirolox"® retaining ring and the two C-ring stem retainers from the stem hole.
3. Then remove the stem, bushing and seal.
4. Remove the disc from the seat, protecting the disc edge at all times.
5. Push the seat into an oval shape, and then remove the seat from the body.

Assembly –

1. Push the valve seat into an oval and push it into the body with seat stem holes aligned to body stem holes.

NOTICE	When installing the seat the larger hole should be on top and the smaller hole should be on bottom.

2. Insert stem seal and bushing.
3. Push stem into the stem hole of the body until the bottom of the stem is flush with the inner top edge of the seat.
4. Install a light coating of silicone or grease on the I.D. of seat. Insert the disc into the seat by lining up the disc holes with the stem holes of the seat.

   Note: The broached double "D" flats in the disc must be toward the bottom of the valve body.

5. With a downward pressure and rotating the stem back and forth, push the stem until the stem touches the bottom of the body stem hole.
6. Make certain that when pushing the stem through the disc bottom, the broached flats of stem and disc are aligned.
7. Replace the stem bushing and two stem retainers, then replace the "Spirolox"® retaining ring back into position.
8. Replace handle, manual gear operator or power actuator on the actuator mounting flange.

SERIES 30/31

RESILIENT SEATED BUTTERFLY VALVES

1 BODY (S30 WAFER STYLE SHOWN)
2 SEAT
3 DISC
4 STEM
5 STEM SEAL
6 STEM BUSHING
7 STEM RETAINER
8 THRUST WASHER
9 RETAINING RING

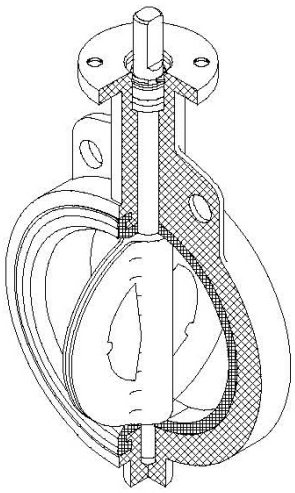

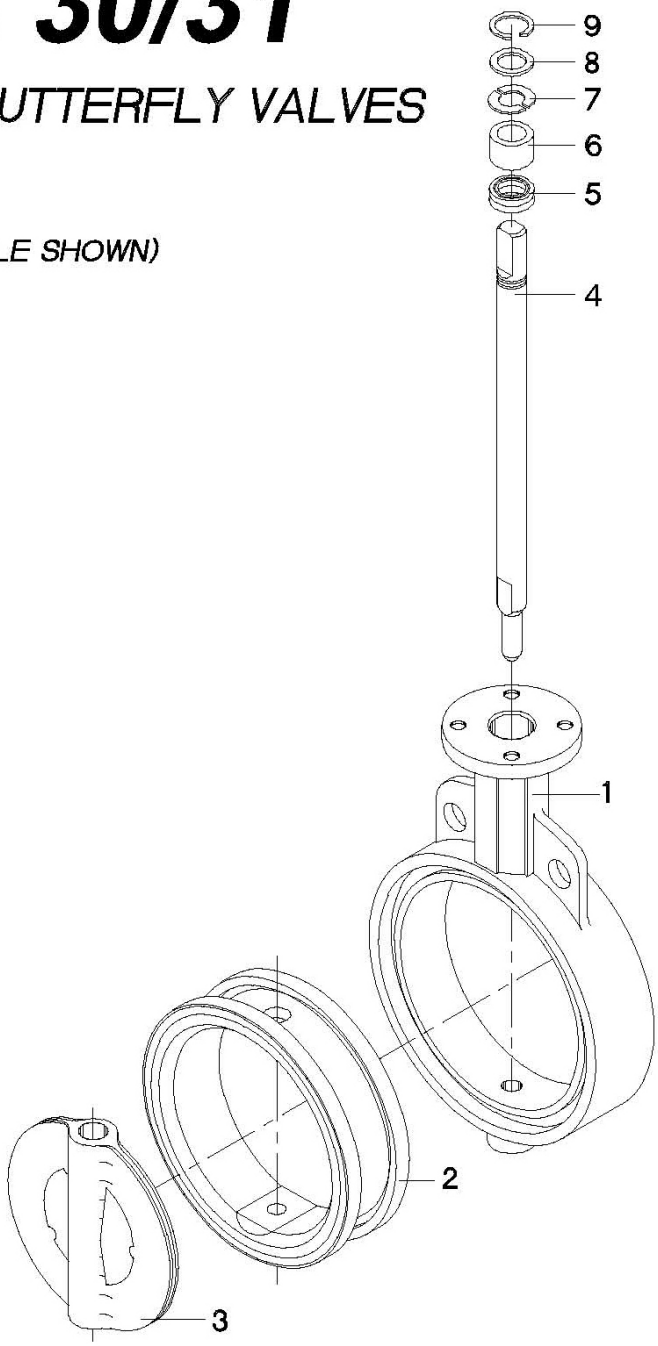

STAINLESS STEEL BALL VALVE INFORMATION

Series 50

Flanged Full Port Ball Valve

SHARPE®

Valves, Automation & Controls

Features

- Full port
- Class 150
- Locking device
- Blow-out proof stem
- NACE MR-0175
- ISO 5211 mounting pad
- Wall thickness ASME B16.34
- Face to face dimensions ASME B16.10
- Flange dimensions ASME B16.5
- Pressure test B16.34 (Optional API 598)

Toll Free (877) 774-2773 | Local (708) 562-9221 | Fax (708) 562-0890 | www.sharpevalves.com

Dimensions

1/2" - 2"

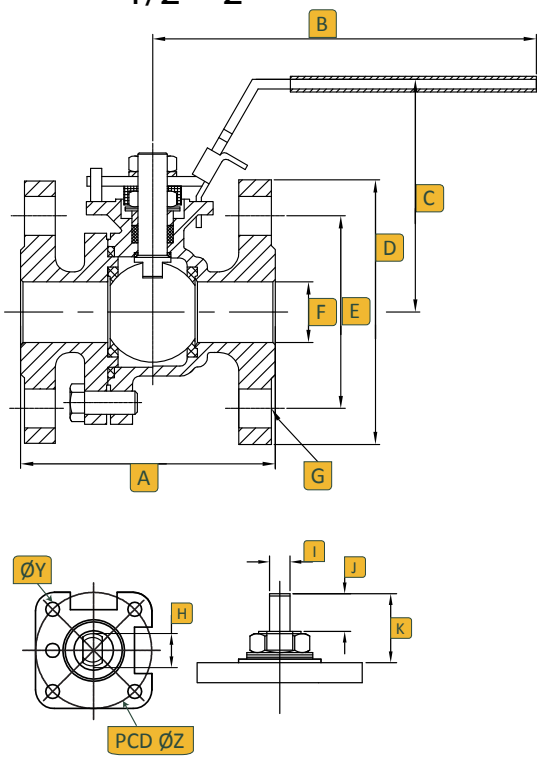

2-1/2" - 4"

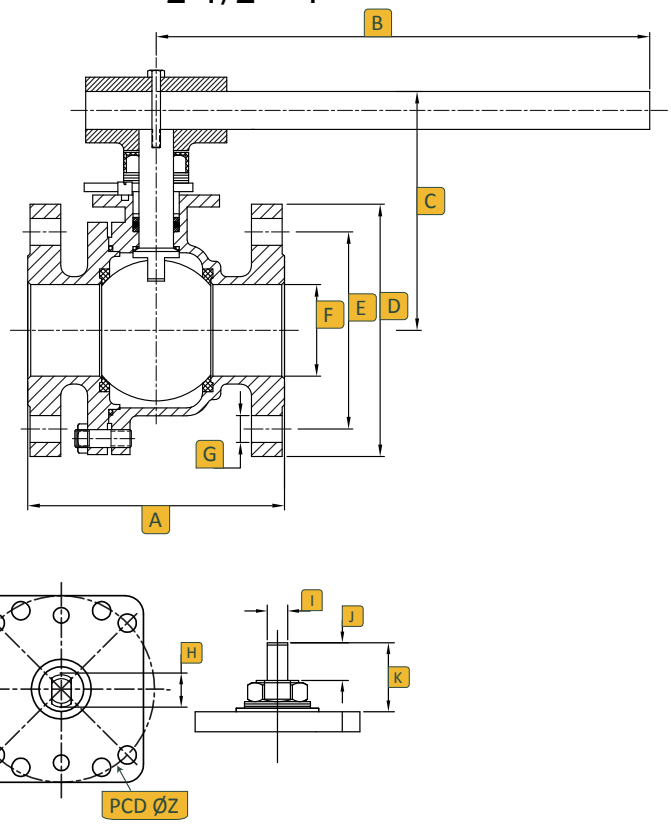

6" & 8"

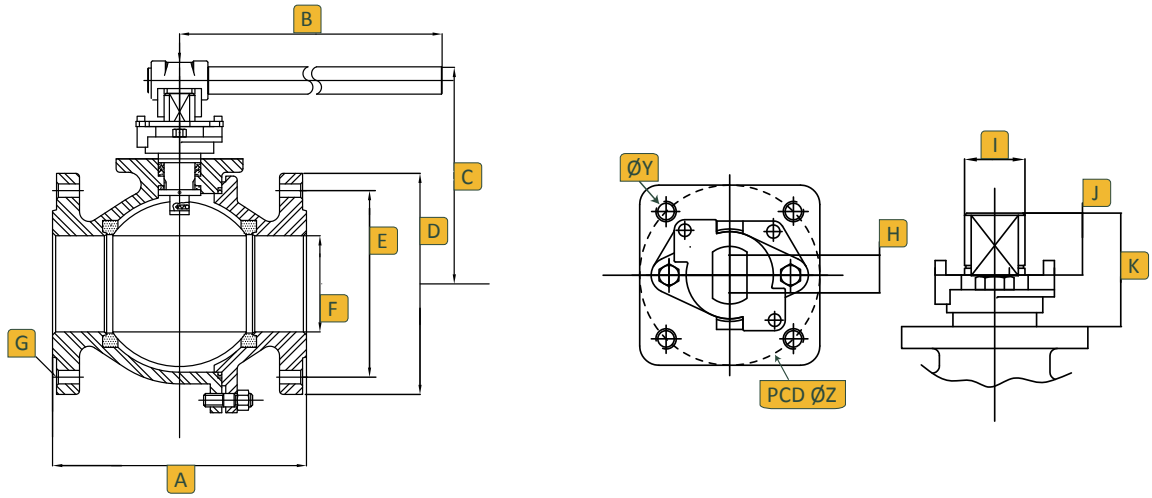

Size	A	B	C	D	E	F	G	H	I	J	K	ØY	ØZ
1/2	4.25	4.75	3.60	3.50	2.38	0.59	4-0.630	3/8-24 UNF	0.22	0.39	0.73	M6	1.969
3/4	4.62	4.75	3.75	3.88	2.75	0.787	4-0.630	3/8-24 UNF	0.22	0.34	0.70	M6	1.969
1	5.00	6.22	3.75	4.25	3.12	0.984	4-0.630	7/16-20 UNF	0.30	0.60	0.85	M6	1.969
1-1/2	6.50	9.00	4.50	5.00	3.88	1.496	4-0.630	9/16-18 UNF	0.35	0.68	1.18	M8	2.756
2	7.00	9.00	4.80	6.00	4.75	1.969	4-0.748	9/16-18 UNF	0.35	0.65	1.18	M8	2.756
2-1/2	7.48	13.74	6.70	7.01	5.50	2.56	4-0.750	1-14 UNS	0.75	0.66	1.87	M10	4.02
3	7.99	13.74	7.00	7.48	6.00	3.15	4-0.750	1-14 UNS	0.75	0.69	1.87	M10	4.02
4	8.98	13.74	7.70	9.02	7.50	3.94	4-0.750	1-14 UNS	0.75	0.69	1.91	M10	4.02
6	15.50	25.59	10.50	10.98	8.50	6.00	8-0.875	1.72	1.02	1.46	3.58	M12	4.92
8	18.00	55.12	13.38	13.50	10.63	8.00	8-0.875	1.72	1.02	1.46	3.58	M12	4.92

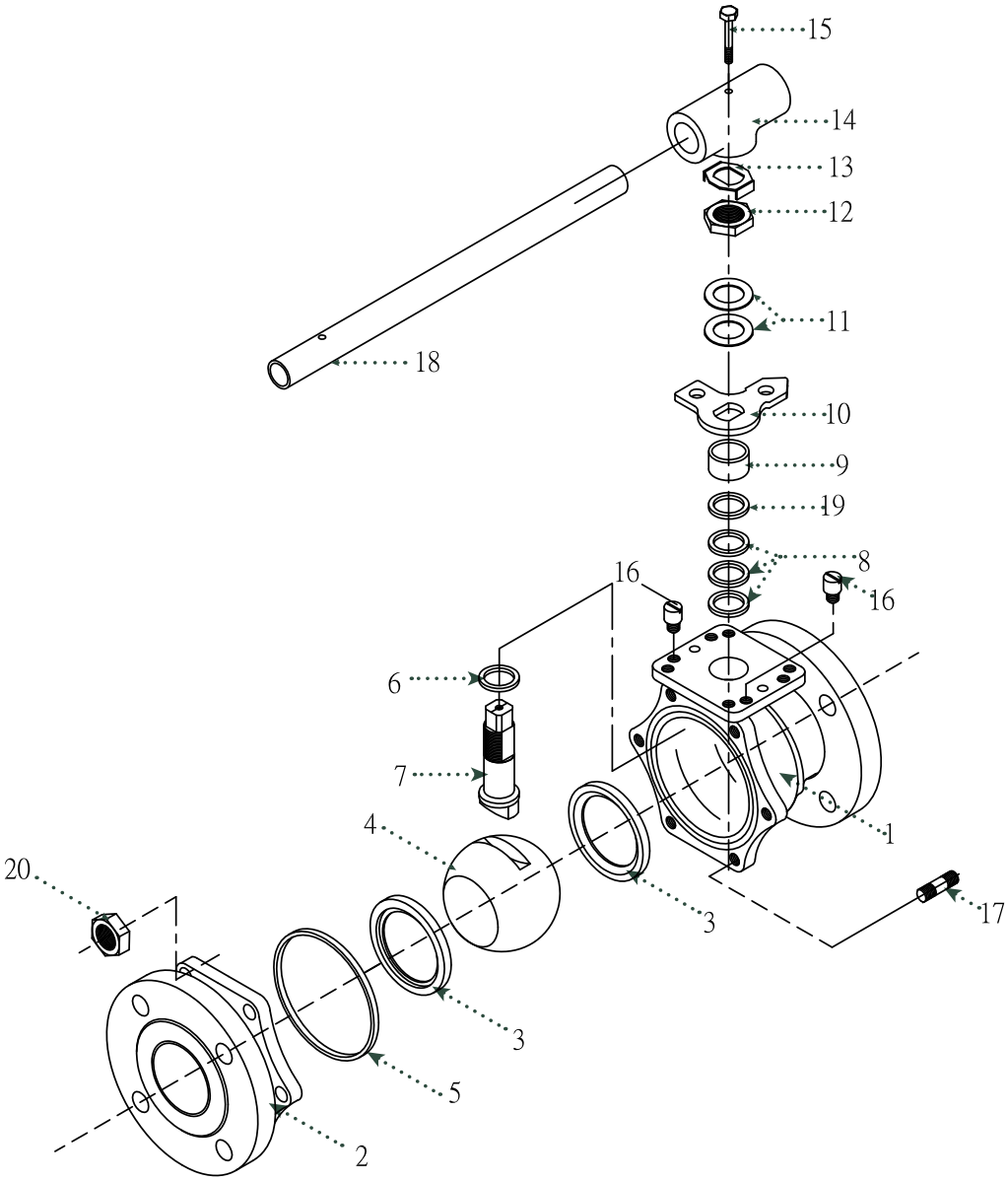

No.	Part Name	Qty	Material
1	Body	1	316 Stainless Steel, ASTM A351 or Carbon Steel, ASTM A216 WCB
2	Body Ends	1	316 Stainless Steel, ASTM A351 or Carbon Steel, ASTM A216 WCB
3	Seat	2	PTFE, RTFE, or TFM
4	Ball	1	316 Stainless Steel
5	Body Seal	1	RTFE, PTFE or MG1241
6	Thrust Washer	1	RTFE, PTFE or MG1241
7	Stem	1	316 Stainless Steel
8	Stem Seal	2	RTFE, PTFE or MG1241
9	Gland	1	304 Stainless Steel
10	Stopper	1	304 Stainless Steel
11	Belleville Washer	2	301 Stainless Steel
12	Packing Nut	1	304 Stainless Steel
13	Lock Tab	1	304 Stainless Steel
14	Wrench Block	1	304 Stainless Steel
15	Hex Head Bolt	1	304 Stainless Steel
16	Stop Pin	2	304 Stainless Steel
17	Body Bolts	6/8	304 Stainless Steel
18	Handle	1	304 Stainless Steel
19	Flat Washer	1	304 Stainless Steel
20	Body Bolts	6/8	304 Stainless Steel

Technical Information

Size	CV	Port	Weight LB
1/2	26	0.59	4
3/4	50	0.78	6
1	94	1.00	8
1-1/2	260	1.50	15
2	480	2.00	20
2-1/2	750	2.55	36
3	1300	3.00	45
4	2300	4.00	75
6	5400	6.00	135
8	10000	7.88	290

Class 150 Temperature / Pressure Rating

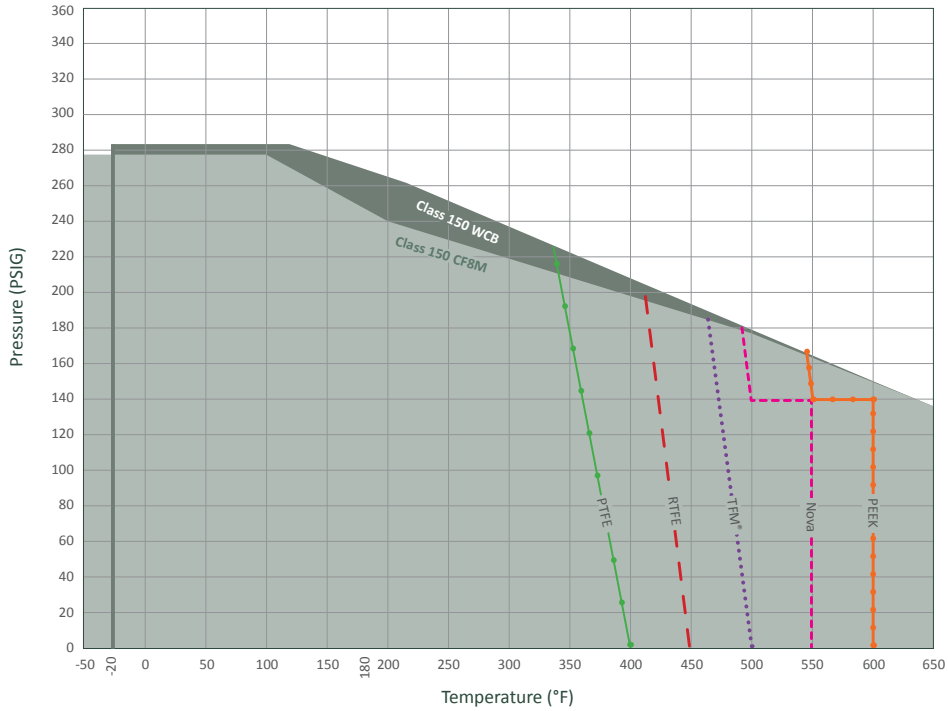

Ordering

Fig: 1/2 - 50 - 11 - 6 - N
Description: 1/2" - 5011 - 316 Body - Nova Seat

Size	Series	Class		Body		Seat		Options	
1/2	50	11	150#	2	Alloy 20	R	RTFE	X	Oxygen Service
3/4				3	Monel	N	Nova	OH	Oval Handle
1				4	Carbon Steel	T	PTFE	F	Fugitive Emissions, Certified ANSI 593.00.01
1-1/2				5	Hastelloy C	P	PEEK	E	Extended Stem
2				6	Stainless Steel	M	TFM	L	Lockable Extended Stem
2-1/2								D	Leak Detection Stem
3								GO	Gear Operator
4								7	17-4PH Stem
6								A	Nace
8									

Due to continuous development of our product range, we reserve the right to change the dimensions and information for this product as required.

RUPTURE DISK INFORMATION

MONO Type

the best choice for low and intermediate burst ratings

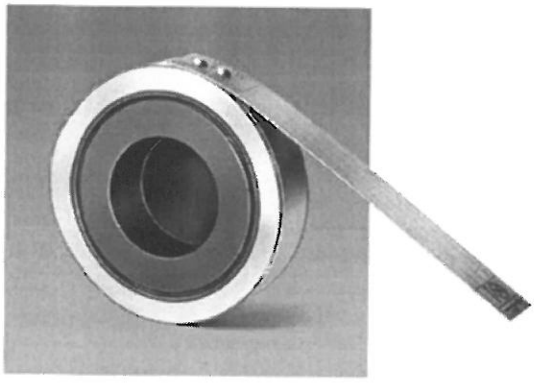

- Sizes 1/2" thru 24" diameters
- Designed to fit ASME B16.5 Class 150 flanges (Higher ratings to fit Class 300 flanges are furnished in the INVERTED and DUPLEX Type Disks)
- Burst ratings 0.25 to 150 psig
- 0% manufacturing range
- Operating pressures to 90% of the disk's marked burst pressure (Contact ZOOK for operating ratio for burst pressures below 40 psig)
- Temperature ratings –290°F to +700°F (–179°C to +371°C). Maximum temperature rating without insulation is 430°F (221°C) or 700°F (371°C) with insulation. Contact ZOOK for higher temperature ratings. The specified temperature shall be at the disk location at the time when the disk is expected to rupture
- Counterbored side of the disk contacts the process media
- Vacuum supports are available for ratings below 25 psig
- May be configured to withstand high back pressure generated in closed piping systems – request Bak-Pressure™ bulletin
- Stocked MONO Disks, ready for immediate shipment
  Sizes: 1", 1-1/2", 2", 3", 4", 6", 8" to fit ASME B16.5 Class 150 flanges
  Burst Ratings: 10, 15, 20, 25, 30, 40, 50, 75, 100, 125, 150 psig @ 72°F (22°C)

Note: Sizes 6" and 8" with burst ratings 125 and 150 psig @ 72°F (22°C) are stocked in INVERTED type

- ASME UD marking available

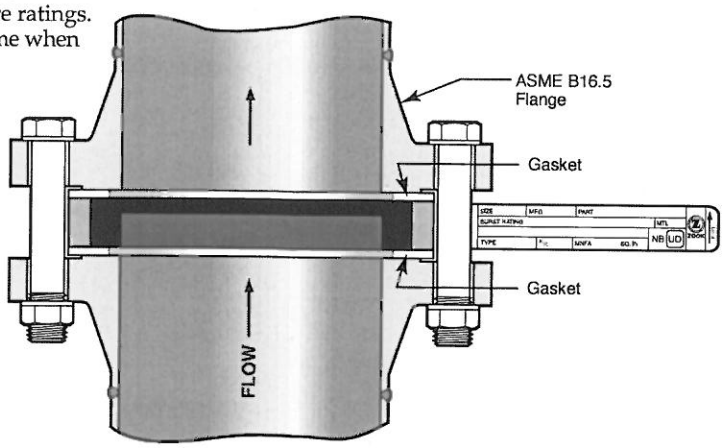

Certified Flow Resistance Factor (K_{rgl})

Support Style	K_{rgl}
MONO – no support	0.26
MONO – with bar	2.40
MONO – with cross	5.40
MONO – with ring	6.44
MONO – with plate	15.70

Required Vacuum Support Style for Full Vacuum Service

Size	Burst Rating	Support Style
1"	below 25 psig	MONO – with ring
1-1/2"	below 25 psig	MONO – with bar
2" - 14"	9 to 25 psig	MONO – with bar
2" - 14"	5 to below 9 psig	MONO – with cross
2" - 14"	below 5 psig	MONO – with plate

Contact ZOOK for sizes 16" and larger

Specifications – ASME B16.5 Class 150

Nominal Disk Sizes	Minimum net flow area (MNFA) Sq. inches					Disk Dimensions				Burst Ratings psig	
	Full Bore	Vacuum support style				Diameter		Thickness*			
		Ring	Bar	Cross	Plate	I.D.	O.D.	Standard Disk	Insulated Unit	Min.	Max.
1/2"	0.30	N/A	N/A	N/A	N/A	0.622"	1-3/4"	5/8"	1-3/4"	25	150
3/4"	0.53	N/A	N/A	N/A	N/A	0.824"	2-1/8"	5/8"	1-3/4"	25	150
1"	0.78	0.44	0.60	0.47	0.32	1"	2-1/2"	7/8"	2-1/4"	10	150
1-1/2"	1.76	N/A	1.34	1.05	0.72	1-1/2"	3-1/4"	7/8"	2-1/4"	7	150
2"	3.14	N/A	2.39	1.86	1.30	2"	4"	7/8"	2-1/4"	3	150
3"	7.06	N/A	5.56	4.31	2.95	3"	5-1/4"	7/8"	2-1/4"	2	150
4"	12.56	N/A	10.56	8.81	5.47	4"	6-3/4"	7/8"	2-1/4"	1.5	150
6"	28.27	N/A	22.27	17.27	12.05	6"	8-5/8"	7/8"	2-1/4"	1	100
8"	50.02	N/A	40.26	31.82	21.14	8"	10-7/8"	1-1/8"	2-3/4"	0.50	100
10"	78.53	N/A	63.53	50.78	32.66	10"	13-1/4"	1-1/2"	3-3/8"	0.25	100
12"	113.09	N/A	89.09	69.09	47.24	12"	16"	2"	4-3/8"	0.25	75
14"	137.88	N/A	108.06	83.31	58.07	13-1/4"	17-5/8"	2-1/4"	4-7/8"	0.25	50
16"	182.65	N/A	144.52	112.65	84.49	15-1/4"	20-1/8"	2-1/2"	5-3/8"	0.25	50
18"	233.70	N/A	181.95	153.70	104.31	17-1/4"	21-1/2"	2-3/4"	5-7/8"	0.25	50
20"	291.03	N/A	233.28	184.53	122.49	19-1/4"	23-3/4"	3"	6-3/8"	0.25	40
24"	424.55	N/A	354.80	294.05	190.61	23-1/4"	28-1/8"	3"	6-3/8"	0.25	25

125

*Standard disk thickness does not include gaskets.
Insulated unit thickness includes all gaskets

Note: Maximum pressure rating of ASME B16.5 Class 150 flanges is 290 psig @ 100°F (38°C).
The maximum pressure rating is lower at higher temperatures.
Reference ASME/ANSI B16.5

AIR RELEASE VALVE INFORMATION

Pressure Air Release Valves

Dimensions and Weights

MODEL	INLET NPT	TRIM	HEIGHT	WIDTH	WEIGHT (lbs)
PL10	1" NPT	S/S	9 1/8"	9 3/4"	22
PL10A	2" NPT	S/S	9 1/8"	9 3/4"	22
PL20	2" NPT	S/S	10 1/2"	10 1/8"	45
PL20A	3" NPT	S/S	12 1/4"	10 1/8"	54
PL21	2" 125# Flg.	S/S	14"	10 1/8"	51
PL22	2" 250# Flg.	S/S	14 1/4"	10 1/8"	56
P250	2 1/2" NPT	IBBT	11 1/8"	11 1/2"	58
P251	2 1/2" 125# Flg.	IBBT	14 1/8"	11 1/2"	68
P252	2 1/2" 250# Flg.	IBBT	14 5/16"	11 1/2"	70
P30	3" NPT	IBBT	13 1/2"	12 1/2"	87
P31	3" 125# Flg.	IBBT	16 3/16"	12 1/2"	100
P32	3" 250# Flg.	IBBT	16 9/16"	12 1/2"	103
P40	4" NPT	IBBT	16 5/8"	4 1/4"	132
P41	4" 125# Flg.	IBBT	18 7/8"	14 1/4"	145
P42	4" 250# Flg.	IBBT	19 3/16"	14 1/4"	158

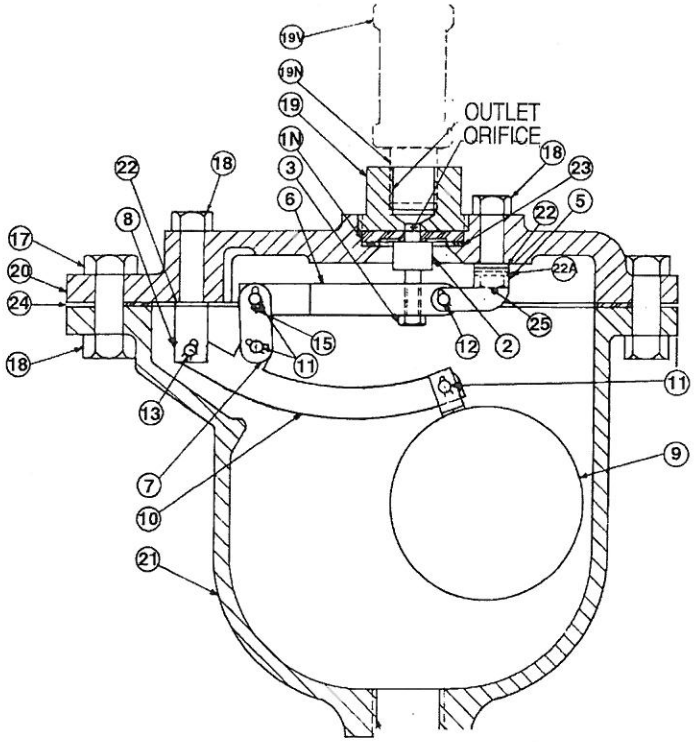

CRISPIN Pressure Air Release Valves operate by means of a compound lever system. This lever system multiplies the weight of the float so that the force pulling the rubber valve away from the orifice is greater than the force or system pressure holding it closed. The pressure at which it will operate is determined by the orifice size. The orifice size will vary inversely to the pressure, that is, as the operating pressure increases the orifice must be smaller, as the operating pressure decreases the orifice can be larger. A valve with an orifice size small enough to permit operation at 300 psig will still function at pressures less than 300 PSIG.

Where pressure air release valves are used on systems other than water, the specific gravity of the liquid must be considered (re. catalog sheet: "Air Release Valves For Liquids Other Than Water"). The specific gravity affects the float buoyancy and, subsequently, valve performance. For example, a valve applied on a petroleum application would require a float of lighter weight in order to provide a buoyancy equivalent to that of the float in water.

Pressure Air Release Valves

PL SERIES

Pressure Air Release Valve Parts Lists:

1" and 2" Valves

PART NO.	ITEM	MATERIAL
1N*	SEAT	PVC
1P*	SEAT	Stainless Steel
2	VALVE	BUNA-N Rubber
3	PLUNGER NUT	Stainless Steel
5	VALVE FULCRUM	Stainless Steel
6	VALVE LEVER	Stainless Steel
7	LINK	Stainless Steel
8	BALL FULCRUM	Stainless Steel
9	BALL FLOAT	Stainless Steel
10	BALL LEVER	Stainless Steel
11	BEARING PIN	Stainless Steel
12	BEARING PIN	Stainless Steel
13	BEARING PIN	Stainless Steel
15	PIN CLIP	Stainless Steel
17	BOLT	Steel
18	NUT	Steel
19	TOP	Cast Iron
19N**	NIPPLE	Steel
~~19V**~~	~~VACUUM CHECK~~	~~Brass~~
20	FLANGE	Cast Iron
21**	BODY	Cast Iron
21F**	BODY-125* ANSI Flanged	Cast Iron
~~21FH**~~	~~BODY-250*~~ ANSI Flanged	~~Cast Iron~~
22	FULCRUM WASHER	Fiber
22A	FULCRUM WASHER	Fibre
23	SEAT GASKET	Fibre
24	FLANGE GASKET	Armstrong
25	BOLT	Stainless Steel
26	NUT	Stainless Steel

2 1/2", 3" and 4" Valves

PART NO.	ITEM	MATERIAL
1N*	SEAT	PVC
1P*	SEAT	Stainless Steel
2	VALVE	BUNA-N Rubber
3	PLUNGER NUT	Brass
4	PLUNGER	Brass
5	VALVE FULCRUM	Stainless Steel
6	VALVE LEVER	Stainless Steel
7	LINK	Stainless Steel
8	BALL FULCRUM	Stainless Steel
9	BALL FLOAT	Stainless Steel
10	BALL LEVER	Stainless Steel
11	BEARING PIN	Brass
12	BEARING PIN	Brass
13	SCREW	Stainless Steel
14	NUT	Steel
15	PIN CLIP	Stainless Steel
16	SCREW	Stainless Steel
17	BOLT	Steel
18	NUT	Steel
19	TOP	Cast Iron
19N**	NIPPLE	Steel
19V**	VACUUM CHECK	Brass
20	FLANGE	Cast Iron
21**	BODY	Cast Iron
21F**	BODY-125* ANSI FLANGED	Cast Iron
21FH**	BODY-250* ANSI FLANGED	Cast Iron
22	FULCRUM WASHER	Fibre
23	SEAT GASKET	BUNA-N
24	FLANGE GASKET	Armstrong

* Part No. 1P is interchangeable with Part No. 1N and is optional at customer's request
** Part No.'s 19N, 19V, 21, 21F & 21FH are at customer's option

PL Crispin Valve, 600 Fowler Ave., Berwick, PA 18603 • 1-800-AIR-VALV • T: (570) 752-4524 • F: (570) 752-4962 • WWW.CRISPINVALVE.COM • sales@crispinvalve.com

Submittal Sheet for Crispin PL Series

1"–2" Pressure Air Release Valve

Manufactured in compliance with ANSI/AWWA C512 **Date: October, 2001**

Specifications

The Pressure Air Release Valve(s) shall be installed at high points selected by the engineer to vent the accumulation of air and other gases with the line under pressure.

The valve(s) shall operate through a compound lever system and shall have a 5/16 " orifice with valve sealing faces of an adjustable Buna-N rubber valve and stainless steel or PVC. It shall operate at 150 PSIG, and be capable of passing 152 scfm. of air.

The valve(s) shall be _____ " ~~NPT screwed or~~ ANSI Class (125, 250) flanged inlet connection and shall have a cast iron body, top and inlet flange (where required), a stainless steel float and trim. Valves which use a needle to seal the orifice will not be acceptable.

The valve(s) shall be Crispin Model PL 21 Pressure Air Valve(s), Type N (PVC seat and Buna-N rubber valve) or or Type P (stainless steel seat and Buna-N rubber valve) as manufactured by Crispin-Multiplex Manufacturing Co., Berwick, PA.

~~Option:~~ A Vacuum Check Valve shall be supplied on the outlet to eliminate the possibility of air entering the system where the pressure decreases, or if a vacuum is drawn.

~~Option:~~ Where pressures are greater than 300 PSIG, the valve(s) shall be ANSI Class _____ flanged inlet connection and shall have a (steel, stainless steel, or ductile iron) body, top and inlet flange.

Standard operating pressure for Crispin Air Valves is 20 to 150 PSIG. Please check one of the following if your operating needs differ:

____ 2 to 40 PSIG ____ 151 to 300 PSIG

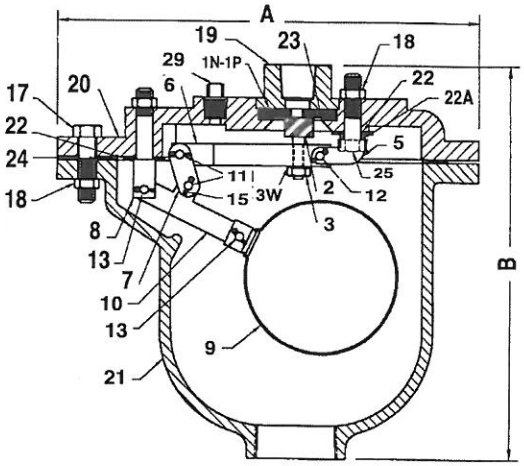

Pressure Air Valve Parts List

ITEM	DESCRIPTION	MATERIAL	ASTM
*1N	SEAT	PVC	1784
*1P	SEAT	STAINLESS STEEL	A240
2	VALVE PLUNGER	BUNA–N RUBBER & S/S	D2000
3	PLUNGER NUT	STAINLESS STEEL	A194
3W	LOCK WASHER	STAINLESS STEEL	A240
5	VALVE FULCRUM	STAINLESS STEEL	A240
6	VALVE LEVER	STAI N LESS STEEL	A240
7	LINK	STAINLESS STEEL	A240
8	BALL FULCRUM	STAINLESS STEEL	A582
9	BALL FLOAT	STAINLESS STEEL	A240
10	BALL LEVER	STAINLESS STEEL	A240
11	BEARING PIN	STAINLESS STEEL	A582
12	BEARING PIN	STAINLESS STEEL	A582
13	BEARING PIN	STAINLESS STEEL	A582
15	COTTER PIN	STAINLESS STEEL	A313
17	BOLT	STEEL	A307
18	NUT	STEEL	A563
19	TOP	CAST IRON	A126 CL.B
20	FLANGE	CAST IRON	A126 CL.B
21	BODY	CAST IRON	A126 CL.B
22	FULCRUM WASHER	FIBER	N/A
22A	FULCRUM WASHER	FIBER	N/A
23	SEAT GASKET	BUNA–N RUBBER	D2000
24	FLANGE GASKET	ARMSTRONG N–8092	N/A
25	BOLT	STAINLESS STEEL	A193
29	PLUG	BRASS	B505

* Parts are interchangable and optional at customer's request

Size Specifications

MODEL	INLET SIZE	OUTLET SIZE	A	B	WT.
PL10	1" NPT	1/2" NPT	9.75	9.00	22
PL10A	2" NPT	1/2" NPT	9.75	9.00	23
PL20	2" NPT	1/2" NPT	10.25	10.50	45
†PL20A	3" NPT	1/2" NPT	10.13	12.25	54
**PL21	2" 125# FLG	1/2" NPT	10.25	14.00	51
**PL22	2" 250# FLG	1/2" NPT	10.25	14.25	53

† Indicates 3" valve with 3"inlet

** Includes ANSI CL. 125 or 250 companion FLG & NPL

PL10 & PL10A Orifice Options

DIAMETER	MAX. PRESSURE	DISCHARGE RATE
5/16	100 PSIG	105 SCFM
1/4	150 PSIG	98 SCFM
3/16	200 PSIG	72 SCFM
5/32	250 PSIG	61.1 SCFM
1/8	300 PSIG	46.7 SCFM

PL20 & PL20A Orifice Options

DIAMETER	MAX. PRESSURE	DISCHARGE RATE
3/8	100 PSIG	152 SCFM
5/16	150 PSIG	152 SCFM
1/4	200 PSIG	127 SCFM
3/16	250 PSIG	88 SCFM
5/32	300 PSIG	73 SCFM

SUBMITTAL SHEET FOR PL SERIES

Crispin Valve, 600 Fowler Ave., Berwick, PA 18603 • 1-800-AIR-VALV • T: (570) 752-4524 • F: (570) 752-4962 • WWW.CRISPINVALVE.COM • sales@crispinvalve.com

Crispin Pressure Air Release Valves

OPERATION

The CRISPIN Pressure Air Release Valve allows air to be released from a system while the system is in operation and under pressure. This is accomplished by the mechanics of the simple or compound lever system inside the valve.

The buoyancy of the float raises the linkage to seal the orifice as the valve body fills upon start-up. As accumulating air displaces the liquid in the valve body, the water level drops. The weight of the float multiplied by the lever system begins to pull the resilient seal away from the seat. This releases a quantity of air that allows more liquid to enter the valve body and, in turn, raises the float to again seat the orifice. The valve will continue to function in this fashion as long as air accumulates.

MAINTENANCE

The valve should be inspected periodically for leakage, particularly at the seat area.

SEAT REPLACEMENT

Isolate or remove the valve from the system. Remove the top (Part No. 1S) which secures the seat (Part No. lN-PVC Seat or Part No. lP- stainless steel seat) in place. Mark the location of the top in relation to the top flange (Part No. 20). With the proper size wrench, turn the top counter-clockwise.

Once the top is removed, the seat will be exposed. Remove the seat and the seat gasket (Part No. 23) and make the required replacement.

It is always best to coat the threads of the top with a suitable thread sealer prior to reassembling the valve. Turn the top into the flange thread (Part No. 20) until it is snug and as close as possible to the original mark. Tighten the top one-quarter turn.

INTERNAL REPAIRS:

The top flange (Part No. 20) must be removed for internal repair. Simply remove the flange nuts and bolts after isolating the valve from the system.

REPLACING VALVE PLUNGER

The valve plunger (Part No. 2–Buna-N Rubber) should be replaced when it begins to deteriorate because of age (4 to 5 years).

The linkage is easily disassembled by removing the pin clips from the bearing pins, then removing the bearing pins.

Now replace the valve plunger (Valve and Lever Assembly Part No. 6) and reconnect the bearing pins and clips.

Crispin Pressure Air Release Valves (continued)

ADJUSTING THE VALVE

The valve plunger is adjusted by removing the top flange, then turning the flange upside down, exposing the lever mechanism. The float is extended away from the valve orifice in order to pull the plunger away from the orifice. A light dusting of powder is spread over the valve seat and the float is allowed to relax.

While extending the float again, observe the powder pattern on the rubber valve, and make appropriate adjustments to permit its full face contact with the valve seat. Secure the plunger by locking the nut or screw.

Replace the flange, being careful not to allow the linkage to toggle over, which would prevent its functioning. This is done by placing either the valve body over the linkage with the flange inverted and resting on a table, or by holding the linkage closed with a screwdriver while replacing the flange on the body. Secure the flange nuts and bolts.

INSTALLATION

The CRISPIN Pressure Air Valve shall be installed at the high points in the line and mounted vertically. The inlet of the valve should be at the same elevation or greater than the elevation at the top of the pipe, with the piping to the inlet on a continuous upward slope. Valves should be protected from freezing.

For more detailed information on valve sizing, etc., please refer to the CRISPIN Catalog and/or Technical Reference No. 5.

Troubleshooting

Seat Leakage

—If a low volume leak persists with the rubber valve against the orifice, then the rubber valve should be adjusted or replaced.

—Replace the rubber valve if the valve has been in operation longer than five years.

—Inspect the valve seating area for foreign particles that could be preventing the valve from seating.

—Internal pressure should be adequate to provide a drip tight seat.

—If problem continues, please consult the factory.

** These valves are intended for use on municipal waste water systems or approved industrial applications.*

UTILITY BALL VALVE INFORMATION

SHARPE® VALVES

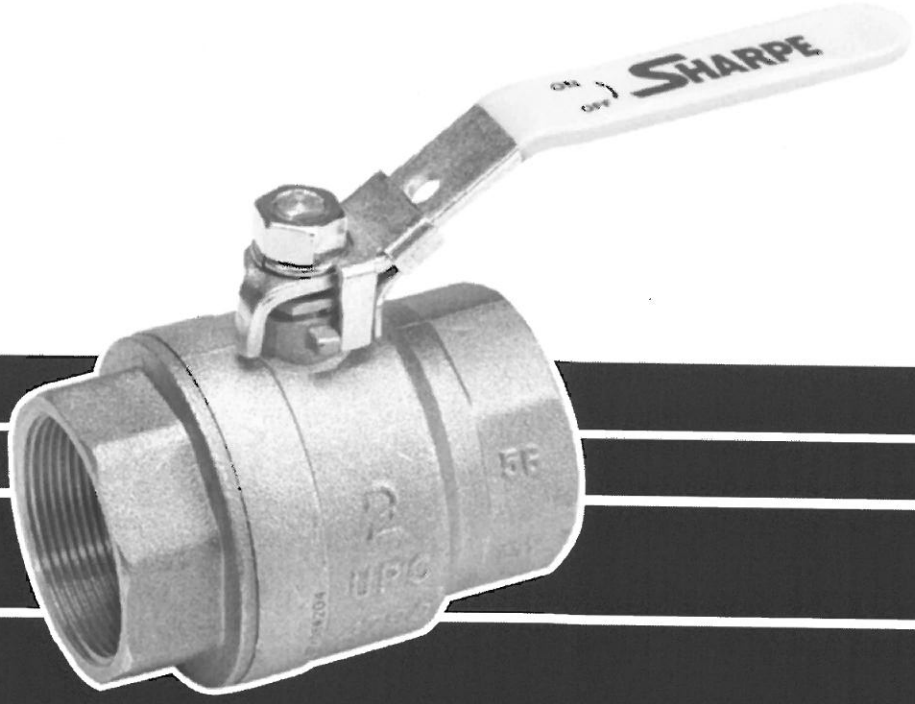

SERIES 10
BRASS FULL PORT
BALL VALVE

SERIES 10 BRASS FULL PORT BALL VALVE

1/4" - 4" 600 WOG
BLOWOUT PROOF STEM
LOCKING DEVICE HANDLES
OVAL HANDLES AVAILABLE

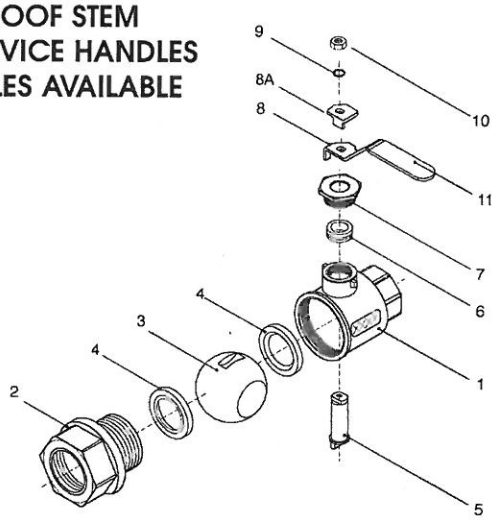

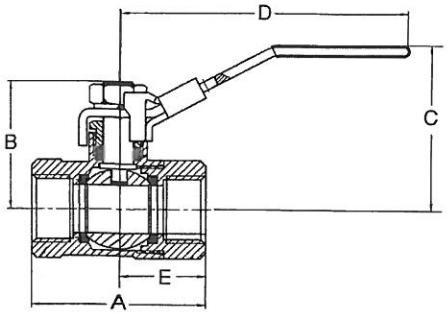

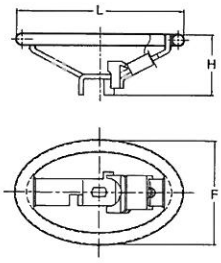

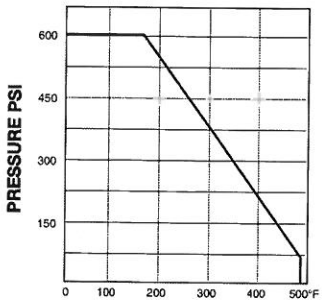

VALVE PARTS AND IDENTIFICATION

PART NO.	PART	QTY.	MATERIAL
1	Body	1	Forged Brass
2	Cap	1	Forged Brass
3	Ball	1	Chrome Plated Brass
4	Ball Seat	2	PTFE
5	Stem	1	Brass
6	Stem Packing	1	PTFE
7	Gland Packing	1	Brass
8	Handle	1	Galvanized Steel
8A	Locking Device	1	Galvanized Steel
9	Handle Washer	1	Steel
10	Handle Nut	1	Steel
11	Handle Sleeve	1	Plastic

*See Dimensions

DIMENSIONS

SIZE	A	B	C	D	E	L	F	H	PORT	WEIGHT
1/4"	1.70	1.38	1.85	3.46	0.85	3.62	2.30	1.34	0.39	0.33
3/8"	1.70	1.38	1.85	3.46	0.85	3.62	2.30	1.34	0.39	0.33
1/2"	2.10	1.58	1.99	3.46	1.05	3.62	2.30	1.34	0.59	0.52
3/4"	2.32	1.77	2.38	4.64	1.19	3.78	2.36	1.69	0.75	0.78
1"	2.90	2.00	2.54	4.64	1.45	3.78	2.36	1.69	1.00	1.10
1-1/4"	3.26	2.37	2.82	5.90	1.63	4.65	3.50	1.93	1.25	1.72
1-1/2"	3.63	2.75	3.03	5.90	1.81	4.65	3.50	1.93	1.50	2.28
2"	4.40	3.23	3.45	5.90	2.20	4.65	3.50	1.93	2.00	3.55
2-1/2"	6.00	3.94	4.59	9.05	3.00	-	-	-	2.50	7.50
3"	6.50	4.45	4.86	9.05	3.25	-	-	-	3.00	9.06
4"	7.76	5.32	5.66	10.00	3.88	-	-	-	4.00	16.30

HOW TO ORDER

VALVE SIZE	VALVE SERIES	BODY & END PLUG	BALL & STEM	SEAT	ENDS	OPTIONS
1/4" 1-1/2" 3/8" 2" 1/2" 2-1/2" 3/4" 3" 1" 4" 1-1/4"	10	1 = Brass	1 = Brass	T = Teflon	TE = Threaded	OH = Oval Handle

3/4" 10 1 1 T TE

SHARPE® VALVES
A Division of Smith-Cooper International, LLC

Toll Free: 1-877-7SHARPE
(877) 774-2773
Fax: (708) 562-9250
Email: info@sharpevalves.com
www.sharpevalves.com
1260 Garnet Drive
Northlake, Illinois 60164 U.S.A.

Due to continuous development of our product range we reserve the right to change the dimensions and information contained in the leaflet as required.
Teflon® is a registered trademark of E.I. DuPont.

Rev. 1/09

PRESSURE SWITCH INFORMATION

Series A1F Compact OEM Pressure Switch

Specifications - Installation and Operating Instructions

A1F

A1F with A-447

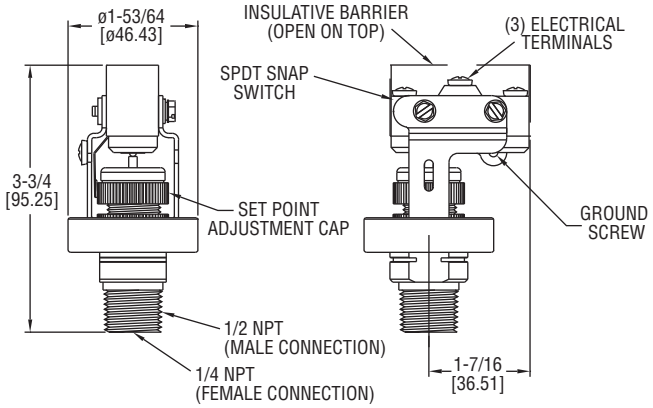

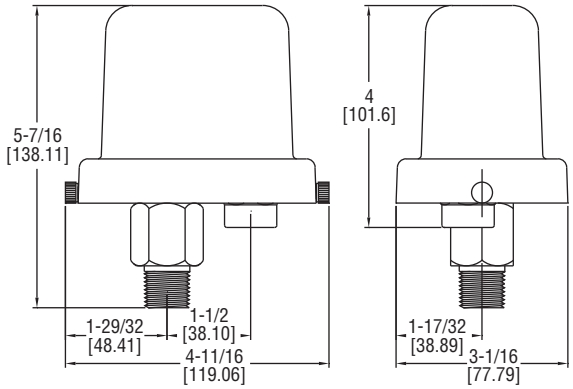

The Series A1F Compact OEM Pressure Switch is ideal for panel mounting wherever a high-quality, economical open-case or weatherproof control is required.

INSTALLATION

1. Location: Select a location where the temperature limits of -40 to 180°F (-40 to 82°C) will not be exceeded. Locate the switch as close as possible to the pressure source. Long lengths of piping will not affect accuracy of the actuation point but will slightly add to response time.

2. Mounting and Processing Connection: Avoid mounting surfaces with excess vibration which could cause false actuation when pressure is near setpoint. The switch should be mounted within 20° of vertical for proper operation. Mount the switch by connecting it to the process piping using either 1/4″ NPT female or 1/2″ male connection. Pipe joint compound or TFE thread tape should be used to prevent leakage.

3. Electrical Connections: The SPDT snap switch includes normally open, normally closed and common connections. The common and normally open contacts will close and the common and normally closed contacts will open when pressure increases to the setpoint. The actions will reverse when pressure decreases below the setpoint minus the deadband. A green grounding screw is provided on the switch bracket. All wiring should be in accordance with local codes.

SETPOINT ADJUSTMENT

1. Determine the setpoint pressure. The approximate actuation point can be set by turning the adjustment cap up or down, aligning the top of the O-ring, located above the cap, with the appropriate scale graduation.
2. Connect tubing or piping from the pressure port on bottom of switch to one leg of a tee. Connect the second leg to a pressure test gage of known accuracy and in an appropriate range. The third leg should be connected to a controllable source of pressure.
3. Connect a volt/ohm meter or other circuit tester to the snap action terminals to indicate when switching occurs.
4. Slowly apply pressure to the system and note the pressure at which switching occurs.
5. Operate the switch through several cycles to confirm proper actuation point.
6. Remove test apparatus and attach switch to pressure source and control circuit wiring. Place switch in service.

SPECIFICATIONS

Service: Compatible liquids and gases.
Wetted Materials:
- **Pressure Chamber:** 316 SS.
- **Diaphragm:** Fluorocarbon.

Temperature Limit: -40 to 175°F (-40 to 80°C).
Pressure Limits: 750 psig (51 bar).
Enclosure Rating: No rating for open construction. Installed properly within an optional A-447 enclosure meets NEMA 4X standards.
Switch Type: SPDT snap switch.
Electrical Rating: 15A @ 120/240/480 VAC, 1/8 HP @ 125 VAC, 1/4 HP @ 250 VAC.
Electrical Connection: Screw terminals.
Process Connection: 1/4″ female NPT and 1/2″ male NPT.
Mounting Orientation: Within 20° of vertical.
Set Point Adjustment: Knurled screw cap with indicating scale.
Deadband: Fixed, See deadband chart.
Weight: 10.5 oz (297 g).

DWYER INSTRUMENTS, INC.
P.O. BOX 373 • MICHIGAN CITY, INDIANA 46361, U.S.A.
Phone: 219/879-8000 www.dwyer-inst.com
Fax: 219/872-9057 e-mail: info@dwyer-inst.com

Example of how to order:

A1F	-	O	-	SS	-	1	-	4
1		2		3		4		5

1. Diaphragm Designation:
   F - Fluorocarbon
2. Enclosure Designation:
   O - Open Construction No Enclosure
3. Housing Material Designation:
   SS - 316SS
4. Switch Designation:
   1 - SPDT Snap Action Switch
5. Operating Pressure Range Designation:
   1 - 2 to 15 psig
   2 - 4 to 75 psig
   3 - 8 to 225 psig
   4 - 16 to 450 psig

Series A1F Deadband Chart-psig (bar)

Range	Deadband at Minimum Range	Deadband at Maximum Range
2 to 15 (0.14 to 1.03)	2 (0.14)	3 (0.21)
4 to 75 (0.28 to 5.17)	4 (0.27)	15 (1.0)
8 to 225 (0.55 to 15.5)	8 (0.55)	25 (1.7)
16 to 450 (1.1 to 31.0)	15 (1.0)	50 (3.5)

MAINTENANCE

Upon final installation of the Series A1F Compact OEM Pressure Switch, no routine maintenance is required. A periodic check of the system calibration is recommended. The Series A1F is not field serviceable and should be returned if repair is needed (field repair should not be attempted and may void warranty). Be sure to include a brief description of the problem plus any relevant application notes. Contact customer service to receive a return goods authorization number before shipping.

©Copyright 2008 Dwyer Instruments, Inc.
Printed in U.S.A. 7/08 FR# 89-440838-10 Rev.2

DWYER INSTRUMENTS, INC.
P.O. BOX 373 • MICHIGAN CITY, INDIANA 46361, U.S.A.
Phone: 219/879-8000 www.dwyer-inst.com
Fax: 219/872-9057 e-mail: info@dwyer-inst.com

Corrected calibration for FIT-3001, Feb 2016

Tag Name / ID: **FIT-3001**	**Transducer/Transmitter Calibration/Verification**	Manufacture **Seimens/McCrometer**
Contract ID **15-056** / ISA S20 Sheet		Model Number **7MF4433-1EA22/VH03-A1SF3**
Ambient Conditions Temperature **60** °C (°F) Pressure **n/a** mm Hg Humidity **n/a** %	Loop Number **3000** ☐ Initial Calibration ☑ Verification	Serial Number **1X-C314-9002789/15-1854** Calibration Range 0 to 160 DP **0** to **250** **gpm**

1. Visual Inspection: Mechanical connections ☑ Finish ☑ Nameplate/ID Tag ☑ Mounted at correct height ☑
2. Electrical: Conduit Connections ☑ Terminal/Wire Labels ☑ Conduit ID ☐
3. Calibration Proof test at: zero
4. Action: Direct ☑ Indirect ☐ Linear ☐ Non-linear ☐ Square Root ☑
5. Loop Voltage **24 VDC** 4-Wire ☐ 2-Wire ☑
6. Load Impedance **N/A** ohms max @ 24 vdc

Calibration Points

%	Input DP	Expected Output (mADC)	Meter EU GPM	As Found Data: Output Increase	As Found Data: Output Decrease	As Found Data: Maximum Output Error	As Left Data: Output Increase	As Left Data: Output Decrease	As Left Data: Maximum Output Error
0	**0.00**	**4.00**	**0.00**	0	0	± 0	0	0	± 0
10	-					±			±
20	-					±			±
25		**8.00**	**62.50**	0	0	± 0	0	0	± 0
30	-					±			±
40	-					±			±
50	**40.04**	**12.00**	**125.00**	0	0	± 0	0	0	± 0
60	-		-			±			±
70	-		-			±			±
75		**16.00**	**187.50**	0	0	± 0	0	0	± 0
80	-		-			±			±
90	-		-			±			±
100	**160.16**	**20.00**	**250.00**	0	0	± 0	0	0	± 0

Test Equipment Used	Model No:	Serial No:	Calibration/Certification Date
☑ Fluke 789	789	14970085	February 7, 2016
☑ Emerson Filed Calibrator	375	12061955	N/A
☐			
☐			
☐			
☐			
☐			
☐			
☐			

Comments Mcrometer Vcone Fitted with Seimens DP transmimtter and setup per New Vcone cal parameteres
Zero of transmitter performed in field after media introduced to flow meter and stablized
Span verifed in field with actual field conditions and flow rate and visual DP recorded in Hart Communicator

Print Name: Robbie Satriana DCN 2/4/2016
Signed By: Robbie Satriana Date 2/4/2016
Approved By: Preston Patterson Date 2/4/2016

02-04-16

I&C Solutions LLC
4485 Irving Blvd
Albuquerque, NM 87114
505-821-8960 fax 505-821-8970

V-Cone® Application Sizing

Serial #	15-1854	Fluid	WATER
Tag		Fluid State	LIQUID
P.O. Ref.	462-056614	End User	
Model	VH03-A1SF3	Market	Other
		Application	Other

Mark/App Code ZZZ

Description	Wafer-Cone 3"
Note	

C_d	0.8872	
P_f	150	psiG
T_f	75	°F
ρ	62.13	lb/ft3
μ	0.9353	cP
G		
Z		
Y		
k		
C_P		
Mw	18.015	
P_b		
T_b		
Z_b		
P_{atm}	14.696	psi
P_c	3198.8	psi
T_c	705.16	°F
F_a	1.000	
aPE	D 6.7e-06	d 6.7e-06
P_v	0.4302	psi
P_{loss}	2.818	psi

⇐ Entered value.

q	max. Flowrate	250	GPM
Re	max. Reynolds	2.901e+05	
V	max. Velocity	12.14	fps
ΔP	max. Dp	160.16	inWC
ΔP	min. Dp	1.6016	inWC
D	Meter I.D.	2.9000	in
d	Cone O.D.	2.2038	in
β	Beta Ratio	0.6500	
	Turn Down	10	

McCrometer Eng. AlBa

	Re	Cd	Velocity fps	Gas. Exp. Y	ΔP inWC	Flowrate GPM
1	2.901e+05	0.8872	12.14		160.16	250.00
2	2.611e+05	0.8872	10.93		129.73	225.00
3	2.321e+05	0.8872	9.715		102.50	200.00
4	2.031e+05	0.8872	8.500		78.479	175.00
5	1.741e+05	0.8872	7.286		57.658	150.00
6	1.451e+05	0.8872	6.072		40.041	125.00
7	1.160e+05	0.8872	4.857		25.625	100.00
8	8.703e+04	0.8872	3.643		14.415	75.000
9	5.802e+04	0.8872	2.429		6.4065	50.000
10	2.901e+04	0.8872	1.214		1.6016	25.000

Table based on one flow condition (P, T ,Z , k ...) V40 Version 2.0

Record Start Date	6/16/2015
Print Date	07-09-2015

McCROMETER

Corrected calibration for FIT 3108, Feb 2016

Tag Name / ID: FIT-3108		**Transducer/Transmitter Calibration/Verification**	Manufacture: Endress Hauser/McCrometer
Contract ID: N/A	ISA S20 Sheet		Model Number: DP141-200-02/VH03-A1SF3
Ambient Conditions Temperature 60 °C (°F) Pressure n/a mm Hg Humidity n/a %		Loop Number: 3000 ☐ Initial Calibration ☑ Verification	Serial Number: E15-01717/15-1022 Calibration Range 0 to 161 DP 0 to 500 gpm

1. Visual Inspection: Mechanical connections ☑ Finish ☑ Nameplate/ID Tag ☑ Mounted at correct height ☑
2. Electrical: Conduit Connections ☑ Terminal/Wire Labels ☑ Conduit ID ☐
3. Calibration Proof test at: zero
4. Action: Direct ☑ Indirect ☐ Linear ☐ Non-linear ☐ Square Root ☑
5. Loop Voltage 24 VDC 4-Wire ☐ 2-Wire ☑
6. Load Impedance N/A ohms max @ 24 vdc

Calibration Points

%	Input DP	Expected Output (mADC)	Meter EU GPM	As Found Data: Output Increase	As Found Data: Output Decrease	As Found Data: Maximum Output Error	As Left Data: Output Increase	As Left Data: Output Decrease	As Left Data: Maximum Output Error
0	**0.00**	**4.00**	**0.00**	0	0	± 0	0	0	± 0
10	-					±			±
20	-					±			±
25		**8.00**	**125.00**	0	0	± 0	0	0	± 0
30	-					±			±
40	-					±			±
50	**40.13**	**12.00**	**250.00**	0	0	± 0	0	0	± 0
60	-		-			±			±
70	-		-			±			±
75		**16.00**	**375.00**	0	0	± 0	0	0	± 0
80	-		-			±			±
90	-		-			±			±
100	**160.58**	**20.00**	**500.00**	0	0	± 0	0	0	± 0

Test Equipment Used	Model No:	Serial No:	Calibration/Certification Date
☐ Fluke 789	789	14970085	February 7, 2016
☑ Emerson Filed Calibrator	375	12061955	N/A
☐			
☐			
☐			
☐			
☐			
☐			
☐			

Comments This was a rescale only from 0-400GPM to 0-500GPM directed by customer, performed a zero only

Span verifed in field with actual field conditions and flow rate and visual DP recorded in Hart Communicator

Print Name: Robbie Satriana DCN 2/2/2016
Signed By: Robbie Satriana Date 2/2/2016
Approved By: Preston Patterson Date 2/2/2016

02-04-16

I&C Solutions LLC
4485 Irving Blvd
Albuquerque, NM 87114
505-821-8960 fax 505-821-8970

V-Cone® Application Sizing

Serial #	15-1022	Fluid	WATER
Tag		Fluid State	LIQUID
P.O. Ref.	518506	End User	
Model	VM04QE03F-E1HS-V3	Market	
		Application	
		Mark/App Code	

Description	4" VM meter
Note	

C_d	0.8104	
P_f	175	psiG
T_f	70	°F
ρ	62.18	lb/ft3
μ	0.9957	cP
G		
Z		
Y		
k		
C_P		
Mw	18.015	
P_b		
T_b		
Z_b		
P_{atm}	14.696	psi
P_c	3198.8	psi
T_c	705.16	°F
F_a	1.000	
aPE	D 6.7e-06	d 6.7e-06
P_v	0.3633	psi
P_{loss}	2.587	psi

⇐ Entered value.

q	max. Flowrate	500	GPM
Re	max. Reynolds	3.922e+05	
V	max. Velocity	12.56	fps
ΔP	max. Dp	160.58	inWC
ΔP	min. Dp	1.6058	inWC
D	Meter I.D.	4.0330	in
d	Cone O.D.	2.9460	in
β	Beta Ratio	0.6829	
	Turn Down	10	

McCrometer Eng. MaBa

	Re	Cd	Velocity fps	Gas. Exp. Y	ΔP inWC	Flowrate GPM
1	3.922e+05	0.8104	12.56		160.58	500.00
2	3.530e+05	0.8104	11.30		130.07	450.00
3	3.138e+05	0.8104	10.05		102.77	400.00
4	2.745e+05	0.8104	8.790		78.683	350.00
5	2.353e+05	0.8104	7.534		57.808	300.00
6	1.961e+05	0.8104	6.279		40.145	250.00
7	1.569e+05	0.8104	5.023		25.693	200.00
8	1.177e+05	0.8104	3.767		14.452	150.00
9	7.844e+04	0.8104	2.511		6.4231	100.00
10	3.922e+04	0.8104	1.256		1.6058	50.000

Table based on one flow condition (P, T ,Z , k ...) V40 Version 2.0

Record Start Date	3/31/2015
Print Date	01-25-2016

McCROMETER

Corrected Calibration for FIT 3102, Feb 016

Tag Name / ID: **FIT-3102**	**Transducer/Transmitter Calibration/Verification**	Manufacture **Endress Hauser/McCrometer**
Contract ID **N/A** / ISA S20 Sheet		Model Number **DD141-200-02/VH03-A1SF3**
Ambient Conditions Temperature **60** °C (°F) Pressure **n/a** mm Hg Humidity **n/a** %	Loop Number **3000** ☐ Initial Calibration ☑ Verification	Serial Number **E15-01718/15-1023** Calibration Range 0 to 159 DP **0** to **500** **gpm**

1. Visual Inspection: Mechanical connections ☑ Finish ☑ Nameplate/ID Tag ☑ Mounted at correct height ☑
2. Electrical: Conduit Connections ☑ Terminal/Wire Labels ☑ Conduit ID ☐
3. Calibration Proof test at: zero
4. Action: Direct ☑ Indirect ☐ Linear ☐ Non-linear ☐ Square Root ☑
5. Loop Voltage **24 VDC** 4-Wire ☐ 2-Wire ☑
6. Load Impedance **N/A** ohms max @ 24 vdc

Calibration Points

%	Input DP	Expected Output (mADC)	Meter EU GPM	As Found Data: Output Increase	As Found Data: Output Decrease	As Found Data: Maximum Output Error	As Left Data: Output Increase	As Left Data: Output Decrease	As Left Data: Maximum Output Error
0	**0.00**	**4.00**	**0.00**	0	0	± 0	0	0	± 0
10	-					±			±
20	-					±			±
25		**8.00**	**125.00**	0	0	± 0	0	0	± 0
30	-					±			±
40	-					±			±
50	**39.81**	**12.00**	**250.00**	0	0	± 0	0	0	± 0
60	-		-			±			±
70	-		-			±			±
75		**16.00**	**375.00**	0	0	± 0	0	0	± 0
80	-		-			±			±
90	-		-			±			±
100	**159.24**	**20.00**	**500.00**	0	0	± 0	0	0	± 0

Test Equipment Used	Model No:	Serial No:	Calibration/Certification Date
☐ Fluke 789	789	14970085	February 7, 2016
☑ Emerson Filed Calibrator	375	12061955	N/A
☐			
☐			
☐			
☐			
☐			
☐			
☐			

Comments This was a rescale only from 0-400GPM to 0-500GPM directed by customer, performed a zero only

Span verifed in field with actual field conditions and flow rate and visual DP recorded in Hart Communicator

Print Name: Robbie Satriana DCN 2/2/2016
Signed By: Robbie Satriana Date 2/2/2016
Approved By: Preston Patterson Date 2/2/2016

02-04-16

I&C Solutions LLC
4485 Irving Blvd
Albuquerque, NM 87114
505-821-8960 fax 505-821-8970

V-Cone® Application Sizing

Serial #	15-1023	Fluid	WATER
Tag		Fluid State	LIQUID
P.O. Ref.	518505	End User	
Model	VM04QE03F-E1HS-V3	Market	
		Application	
		Mark/App Code	

Description	4" VM meter
Note	

C_d	0.8138	
P_f	175	psiG
T_f	70	°F
ρ	62.18	lb/ft3
μ	0.9957	cP
G		
Z		
Y		
k		
C_P		
Mw	18.015	
P_b		
T_b		
Z_b		
P_{atm}	14.696	psi
P_c	3198.8	psi
T_c	705.16	°F
F_a	1.000	
aPE	D 6.7e-06	d 6.7e-06
P_v	0.3633	psi
P_{loss}	2.565	psi

⇐ Entered value.

q	max. Flowrate	500	GPM
Re	max. Reynolds	3.922e+05	
V	max. Velocity	12.56	fps
ΔP	max. Dp	159.24	inWC
ΔP	min. Dp	1.5924	inWC
D	Meter I.D.	4.0330	in
d	Cone O.D.	2.9460	in
β	Beta Ratio	0.6829	
	Turn Down	10	

McCrometer Eng. MaBa

	Re	Cd	Velocity fps	Gas. Exp. Y	ΔP inWC	Flowrate GPM
1	3.922e+05	0.8138	12.56		159.24	500.00
2	3.530e+05	0.8138	11.30		128.98	450.00
3	3.138e+05	0.8138	10.05		101.91	400.00
4	2.745e+05	0.8138	8.790		78.027	350.00
5	2.353e+05	0.8138	7.534		57.325	300.00
6	1.961e+05	0.8138	6.279		39.810	250.00
7	1.569e+05	0.8138	5.023		25.479	200.00
8	1.177e+05	0.8138	3.767		14.332	150.00
9	7.844e+04	0.8138	2.511		6.3696	100.00
10	3.922e+04	0.8138	1.256		1.5924	50.000

Table based on one flow condition (P, T ,Z , k ...) V40 Version 2.0

Record Start Date	3/31/2015
Print Date	01-25-2016

McCROMETER

RUPERT PLUMBING AND HEATING

PIPE FABRICATION

40 05 13-2.1: Product Data—Part 2 additional items

aw
10/6/15

This section contains the following:

- 3 way valve –revised for two separate valves—one 6" and one 2"

ACS 10/6/15

Technical Data

Components & Materials

Carbon Steel bodies on Valve sizes 1/2" – 4" are Black Phosphate Coated.

All Stainless Steel bodies are solution annealed/ normalized.

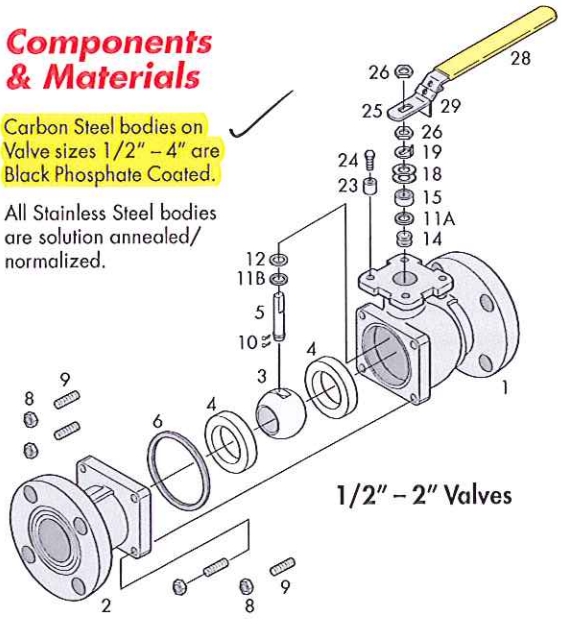

1/2" – 2" Valves

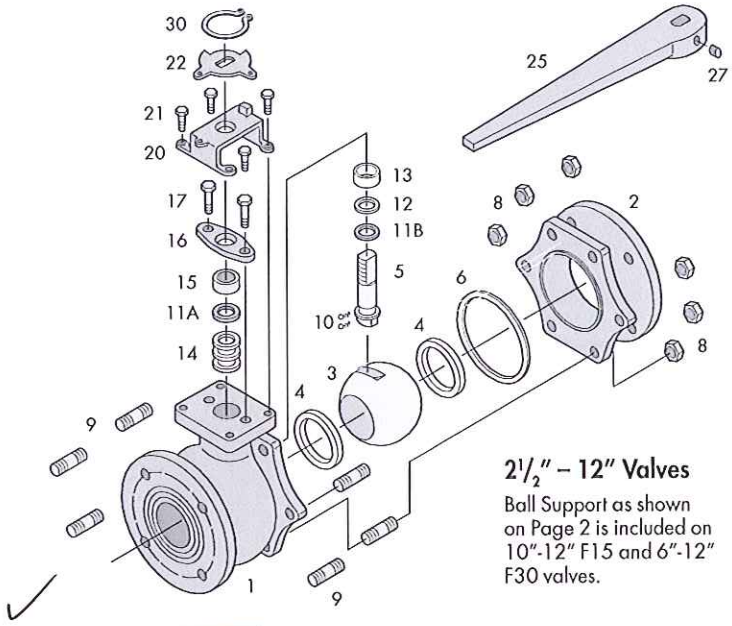

2½" – 12" Valves

Ball Support as shown on Page 2 is included on 10"-12" F15 and 6"-12" F30 valves.

Item	Name	Stainless Steel	Carbon Steel	Qty.
1	Body	ASTM A351 Gr CF8M	ASTM A216 Gr WCB	1
2	End Cap	ASTM A351 Gr CF8M	ASTM A216 Gr WCB	1
3	Ball	ASTM A351 Gr CF8M	ASTM A351 Gr CF8M	1
4	Seat	TFM 1600	TFM 1600	2
5	Stem	ASTM A479 Type 316	ASTM A479 Type 316	1
6	Body Seal	Spiral Wound (316/Graphite)	Spiral Wound (316/Graphite)	1
8	Body Nut	ASTM A194 Gr 8	ASTM A194 2H	*
9	Body Stud	ASTM A193 B8	ASTM A193 B7	*
10	Anti-Static Device	SS304	SS304	2
11 A	Packing Protector	PEEK	PEEK	1
11 B	Thrust Washer Protector	PEEK	PEEK	1
12	Thrust Washer	Tek-Fil	Tek-Fil	1
13	Stem Bearing	15% RPTFE	15% RPTFE	1
14	Stem Packing	RPTFE/Graphite	RPTFE/Graphite	3/1
15	Packing Gland	ASTM A167 Type 304	ASTM A167 Type 304	1
16	Packing Follower	ASTM A351 Gr CF8M	ASTM A216 Gr WCB	1
17	Gland Bolt	SS304	SS304	2
18	Belleville Washer	SS301	SS301	2
19	Tab Lock Washer	SS304	SS304	1
20	Travel Stop Housing	CF8M	WCB	1
21	Housing Bolt	SS304	Alloy Steel	4
22	Travel Stop	SS304	Zinc Plated Carbon Steel	1
23	Travel Stop Sleeve	ASTM A167 Type 304	ASTM A167 Type 304	1
24	Travel Stop Bolt	SS304	SS304	1
25	Handle	SS304/**Ductile Iron	SS304/**Ductile Iron	1
26	Lock Nut	ASTM A167 Type 304	ASTM A167 Type 304	2
27	Handle Bolt	Carbon Steel	Carbon Steel	1
28	Handle Sleeve	Vinyl through 2"	Vinyl through 2"	1
29	Locking Device	SS304	SS304	1
30	Snap Ring	Nickel Plated Carbon Steel	Nickel Plated Carbon Steel	2

*Quantity depends on valve size. ** 2-½" and larger valves.

Flow-Tek offers the seat, body seal, thrust washer and stem packing as recommended spare parts. These parts are available as a packaged repair kit.

Specifications

End Connections meet ASME Class 150/300.
Flanges meet ASME B16.5 raised face.
Face to Face Dimensions meet ASME B16.10 long pattern.
All Valves meet ASME B16.34, API 608, & MSS-SP 72.
All Valves are certified to API 607 4th Edition (with Graphite Stem Packing).
NACE MR0175–Consult Factory.

All Valves are Hydrostatically Pressure Tested (Shell) and Air Pressure Tested (Seat) to the following in psi:
Class 150: Shell 450 [CS] 425 [SS] Seat 80
Class 300: Shell 1125 [CS] 1100 [SS] Seat 80
Valves meet or exceed ASME Class VI shutoff.

Pressure / Temperature

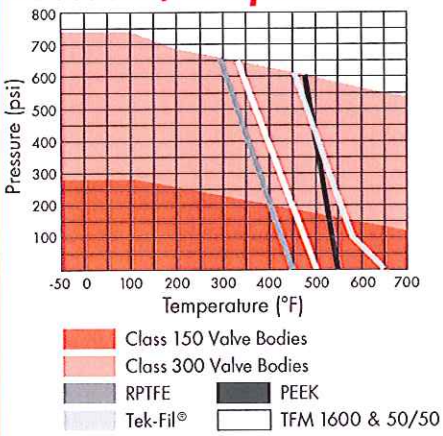

Note: Carbon Steel valves limited to -20°F.

Steam Service Pressure Ratings: WSP

Valve	TFM Seats PSI	TFM Seats °F	Tek-Fil Seats PSI	Tek-Fil Seats °F	PEEK Seats PSI	PEEK Seats °F
Class 150	150	365	190	450	170	500
Class 300	150	365	425	450	425	500

Vacuum Service to 29.9 inches Hg. gauge.

ars 10/6/15

Dimensions

MODEL F15 – Class 150

SIZE ins (mm)	A	øB	C	C1	D	E	øF	N	øS	øT	C_V	TORQUE * lbs-in (kg-Nm)	WEIGHT lbs. (kg.)
1/2	4.25	0.59	2.60	1.54	6.50	1.79	3.50	4	2.38	0.62	32	36	4
15	108.0	15.0	66.0	39.0	165.0	45.5	88.9		60.5	15.8	28	4	2
3/4	4.62	0.79	2.91	1.67	6.50	2.01	3.88	4	2.75	0.62	60	65	5
20	117.0	20.0	73.9	42.4	165.0	51.0	98.6		69.9	15.8	52	7	2
1	5.00	0.98	3.43	2.05	7.87	2.13	4.25	4	3.12	0.62	105	95	10
25	127.0	24.9	87.0	52.0	199.9	54.0	108.0		79.0	15.8	91	11	4.5
1-1/2	6.50	1.49	4.23	2.60	9.84	2.76	5.00	4	3.88	0.62	275	230	14
40	165.0	37.9	107.0	66.0	249.9	70.0	127.0		98.6	15.8	238	26	6
2	7.00	1.97	4.53	2.95	10.43	3.07	6.00	4	4.75	0.75	500	390	20.5
50	177.8	50.0	115.0	74.9	264.9	78.0	152.0		120.7	19.0	433	44	9
2-1/2	7.50	2.56	6.22	3.39	15.35	3.08	7.00	4	5.50	0.75	780	500	36
65	190.5	65.0	158.0	86.0	389.9	78.0	177.8		139.7	19.0	675	56	16
3	8.00	2.99	6.54	3.66	15.35	3.74	7.50	4	6.00	0.75	1,150	650	45
80	203.0	76.0	166.0	93.0	389.9	95.0	190.5		152.0	19.0	995	73	20
4	9.00	3.99	7.20	4.39	15.35	4.47	9.00	8	7.50	0.75	2,100	1,505	65
100	228.6	101.0	182.9	111.5	389.9	113.5	228.6		190.5	19.0	1,817	170	29.5
6	15.50	5.98	11.22	7.17	15.35	7.62	11.00	8	9.50	0.88	5,000	3,250	157
150	393.7	151.9	284.9	182.0	389.9	193.6	279.0		241.0	22.0	4,325	367	71
8	18.00	7.87	12.72	7.60	38.98	8.35	13.50	8	11.75	0.88	9,600	4,750	290
200	457.0	199.9	323.0	193.0	990.0	212.0	342.9		298.5	22.0	8,304	537	132
10	21.00	9.84	13.70	9.88	38.98	10.47	16.00	12	14.25	1.00	15,000	13,700	500
250	533.0	249.9	348.0	251.0	990.0	265.9	406.0		362.0	25.0	12,975	1,548	227
12	24.00	11.81	15.28	11.46	38.98	12.01	19.00	12	17.00	1.00	21,000	19,700	700
300	609.6	300.0	388.0	291.0	990.0	305.0	482.6		431.8	25.0	18,165	2,226	318

Face to Face dimensions meet ASME B16.10 long pattern.
***Torque** at maximum rated pressure, clean water, TFM 1600 seating material. Other seat materials exhibit different torques.
Please refer to TB 1005 for specific torques.

MODEL F30 – Class 300

SIZE ins (mm)	A	øB	C	C1	D	E	øF	N	øS	øT	C_V	TORQUE * lbs-in (kg-Nm)	WEIGHT lbs. (kg.)
1/2	5.50	0.59	2.60	1.57	6.50	2.44	3.75	4	2.62	0.62	32	40	5
15	139.7	15.0	66.0	39.9	165.0	62.0	95.0		66.6	15.8	28	5	2
3/4	6.00	0.79	2.91	1.67	6.50	2.72	4.62	4	3.25	0.75	60	70	7
20	152.0	20.0	73.9	42.0	165.0	69.0	117.0		82.6	19.0	52	8	3
1	6.50	0.98	3.43	2.05	7.87	2.91	4.88	4	3.50	0.75	105	108	10
25	165.0	24.9	87.0	52.0	199.9	73.9	124.0		88.9	19.0	91	12	5
1-1/2	7.50	1.49	4.23	2.60	9.84	3.27	6.12	4	4.50	0.88	275	270	19
40	190.5	37.9	107.0	66.0	249.9	83.0	155.5		114.0	22.0	238	31	9
2	8.50	1.97	4.53	2.95	10.43	3.94	6.50	8	5.00	0.75	500	445	25
50	215.9	50.0	115.0	74.9	264.9	100.0	165.0		127.0	19.0	433	50	11
2-1/2	9.50	2.56	6.22	3.39	15.35	4.18	7.50	8	5.88	0.88	780	600	44
65	241.0	65.0	158.0	86.0	389.9	106.0	190.5		149.0	22.0	675	68	20
3	11.12	2.99	6.54	3.72	15.35	5.57	8.25	8	6.62	0.88	1,150	850	61
80	282.5	76.0	166.0	94.5	389.9	141.5	209.6		168.0	22.0	995	96	27.7
4	12.00	3.99	7.20	4.35	15.35	5.96	10.00	8	7.88	0.88	2,100	2,600	96
100	304.8	101.0	182.9	110.5	389.9	151.0	254.0		200.0	22.0	1,817	294	44
6	15.88	5.98	11.22	7.19	38.98	7.60	12.50	12	10.62	0.88	5,000	5,300	243
150	403.0	151.9	285.0	182.6	990.0	193.0	317.5		269.8	22.0	4,325	599	110
8	19.75	7.87	12.72	8.64	38.98	9.33	15.00	12	13.00	1.00	9,600	7,600	430
200	501.7	199.9	323.0	219.5	990.0	237.0	381.0		330.0	25.0	8,304	859	195
10	22.38	9.84	13.70	9.69	38.98	11.18	17.50	16	15.25	1.12	15,000	17,800	610
250	568.5	249.9	348.0	246.0	990.0	284.0	444.5		387.0	28.5	12,975	2,011	277
12	25.50	11.81	15.28	11.26	38.98	12.80	20.50	16	17.75	1.25	21,000	24,800	950
300	647.7	300.0	388.0	286.0	990.0	325.0	520.7		450.9	31.8	18,165	2,802	431

SECURE MOUNT

SIZE ins (mm)	H	J	Fo	BC DIA.	K	L	M	øP	U UNC
1/2	1.17	1.17	F04	1.65	0.31	0.61	0.25	0.37	#10-24
15	29.7	29.7		41.9	7.9	15.5	6.0	9.4	
3/4	1.17	1.17	F04	1.65	0.31	0.61	0.25	0.37	#10-24
20	29.7	29.7		41.9	7.9	15.5	6.0	9.4	
1	1.39	1.39	F05	1.97	0.43	0.82	0.31	0.43	1/4-20
25	35.0	35.0		50.0	10.9	20.8	7.9	10.9	
1-1/2	1.95	1.95	F07	2.76	0.55	0.95	0.37	0.62	5/16-18
40	49.5	49.5		70.0	14.0	24.0	9.0	15.8	
2	1.95	1.95	F07	2.76	0.55	0.95	0.37	0.62	5/16-18
50	49.5	49.5		70.0	14.0	24.0	9.0	15.8	
2-1/2-4	3.54	1.87	F10	—	1.75	3.10	0.67	1.10	1/2-13
65-100	89.9	47.5			44.5	78.7	17.0	27.9	
6	3.37	3.37	F12	4.77	1.61	3.58	1.02	1.71	1/2-13
150	85.6	85.6		121.0	40.9	90.9	25.9	43.0	
8[1]	3.37	3.37	F12	4.77	2.13[1]	3.58[1]	1.02	1.71	1/2-13
200	85.6	85.6		121.0	54.0	90.9	25.9	43.0	
10-12[2]	4.53	4.53	F16	6.40	2.15	3.86[2]	1.38	1.97[2]	5/8-11
250-300	115.0	115.0		162.6	54.6	98.0	35.0	50.0	

[1] For 8" F30: K=1.61, L=3.42 [2] For 10" F30: L=3.82, P=2.165

NOTE 1: Ball Support as shown on Page 2 is included on 10"-12" F15 and 6"-12" F30 valves.
NOTE 2: $2^1/_2$", 3" & 4" valves feature a NAMUR stem slot for ease of limit switch mounting.

1/2" – 2" Valves

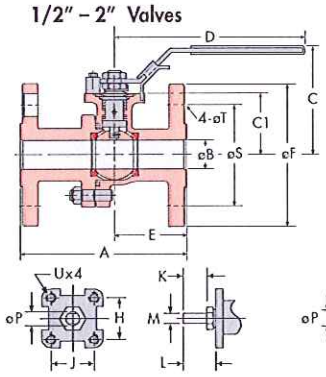

$2^1/_2$ – 12" Valves

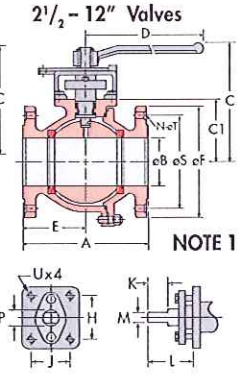

FlowTek®
A Subsidiary of BRAY INTERNATIONAL, Inc.
8323 N. Eldridge Pkwy #100 Houston, Texas 77041
832.912.2300 Fax: 832.912.2301
www.flow-tek.com

All statements, technical information, and recommendations in this bulletin are for general use only. Consult Flow-Tek representatives or factory for the specific requirements and material selection for your intended application. The right to change or modify product design or product without prior notice is reserved.

Flow-Tek® is a registered trademark of Flow-Tek, Inc.
© 2010 Flow-Tek, Inc.

F-2400_EN_F15-30_2010-10

BRAY SERIES 70

MODULATING ACTUATOR - SERVO PRO

For precision control of valve position. The Bray Series 70 Electric Actuator can be equipped with a Servo for precise control of valve position. The Servo consists of a microprocessor controlled circuit board and a feedback potentiometer assembly, which both fit entirely within the standard Series 70 actuator housing. The circuit board has terminal blocks for customer field wiring, and other terminals for internal connections to the actuator components. The feedback potentiometer is driven by a gear set connected to the actuator output drive. Also available are Servos capable of serial BUS communication, such as DeviceNet.

VOLTAGE SPIKE PROTECTION: Voltage spikes that can damage electrical equipment are very common in industrial locations. Large voltage spikes can be caused by switching power loads, such as large motor drives, at the customer location. The output stage triacs of the Servo Pro are protected against damage from voltage spikes by a special combination of:

- **Limit Switch Circuitry**
- **Metal Oxide Varistor (MOV) For Transient Voltage Suppression**
- **Zero Crossing Detection**

DeviceNet Servo PRO: Bray also offers the Series 70 with the most advanced serial BUS communication Servo on the market. The Bray DeviceNet Servo Pro is fully ODVA (Open DeviceNet Vendor Association) compliant. Benefits include greatly simplified field wiring and installation, advanced control and diagnostics in real-time from a remote location, and full network integration. Please contact your Bray representative for more information.

SERVO PRO FEATURES / SPECIFICATIONS

Servo is available for modulating service, continuous duty actuators only.

Power Input	24 , 120 or 220 VAC, 50/60 Hz (power must match motor)
Power Consumption	2 Watts (not including actuator power)
Input Signal	Standard: 4-20 mADC Configurable: 1. 0-10 VDC 2. 2-10 VDC 3. 10K Ohm or greater potentiometer,
Calibration	Single Button Autocalibration
Indicators	Power: Green LED Status: Flashing Red / Green LED Motor: Red LED (Close), Green LED (Open)
Control Modes	Standard: Full Range, Direct Acting Configurable: Reverse Acting, Split Range
Fail Position (Loss Of Input Signal)	Standard: Fail Closed Configurable: Fail Open
Control Characteristic	Linear
Duty Cycle	100%
Internal Feedback	10K Ohm Potentiometer, gear driven
Retransmission Output	Standard: 4-20 mADC Configurable: 0-5 VDC, 0-10 VDC, 2-10 VDC Retransmission Output is designed to drive an isolated 250–500 Ohm resistive load.
Speed Control	Standard: Full Speed (Speed Control is Disabled) Configurable: Bidirectional–Independent Open and Close Trim Pots adjustment

"Standard" is the way the Servo is set at the factory.

"Configurable" means the customer, or the factory, can modify the Servo by setting DIP switche(s).

WATERPROOF ENCLOSURE
S70-003 TO S70-065

ACS
10/6/15

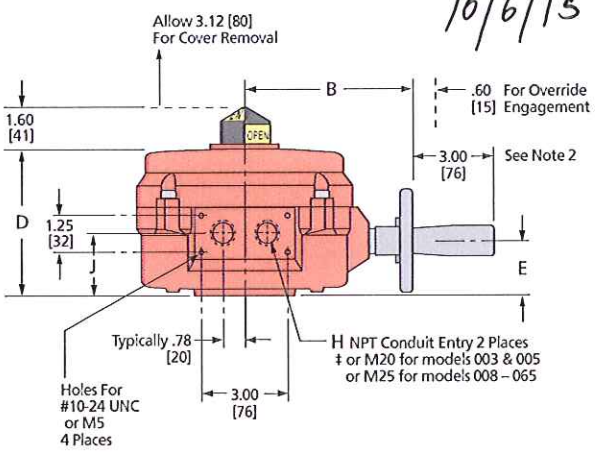

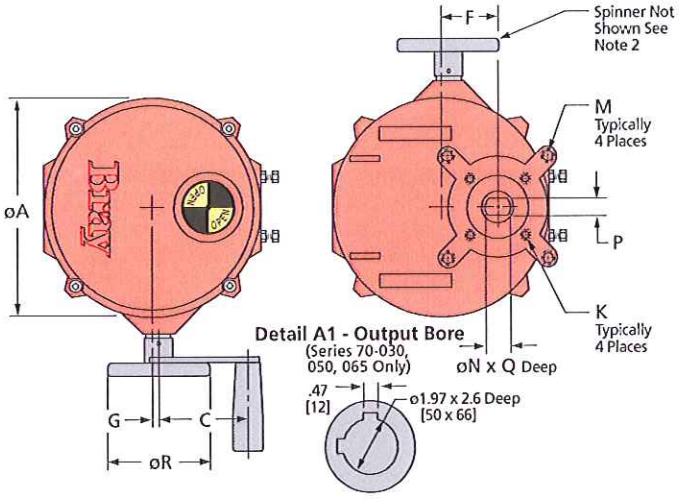

IMPERIAL DIMENSIONS - Inches

Actuator Series	A	B	C	D	E	F	G	H	J	K (UNC) x B.C.	M (UNC) x B.C.	N	P	Q	øR	S	T	U	Weight lbs
S70-003 S70-005	7.5	5.6	3.0	5.1	1.9	1.94	.19	1/2‡	2.0	5/16-18 x ø2.76 F07	—	.75	.51	1.75	3.5	–	–	–	12
S70-008 S70-012 S70-020	10.1	7.8	3.7	6.5	2.5	2.69	.56	3/4‡	2.6	5/16-18 x ø2.76 F07	1/2-13 x ø4.92 F12	1.18	.87	2.20	8	–	–	–	28
S70-030 S70-050 S70-065	12.1	9.5	5.6	7.2	2.9	3.19	.56	3/4‡	3.1	1/2-13 x ø4.92 F12	3/4-10 x ø6.50 F16	See Detail A1			12	–	–	–	48

METRIC DIMENSIONS - Millimeters

Actuator Series	A	B	C	D	E	F	G	H	J	K (UNC) x B.C.	M (UNC) x B.C.	N	P	Q	øR	S	T	U	Weight kgs
S70-003 S70-005	191	142	76	130	48	49.3	4.8	1/2‡	51	5/16-18 x ø2.76 F07	—	19	13	44	89	–	–	–	6
S70-008 S70-012 S70-020	257	198	94	165	64	68.3	14.2	3/4‡	66	5/16-18 x ø2.76 F07	1/2-13 x ø4.92 F12	30	22	56	203	–	–	–	13
S70-030 S70-050 S70-065	307	241	142	183	74	81	14.2	3/4‡	79	1/2-13 x ø4.92 F12	3/4-10 x ø6.50 F16	See Detail A1			305	–	–	–	22

Notes:

‡ The duty cycle for intermittent on-off operation is 25%. The continuous duty actuator with Servo is rated for 100% modulating operation.
2) Handwheel Spinner shown in drawing is available as an option.
3) K & M Dimensions are also available in M8, M12, and M20.
4) N Dimension is also available with Double Square (Star) drive.

Drawings are for reference only. Please refer to Bray ES drawings on the Bray website, www.bray.com. Bray reserves the right to change product dimensions without notice.

SR Drawing #70-003/065-im - August 2012- Rev. 0

Inquire/P.O. No.:_____

Customer/Project: _____

Bray Order No.: _____

Bray® SERIES 70

2ND GENERATION ELECTRIC ACTUATOR

OPERATION AND MAINTENANCE MANUAL

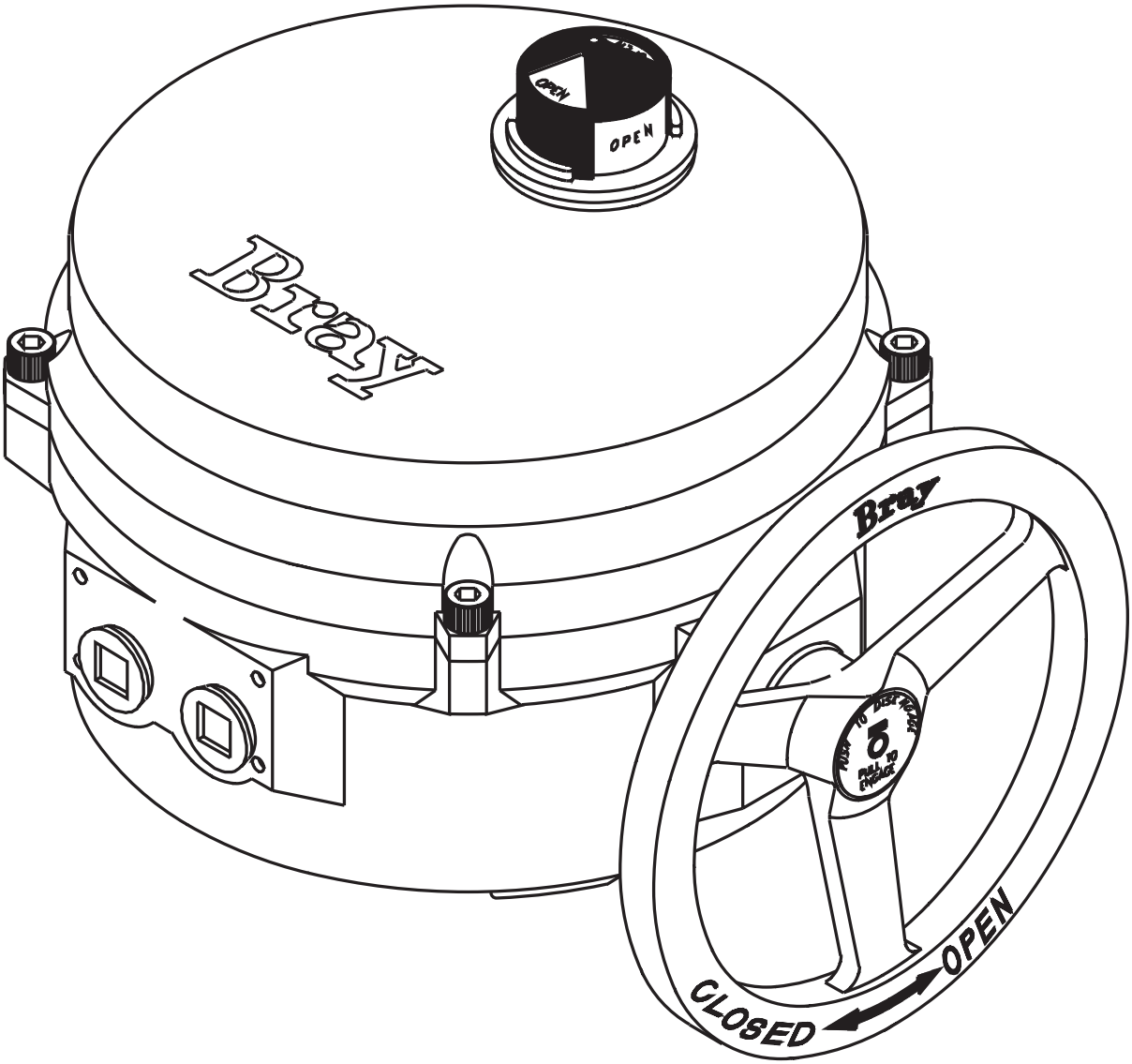

The High Performance Company

Table of Contents

Safety Instructions - Definition of Terms . . . 2
Hazard-Free Use . . . 2
Qualified Personnel . . . 2
Part Numbering System Reference Chart . . . 3
Introduction . . . 3
- Principle of Operation . . . 3
- Electrical Operation . . . 3
- General Electrical Schematic . . . 3
- Mechanical Operation . . . 3
- Manual Override Operation (Declutchable) . . . 4
- Pre-Installation Storage . . . 4

Installation . . . 4
- Mounting to a Valve . . . 4
- Field Wiring . . . 4
- Multiple Actuator (Parallel) Wiring . . . 5
- Actuator Diagram without I.R.B. . . . 5
- Travel Limit Switch and Mechanical Travel Stop Adjustment . . . 5
- S70 On/Off Actuator with Interposing Relay Board (I.R.B.) . . . 5
- Close Travel Switch Adjustment . . . 6
- Open Travel Switch Adjustment . . . 6

Disassembly and Assembly . . . 7
- Procedure . . . 7

Field or Factory Installable Options . . . 8
- Torque Switches . . . 8
- Torque Switch Mechanism . . . 8
- Heater . . . 9
  - Installation Procedure . . . 9
- Servo-Pro Module . . . 9
  - Installation Procedure . . . 10
  - Servo Calibration . . . 10
- External Signal Feedback Potentiometer . . . 11
  - Installation Procedure . . . 11
  - Set the Potentiometer . . . 11
- Auxiliary Switches . . . 11
  - Installation Procedure . . . 11
- Auxiliary Switch Configuration Chart . . . 12
- Typical Wiring Diagram: On/Off Service . . . 13
- Typical Wiring Diagram: Modulating Service . . . 14
- Adjustments, Calibration and Status LED of Servo Pro . . . 15
- Receptacles (Quick Connectors) . . . 16
- Spinner . . . 17
- Local Control Station (Single Phase Powered Actuators) . . . 17

Appendix A . . . 18
- Basic Tools . . . 18

Appendix B . . . 19
- Actuator Troubleshooting Chart . . . 19
- S70 Servo Pro Troubleshooting Chart . . . 20

Appendix C - Exploded Views . . . 21
- Series 70 - Housing Size 6 . . . 21
- Series 70 - Housing Size 12 . . . 22
- Series 70 - Housing Size 30 . . . 23
- Series 70 - Housing Size 180 for 3:1 Gear Box . . . 24
- Series 70 - 3:1 Gear Box . . . 25

For information on this product and other Bray products please visit us at our web page - www.bray.com

Safety Instructions - Definition of Terms

READ AND FOLLOW THESE INSTRUCTIONS
SAVE THESE INSTRUCTIONS

WARNING	indicates a potentially hazardous situation which, if not avoided, **could** result in death or serious injury.
CAUTION	indicates a potentially hazardous situation which, if not avoided, may result in minor or moderate injury.
NOTICE	used without the safety alert symbol indicates a potential situation which, if not avoided, may result in an undesirable result or state, including property damage.

HAZARD-FREE USE

This device left the factory in proper condition to be safely installed and operated in a hazard-free manner. The notes and warnings in this document must be observed by the user if this safe condition is to be maintained and hazard-free operation of the device assured.

Take all necessary precautions to prevent damage to the actuator due to rough handling, impact, or improper storage. Do not use abrasive compounds to clean the actuator, or scrape metal surfaces with any objects.

The control systems in which the actuator is installed must have proper safeguards to prevent injury to personnel, or damage to equipment, should failure of system components occur.

QUALIFIED PERSONNEL

- A qualified person in terms of this document is one who is familiar with the installation, commissioning and operation of the device and who has appropriate qualifications, such as:
- Is trained in the operation and maintenance of electric equipment and systems in accordance with established safety practices
- Is trained or authorized to energize, de-energize, ground, tag and lock electrical circuits and equipment in accordance with established safety practices
- Is trained in the proper use and care of personal protective equipment (PPE) in accordance with established safety practices
- Is trained in first aid
- In cases where the device is installed in a potentially explosive (hazardous) location – is trained in the operation, commissioning, operation and maintenance of equipment in hazardous locations

WARNING

The actuator must only be installed, commissioned, operated and repaired by qualified personnel.

The device generates large mechanical force during normal operation.

All installation, commissioning, operation and maintenance must be performed under strict observation of all applicable codes, standards and safety regulations.

Reference is specifically made here to observe all applicable safety regulations for actuators installed in potentially explosive (hazardous) locations.

PART NUMBERING SYSTEM REFERENCE CHART

Series	Torque Code	Speed	Product	Style	Voltage	Trim
70	AAA	X	113	Y	Z	536

Housing Size	Part Number	Torque (In.Lbs)	Speed, ¼ Turn (Seconds)	Supply (Z Voltage)
6	70-003**X**-113**YZ**-536	300	30/15	0/2/4
6	70-006**X**-113**YZ**-536	600	30	0/3/4
12	70-008**X**-113**YZ**-536	800	30/15/6	0/4/8
12	70-012**X**-113**YZ**-536	1200	30/15/6	0/4/9
12	70-020**X**-113**YZ**-536	2000	30/15	0/2/3/4/5/6/7/8
30	70-030**X**-113**YZ**-536	3000	30/18	0/2/4/5/6/7/8
30	70-050**X**-113**YZ**-536	5000	30/18	0/2/3/4/5/6/7/8
30	70-065**X**-113**YZ**-536	6500	30	0/2/4/5/6/7/8
180	70-13**WX**-113**YZ**-536	13000	110	0/4
180	70-18**WX**-113**YZ**-536	18000	110	0/4

Use this chart as a guide to interpret the S70 electric actuator part number.
Note: Not all combinations are possible.

W - DESIGNATES THE OUTPUT BORE DIAMETER

0	2.5 Inches
1	1.97 Inches

X - DESIGNATES THE SPEED

X:	0	1	2	3	4	5	6
Sec:	60	30	15/18	10	6	8	110

Y - DESIGNATES STYLE

A	Basic Unit - Declutchable
C	24VAC Unit with 24VAC Servo
D	With Interposing Relay Board*

*Only available for 120VAC or 220VAC On/Off units

Z - DESIGNATES THE VOLTAGE

Z:	0	1	2	3	4	5	6	7	8	9
Voltage:	120VAC	12VDC	24VDC	24VAC	220VAC	380V 3-PH	400V 3-PH	440V 3-PH	480V 3-PH	208V 3-PH

INTRODUCTION

The Bray Series 70 is a quarter turn electric actuator with manual override for use on any quarter turn valve requiring up to 18000 in.lb of torque. Operating speeds vary between 6 to 110 seconds.

PRINCIPLE OF OPERATION

The Series 70 actuator is divided into two internal sections; the power center below the switchplate, and the control center above the switchplate. Below the switchplate the capacitor and gearmotor with its spur geartrain drive a non-backdriveable worm gear output. The override mechanism for manual operation is also housed here. Above the switchplate is where user required, readily accessible components are placed. The camshaft assembly, limit switches, terminal strips, torque switches, heater, and servo are all placed here for easy access. External to the unit are adjustable mechanical travel stops, a large easy to read indicator, the unique manual override handwheel and dual conduit entry ports. The external coating is a high quality polyester powder coat which has exceptional UV as well as chemical resistance.

ELECTRICAL OPERATION

The motors used in the Bray Series 70 are either permanent induction split capacitor design (single phase AC power), SCI (Three Phase AC Power) or PM (DC Power). Travel limit switches are mechanical form (SPDT) with contacts rated at 10 amp (0.8 PF), 1/2 HP 125/250 VAC. In cases where the torque capacity of the unit is exceeded to the point where the motor stalls and overheats, a thermal protector switch built into the motor windings will automatically disconnect the motor power. Once the motor cools sufficiently the thermal protector switch will reset. Optional torque switches are available in all units to prevent the possibility of stalling the motor, thus reducing the necessity for an inoperable thermal cooldown period. Torque switches installed by Bray are factory adjusted to the output torque rating of the unit using electronic torque testing equipment.

NOTICE

Torque switches are not field adjustable. Adjustment of torque switches in the field will void warranty.

GENERAL ELECTRICAL SCHEMATIC

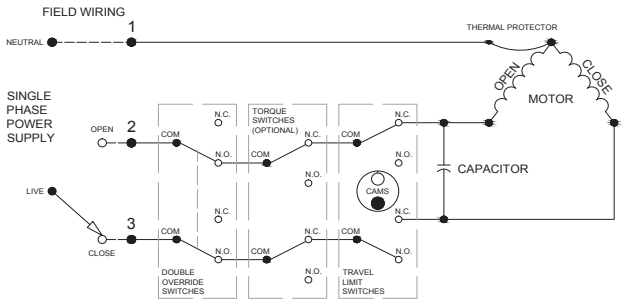

NOTE: *this is only a reference. For the actual wiring diagram refer to the diagram placed inside the actuator cover.*

MECHANICAL OPERATION

Mechanically, the ratio of the gearmotor determines the speed of the unit. The gearmotor utilizes high efficiency spur gears with various ratios for the different speeds. Initial gear reduction through the spur gears is then transferred to the worm shaft. The final gear reduction and output is through a non-backdriveable worm gear set. Positioning is determined by an indicator-cam shaft linked to the output shaft. In the declutchable condition the manual override drives the worm shaft when engaged.

MANUAL OVERRIDE OPERATION (DECLUTCHABLE)

The manual override operates similar to a watch adjusting knob. To engage the manual override, simply pull the handwheel to its outermost position. A yellow stripe is revealed for visual indication that the unit cannot run electrically. The two handwheel positions, engaged and disengaged, are held in place with the use of spring plungers. The handwheel remains in position until physically moved. Rotating the handwheel in the clockwise direction will rotate the output shaft in the same clockwise (closed) direction and vice-versa.

CAUTION

A label on the handwheel hub warns users not to exceed a specific rim pull force, for each size of actuator. If the rim pull force is exceeded, the roll pin securing the handwheel onto the manual override shaft is designed to shear, thus preventing more serious internal gearing damage.

PRE-INSTALLATION STORAGE

Actuators are not weatherproof until properly installed on the valve or prepared for storage. Bray cannot accept responsibility for deterioration caused on-site once the cover is removed.

NOTICE

Units are shipped with two metal screw-in plugs to prevent foreign matter from entering the unit. To prevent condensation from forming inside these units, maintain a near constant external temperature and store in a well-ventilated, clean, dry room away from vibration.

For units with an internal heater, power should be supplied to the heater via conduit entry and appropriate sealing gland.

Store units on a shelf or wooden pallet in order to protect against floor dampness.

Keep units covered to protect against dust and dirt.

INSTALLATION

MOUNTING TO A VALVE

All Bray Series 70 electric actuators are suitable for direct mounting on Bray butterfly valves. With proper mounting hardware, the S70 actuator can be installed onto other quarter-turn valves or devices.

NOTICE

The standard mounting position for the actuator is to orient the unit with its handwheel in a vertical plane and parallel to the pipeline. If the actuator is to be mounted on a vertical pipe, it is recommended that the unit be positioned with the conduit entries on the bottom to prevent condensation from entering the actuator by way of the conduit. In all cases, the conduit should be positioned to prevent drainage into the actuator.

The actuator should be mounted to the valve as follows:

1. Manually operate the actuator until the output shaft of the actuator is in line with the valve stem. If possible, select an intermediate position (i.e. valve disc/stem and actuator both half open).
2. Place the proper adapter, if required, onto the valve stem. It is recommended that a small amount of grease be applied to the adapter to ease assembly.
3. Mount the actuator onto the valve stem. It may be necessary to swing or manually override the actuator to align the bolt patterns.
4. Install the furnished mounting studs by threading them all the way into the actuator base.
5. Fasten in place with the furnished hex nuts and lock washers.

FIELD WIRING

WARNING

Turn off all power and lock out service panel before installing or modifying any electrical wiring.

Each actuator is provided with two (2) conduit entries (one for power and one for control).

1. The motor full load current is noted on the nameplate of the actuator. The terminal strip will accept wire sizes ranging from 14 to 22 AWG (14 to 24 AWG for the servo).

NOTICE

18 AWG minimum wire is recommended for all field wiring.

***Note** that the optional heaters use approximately 0.5 amps at 110 volts.*

2. **All actuators have their applicable wiring diagram attached to the inside of the cover.** Field wiring should be terminated at the actuator terminal strip in accordance with **this** wiring diagram.

NOTICE

The conduit connections must be properly sealed to maintain the weatherproof integrity of the actuator enclosure.

MULTIPLE ACTUATOR (PARALLEL) WIRING

CAUTION

Do not connect more than one S70 actuator which do not have I.R.B. installed to a single SPDT switch. A voltage is present on the opposite winding to the powered one. If this winding is connected to another as shown in the INCORRECT diagram it will interfere with the motor performance. Use a multiple pole switch as shown in the CORRECT diagram.

ACTUATOR DIAGRAM WITHOUT I.R.B.

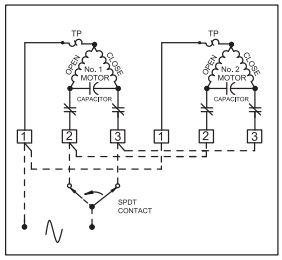

INCORRECT

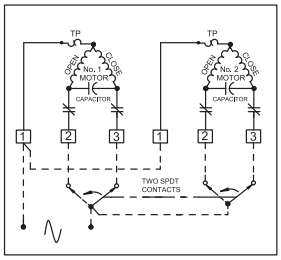

CORRECT

CAUTION

Do not reverse motor instantaneously when it is still running. Reversing direction to actuator motor when it is running can cause damage to motor, switches and gearing. Directional control switching can be done by PLC in 20ms or by a small relay in 46ms. Therefore time delay of 1s has to be incorporated into the control scheme to avoid damage.

TRAVEL LIMIT SWITCH AND MECHANICAL TRAVEL STOP ADJUSTMENT

CAUTION

The electrical travel switches **must** be set to activate (depress) prior to reaching the mechanical travel stops. The cams are color coded (green for open, red for closed).

NOTE: *Manual travel stops are designed to prevent manual overtravel from turning the handwheel, not to stop the electric motor. The travel stops have an adjustment range of approximately 10-degrees.*

S70 ON/OFF ACTUATOR WITH INTERPOSING RELAY BOARD (I.R.B.)

The back feeding of one actuator by another one wired in parallel is eliminated by using the I.R.B.

If actuator is running Open and customer switches “instantaneously” to run Closed, the Open relay will take time to ‘drop-out’ and the Close relay will take time to ‘pull-in’ this time lapse is ~ 40ms. The time delay provided by the I.R.B. will protect the switches and gears from the controller’s instantaneous command signal reversal.

Current draws and field wirings are not affected by adding I.R.B.

S70 120VAC I.R.B., auxiliary switch, heater, and torque switch option are UL certified units.

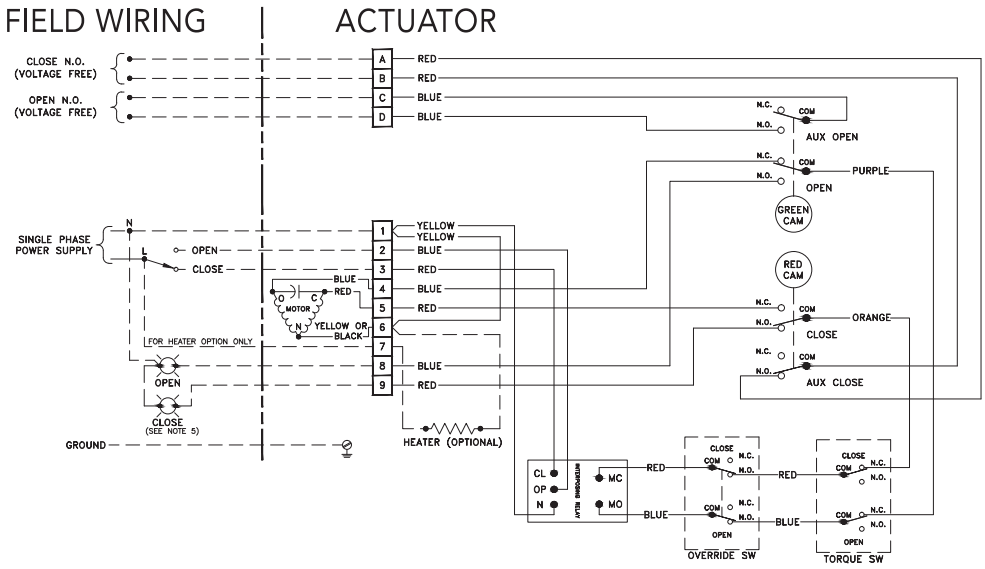

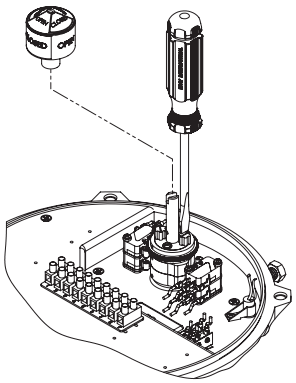

CLOSE TRAVEL SWITCH ADJUSTMENT

1. Loosen the mechanical stop for the closed position and back it off so that it does not interfere with actuator travel (closed stop located on right when viewed from travel stop side of actuator).
2. Remove the indicator rotor by pulling up it straight up away from the indicator shaft. This will expose the machined groove on the end of the cam shaft, which is the reference to the valve disc position.

NOTE: *For Housing Size 180, ignore steps 2 and 6. The valve position indicator plate on the lower gearbox is the reference to the valve position.*

3. Manually operate the actuator handwheel clockwise until the valve reaches the desired fully closed position.
4. Rotate the red adjusting knob by hand or with a flat head screwdriver until the cam lobe just activates (depresses) the switch from a clockwise direction.

NOTICE: *All continuous duty actuators have a cam locking screw. Cam locking screw must be slackened before cam adjustments and re-tightened after cam adjustments.*

NOTE: *It is possible that the rotation of one cam will move the other cam. If this occurs, hold the other knobs or cams during adjustment.*

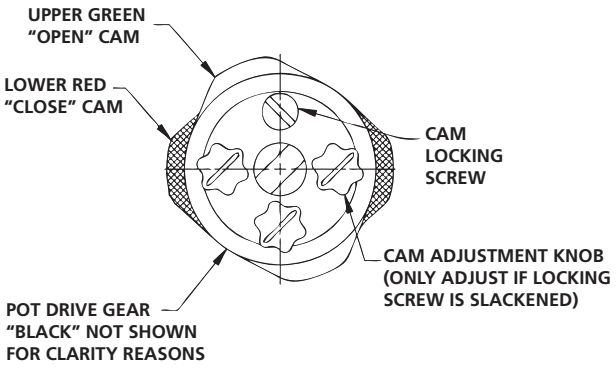

5. With the travel switch in the closed position, rotate the handwheel clockwise ½ turn for Housing Size 6, 1 turn for Housing Size 12, ½ turn for Housing Size 30, and 2 turns for Housing Size180. Adjust the closed travel stop bolt until it bottoms against the output gear and lock it in position with the locknut.
6. After all travel switch adjustments have been completed, replace the indicator rotor and secure the actuator cover.

OPEN TRAVEL SWITCH ADJUSTMENT

1. Loosen the mechanical stop for the open position and back it off, so that it does not interfere with actuator travel. The open stop is located on the left, when viewed from travel stop side of actuator.
2. Remove the indicator rotor by pulling it straight up away from the indicator shaft. This will expose the machined groove on the end of the cam shaft, which is the reference to the valve disc position.

NOTE: *For Housing Size180, ignore steps 2 and 6. The valve position indicator plate on the lower gearbox is the reference to the valve position.*

3. Manually operate the actuator handwheel counterclockwise until the valve reaches the desired open position.
4. Rotate the green adjusting knob until the cam lobe just activates (depresses) the switch from a counterclockwise direction.

NOTICE: *All continuous duty actuators have a cam locking screw. Cam locking screw must be slackened before cam adjustments and re-rightened after cam adjustments.*

NOTE: *It is possible that the rotation of one cam will move the other cam. If this occurs, hold the other knobs or cams during adjustment.*

5. With the travel switch in the open position, rotate the handwheel counterclockwise ½ turn for Housing Size 6, 1 turn for Housing Size 12, ½ turn for Housing Size 30, and 2 turns for Housing Size 180. Adjust the open travel stop bolt until it bottoms against the output gear and lock in position with the locknut.
6. After all travel stop adjustments have been completed, replace indicator rotor and secure the actuator cover.

DISASSEMBLY AND ASSEMBLY

Tools required:

See Appendix A for a complete list of basic tools.

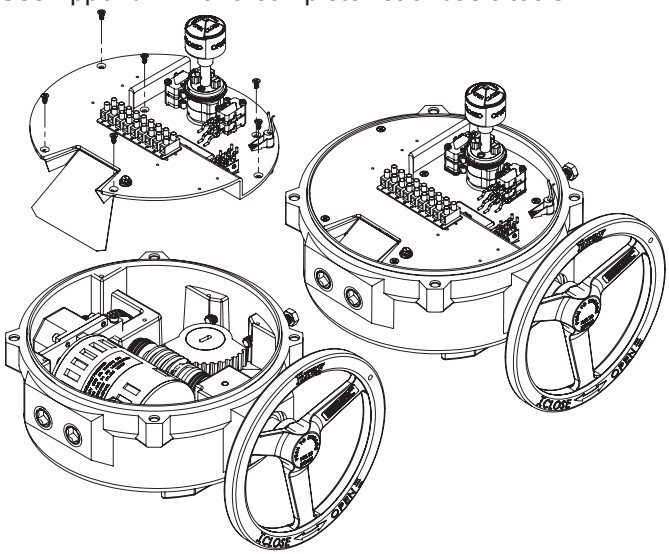

NOTE 1: *Assembly is the opposite of removal*

NOTE 2: *Pictures shown for Housing Size 6 are typical for all sizes*

PROCEDURE

WARNING

Turn off all power and lock out service panel before installing or modifying any electrical wiring.

1. Disconnect motor wires from the main terminal strip (motor neutral, open, and close).
2. Remove the switchplate by unscrewing the seven Phillips head mounting screws. The switchplate should lift out as an assembly with the camshaft attached.

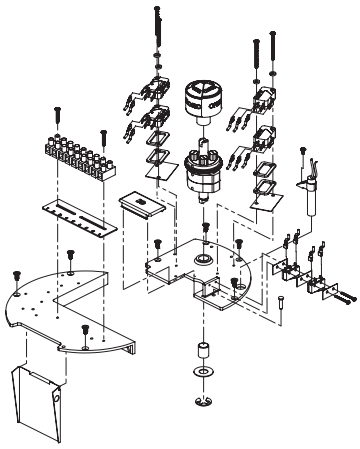

3. The switchplate can be independently disassembled.
4. To remove the Gearmotor, first disconnect the motor leads which run to the capacitor, and unscrew the mounting screws for Housing Size 6 (two lower, one upper) for other Housing Sizes (four lower, one upper). The motor can now be removed vertically out of the unit. **Note:** do not misplace the alignment pin.
5. To remove the worm shaft spur gear, remove the spring pin using a 3/32” punch, then slide the gear off the end of the worm shaft for Housing Sizes 6 and 12. Remove bowed E-clip retainer for Housing Size 30-180.
6. To remove the output drive worm gear, back off both mechanical travel stops. Remove the retaining ring and thrust washer, then lift the output drive worm gear out of its base.
7. The handwheel is held by a spring pin.

CAUTION

Further disassembly of the unit requires special tools and procedures, and thus will not be covered in this manual.

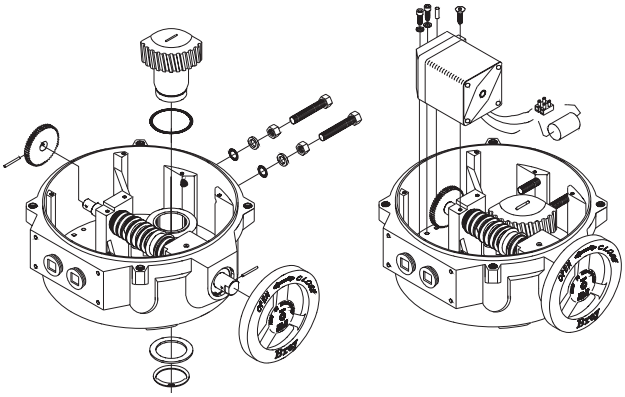

FIELD OR FACTORY INSTALLABLE OPTIONS

TORQUE SWITCHES

Torque switches are a factory installed and calibrated option available for all Series 70 units. Installation is simple, but due to the requirement for special calibration equipment, it is not recommended for field installation. In fact, modifying the factory torque setting voids the actuator warranty. Removal of the switchplate invalidates factory calibration

The unique mechanism is extremely accurate and has excellent repeatability. The worm is pinned to the worm shaft, which is held in position with a stack of disc springs at both ends. The torque transmitted through the worm to the output worm gear acts directly against the disc springs, which compress proportionately. The worm and worm shaft shift longitudinally as a result.

A specially designed drive lever and pin is incorporated into the worm, providing the profile for the torque switching mechanism. A drive lever & pin rides in the worm gear torque sensor groove, and in turn drives a cam. The cam then actuates its electrical switch, which interrupts the power to the motor winding when the torque exceeds the setting. The motor can still be powered to run in the opposite direction, the switch will release automatically.

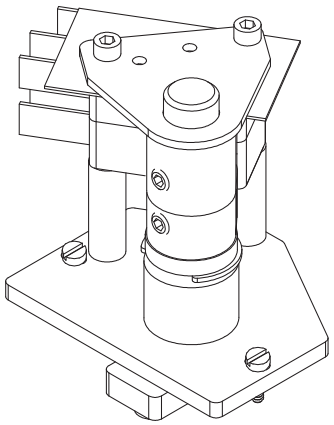

Switching Mechanism

TORQUE SWITCH MECHANISM

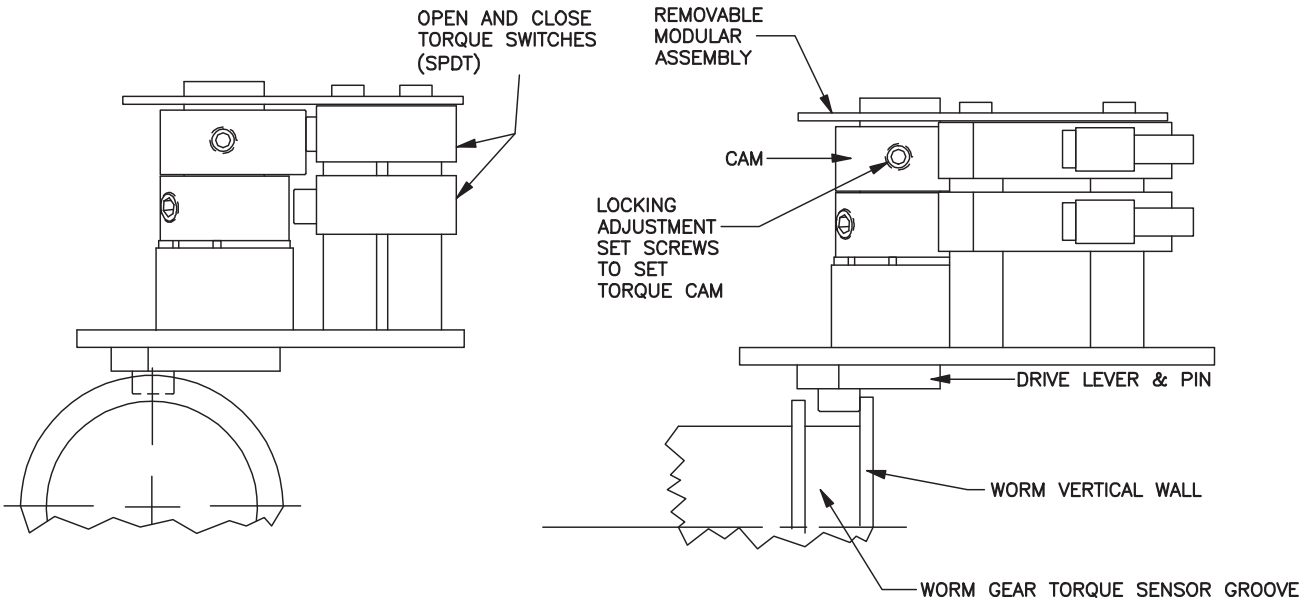

HEATER

To prevent condensation from forming inside the actuator, Bray offers an optional heater. The heater is a PTC (Positive Temperature Coefficient) style which has a unique temperature - resistance characteristic. The heater self-regulates by increasing its electrical resistance relative to its temperature. The heater does not require external thermostats or switches to control its heat output. It is constructed of a polycrystalline ceramic, sandwiched between two conductors, and wrapped inside a thermally conductive electrical insulator.

Connect the heater wires to the terminal strip as indicated on the wiring diagram.

NOTE: *The heater must have a constant power supply to be effective.*

WARNING

The heater surface can reach temperatures in excess of 200 degrees Celsius

Heater Kit Consists of:

1. Heater with flying leads
2. Heater Mounting Bracket
3. #10 pan head screw, Phillips drive

Tools required:

- For terminal wiring: Screwdriver, 3/16” tip flat blade
- For heater mounting screw: Screwdriver, No.1 Phillips

INSTALLATION PROCEDURE

The heater is mounted through a hole provided in the switchplate.

Before servicing unit, switch all power off at the service panel and lock the service disconnecting means to prevent power from being switched on accidentally. When the service disconnecting means cannot be locked, securely fasten a prominent warning device, such as a tag, to the service panel.

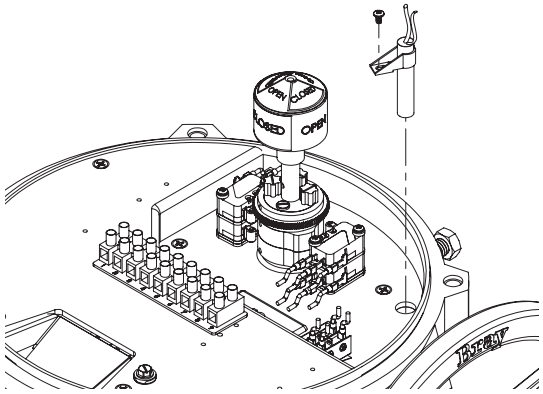

Disconnect all power to the unit.

1. Place the heater snugly into its mounting bracket until approx. 1/2 to 1” is left above the bracket as shown in diagram.
2. Slip the heater into its mounting hole.
3. Align the fastening hole in the bracket with the threaded screw hole in the plate. Fasten the heater to the switchplate.
4. Connect the heater wires to the terminal strip as indicated on the wiring diagram.

SERVO-PRO MODULE

Servo kits can be field installed on any continuous duty actuator (30, 60, or 110 sec. operation speed) to provide proportional positioning in response to a control signal. Intermittent duty actuators are not adaptable for servo control.

Servo Kit Consists of:

1. One servo module
2. Four #6 cross drive pan head screw (two for servo, two for feedback potentiometer)
3. One potentiometer assembly
4. Two #6 type A internal lockwashers (for pot)
5. One wiring diagram sticker for attaching to inside of actuator’s cover
6. One wiring diagram sticker for servo units with torque switches

Tools required:

- For actuator terminals wiring Screwdriver, 3/16” flatblade
- For servo terminals: Screwdriver, No.1 Phillips
- For servo and pot mounting screws: Screwdriver, No.2 Phillips

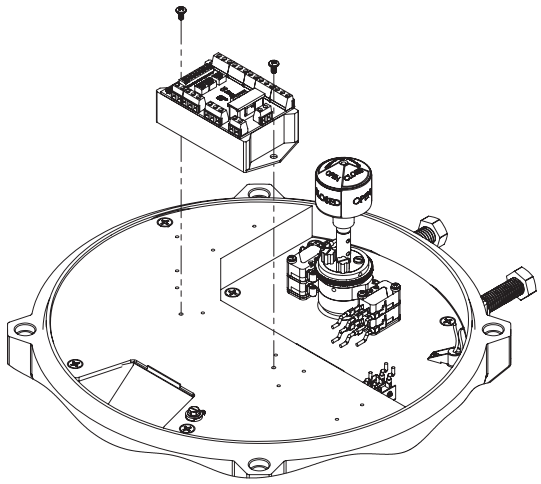

INSTALLATION PROCEDURE

- Disconnect all power to the unit.
- Remove the on/off duty, 9 point terminal strip and its marker

1. Disconnect all wiring to the terminal strip.
2. All wiring in the actuator is color coded to facilitate wiring, and does not need to be tagged or marked.
3. Field wiring should be marked if it is not already color coded.

Mount the servo module

4. Secure the servo card module onto switchplate with the 2X #6 screws.

Install the potentiometer assembly

5. The potentiometer installs next to the camshaft where there are two threaded holes provided.
6. The potentiometer assembly must be mounted in the correct orientation, with the actuator in its fully open (counter clockwise) position, the indicator shaft should be in-line with raised green rib on pot gear.
7. Push the assembly towards the cam to mesh the pot gears. Then tighten the mounting screws.

Note: *On Housing Size 180, the raised green rib on pot gear should be aligned with arrow on lower gear box's position indicator plate.*

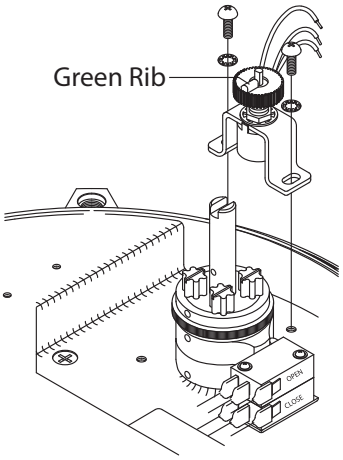

8. Rotate the actuator handwheel so that the red cam lobe is facing the body of the potentiometer. Make sure that the cam is not touching the potentiometer assembly. Readjust the assembly position if necessary.

Wire the potentiometer to the servo

9. Connect the potentiometer wires into the terminal strip on the servo module.
10. Wire according to the wiring diagram provided.

Wire the servo to the actuator

11. Wire according to the wiring diagram provided.
12. See the servo calibration instructions.

SERVO CALIBRATION

The calibration procedure defines the limits of operation of the Series 70 Actuator between the fully open valve position and the fully closed valve position. The cams on the Series 70 Actuator define the fully open and closed positions of the valve and may be set at any degree of opening. The only requirement is that the open cam limit setting must set at a higher degree of opening than the closed cam limit setting. In other words, the "Open" position must be more open than the "Closed" position.

Calibration is performed as follows:

1. Adjust the Open and Closed limit switch cams on the Series 70 Actuator to the desired position.
2. Engage the handwheel and move the Series 70 Actuator to its mid position.

NOTE: *An analog signal source is not required for calibration. Press and hold the "Calibrate" Set pushbutton for a minimum of 2 seconds. When the servo status LED begins to flag rapidly, release the button. The servo will now seek both travel limits and record these values to its nonvolatile memory. Following a successful calibration, the status LED will begin to flash a slow single green flash. If the calibration is unsuccessful, the status LED will alternately flash red and green. If this occurs, make sure the cams and the potentiometer are set correctly.*

This completes the "Self Calibration" procedure.

After completing the calibration procedure, it is good practice to apply the fully closed and fully open Command Signals, and verify that the S70 Actuator moves to the proper positions.

* Refer to Servo Pro Version 3.0 Operation & Maintenance Manual for more details

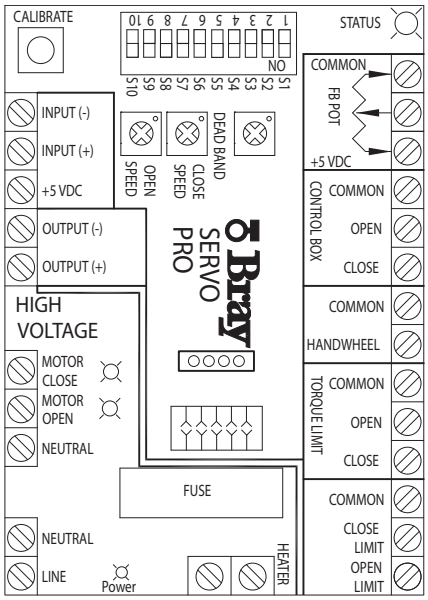

EXTERNAL SIGNAL FEEDBACK POTENTIOMETER

Potentiometers for external feedback can be field installed on all continuous duty actuators. Actuators which are not continuous duty do not have a pot gear fitted on their indicator shafts & must be fitted with a new shaft which has a pot drive gear for feedback pot (see Options: Auxiliary Switches).

Feedback Potentiometer Kit consists of:

- One potentiometer assembly
- Two #6 cross drive pan head screws
- Two #6 internal lockwashers
- One 4 point terminal strip
- One terminal strip marker for feedback pot
- One small wiring diagram sticker for the additional potentiometer

Tools Required:

- For terminal wiring Screwdriver, 3/16″ tip flat blade
- For pot mounting screws Screwdriver, No.2 Phillips

INSTALLATION PROCEDURE

1. The potentiometer installs next to the camshaft where there are two threaded holes provided for it.
2. The potentiometer assembly must be mounted in the correct orientation, with the actuator in its fully open (counter clockwise) position, the indicator shaft should be in-line with raised green rib on pot gear.

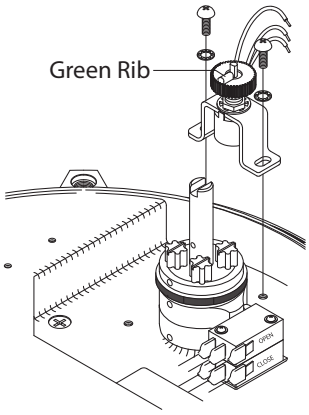

3. Push the assembly towards the cam to mesh the pot gears. Then tighten the mounting screws.
4. Rotate the actuator handwheel so that the red cam lobe is facing the body of the potentiometer. Make sure that the cam is not touching the potentiometer assembly. Readjust the assembly position if necessary.
5. Fit the 4 point terminal strip and marker in the kit. Before laying down the marker, cut it to obtain a marker as illustrated: opposite
6. Wire the pot to the terminal strip using the small stick-on wiring diagram provided.
7. Adhere the wiring diagram sticker to the inside of the cover.

SET THE POTENTIOMETER

1. Manually operate the actuator handwheel until the unit is in the fully closed position.
2. Rotate the black potentiometer drive gear adjustment knob, to engage the potentiometer gear at the closed position.
3. Manually operate the actuator to the fully open position.

AUXILIARY SWITCHES

Auxiliary switches are available, refer to chart on next page.

NOTES:

1. All auxiliary switches have voltage-free contacts.
2. Housing Sizes 6, 12, and 30 have double lobe cams. Housing Size 180 has single lobe cams.
3. Main limit switches are one OPEN and one CLOSE switch.
4. Auxiliary switches are one OPEN and one CLOSE switch, which are fixed to activate 3° before the main switches.
5. Adjustable auxiliary switches are adjustable to any position.

INSTALLATION PROCEDURE

1. Cut terminal strip marker to length needed with letters facing up.
2. Mount terminal strip and marker to switchplate using two #4-40 screws.

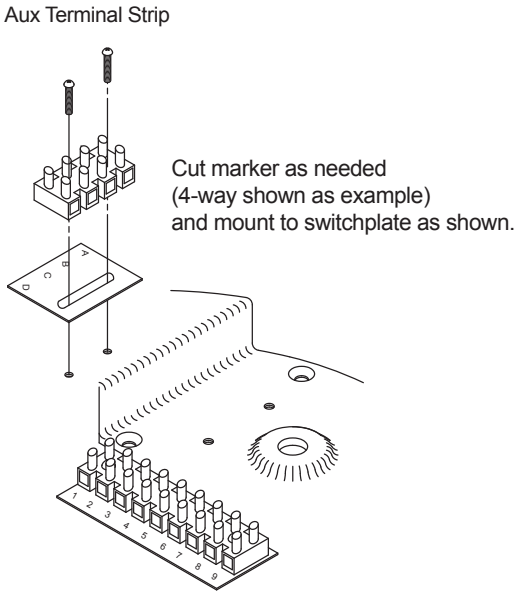

AUXILIARY SWITCH CONFIGURATION CHART

CONFIGURATION	HOUSING SIZE 6	HOUSING SIZES 12 & 30	HOUSING SIZE 180
1. ON/OFF (Intermittent Duty Motor) with Main Switches (Standard OPEN and CLOSE switches)	2 Switch 2 Cams Standard Assembly P/N	2 Switch 2 Cams Standard Assembly P/N	N/A
2. ON/OFF (Continuous Duty Motor) with Main Switches (Standard OPEN and CLOSE Switches	2 Switch 2 Cams & Pot Gear Standard Assembly P/N	2 Switch 2 Cams & Pot Gear Standard Assembly P/N	N/A
3. ON/OFF (Intermittent Duty Motor) with Main and 1 set of Auxiliary Switches	4 Switch 2 Cams Kit PN/ 70-0006-22980-536	4 Switch 2 Cams Kit PN/ 70-0012-22960-536	4 Switch 2 Cams & Pot Gear Standard Assembly P/N
4. ON/OFF (Continuous Duty Motor) with Main and 1 set of Auxiliary Switches	4 Switch 2 Cams & Pot Gear Kit P/N 70-0006-22980-536	4 Switch 2 Cams & Pot Gear Kit P/N 70-0012-22960-536	4 Switch 2 Cams & Pot Gear Standard Assembly P/N
5. ON/OFF with Main, 1 set of Auxiliary, and 1 Adjustable Auxiliary Switches	5 Switch 3 Cams Kit P/N 70-0006-22983-536	5 Switch 3 Cams Kit P/N 70-0012-22963-536	N/A
6. ON/OFF with Main, 1 set of Auxiliary, and 1 set of Adjustable Auxiliary Switches	6 Switch 3 Cams Kit P/N 70-0006-22984-536	6 Switch 3 Cams Kit P/N 70-0012-22964-536	N/A
7. ON/OFF with Main, 1 set of Auxiliary, and 2 adjustable Auxiliary Switches	For use with control station only. See Factory	6 Switch 4 Cams Kit P/N 70-0012-22961-536	6 Switch 4 Cams & Pot Gear
8. ON/OFF with Main, 1 set of Auxiliary, and 2 sets of adjustable Auxiliary Switches	N/A	8 Switch 4 Cams Kit P/N 70-0012-22962-536	N/A
9. Servo with Main, 1 set of Auxiliary, and 1 adjustable Auxiliary Switches	N/A	5 Switch 3 Cams & 1 Pot Gear Kit P/N 70-0012-22966-536	5 Switch 3 Cams & 1 Pot Gear
10. Servo with Main, 1 set of Auxiliary, and 2 Adjustable Auxiliary Switches	N/A	N/A	6 Switch 4 Cams & Pot Gear
11. ON/OFF with Main and 1 Adjustable Auxiliary Switch	3 Switches 3 Cams Kit P/N 70-0006-22988-536	3 Switch 3 Cams Kit P/N 70-0012-22968-536	N/A
12. Servo with Main and 1 Adjustable Auxiliary Switch	N/A	3 Switch 3 Cams & 1 Pot Gear Kit P/N 70-0012-22971-536	N/A

TYPICAL WIRING DIAGRAM: ON/OFF SERVICE

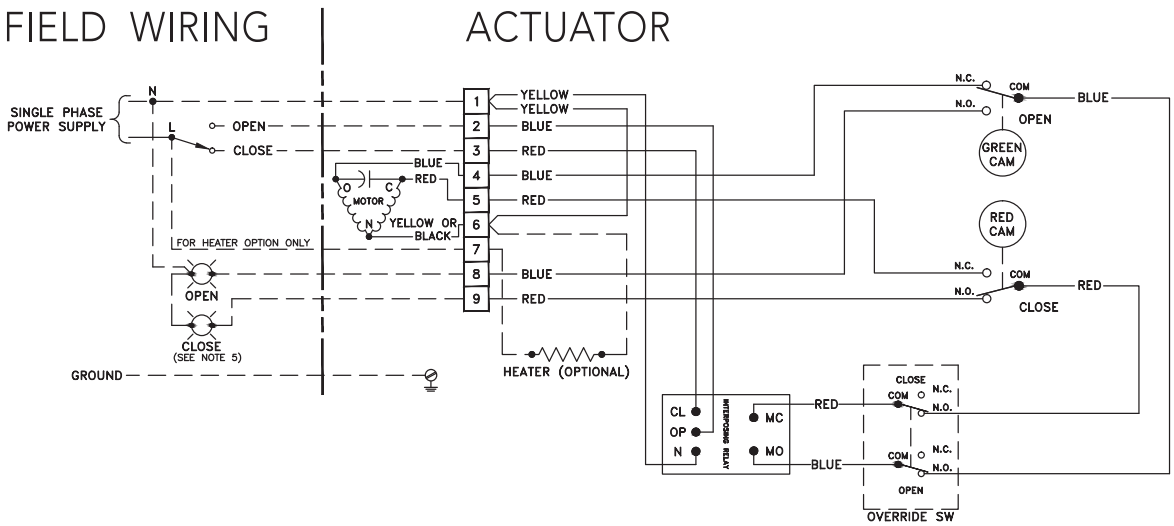

Wiring diagram for basic unit with Form-C (SPDT) travel limit switches, I.R.B., and double override switches. (Drawn for actuator in its fully closed condition.)

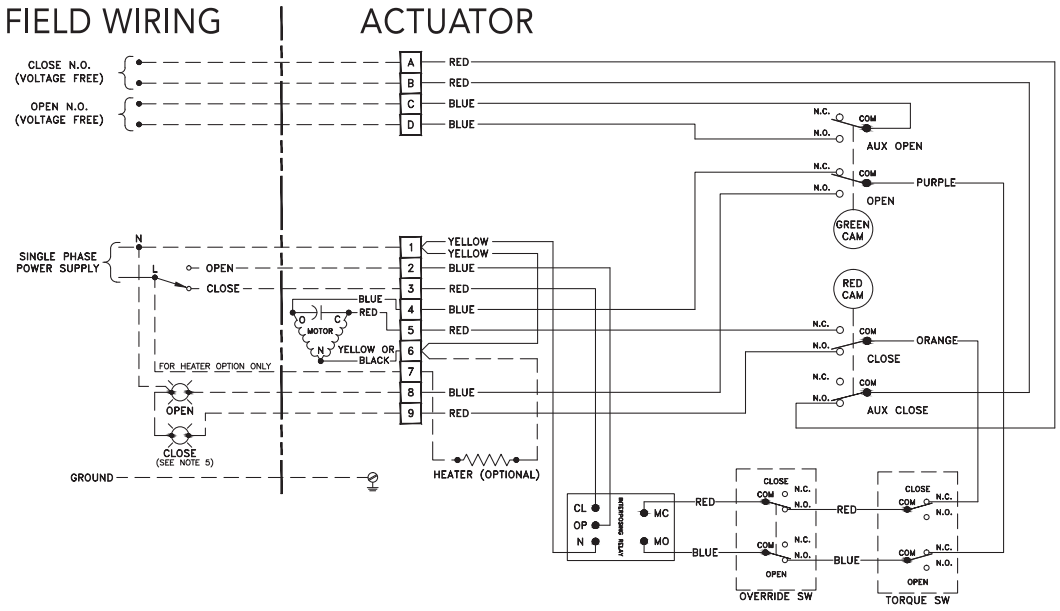

Wiring diagram for unit with Form-C (SPDT) travel limit switches, “Voltage Free” Auxiliary open/close switches, I.R.B., double override switches and torque switches. (Drawn for actuator in its fully closed condition.)

Actuator Form-C Switches, SPDT

Housing Size: 6
V3-Sw

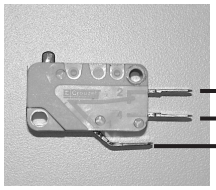

Housing Size:12, 30 & 180
V3-Sw with Lever

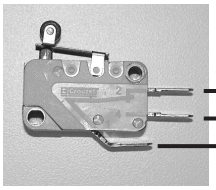

TYPICAL WIRING DIAGRAM: MODULATING SERVICE

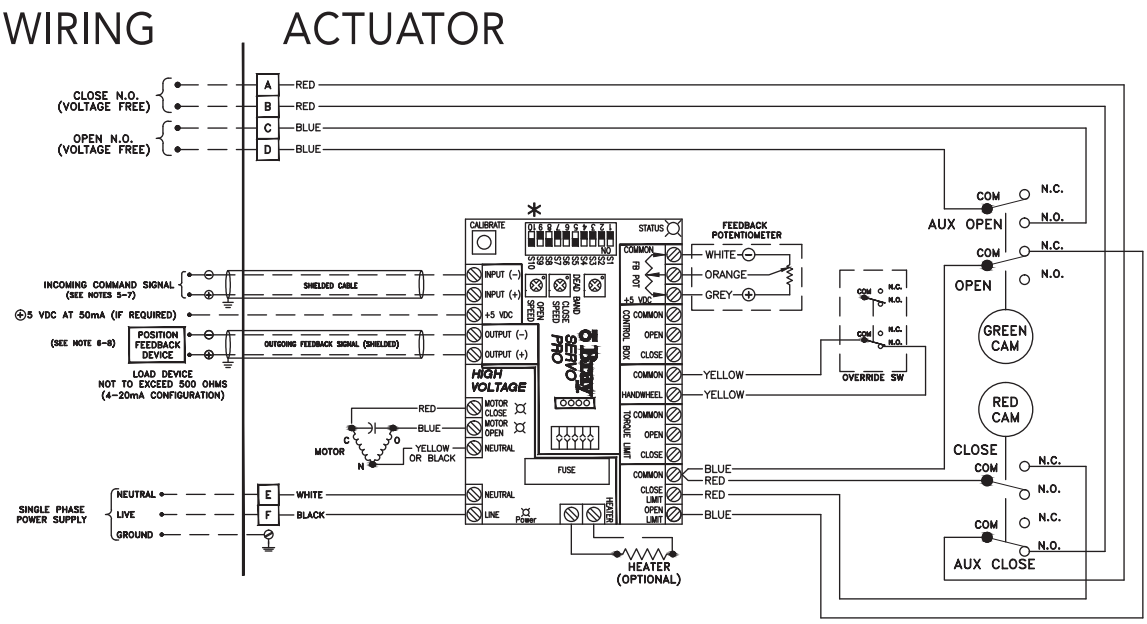

Wiring diagram for unit with Form-C (SPDT) travel limit switches, “Voltage Free” Auxiliary open/close switches, Servo and double override switches. (Drawn for actuator in its full closed position.)

Warning: Turn ALL Power Off prior to adjusting DIP switches.

SWITCH	COMMAND INPUT			
	4-20 mA DC	**0-5 VDC ***	**0-10 VDC**	**2-10 VDC**
1	Off	On	On	On
2	Off	Off	On	On
3	Off	Off	Off	On
	OUTPUT			
	4-20 mA DC	**0-5 VDC**	**0-10 VDC**	**2-10 VDC**
4	Off	On	On	N/A
5	On	Off	Off	N/A
6	Off	On	Off	N/A
	Forward Acting	**Reverse Acting**		
7	Off	On		
	Fail in Last Position	**Fail Enable ****		
8	Off	On		
	Fail Close	**Fail Open**		
9	Off	On		
	Torque Switch Enable	**Torque Switch Disable**		
10	Off	On		

*To control servo with a remote potentiometer, set the Command Input to 0-5VDC (see Command Signal Connector section; page 8 Servo Pro Manual).

**Fail position is the position that the servo will travel to when the control signal is removed. It does not apply to 0-5VDC or 0-10VDC Command Signals.

ADJUSTMENTS, CALIBRATION AND STATUS LED OF SERVO PRO

A. Adjust the open and close speed of your actuator (The fastest closing speed of your actuator is printed on the label of the unit):

1. Use the Close Speed trim pot to adjust the closing speed of your actuator (pot in the fully CCW position equals fastest close speed).
2. Use the Open Speed trim pot to adjust the opening speed of your actuator (pot in the fully CCW position equals fastest open speed).

B. Calibrate the Servo:

1. Manually position your actuator somewhere in mid position; away from the travel limits.
2. Disengage your handwheel (push it back in towards the actuator), hold down the Calibration push button for two seconds and release, the servo will begin to drive the actuator in the close direction and then in the open direction in order to save these limits to memory.
3. Following a successful calibration the servo's Status LED will begin to flash the normal operation code, an unsuccessful calibration will yield a Red-Green-Red-Green flash immediately following the attempted calibration (for more information on the Status LED flash codes see the Status LED Flash Code Table).

Status LED

The "Status LED" is a bi-color LED which provides detailed information regarding the operation of the S70 Servo Pro. Table 2 below illustrates the different combinations of LED flash codes and their corresponding conditions. Following the table is a more descriptive explanation of the Flash Code. Whenever the LED is flashing green, regardless of the flash code, the servo will operate, but not necessarily optimally. Whenever the LED flash codes are RED, the servo will not operate. An example is an engaged handwheel, the Status LED will flash a single red flash code and will not operate.

Table 2: Status LED Flash Codes

Green Status LED warning and information Flash Codes:

#	Indication	Reason	Solution
1	Steady Green Flash	Normal Operation	Servo Functioning Ok
2	2 Green Flashes	Calibration Defaults Loaded	Adjust travel limits, push autocalibration PB
3	3 Green Flashes	Reverse Acting Mode	If you would like your servo to not operate in reverse acting mode, set DIP switch 7 accordingly
4	4 Green Flashes	2-10VDC Input Command Signal Selected	If you require a different configuration, set DIP switches 1, 2, and 3 accordingly
5	1 Red Flashes	Handwheel engaged	Push the Handwheel in towards the actuator
6	2 Red Flashes	Command Signal Failure	Set DIP switches accordingly, send servo appropriate signal
7	3 Red Flashes	Feedback Pot Fault	Position the feedback Pot correctly, see Feedback Pot calibration
8	4 Red Flashes	Limit Switch Fault	Check wiring of limit switches, ensure that both switches are not tripped simultaneously
9	5 Red Flashes	Torque Switch Fault	Ensure that DIP switch 10 is positioned correct, check wiring of torque switches, reverse direction of actuator, correct over torque condition
10	6 Red Flashes	Feedback Pot Wired In Reverse	Correctly wire the Feedback Pot

Note: *A flashing green LED provides status and warning information. The servo will operate normally in this state. Some flash codes indicate a warning, where the servo has recovered automatically such as the detection of an invalid calibration. In this case, a default calibration is automatically loaded that will allow the Servo to operate, but may not be a perfect match to the actuator. The servo should be re-calibrated as soon as possible.*

RECEPTACLES (QUICK CONNECTORS)

Unless otherwise specified, power receptacles will be 5-pin mini style standard duty with a black anodized aluminum finish. They conform to ANSI B93.55M except in wire color. Euro receptacles will be used for low power instrument and signal cable since they can be supplied shielded. Wiring diagrams for plug-in receptacles for either the Bray Series 70 or the local control station will be provided as a separate diagram. Units ordered with pin connector receptacles factory installed are wired and tested. Cordsets which fit these receptacles may be ordered in several lengths.

Receptacle Kit consists of:

1. Receptacle(s), male pin and male thread 1/2”-NPT, in the quantity, style, and number of pins ordered
2. Reducing bushing 3/4” to 1/2” NPT for installation in Housing Sizes 12 - 180 and control stations
3. Wiring diagram (SK-# below)

Tools required:

- For terminal wiring: Screwdriver, 3/16” tip flat blade
- For Mini or Euro receptacle: Wrench, 1”

Installation procedure:

1. Screw the receptacle into the actuator conduit entry using Teflon tape or similar.
2. Wire to the terminal strip according to the wiring diagram or the field wiring requirements.

Wiring Schematic for Optional Pin Connector Receptacles

REQUIREMENTS				RECEPTACLES REQ’D		NO L.C.S.[1] DIAGRAM	WITH L.C.S.[1] DIAGRAM
ON - OFF UNITS (INTERMITTENT OR CONTINUOUS)							
POWER				ONE MINI		SK-960517	SK-960515
POWER		POSITION INDICATION[2]		ONE MINI	ONE EURO	SK-960717	SK-960513
POWER		POSITION INDICATION[3]		ONE MINI	ONE EURO	SK-960516	SK-960716[5]
POWER			FEEDBACK POTENTIOMETER	ONE MINI	ONE EURO	SK-960718	SK-960720
POWER		POSITION INDICATION[3]	FEEDBACK POTENTIOMETER	ONE MINI	6-PIN EURO[4]	SK-960719	N/A

Custom configurations are possible - consult the factory.

[1] L.C.S.: Local Control Station , WHICH implies mounted to the actuator

[2] Travel indication is wired to the supply voltage

[3] Travel indication wiring is voltage free

[4] A 6-pin EURO connector is required for this application, consult factory for price and availability.

[5] The Local Control Station comes standard with 120 Volt lamp bulbs, for other voltages consult factory.

Note: *the Control Station lights must be wired to the same voltage as the remote end of travel indication.*

Euro receptacles use 22 AWG wire rated at 250V, 4 Amp. Pin configuration interfaces with European standards.

Mini receptacles use 18 AWG wire rated at 300 V, 9 Amp. Pin configuration conforms to ANSI B93.55M.

*** For requirements beyond these ratings consult the factory.**

SPINNER

A spinner is available to ease and speed the manual override of the Bray Series 70 actuator. The Housing Size 6 units mount the spinner on a lever which screws onto the back of the handwheel. The Housing Size 12-180 units mount the spinner on the rim of the handwheel. Note that care should be exercised in the use of spinner equipped handwheels. Rapid operation of the handwheel to close the valve may cause water hammer. Also, rapid travel into a travel stop may cause damage.

Spinner Kit Consists of:	
For Housing Size 6	**For Housing Sizes 12-180**
Spinner and lever assembly	Spinner handle
Flat head socket cap screw, #10-32UNF x 3/8	Socket head shoulder bolt, 1/4-20UNC x .75

Tools required:

- For socket head shoulder bolt and flat head capscrew
- Hex key, 1/8” for Housing Size 6
- Hex key, 3/16” for Housing Sizes 12-180

Installation procedure:

- For Housing Size 6 units simply position the lever onto the back of the handwheel then screw the flat head cap screw in to place from behind.

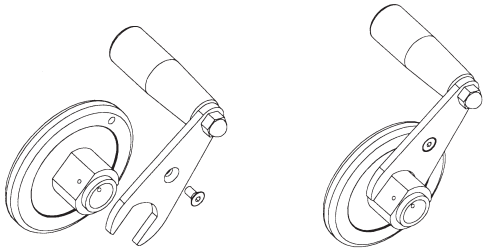

- For Housing Size 12-180 units, put the socket head shoulder bolt through the spinner handle and screw it firmly into the handwheel rim.

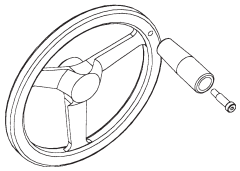

LOCAL CONTROL STATION (SINGLE PHASE POWERED ACTUATORS)

Bray’s local control station gives the user the ability to locally override the actuator electrically. The station is open / stop / close operation in the local control mode. Red and green end of travel indication lights are also provided. Depending on how it is wired the control station can be used on the on - off units and the servo controlled modulating units. Optional key operated locking switches are available.

Note: *The control station used with On - Off S70 and that used with modulating S70 have different contact blocks internally, the correct part number must be used to ensure you order the correct unit (see price sheet).*

Local Control Station Kit consists of:

1. Local control station assembly
2. Four socket head cap screws, #10-24UNC x 4.50 long, for mounting the station to the actuator
3. A gasket for sealing the station to the actuator
4. Wiring diagram

Tools required:

- For tapping control station mounting holes on actuator, #10-24UNC Tap.
- For wiring Screwdriver, 3/16” flat blade.
- For mounting and cover screws Hex key, 5/32”

Installation procedure:

1. Tap #10-24UNC holes using the cored holes on the side of actuator.
2. Adhere the gasket to the control box.
3. Mount the control box to the actuator using the 4 long socket head capscrews.

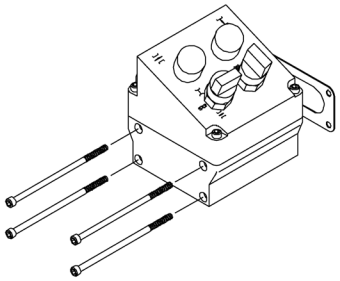

4. Wire the control box to the actuator in accordance to the wiring diagram provided. The local control station contains no terminal strips, and all wiring is direct to the switches and lights via 2” x 3/4” NPT holes in bottom of housing. Ordering the control station with optional pin connector receptacles will eliminate the necessity of field wiring. The units will be completely factory wired and tested.

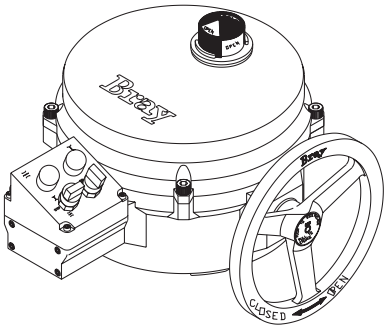

Note: *The inclined cover of the local control station can be mounted in any of its four symmetrical positions. If field wiring is required, first mount the base to the actuator, then remove the cover to gain access for wiring.*

**Local Control Station requires a dedicated set of auxiliary switches for control station use only. Two additional adjustable auxiliary switches are needed for remote indication of open/close position in ON/OFF configurations*

APPENDIX A

BASIC TOOLS

Common To All Units	
Terminal connections, cam adjustment	Screwdriver, 1/4" tip flat tip blade
All switches, terminal strip, torque switch plate	Screwdriver, No.1 Phillips
Switchplate screws, capacitor	Screwdriver, No. 2 Phillips
Servo trimmer pots	Screwdriver, 1/8" flat tip for trim pots
Housing Size 6	
Mounting nuts	Wrench, 1/2 "
Cover captivated capscrews	Hex key, 1/4"
Travel stop adjusting bolts	Wrench, 7/16"
Travel stop jam nuts	Wrench, 7/16"
Motor mount socket flat head capscrew	Hex key, 3/32"
Motor mount socket head capscrew	Hex key, 9/64"
Conduit Entry Plug	Hex key, 3/8"
Housing Size 12	
Mounting nuts (small pattern)	Wrench, 1/2"
Mounting nuts (large pattern)	Wrench, 3/4"
Cover captivated capscrews	Hex key, 5/16"
Travel stop adjusting bolts	Wrench, 9/16"
Travel stop nuts	Wrench, 9/16"
Motor mount socket head capscrew	Hex key, 5/32"
Conduit Entry Plug	Hex key, 9/16"
Housing Size 30	
Mounting nuts, travel stop jam nuts	Wrench, 3/4"
Cover captivated capscrews	Hex key, 3/8"
Travel stop adjusting studs	Wrench, 3/4"
Motor mount socket head shoulder bolt	Hex key, 5/32"
Motor mount socket head cap screws	Hex key, 3/16"
Conduit Entry Plug	Hex key, 9/16"
Housing Size 180	
Mounting nuts, travel stop jam nuts	Wrench, 3/4"
Cover captivated capscrews	Hex key, 3/8"
Travel stop adjusting studs	Wrench, 5/16"
Motor mount socket head shoulder bolt	Hex key, 5/32"
Motor mount socket head cap screws	Hex key, 3/16"
Conduit Entry Plug	Hex key, 9/16"

APPENDIX B

ACTUATOR TROUBLESHOOTING CHART

Problem	Possible Cause	Solutions
Actuator does not operate	Override is engaged	Push handwheel in all the way
	Wiring is incorrect	Check wiring and power supply
	Actuator motor has reached its thermal shutdown temperature	Allow time to cool
Actuator operates in reverse directions	Field wiring is reversed	Rewire field wiring
Actuator does not fully close valve (or open valve)	Limit switches are depressed	Readjust travel limit switches
	Mechanical travel stop is stopping actuator	Adjust mechanical travel stops
	Valve torque requirement is higher than actuator output	Manually override out of seat, try angle seating or larger actuator
	Optional torque switches are activating	Valve torque exceeds actuator torque rating - consult factory
	Voltage power supply is low	Check power source.
Engaging override handwheel does not shut off motor	Override pin is corroded or damaged	Clean and check for smooth operation of the override switch pin
	Override switch is damaged	Replace switch
Disengaging override hand-wheel does not restart motor	Not completely disengaged	Push handwheel in as far as possible (no yellow showing)
	Override pin is damaged or and does not activate switch	Replace override pin
	Incorrect wiring of override switch	Check wiring
Motor runs but worm and gear segment do not	Worm gear segment is not meshing with worm	Remove switchplate and inspect, adjust travel stops to prevent gear disengaging
	Pin/Key on Worm/Motor drive gear sheared	Replace Pin/Key on drive gear
Corrosion inside unit	Condensation forming	Test heater wiring, should have constant power
	Water leaking in	Check all seals and possible water entry through conduit

S70 SERVO PRO TROUBLESHOOTING CHART

Refer to the Servo Pro Operation Manual for more information.

Problem	Possible Cause	Solutions
Actuator moves back and forth near setpoint (hunts)	Signal is fluctuating beyond deadband setting	Increase the deadband using the Deadband trim pot.
	Signal has interference	Shield signal from interference
Actuator does not travel fully open or fully closed	Travel limit switches are not set correctly	Set travel limit switches for 90° operation
	Servo DIP switches are not set correctly	See Quick Setup Instructions on page 5
	Mechanical travel stops are not set correctly	Set mechanical travel stops for 90° operation
Actuator motor does not run and green servo power light is off	Power is disconnected	Connect power
Actuator motor does not run and green servo power light is on	Limit switches or torque switches are triggered	Ensure that there is continuity between the two wires going to each switch
	Handwheel is engaged	Push handwheel in (disengage)
	Servo is not wired correctly	Check servo wiring to all points
	Motor has thermally tripped	Allow motor to cool down
Actuator does not properly respond to command signal	Potentiometer gear is not engaged	Engage and adjust pot. gear
	Command signal DIP switch selection is not correct	Set the DIP switches correctly
	Command signal polarity is incorrect	Wire the command signal correctly
Actuator runs in one direction only	Wiring is incorrect	Correct Wiring
	Potentiometer wired backwards	Reverse white and gray wires, see wiring diagram inside cover
	Limit switch or torque switch is triggered	Ensure that there is continuity between the wires coming from the switches. If your actuator has reached its travel limit, reverse direction. If one of your torque switches has tripped, reverse the actuator direction and correct the over torque condition.
	Command signal DIP switch selection is not correct	Set the DIP switches correctly

APPENDIX C - EXPLODED VIEWS

SERIES 70 - HOUSING SIZE 6

ON / OFF

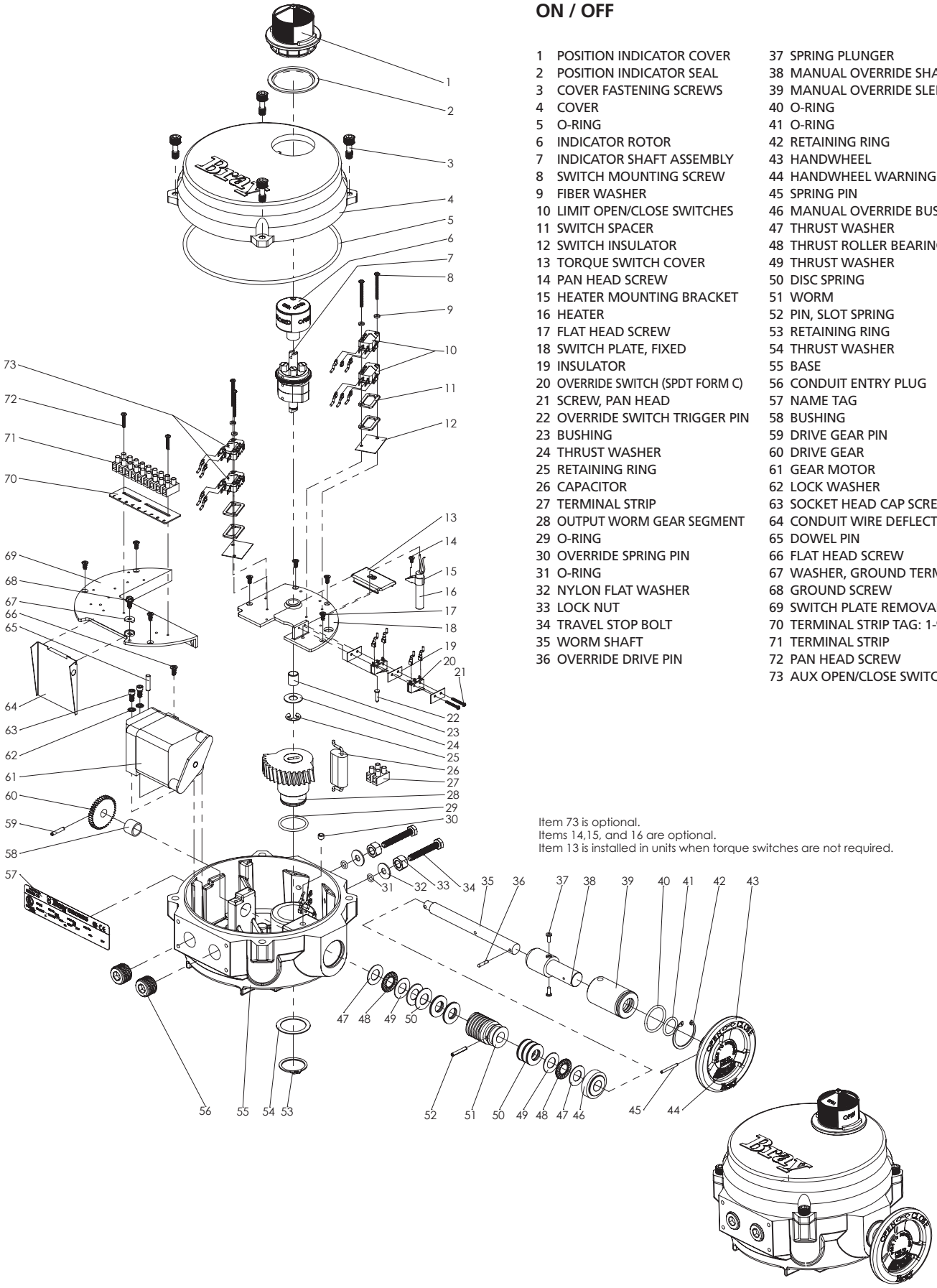

1 POSITION INDICATOR COVER
2 POSITION INDICATOR SEAL
3 COVER FASTENING SCREWS
4 COVER
5 O-RING
6 INDICATOR ROTOR
7 INDICATOR SHAFT ASSEMBLY
8 SWITCH MOUNTING SCREW
9 FIBER WASHER
10 LIMIT OPEN/CLOSE SWITCHES
11 SWITCH SPACER
12 SWITCH INSULATOR
13 TORQUE SWITCH COVER
14 PAN HEAD SCREW
15 HEATER MOUNTING BRACKET
16 HEATER
17 FLAT HEAD SCREW
18 SWITCH PLATE, FIXED
19 INSULATOR
20 OVERRIDE SWITCH (SPDT FORM C)
21 SCREW, PAN HEAD
22 OVERRIDE SWITCH TRIGGER PIN
23 BUSHING
24 THRUST WASHER
25 RETAINING RING
26 CAPACITOR
27 TERMINAL STRIP
28 OUTPUT WORM GEAR SEGMENT
29 O-RING
30 OVERRIDE SPRING PIN
31 O-RING
32 NYLON FLAT WASHER
33 LOCK NUT
34 TRAVEL STOP BOLT
35 WORM SHAFT
36 OVERRIDE DRIVE PIN
37 SPRING PLUNGER
38 MANUAL OVERRIDE SHAFT
39 MANUAL OVERRIDE SLEEVE
40 O-RING
41 O-RING
42 RETAINING RING
43 HANDWHEEL
44 HANDWHEEL WARNING LABEL
45 SPRING PIN
46 MANUAL OVERRIDE BUSHING
47 THRUST WASHER
48 THRUST ROLLER BEARING
49 THRUST WASHER
50 DISC SPRING
51 WORM
52 PIN, SLOT SPRING
53 RETAINING RING
54 THRUST WASHER
55 BASE
56 CONDUIT ENTRY PLUG
57 NAME TAG
58 BUSHING
59 DRIVE GEAR PIN
60 DRIVE GEAR
61 GEAR MOTOR
62 LOCK WASHER
63 SOCKET HEAD CAP SCREW
64 CONDUIT WIRE DEFLECTOR
65 DOWEL PIN
66 FLAT HEAD SCREW
67 WASHER, GROUND TERMINAL
68 GROUND SCREW
69 SWITCH PLATE REMOVABLE
70 TERMINAL STRIP TAG: 1-9
71 TERMINAL STRIP
72 PAN HEAD SCREW
73 AUX OPEN/CLOSE SWITCHES

Item 73 is optional.
Items 14,15, and 16 are optional.
Item 13 is installed in units when torque switches are not required.

SERIES 70 - HOUSING SIZE 12

ON / OFF

1	POSITION INDICATOR COVER	37	O-RING
2	POSITION INDICATOR SEAL	38	O-RING
3	COVER FASTENING SCREW	39	RETAINING RING
4	COVER	40	HANDWHEEL WARNING LABEL
5	O-RING	41	HANDWHEEL
6	INDICATOR ROTOR	42	SPRING PIN
7	CAM ASSEMBLY	43	MANUAL OVERRIDE BUSHING
8	SWITCH MOUNTING SCREW	44	THRUST WASHER
9	FIBER WASHER	45	THRUST ROLLER BEARING
10	LIMIT OPEN/CLOSE SWITCHES	46	THRUST WASHER
11	SWITCH SPACER	47	DISC SPRING
12	TORQUE SWITCH COVER	48	WORM
13	PAN HEAD SCREW	49	WORM GEAR ROLL PIN
14	HEATER MOUNTING BRACKET	50	RETAINING RING
15	HEATER	51	THRUST WASHER
16	OVERRIDE SWITCH (SPDT FORM C)	52	BASE
17	INSULATOR	53	CONDUIT ENTRY PLUG
18	SCREW, PAN HEAD	54	NAME TAG
19	OVERRIDE SWITCH TRIGGER PIN	55	BUSHING-DRIVE GEAR
20	BUSHING	56	GEAR SPACER
21	THRUST WASHER	57	PIN, SLOT SPRING
22	RETAINING RING	58	RETAINING RING
23	OUTPUT WORM GEAR SEGMENT	59	DRIVE GEAR
24	O-RING	60	GEAR MOTOR
25	TERMINAL STRIP	61	LOCK WASHER
26	CAPACITOR	62	DOWEL PIN
27	OVERRIDE SPRING PIN	63	SOCKET HEAD CAP SCREW
28	O-RING	64	CONDUIT WIRE DEFLECTOR
29	NYLON FLAT WASHER	65	WASHER, GROUND TERMINAL
30	LOCK NUT	66	GROUND SCREW
31	TRAVEL STOP BOLT	67	FLAT HEAD SCREW
32	WORM SHAFT	68	SWITCH PLATE
33	OVERRIDE DRIVE PIN	69	TERMINAL STRIP TAG: 1-9
34	SPRING PLUNGER	70	TERMINAL STRIP
35	MANUAL OVERRIDE SHAFT	71	PAN HEAD SCREW
36	MANUAL OVERRIDE SLEEVE	72	AUX OPEN/CLOSE SWITCHES

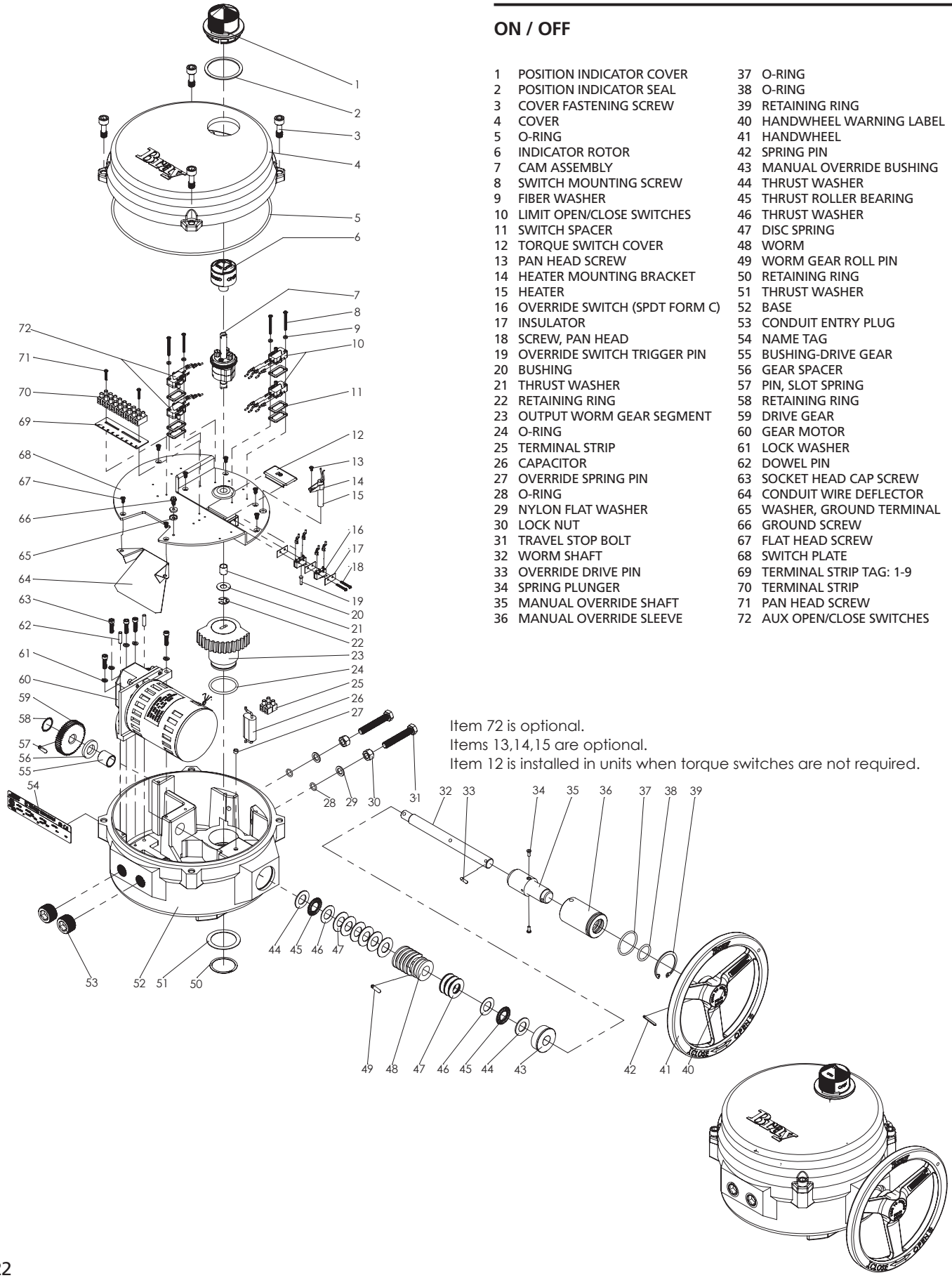

SERIES 70 - HOUSING SIZE 30

ON / OFF

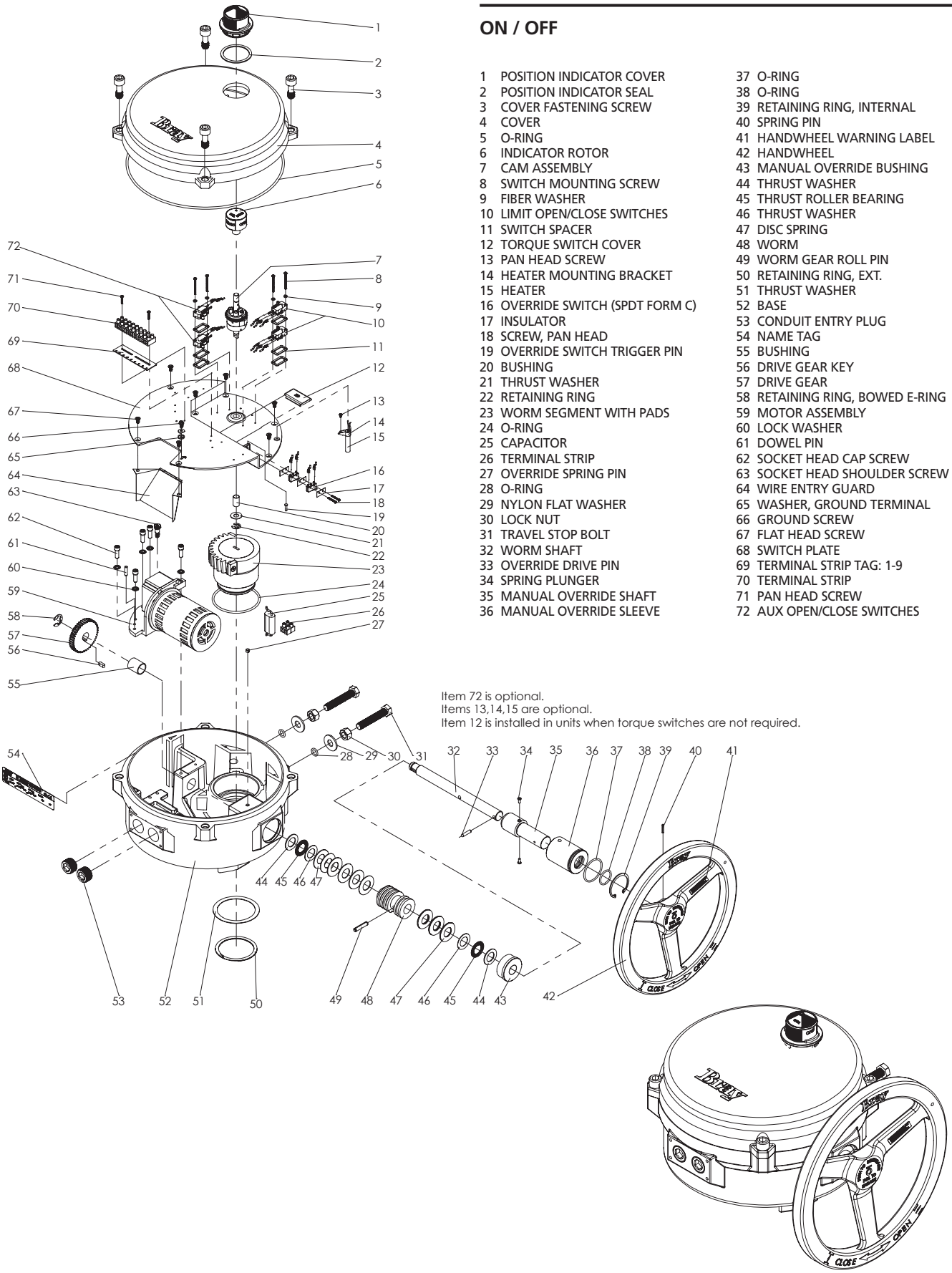

1 POSITION INDICATOR COVER
2 POSITION INDICATOR SEAL
3 COVER FASTENING SCREW
4 COVER
5 O-RING
6 INDICATOR ROTOR
7 CAM ASSEMBLY
8 SWITCH MOUNTING SCREW
9 FIBER WASHER
10 LIMIT OPEN/CLOSE SWITCHES
11 SWITCH SPACER
12 TORQUE SWITCH COVER
13 PAN HEAD SCREW
14 HEATER MOUNTING BRACKET
15 HEATER
16 OVERRIDE SWITCH (SPDT FORM C)
17 INSULATOR
18 SCREW, PAN HEAD
19 OVERRIDE SWITCH TRIGGER PIN
20 BUSHING
21 THRUST WASHER
22 RETAINING RING
23 WORM SEGMENT WITH PADS
24 O-RING
25 CAPACITOR
26 TERMINAL STRIP
27 OVERRIDE SPRING PIN
28 O-RING
29 NYLON FLAT WASHER
30 LOCK NUT
31 TRAVEL STOP BOLT
32 WORM SHAFT
33 OVERRIDE DRIVE PIN
34 SPRING PLUNGER
35 MANUAL OVERRIDE SHAFT
36 MANUAL OVERRIDE SLEEVE
37 O-RING
38 O-RING
39 RETAINING RING, INTERNAL
40 SPRING PIN
41 HANDWHEEL WARNING LABEL
42 HANDWHEEL
43 MANUAL OVERRIDE BUSHING
44 THRUST WASHER
45 THRUST ROLLER BEARING
46 THRUST WASHER
47 DISC SPRING
48 WORM
49 WORM GEAR ROLL PIN
50 RETAINING RING, EXT.
51 THRUST WASHER
52 BASE
53 CONDUIT ENTRY PLUG
54 NAME TAG
55 BUSHING
56 DRIVE GEAR KEY
57 DRIVE GEAR
58 RETAINING RING, BOWED E-RING
59 MOTOR ASSEMBLY
60 LOCK WASHER
61 DOWEL PIN
62 SOCKET HEAD CAP SCREW
63 SOCKET HEAD SHOULDER SCREW
64 WIRE ENTRY GUARD
65 WASHER, GROUND TERMINAL
66 GROUND SCREW
67 FLAT HEAD SCREW
68 SWITCH PLATE
69 TERMINAL STRIP TAG: 1-9
70 TERMINAL STRIP
71 PAN HEAD SCREW
72 AUX OPEN/CLOSE SWITCHES

Item 72 is optional.
Items 13,14,15 are optional.
Item 12 is installed in units when torque switches are not required.

SERIES 70 - HOUSING SIZE 180 FOR 3:1 GEAR BOX

ON / OFF

1 COVER FASTENING SCREW
2 COVER
3 O-RING
4 BUSHING
5 CAM ASSEMBLY
6 SWITCH MOUNTING SCREW (1.375)
7 FLAT INSULATION WASHER
8 OPEN SWITCH ASSEMBLY
9 SWITCH SPACER
10 TORQUE SWITCH ASSEMBLY
11 PAN HEAD SCREW
12 HEATER MOUNTING BRACKET
13 HEATER
14 INSULATOR
15 OVERRIDE SWITCH (SPDT FORM C)
16 SCREW, PAN HEAD
17 OVERRIDE SWITCH TRIGGER PIN
18 THRUST WASHER
19 RETAINING RING
20 OUTPUT WORM GEAR SEGMENT
21 O-RING
22 CAPACITOR
23 TERMINAL STRIP
24 OVERRIDE DRIVE PIN
25 SET SCREW, SOC. HD. CAP.
26 WORM SHAFT
27 OVERRIDE DRIVE PIN
28 SPRING PLUNGER
29 MANUAL OVERRIDE SHAFT
30 MANUAL OVERRIDE SLEEVE
31 O-RING
32 O-RING
33 RETAINING RING, INTERNAL
34 HANDWHEEL WARNING LABEL
35 HANDWHEEL
36 SPRING PIN
37 MANUAL OVERRIDE BUSHING
38 THRUST WASHER
39 THRUST ROLLER BEARING
40 THRUST WASHER
41 DISC SPRING
42 WORM
43 WORM GEAR ROLL PIN
44 RETAINING RING, EXTERNAL
45 THRUST WASHER
46 BASE
47 CONDUIT ENTRY PLUG
48 NAME TAG
49 BUSHING
50 DRIVE GEAR KEY
51 DRIVE GEAR
52 RETAINING RING, BOWED E-RING
53 GEAR MOTOR
54 LOCK WASHER
55 SOCKET HEAD CAP SCREW
56 DOWEL PIN
57 SOCKET HEAD SHOULDER SCREW
58 WIRE ENTRY GUARD
59 WASHER TERMINAL GROUND
60 FLAT HEAD SCREW
61 GROUND SCREW
62 SWITCH PLATE
63 TERMINAL STRIP TAG: 1-9
64 TERMINAL STRIP
65 PAN HEAD SCREW

Items 11, 12 and 13 are optional.

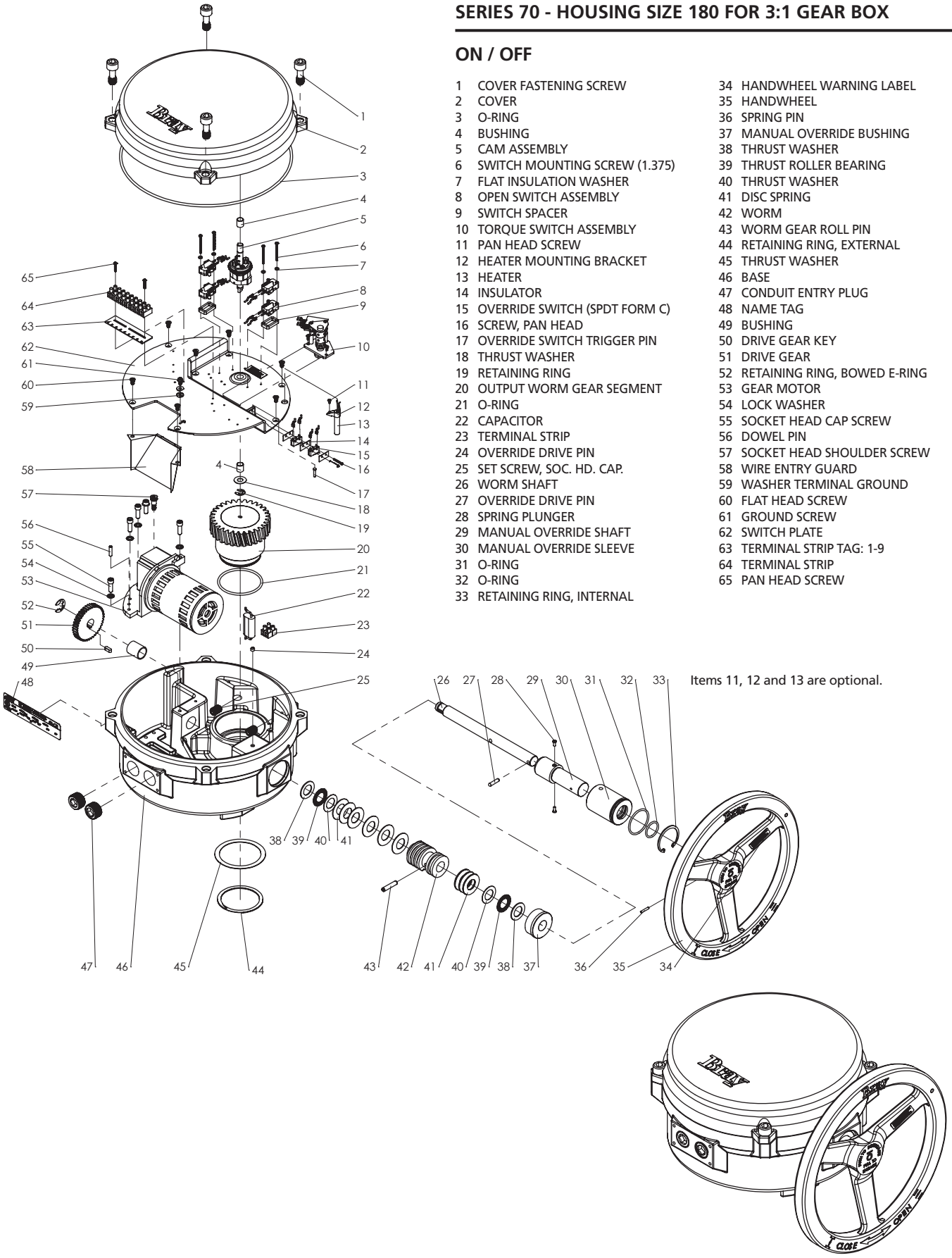

SERIES 70 - 3:1 GEAR BOX

ON / OFF

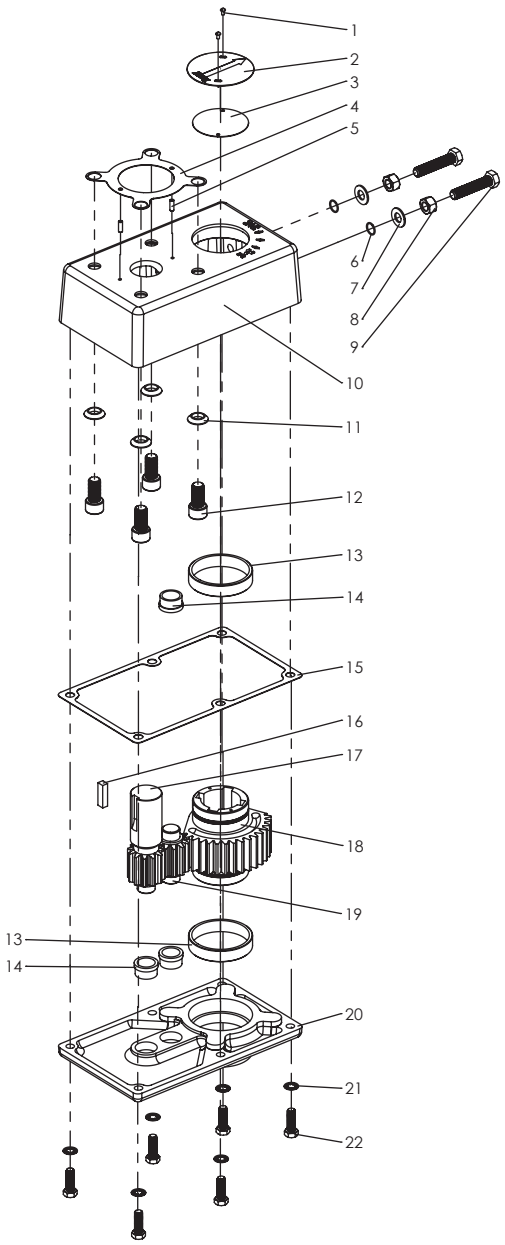

1 FASTENING SCREW
2 POSITION INDICATOR PLATE
3 POSITION INDICATOR GASKET
4 ACTUATOR/GEAR BOX GASKET
5 DOWEL PIN
6 O-RING
7 WASHER, FLAT, NYLON
8 NUT, HEX
9 BOLT, HEX HEAD
10 COVER
11 WASHER, CONICAL
12 ACTUATOR/GEAR BOX FASTENING SCREW
13 OUTPUT GEAR BEARING
14 IDLER/INPUT GEAR BEARING
15 COVER GASKET
16 INPUT GEAR KEY
17 INPUT GEAR
18 OUTPUT GEAR
19 IDLER GEAR
20 BASE
21 LOCK WASHER
22 BASE FASTENING SCREW

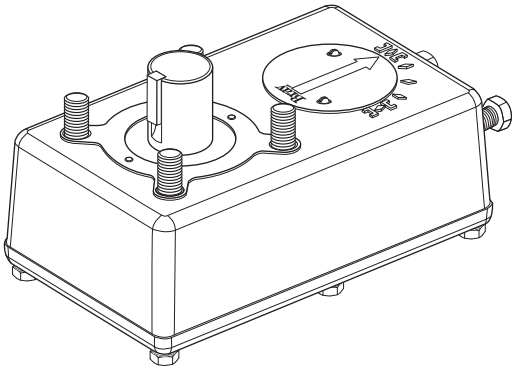

FI/FQI 3120

elster
Vital Connections

evoQ$_4$ Electromagnetic Meter - LF Low Flow

Sizes 1 ½" and 2"

EvoQ$_4$ Low Flow brings stable, accurate measurement to mid-size meter applications.

Specification

Performance		1 ½"	(DN40)	2"	(DN50)
> 95% accuarcy	GPM (m³/h)	0.25	(0.057)	0.25	(0.057)
98.5% - 101.5% accuracy	GPM (m³/h)	1.0-130	(0.227-30)	1.0-170	(0.227-39)
Maximum flow*	GPM (m³/h)	130	(30)	170	(39)
Max. operating pressure	psi (bar)	175	(12)	175	(12)

* Flow in excess of maximum does not affect performance at flows within limits

Materials

Body	Stainless steel grade 304
Flow tube	Stainless steel grade 316
Liner	Polyethylene epoxy
Electrodes	Stainless steel grade 316
Flanges	Epoxy coated cast iron
Register	Stainless steel with glass lens
Register housing/lid	UV-resistant plastic
Environmental class	IP68 hermetically sealed unit waterproof to 30 ft depth

Features	Benefits
Improved low flow performance	Detect smaller leaks
No moving parts	No accuracy degradation
0.5 second sample rate	Suitable for billing apps
Floating flanges	Easy to install
Pulse, Encoder, or Remote	Integrate with AMR / AMI
AWWA lay lengths	No spool pieces or pipe work
IP68 sealed	Submersible and reliable
NSF61 listed	Approved for potable water
10 year continuous life	Eliminate maintenance visits

Operation

The evoQ$_4$ Low Flow is a battery powered electromagnetic water meter that is suitable for a wide range of metering applications. Using Faraday's law of electromagnetic induction, two magnets provide a magnetic field within the pipe; two electrodes measure the induced voltage that is proportional to the flow of conductive water through the field in the pipe. Every 0.5 seconds the measurement is taken and the totalized volume is calculated and updated on the LCD display. The meter is designed for 10 years of continuous operation with no battery changes necessary.

Application

The meter is for use with potable cold water up to 120 °F. The meter will typically register at +/-0.75% accuracy at normal and high flows and better than 95% accuracy at extended low flows. The evoQ$_4$ product line is suited for metering utility customer services for potable water. With the addition of outputs described below, the meter can fulfill a number of distribution management roles as well. The meter is particularly suited to replacing AWWA C700 and C712 mechanical meters for utility billing.

Outputs

The evoQ$_4$ LF can be fitted with one of the output modules available for the meter product line. These modules are common among all sizes and variants of evoQ$_4$. Current modules include pulse (with two pulse channels), Elster protocol encoder, Sensus protocol encoder, the combined pulse + Sensus encoder module, and the remote display interface module. Please see individual specification sheets for these modules.

Connections

The evoQ$_4$ LF comes in AWWA C700 / C712 meter lay lengths. The oval flanges are epoxy coated cast iron to reduce weight and prevent corrosion and conform to ANSI B16.1 Class 125 standards. Full face gaskets are provided with each meter. Allow for 5 pipe diameters of straight pipe upstream and 3 pipe diameters of straight pipe downstream for optimum performance.

LCD

Bright, large and easy-to-read LCD incorporating totalized volume and a reference flow-rate indicator. Alarm functions provide in-situ status ensuring no loss in measuring continuity. An IP68 seal ensures the meter electronics are safely protected providing long term reliability.

Display functions

1. **Low-Battery** – The indicator blinks when the meter has approximately 3 months working life remaining.
2. **End of Life Battery** – Measurement stopped. The indicator appears permanently when the meter life expires. Data is displayed for up to 9 months.
3. **No-Water** – The indicator blinks when there is an empty pipe condition.
4. **Flow Rate** – If water is flowing in the reverse direction a minus sign is displayed to the left of the value.
5. **Net Volume** – Any reverse flow is subtracted from the volume display. The top line displays billable units with the multiplier shown in upper right corner. Measurement resolution is provided in the lower right for testing.

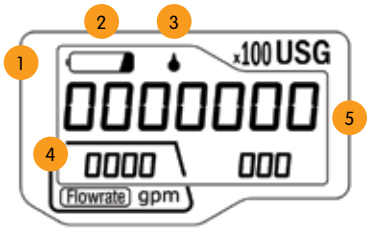

USG

x100

Cuft

x10

m³

Dimensions and net weight

Meter size	A in (mm)	B in (mm)	C in (mm)	Weight lbs (kg)
1 ½"	13 (330)	5 ½ (140)	6 (152)	9.0 (4.1)
2" x 17"	17 (432)	6 ¼ (159)	6 (152)	11.5 (5.2)

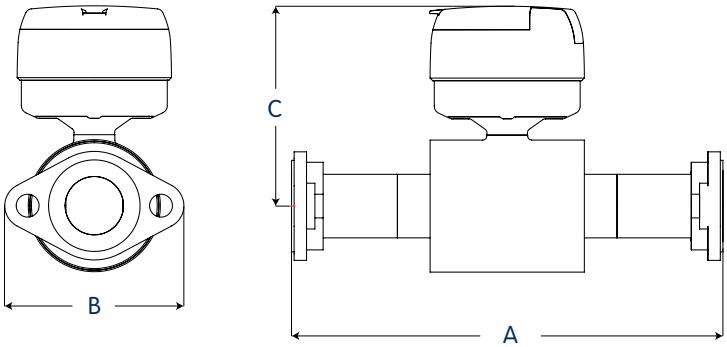

elster
Vital Connections

NSF

United States
Elster AMCO Water, LLC
10 SW 49th Avenue, Building 100
Ocala, FL 34474
T +1 800 874 0890
F +1 352 368 1950
watermeters@us.elster.com

Canada
Elster Canadian Meter Company Inc.
1100 Walker's Line, Suite 101
Burlington, Ontario L7N 2G3
T +1 866 703 7581
F +1 905 634 6705
watermeters@ca.elster.com

Caribbean
Elster AMCO Water, Inc.
P.O. Box 225, Carretera 112 KM 2.3
Isabela, PR 00662
T +1 787 872 2006
F +1 787 872 5427
prwatermeters@pr.elster.com

www.elsteramcowater.com

© 2015 by Elster. All rights reserved.
The company's policy is one of continuous product improvement and the right is reserved to modify the specifications contained herein without notice. These products have been manufactured with current technology and in accordance with applicable AWWA Standards.

Lit Ref: evoQ4LF/03-15

evoQ$_4$ Electromagnetic Meter Sensus Encoder Module

Specification

Protocol	Sensus V frame
Encoded digits	6 most significant v_6 v_8-8 most significant
Encoder ID	10 digit fixed
Power source	Lithium battery (10 yr)
Environmental rating (with appropriate splice kit)	NEMA 6P / IP68
Cable lengths (bare wire)	30 feet, 90 feet
Optional connectors (25')	Itron In Line Connector™ Nicor Connector™
Compatibility	MegaNet™ Enc MTU Itron™ 60W, 60W-R, 200W, 100W Datamatic™ Firefly, MOSAIC Others, contact AMI provider tech support
Materials module	ABS Resin 3 conductor AWG 22 cable

Operation

The Elster AMCO Water evoQ4 Sensus Protocol encoder module is designed for use with 3 wire radio endpoints. The 3 wire to 2 wire adapter module is necessary to allow the encoder to interface with 2 wire endpoints such as wall or pit pads for touch reading or AMR devices that utilize a 2 wire coupler integrated into the radio module.

The encoder reading is obtained through the normal means of interrogation of the reading point via radio endpoint.

The Sensus (also called V frame) protocol is transmitted from the encoder module and reported to the interrogating device.

Reading resolution is determined by the version of Sensus protocol encoder module used and the programming set in the handheld. Either 6 digit or 8 digit reads are transmitted.

evoQ4 size and units	1.5"-4" USG	6"-12" USG	1.5"-4" CuFt	6"-12" CuFt	1.5"-4" M3	6"-12" M3
Resolution						
6 Digit Sensus encoder module	123456 x 1000 USG	123456 x 1000 USG	123456 x 100 CuFt	123456 x 100 CuFt	123456 x 1 M3	123456 x 1 M3
8 Digit Sensus encoder module	12345678 x 10 USG	12345678 x 10 USG	12345678 x 1 CuFt	12345678 x 1 CuFt	12345678 x 10 Litre	12345678 x 10 Litre

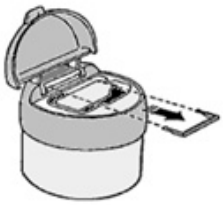

1. Lift the lid, using a small screwdriver blade, carefully remove the pulser clip.

2. Remove the blank cover by lifting up...

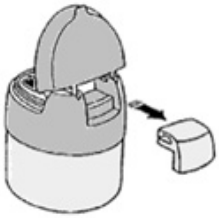

3. ...and then slide out.

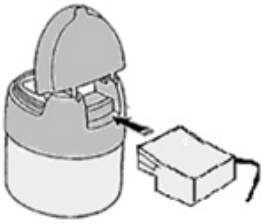

4. Fit the Encoder unit in the opposite manner to the cover removal.

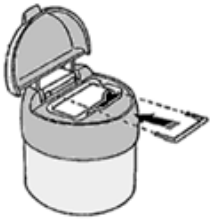

5. Replace the securing clip (lugs uppermost).

WARNING: Take care not to dislodge the rubber gasket on the underside of the unit when fitting / removing.

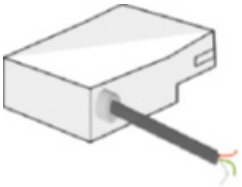

Generic Wire Diagram:

Red: Data
White: V+ (power)
Black: V0 (ground)

United States
Elster AMCO Water, LLC
10 SW 49th Avenue, Building 100
Ocala, FL 34474
T +1 800 874 0890
F +1 352 368 1950
watermeters@us.elster.com

Canada
Elster Canadian Meter Company Inc.
1100 Walker's Line, Suite 101
Burlington, Ontario L7N 2G3
T +1 866 703 7581
F +1 905 634 6705
watermeters@ca.elster.com

Caribbean
Elster AMCO Water, Inc.
P.O. Box 225, Carretera 112 KM 2.3
Isabella, PR 00662
T +1 787 872 2006
F +1 787 872 5427
prwatermeters@pr.elster.com

elster
Vital Connections

www.elsteramcowater.com

© 2013 by Elster. All rights reserved.
The company's policy is one of continuous product improvement and the right is reserved to modify the specifications contained herein without notice. These products have been manufactured with current technology and in accordance with applicable AWWA Standards.

Lit Ref: evoQ4ENCS/05-13

EA_Water module 3.0

AMI network management

Solutions for advanced water AMI

Utilities and consumers have become increasingly aware of the need to conserve water and monitor its consumption. With the improved capabilities of the EA_Water 3.0 module, the utility can deploy modules faster, obtain more precise billing data, and offer improved customer service.

Elster supports all major water meter suppliers' encoded or digital registers.

Reduce inventory and streamlined installation

The EA_Water module is compatible with most all major brands of water meters. Utilities no longer have to plan inventory for each brand of water meter because the module's compatibility can be set at the time of installation. Also, account information is captured at the time of installation, allowing the installer to quickly deploy the module in the field without having to match up the correct unit to the address.

The integral water module and the Elster water meter can be shipped from the factory pre-installed. Remote mounting options allow units to be wall- or pipe-mounted with up to 100 feet (30 meters) of wire

Improved network communications

The EA_Water module supports two-way communication within the EnergyAxis mesh local area network (EA_LAN). The module automatically finds the optimal path to the first hop toward the EA_ Gatekeeper, giving the EA_Water module the same robust network coverage as other devices within the EA_LAN.

Using the time signals obtained from the EA_LAN, water meter intervals are synchronized with real time, giving the utility an accurate view of data simply not possible with devices that merely bubble-up at various, uncoordinated times.

Secure by design

As with other network elements within the EnergyAxis System, the EA_Water 3.0 module has security built in and not patched on. Supporting AES-128 bit encryption, the EA_Water module protects its data and communications with enterprise strength technology.

To ensure secure upgrades, the EA_Water 3.0 uses advanced techniques when implementing over-the-air (OTA) upgrades of its firmware. Even if the utility does not implement all of the security features of the EA_LAN, the firmware image and communication link are secured by AES-128 bit encryption. When the OTA process is complete and verified, the EA_Water modue will automatically resume operation as it was programmed to do prior to the upgrade.

- Pit mounted or remote mounted (shown)
- As a network element within Elster's EnergyAxis® System, the EA_Water 3.0 offers enhanced network communications for advanced water AMI.
- Elster takes water AMI to the next level, supporting encrypted two-way communications, OTA upgradeability, and automatic communication pathway optimization.

About the EnergyAxis System

Over 80 EnergyAxis systems deployed worldwide, with over 4.5 million smart endpoints, are being used every day for both advanced metering infrastructure and distribution automation applications. EnergyAxis is a utility-grade, Internet protocol (IP) based two-way communications system based on a dynamic, flexible, and scalable architecture.

The EnergyAxis System provides a layered end-to-end security architecture based on NIST, NEMA, and FIPS approved standards. EnergyAxis supports AES-128 bit encryption for any inter-network device communication session.

Water meter compatibility

Fully compatible with current digital and encoded registers from the following manufacturers:

- AMCO (Elster)
- Badger
- Hersey
- Metron Farnier
- Neptune
- Sensus

EA_Water 3.0 module specifications

- Unlicensed frequeny hopping spread spectrum (FHSS) RF technology
- 902 MHz to 928 MHz communication range
- Compliant with FCC Rules, Part 15 and Industry Canada RSS-210
- Temperature range of -40 °C to +65 °C
- Remote housing meets IP67
- Pit housing meets IP68
- Multiple operation mode:
  - fixed network
  - hybrid (mobile/fixed)

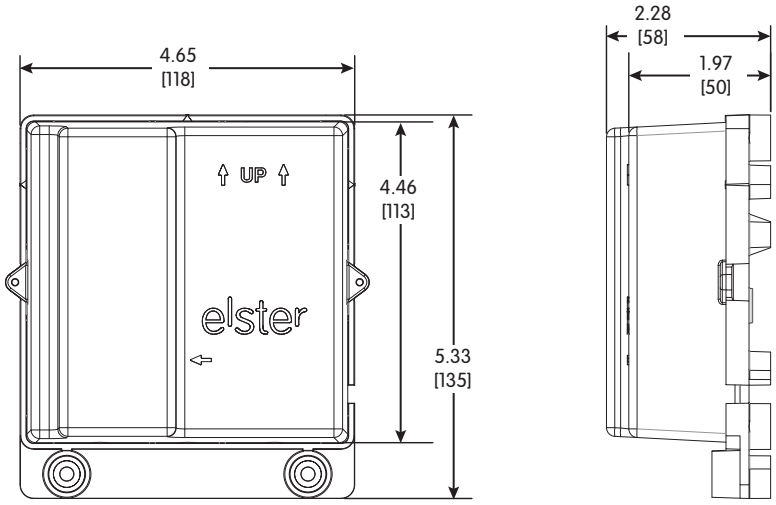

Approximate dimensions in inches [millimeters]

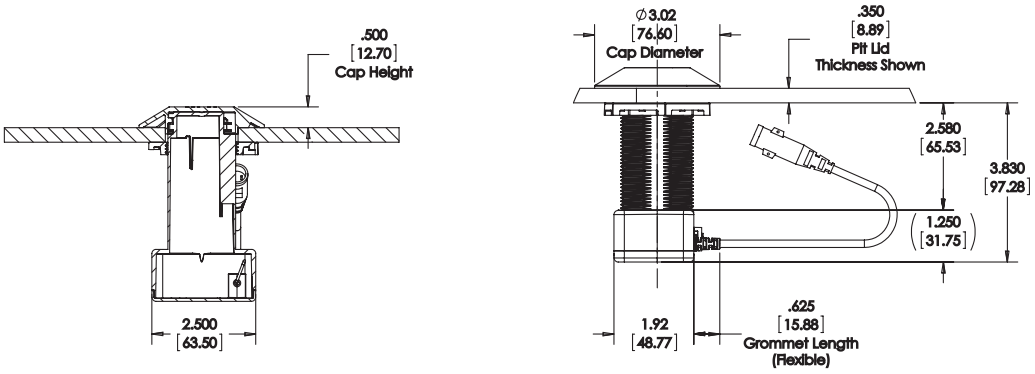

Approximate dimensions in inches [millimeters]

Elster
208 S Rogers Lane
Raleigh, NC 27610-2144
United States

T +1 800 257 9754 (Elster sales information)
T +1 800 338 5251 (Elster product support)
T +1 905 634 4895 (Canada)

© 2012 by Elster. All rights reserved.

Information contained herein is subject to change without notice. Product specifications may change. Contact your Elster representative for the most current product information. Printed in the United States.

www.elster.com

elster
Vital Connections

DS42-1056C

James, Cooke & Hobson, Inc.

Sales Engineers / Process Equipment

Submittal Data

Kirtland AFB Phase 4 Treatment Plant
Albuquerque, NM

Cla-Val Model 36 Combination Air Valve

Albuquerque • El Paso • Phoenix

Submittals

June 9, 2015

Albuquerque, New Mexico

Cla-Val Model 36 combination air valve
1” NPT inlet and outlet
Model 361-CAV564.3

Prepared for: Albuquerque Pump and Pipe
4300 Ellison Street NE
Albuquerque, NM 87109

Prepared by: JCH/ James, Cooke & Hobson
Kendra Brown
3810 Academy Parkway S. NE
Albuquerque, NM 87109

Table of Contents

1. Project references
    a. Equipment Supplier/ Local Representative/ Parts & Service Contact
    b. Manufacturer

2. Submittal Data

Project References

1. Equipment Supplier & Source for Parts and Repairs:
   JCH/ James, Cooke & Hobson, Inc.
   3810 Academy Parkway S, NE
   Albuquerque, NM 87109
   Website: www.jchinc.com
   Email: sales@jchinc.com
   (505) 344-7100

   Order number: N/A

2. Manufacturer:
   Cla-Val
   1701 Placentia Ave.
   Costa Mesa, CA 92627-4475
   Website: www.cla-val.com
   800-942-6326

Series 36
Combination Air Release and Vacuum Valve

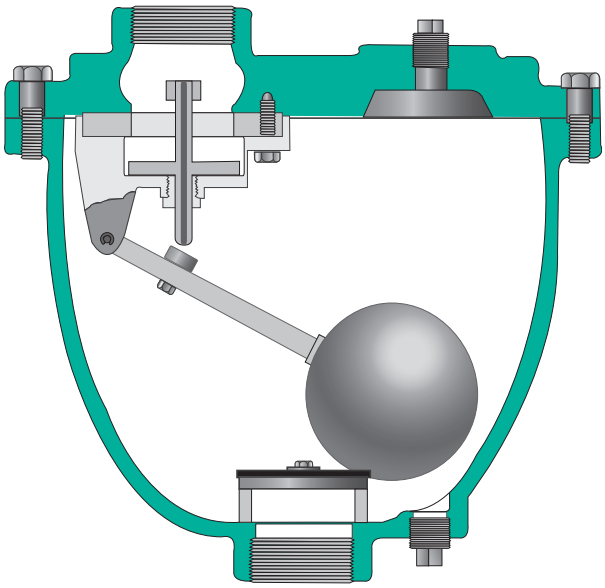

- **Stainless Steel T316 Standard**
- **Stainless Steel T316 Floats Guaranteed**
- **Fully Ported Valves - No Restrictions**
- **Easily Serviced Without Removal From Pipeline**
- **Engineered For Drip Tight Seal At Low Pressures**

The Cla-Val Series 36 Air and Vacuum Valve is a multipurpose valve that combines the operation of both the Model 34 Air Release Valve and Model 35 Air and Vacuum Valve. It functions to exhaust large quantities of air in the pipeline during the filling cycle and to admit air, as necessary, to prevent potentially dangerous vacuum from forming when being emptied either intentionally or as a result of pipeline breakage.

Note: See Sizing Guide Pages 14 & 15

Installation

The Series 36 Combination Air Valve should be installed at high points at grade changes within the pipeline.

Mount the unit in the vertical position on top of the pipeline with an isolation valve installed below each valve in the event servicing is required. A vault with adequate venting and drainage should also be provided.

Design / Purchase Specifications

The combination air valve shall combine the operating features of both an air and vacuum valve and an air release valve in one housing. The air and vacuum valve portion shall automatically exhaust large quantities of air during the filling of the pipeline and automatically allow air to reenter the pipeline when the internal pressure of the pipeline approaches a negative value due to column separation, draining of the pipeline, or other emergency. The air release valve portion shall automatically release small amounts of air from the pipeline while it is under pressure.

The inlet and outlet of the valve shall have the same cross-section area. The float shall be guided by a stainless steel guide shaft and seat drip tight against a synthetic rubber seal. 4" and larger valves shall have dual guided shafts of hexagonal cross section and a protective discharge hood.

The float shall be of all stainless steel construction and capable of withstanding maximum system surge pressure without failure. The body and cover shall be concentrically located and of cast iron and the valve internal parts shall be of T316 stainless steel or Buna-N® rubber.

The Combination Air Release and Vacuum Valve shall be manufactured per ANSI/AWWA C512-04 Series 36 from Cla-Val., Newport Beach, CA, U.S.A.

Design Specifications

Size Inlet/Outlet
1", 2", 3", 4" NPT or Flanged
3" through 8"
125 lb. flange & ANSI
300 lb. flange & ANSI

Pressure Ratings (see note)
150 psi
300 psi

Temperature Range
Water to 180°F

Note: Specify when operating pressure is below 10 PSI

Materials
Body and Cover:
Cast Iron ASTM A 126, Class B

Float:
Stainless Steel T316

Plug:
Stainless Steel T316

Internal Parts:
Stainless Steel T316

Seal: Buna-N® Rubber

Note: Manufactured to meet ANSI/AWWA C512-04

When Ordering, Please Specify

1. Model Number
2. Inlet/Outlet Size
3. Inlet Pressure Rating
4. Orifice Size

Optional:
For Anti-Shock Air Valve shut-off, order with arrestor check device (suffix "AC").
See Data Sheet Page 34 & 35

CLA-VAL

Series 36

Combination Air Valve – Single Body Style

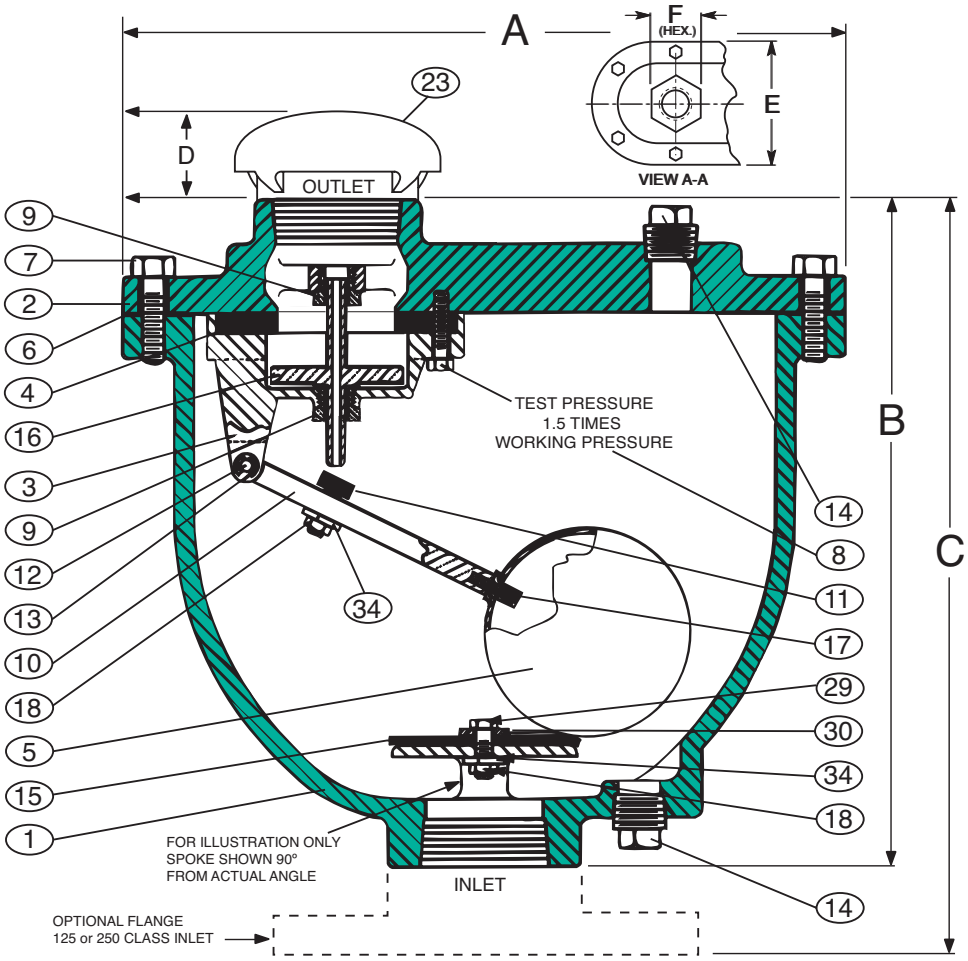

Detail No.	Part Name	Material
1	Body	Cast Iron ASTM A126, Class B
2	Cover	Cast Iron ASTM A126, Class B
3	Baffle	Cast Iron ASTM A126, Class B
4	Seat	Buna-N®
5	Float	Stainless Steel T316, ASTM A276
6	Gasket	Lexide NK - 511 (Non-Asbestos)
7	Cover Bolt	Alloy Steel ASTM A449, Grade 5
8	Retaining Screw	Stainless Steel T316, ASTM A276
9	Guide Bushing	Stainless Steel T316, ASTM A276
10	Float Arm	Stainless Steel T316, ASTM A276

Detail No.	Part Name	Material
11	Orifice Button	Stainless Steel T316 & Buna-N®
12	Pivot Pin	Stainless Steel T316, ASTM A276
13	Retaining Ring	Stainless Steel PH 15-7 MO
14	Pipe Plug	Malleable Iron
15	Cushion	Buna-N®
16	Plug	Stainless Steel T316, ASTM A276
17	Float Retainer	Stainless Steel T316, ASTM A276
18	Lock Nut	Stainless Steel T316, ASTM A276
23	Screened Hood	Optional-Screened Outlet Hood
29	Cushion Retainer	Stainless Steel T316, ASTM A276
30	Washer (internal)	Stainless Steel T316, ASTM A276
34	Washer (external)	Stainless Steel T316, ASTM A276

Note 1: All Stainless Steel Parts Austenitic
Note 2: Manufactured to meet ANSI/AWWA C512-04

Valve Size	Model No.	A	B	C	D Approx.	E	F	Inlet Size	Outlet Size	Orifice Size	CWP PSI	Inlet** Flange	Screened Hood	Wt. Lbs.
1"	361-CAV564.3	11 3/8"	10 1/2"	12"	2"	7"	2"	1" N.P.T	1" N.P.T	3/32"	300	SPK-001F	SPK-1H	40
2"	362-CAV332.3	14"	13"	15"	3"	8"	3"	2" N.P.T	2" N.P.T	3/32"	300	SPK-002F	SPK-2H	71
3"	363-CAV332.3	16"	15"	17"	4"	9 5/8"	4 3/8"	3" N.P.T.	3" N.P.T	3/32"	300	SPK-003F	SPK-3H	112
4"	364-CAV332.3	18 1/2	17"	19"	5"	11"	5 3/8"	4" N.P.T	4" N.P.T	3/32"	300	SPK-004F	SPK-4H	170

CLA-VAL P.O. Box 1325 • Newport Beach, CA 92659-0325 • Phone: 949-722-4800 • Fax: 949-548-5441 • E-mail: claval@cla-val.com • Website cla-val.com
© Copyright Cla-Val 2007 Printed in USA Specifications subject to change without notice.

RUPERT

PLUMBING AND HEATING

PIPE FABRICATION

Weamco Startup Strainer

Shown on 140705-001-PI-03-400003 DETAIL 1

Cone Strainers

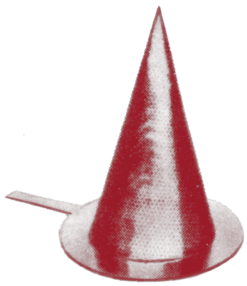

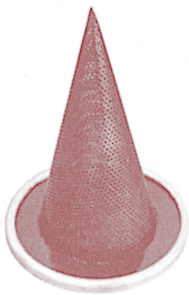

STANDARD MATERIAL IS
PERFORATED 1/8" DIAMETER
HOLES ON 3/16" CENTERS
40% OPEN AREA
CARBON STEEL

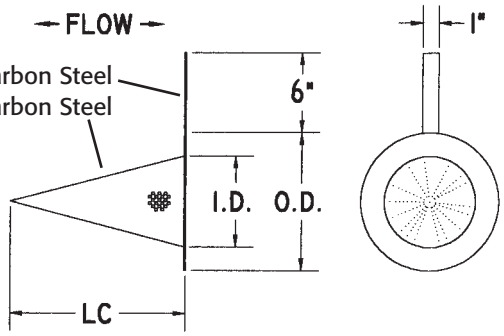

TYPE CP

LENGTH L C						
LINE SIZE	STD. LGTH.	75%	100%	150%	200%	300%
2	4	–	4	6	8	11
3	6	–	6	9	12	18
4	8	–	8	10	13	20
6	11	–	11	13	18	27
8	12	–	12	17	23	34
10	12	12	14	22	29	44
12	12	12	16	26	35	50
14	14	14	18	27	36	53
16	16	16	21	31	40	60
18	18	18	24	35	46	68
20	20	20	26	39	51	76
24	23	23	31	45	60	90
30	29	29	38	57	76	114
36	33	33	44	66	88	126

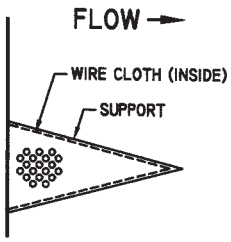

TYPE CWI
Wire Cloth Inside
*Perforated Support

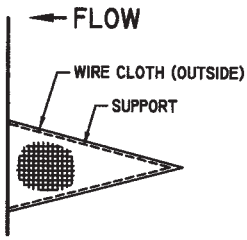

TYPE CWO
Wire Cloth Outside
*Perforated Support

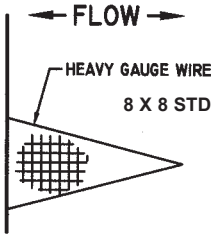

TYPE CW
1 Ply Heavy
Wire
(Customers' Choice)

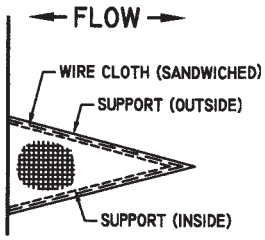

TYPE CTP
Expanded Support
Inside and Outside

* Expanded metal support available

REFERENCE STRAINER DESIGN SELECTION AND
CONSTRUCTION SECTION FOR OPTIONAL MATERIALS.
(Reference Bulletin AC112 for Wire Cloth, Perforated
and expanded metal availability.)

Available with any type
temporary strainer

Percent open areas shown are compared to the cross sectional flow area of Standard Weight Pipe. All dimensions are in inches. Standard length designed to fit weld neck flange plus long radius weld elbow. OD is designed to fit inside flange bolt hole circle. Full face is available, add FF to type of strainer. ID is designed to fit inside standard weight pipe for 150# and 300# rating, extra strong pipe for 600# rating. Advise pipe wall or schedule for higher pressure ratings. See Bulletins BP112 and FP112 for additional Temporary Strainer information.

WEAMCO METRIC
(918) 445-1141
(800) 331-3790
Fax: (918) 445-4617
sales@weamco.com
www.weamco.com

RUPERT

PLUMBING AND HEATING

PIPE FABRICATION

Butterfly Valves

Resilient Seated Butterfly Valves

ABZ VALVE | A GFT COMPANY

Figures 101/108/102

Sizes
2" - 12"
Rated Up To 175 PSI

ABZ VALVES & CONTROLS
PO Box 157 • 113 W. Main • Madison, KS 66860
620-437-2440 • FAX 620-437-2435
www.abzvalve.com • info@abzvalve.com

ABZ Precision Built Butterfly Valves

Resil-O-Seat™ Seated Valves for Chemical and Abrasion Resistance Applications.

The figures 101/102/108 provide excellent flexibility with a variety of trim materials. These are available for a wide selection of applications.

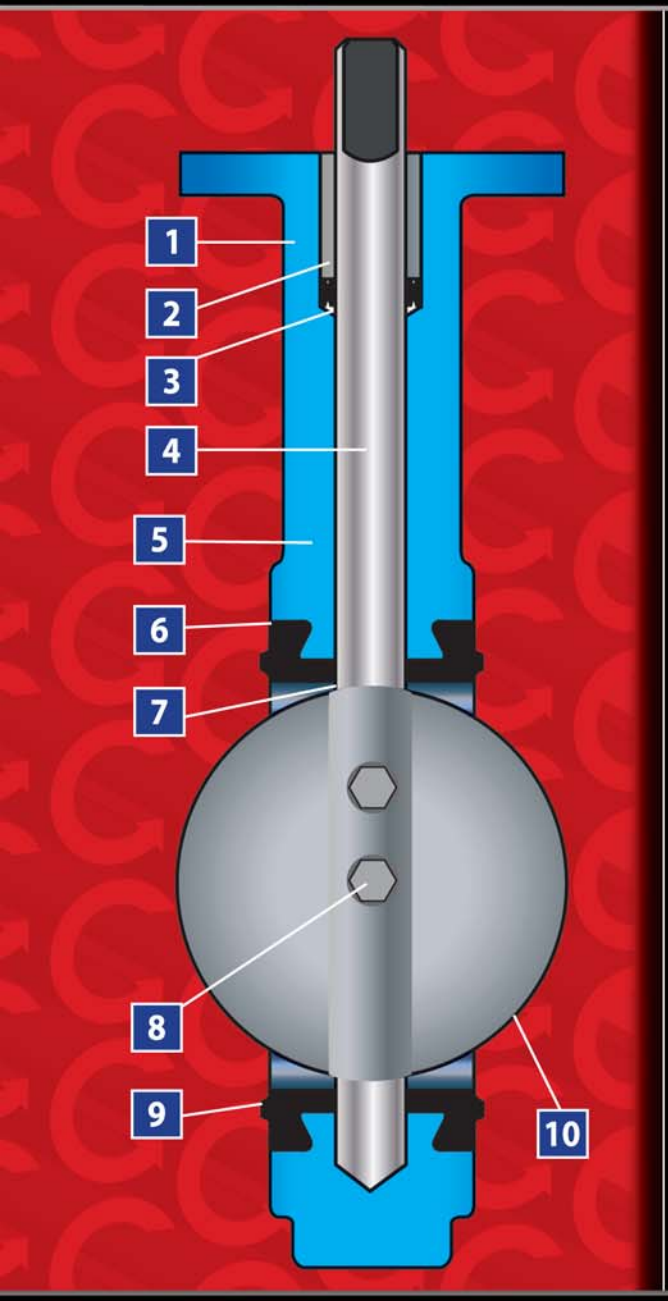

1 Body machined to high tolerances. Guaranteed standard dimensions for interchangeability of parts and actuators.

2 Top bushings protect the stem from side thrust of operators. They are made of impact and corrosion resistant materials.

3 Special double-V-shape of stem seal self-adjusts to protect the stem area for either vacuum or pressure use.

4 Stem extends through disc and aligns with socket in body. Stem end has standard dimensions for operator interchangeability.

5 Long neck allows for insulation requirements.

6 The special snap-in Resil-O-Seat™ design fixes seat in place without bonding. The Resil-O-Seat™ is 100% field replaceable - no special tools required.

7 Stem and body are isolated from the line media by the interference fit of the primary seal created between the disc and seat.

8 Stainless steel cap screws securely hold disc to stem. O-ring seal prevents leakage into the stem area and creates a positive connection.

9 Resil-O-SeatTM forms a seal against all standard ANSI 125/150 flanges. Gasketing requirements are eliminated.

10 Disc edge is individually processed through machining and hand buffing for a smooth edge, providing a bubble tight shutoff and maximum seat life.

101 is a wafer style body
108 is semi-lug style body
102 is a full lug style body

ABZ VALVE
A GFT COMPANY

FIGURES 101/108/102

Valve Dimensions

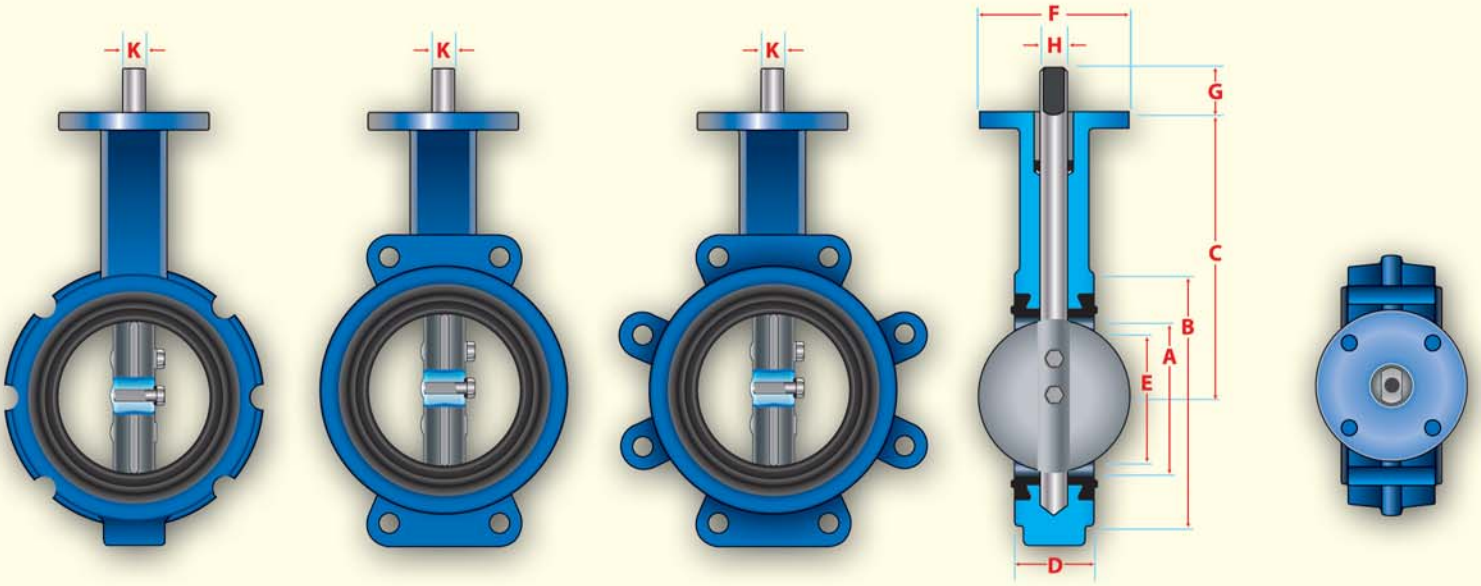

All standard seats are Food Grade with the exception of Viton

Valve Size	DIMENSIONS									TOP PLATE DRILLING			TAPPED LUG DATA				WEIGHT (POUNDS)		
	A	B	C	D	E	F	G	H	K	Bolt Circle	No. Holes	Hole Dia.	Bolt Circle	No. Holes 102	No. Holes 108	Tap	101	108	102
2	$2^{1/8}$	$4^{1/8}$	$5^{1/2}$	$1^{5/8}$	$1^{11/16}$	4	$1^{1/4}$	9/16	3/8	$3^{1/4}$	4	7/16	$4^{3/4}$	4	4	5/8-11 UNC	7	8	8
$2^{1/2}$	$2^{9/16}$	$4^{7/8}$	6	$1^{3/4}$	$2^{3/16}$	4	$1^{1/4}$	9/16	3/8	$3^{1/4}$	4	7/16	$5^{1/2}$	4	4	5/8-11 UNC	8	9	9
3	$3^{1/8}$	$5^{3/8}$	$6^{1/4}$	$1^{3/4}$	$2^{7/8}$	4	$1^{1/4}$	9/16	3/8	$3^{1/4}$	4	7/16	6	4	4	5/8-11 UNC	9	10	10
4	$4^{1/8}$	$6^{7/8}$	7	2	$3^{7/8}$	4	$1^{1/4}$	5/8	7/16	$3^{1/4}$	4	7/16	$7^{1/2}$	8	4	5/8-11 UNC	13	17	20
5	$5^{3/16}$	$7^{5/8}$	$7^{1/2}$	$2^{1/8}$	5	4	$1^{1/4}$	5/8	7/16	$3^{1/4}$	4	7/16	$8^{1/2}$	8	4	3/4-10 UNC	19	20	23
6	$6^{1/8}$	$8^{3/4}$	8	$2^{1/8}$	6	4	$1^{1/4}$	5/8	7/16	$3^{1/4}$	4	7/16	$9^{1/2}$	8	4	3/4-10 UNC	20	24	27
8	$8^{1/8}$	11	$9^{1/2}$	$2^{1/2}$	8	6	$1^{1/4}$	3/4	1/2	5	4	9/16	$11^{3/4}$	8	4	3/4-10 UNC	36	38	43
10	$10^{1/8}$	$13^{3/8}$	$10^{3/4}$	$2^{1/2}$	$10^{1/16}$	6	$1^{1/4}$	7/8	5/8	5	4	9/16	$14^{1/4}$	12	4	7/8-9 UNC	49	55	63
12	$12^{1/8}$	$16^{1/8}$	$12^{1/4}$	3	$11^{15/16}$	6	2	$1^{1/8}$	1/4	5	4	9/16	17	12	4	7/8-9 UNC	70	82	90

STANDARD CONSTRUCTION SPECIFICATIONS:

Body: Cast Iron, Ductile Iron (Lug) and Aluminum (Wafer)

Disc: 316 Stainless Steel, Aluminum Bronze, Ductile Iron, Epoxy Coated Ductile Iron

Stem: 316 Stainless Steel, 416 Stainless Steel, Carbon Steel

Resilient Seat: EPDM, Buna-N, Viton, Natural Rubber, White Buna, White Neoprene.

Stem Bushing: Teflon® – Graphite Impregnated

Stem Packing: Buna-N and Viton

Additional materials are available for a wide selection of applications.

NOTES:

1. Dimension "K" not applicable to 12" size. The 12" stem is round with ¼" Key.
2. The figures 101, 102 and 108 cannot be used on pipe or flange with an inside diameter less than the "E" dimension.
3. Valves are rated up to 175 PSI bi-directional service and 85 PSI end of line rating. Undercut disc is rated up to 50 PSI bi-directional service and 25 PSI end of line rating. Preferred direction is with disc bolts on downstream side of disc.
4. Designed in accordance with sections of API 609 Catagory A, ASME 16.1/16.5, ASME 16.34 and MSS SP67. Design tested in accordance with API 598.
5. Compatible with ANSI Class 125/150 flange standards.

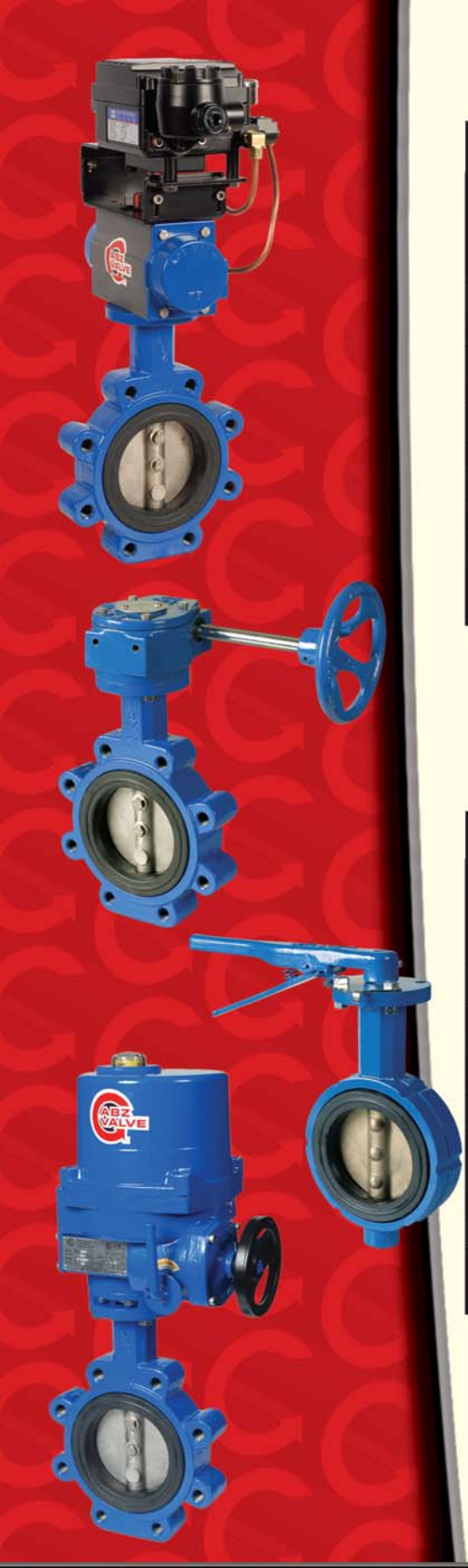

Rated Flow Coefficient (Cv) - Figure 101/108/102

Valve Size	ANGLE OF DISC OPENING								
	10°	20°	30°	40°	50°	60°	70°	80°	90°
2	1.67	7.7	17	29	48	74	115	145	195
2 1/2	2.50	11.0	25	44	69	109	174	237	307
3	3.33	15.7	37	64	105	165	276	377	487
4	5.00	27.7	63	110	177	278	472	671	827
5	8.33	43.7	99	177	276	443	752	1,083	1,325
6	13.33	58.7	136	242	385	616	1,075	1,521	1,883
8	20.00	107.3	247	434	687	1,094	1,821	2,671	3,239
10	31.67	174.0	394	696	1,092	1,770	2,983	4,288	5,210
12	47.0	251.7	578	1,002	1,665	2,654	4,398	6,466	8,026

Cv is defined as the volume of water in U.S.G.P.M. that will flow through a given restriction or valve opening with a pressure drop of one (1) p.s.i. at room temperature. Recommended control angles are between 25°-70° open.

Torque Chart - Figure 101/108/102

Valve Size	NORMAL CONDITIONS					SEVERE CONDITIONS				
	Δ P=0	Δ P=50	Δ P=100	Δ P=150	Δ P=175	Δ P=0	Δ P=50	Δ P=100	Δ P=150	Δ P=175
2	221	230	240	250	254	373	384	400	406	410
2 1/2	269	283	288	302	311	454	464	475	486	497
3	322	341	365	379	392	540	568	589	611	634
4	480	514	542	576	590	816	848	886	918	936
5	653	706	754	806	854	1,102	1,162	1,220	1,274	1,301
6	907	1,008	1,109	1,210	1,260	1,529	1,642	1,756	1,868	1,926
8	1,512	1,714	1,915	2,112	2,215	2,549	2,776	3,002	3,229	3,343
10	2,318	2,621	2,900	3,224	3,372	3,910	4,250	4,590	4,931	5,101
12	3,125	3,629	4,138	4,637	6,112	5,270	5,838	6,404	6,971	7,258

Undercut disc available.

All torques shown in inch lbs. 20% Safety factor already included.

ABZ VALVES & CONTROLS, INC.
A Global Flow Technologies Company
P.O. Box 157 • 113 West Main • Madison, KS 66860
PHONE: 620-437-2440 • FAX: 620-437-2435
www.abzvalve.com • www.globalflowtech.com
info@abzvalve.com

The data presented in this bulletin is for general information only. Manufacture is not responsible for compatibility or acceptability of these products in relation to system requirements. Patents and Patents Pending in U.S. and foreign countries. All rights reserved. Printed in U.S.A. ABZ reserves the right to change product designs and specifications without notice. Copyright 2008.

Certified System ISO 9001-2008

RUPERT

PLUMBING AND HEATING

PIPE FABRICATION

40 05 13-2.1: Product Data—Part 2 additional items

This section contains the following:

- Backflow preventer
- Ball Valves
- Sump pump
- Tank Vent
- Wye Strainer

RUPERT

PLUMBING AND HEATING

PIPE FABRICATION

BACKFLOW PREVENTER

"Apollo" Valves

SUBMITTAL SHEET

LEAD FREE*

Model RP4A & RPLF4A

Reduced Pressure Principle **Backflow Preventer**

– A Series –

Job Name:	
Job Location:	
Engineer:	
Contractor:	
Tag:	
PO Number:	
Representative:	
Wholesale Distributor:	

SPECIFICATIONS

The Apollo® Model RP4A and RPLF4A Lead Free* Reduced Pressure Backflow Preventer A Series provide maximum protection of the potable water supply due to back-siphonage or backpressure from substances that are hazardous to the potable water supply. The top accessed modular check valve cartridges provide captured springs, replaceable seats, and reversible silicone seat discs. This **Made in America** assembly features ball valve shutoffs with stainless steel handles and nuts as standard and carries the **five-year** Apollo® factory warranty.

FEATURES

- Low pressure loss documented by independent approval agencies
- Easily removable modular check valve cartridge
- Captured stainless steel springs
- Ball valve shutoffs w/ SS handles & nuts standard
- Top-mounted test cocks for easy testing
- Modular relief valve
- Chloramine-resistant elastomers
- No special tools required
- **Made in the USA**
- Horizontal installation

PERFORMANCE RATING

- Maximum Working Pressure: 175 psi
- Temperature Range: 33 ° F – 180 ° F

APPROVALS

- ASSE 1013
- CSA B64.4
- IAPMO
- Approved by the Foundation for Cross-Connection Control and Hydraulic Research at the University of Southern California

STANDARD MATERIALS LIST

Part Name	Material
Body, Caps	Bronze C84400 or C89836 Lead Free*
BV Shutoffs, Test cocks	Bronze C84400 or C87800 Lead Free*
Check Valve Cartridges	Glass-Filled PPO
Springs	300 Series Stainless Steel
Seat Discs	Chloramine-resistant Silicone
O-rings	Chloramine-resistant EPDM

DIMENSIONS

Model Number	Size (in.)	Dimensions (in.)						Wt. (lbs.)
		A	B	C	D	E	F	
4A-203-A2F	1/2"	10-7/8	7-3/8	7-1/8	2-7/8	3-1/4	3-7/8	6.9
4A-204-A2F	3/4"	12-5/8	8-1/2	7-3/8	3-1/8	3-1/2	3-7/8	8.2
4A-205-A2F	1"	14-5/8	9-1/2	8	3-1/4	4	4	11.7
4A-206-A2F	1-1/4"	17-1/2	11-3/4	9-7/8	5-1/8	4-1/2	5-3/8	13.6
4A-207-A2F	1-1/2"	18	11-5/8	9-7/8	5-1/8	4-1/2	5-3/8	17.4
4A-208-A2F	2"	20-1/8	12-3/4	11	5-7/8	5	6	24.5

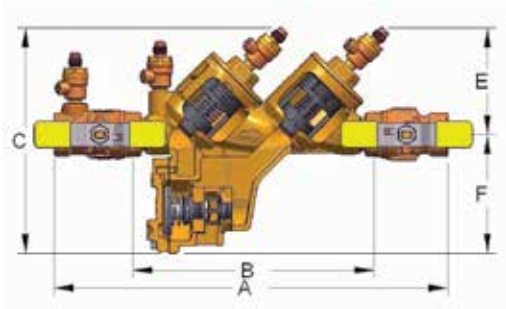

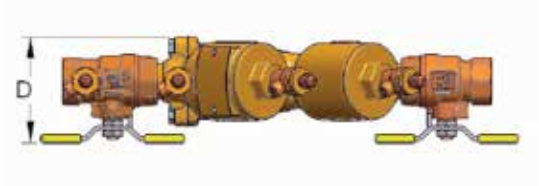

** LEAD FREE: The wetted surfaces of this product shall contain no more than 0.25% lead by weighted average. Complies with Federal Public Law 111-380. ANSI 3rd party approved and listed.*

Apollo Valves, Manufactured by **Conbraco Industries, Inc.**
701 Matthews Mint-Hill Road, Matthews, NC 28105 USA
www.**apollovalves**.com | (704) 841-6000

This specification is provided for reference only. Conbraco Industries Inc. reserves the right to change any portion of this specification without notice and without incurring obligation to make such changes to Conbraco products previously or subsequently sold. Please visit our website @ www.apollovalves.com for the most current information.

AALBERTS INDUSTRIES

"Apollo" Valves

SUBMITTAL SHEET

LEAD FREE*

Model RP4A & RPLF4A

Reduced Pressure Principle **Backflow Preventer**

– A Series –

FACTORY CODE

4A [XX]	2 X	X	XX	F	X	
	Y-STRAINER	SIZE	SHUT-OFF VALVES			OPTIONS
4A = Non-Lead Free 4ALF = Lead Free*	☐ 0 = None (Standard) ☐ 1 = With Y-Strainer (Shipped loose)	☐ 3 = 1/2" ☐ 4 = 3/4" ☐ 5 = 1" ☐ 6 = 1-1/4" ☐ 7 = 1-1/2" ☐ 8 = 2"	☐ A2 = w/ball valves (Standard) ☐ A4 = w/union end ball valves	☐ Blank = NPT testcocks ☐ F = SAE testcocks	☐ Blank = Standard SS Handle ☐ LL = Locking lever handles (1/2" - 2")	

FLOW CURVES

● Meter Rated Flow

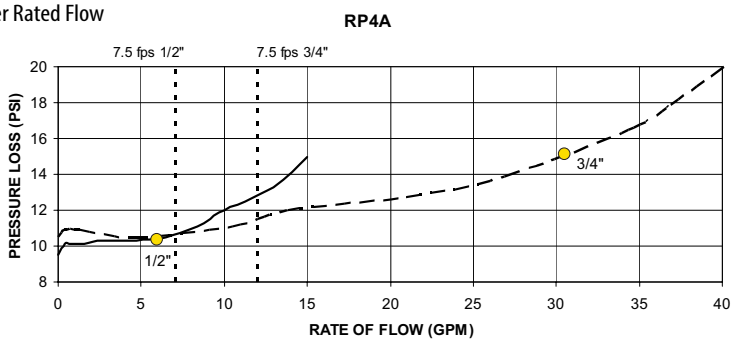

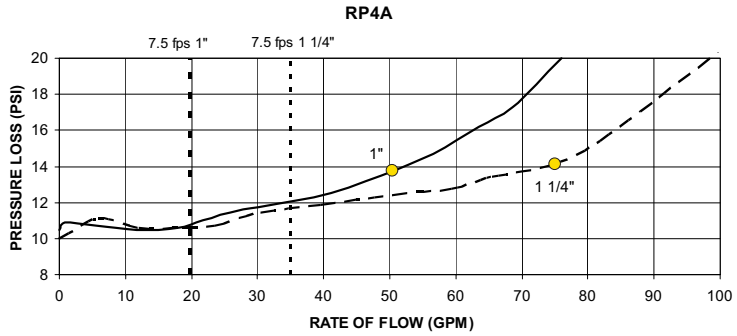

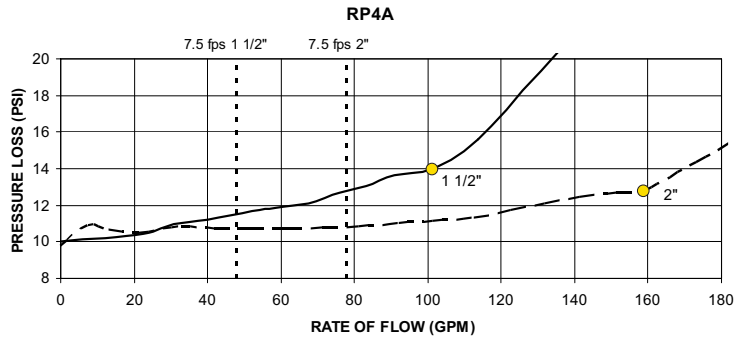

** LEAD FREE: The wetted surfaces of this product shall contain no more than 0.25% lead by weighted average. Complies with Federal Public Law 111-380. ANSI 3rd party approved and listed.*

Curves developed from independent approval agencies actual tests – Consult factory for details.

● indicates rated flow as determined by approval agencies, 7.5 ft/sec is the typical maximum Plumbing system flow rate.

Apollo Valves, Manufactured by **Conbraco Industries, Inc.**
701 Matthews Mint-Hill Road, Matthews, NC 28105 USA
www.**apollovalves**.com | (704) 841-6000

This specification is provided for reference only. Conbraco Industries Inc. reserves the right to change any portion of this specification without notice and without incurring obligation to make such changes to Conbraco products previously or subsequently sold. Please visit our website @ www.apollovalves.com for the most current information.

AALBERTS INDUSTRIES

RUPERT

PLUMBING AND HEATING

PIPE FABRICATION

BALL VALVES

"Apollo" Valves

SUBMITTAL SHEET

LEAD FREE

77CLF Series

Bronze Full Port **Ball Valve**

Job Name:	
Job Location:	
Engineer:	
Contractor:	
Tag:	
PO Number:	
Representative:	
Wholesale Distributor:	

DESCRIPTION

The Apollo® 77CLF "Contractor Series" 2 piece ball valve features a de-zincification resistant, Lead Free* bronze body, premium "multi-fill" MPTFE seats and stem packing, and a Lead Free* "Solid Ball" design that delivers true full-port flow performance. Cast and machined in Apollo's South Carolina manufacturing plants using proven Lead Free* materials.

FEATURES

- Easily Identifiable White Handle and Blue "Lead Free" Hang Tag
- EZ-Solder™ Lead Free Bronze
- Lead Free* Brass & Bronze Materials
- NSF/ANSI 61 Section 8, Annex F & G
- Multi-Fill PTFE Seats & Seals.
- Manufactured and 100% Factory Tested in the USA

PERFORMANCE RATING

- Maximum Pressure: 600 psi CWP, 150 SWP
- Maximum Temperature: 500°F
- Vacuum service to 29 in. Hg

APPROVALS

- MSS SP-110; Ball Valves
- NSF/ANSI 61 Section 8, Annex F & G
- NSF/ANSI 372 Lead Free
- ANSI 3rd Party Approval to 0.25% Lead Max.
- CSA B51 CRN: OC10908.5C
- IAPMO R&T / UPC - IGC 157
- City of Los Angeles DBS

OPTIONS (For 1/4" to 2")

- (-01) Standard
- (-04) 2-1/4" Stem Extension
- (-07) Tee Handle
- (-10) S.S. Handle and Nut
- (-11) Therma-Seal™ Insulating Tee Handle
- (-27) Locking Handle
- (-92) Standard lever with Balancing Stop
- (-94) 2-1/4" Stem Extension with Balancing Stop

MODELS

- 77CLF100/200 Series - Standard Trim
- 77CLF140/240 Series - 316 SS Ball & Stem

STANDARD MATERIALS LIST

Part Name	Material
Gland	B16 Brass
Nut	Zinc Plated Steel
Packing	MPTFE
Seat	MPTFE
Stem	C27451 Lead Free* Brass
Ball	C27451 Lead Free* Brass Cr. Plated or B283, C37700
Retainer	C27451 Lead Free* Brass or B283, C37700 (1/4"-1/2")
	B584-C89836 Lead Free* Bronze (3/4"-2 1/2")
Body	B584-C89836 Lead Free* Bronze
Handle	Zinc Plated Steel w/ Vinyl Grip

– **Continued on the next page.**

** LEAD FREE: The wetted surfaces of this product shall contain no more than 0.25% lead by weighted average. Complies with Federal Public Law 111-380. ANSI 3rd party approved and listed.*

Apollo Valves, Manufactured by **Conbraco Industries, Inc.**
701 Matthews Mint-Hill Road, Matthews, NC 28105 USA
www.**apollovalves**.com | (704) 841-6000

This specification is provided for reference only. Conbraco Industries Inc. reserves the right to change any portion of this specification without notice and without incurring obligation to make such changes to Conbraco products previously or subsequently sold. Please visit our website @ www.apollovalves.com for the most current information.

AALBERTS INDUSTRIES

"Apollo" Valves

SUBMITTAL SHEET

LEAD FREE

77CLF Series

Bronze Full Port **Ball Valve**

NPT

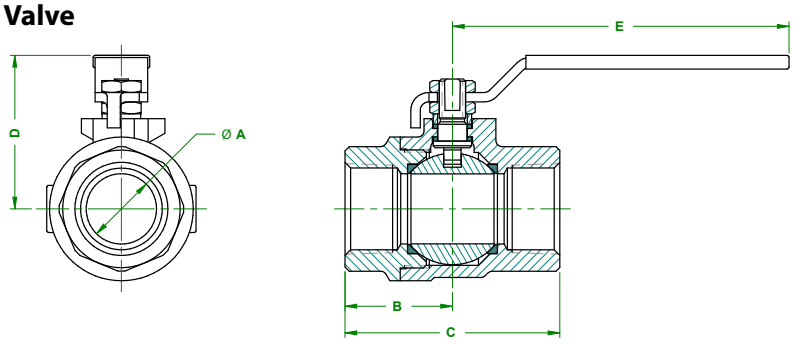

Solder

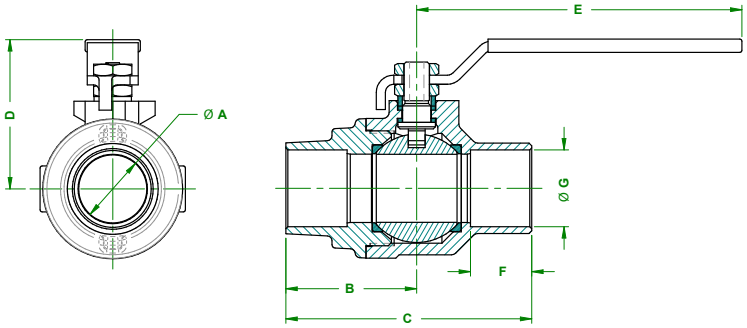

DIMENSIONS

LF Part Number	Size (in.)	Dimensions (in.)								Wt. *** (lbs.)
		A	B	C	D	E	F	G	Cv	
NPT										
77CLF-101-01	1/4"	0.37	0.95	1.97	1.76	3.74	-	-	4.5	0.6
77CLF-102-01	3/8"	0.37	1.07	2.09	1.76	3.74	-	-	7.2	0.6
77CLF-103-01	1/2"	0.50	1.15	2.25	1.79	3.74	-	-	15.5	0.6
77CLF-104-01	3/4"	0.75	1.32	2.65	2.00	4.88	-	-	35.6	1.1
77CLF-105-01	1"	1.00	1.53	3.07	2.19	4.88	-	-	68.1	1.8
77CLF-106-01	1-1/4"	1.25	2.04	4.08	3.13	7.06	-	-	125.0	4.4
77CLF-107-01	1-1/2"	1.50	2.12	4.23	3.29	7.06	-	-	177.0	4.6
77CLF-108-01	2"	2.00	2.43	4.85	3.83	7.06	-	-	389.0	7.9
77CLF-109-01	2-1/2"	2.50	3.12	6.37	4.51	8.06			503.0	16.2
SOLDER										
77CLF-202-01	3/8"	0.37	1.30	2.21	1.76	3.74	0.41	0.50	7.2	0.6
77CLF-203-01	1/2"	0.50	1.41	2.56	1.76	3.74	0.50	0.63	15.5	0.6
77CLF-204-01	3/4"	0.75	1.64	3.03	2.00	4.88	0.75	0.88	35.6	1.0
77CLF-205-01	1"	1.00	1.92	3.61	2.19	4.88	0.90	1.13	68.1	1.6
77CLF-206-01	1-1/4"	1.25	2.36	4.44	3.13	7.06	0.97	1.38	125.0	3.9
77CLF-207-01	1-1/2"	1.50	2.63	4.89	3.29	7.06	1.09	1.63	177.0	4.3
77CLF-208-01	2"	2.00	3.17	6.06	3.83	7.06	1.34	2.13	389.0	7.6
77CLF-209-01	2-1/2"	2.50	3.77	7.14	4.51	8.06	1.43	2.63	503.0	15.9

**** Weights based on Standard Configuration*

Apollo Valves, Manufactured by **Conbraco Industries, Inc.**
701 Matthews Mint-Hill Road, Matthews, NC 28105 USA
www.**apollovalves**.com | (704) 841-6000

This specification is provided for reference only. Conbraco Industries Inc. reserves the right to change any portion of this specification without notice and without incurring obligation to make such changes to Conbraco products previously or subsequently sold. Please visit our website @ www.apollovalves.com for the most current information.

AALBERTS INDUSTRIES

RUPERT

PLUMBING AND HEATING

PIPE FABRICATION

SUMP PUMP

Liberty Pumps®

250-Series

Cast Iron Submersible Sump/Effluent Pumps

1/3 hp
1-1/2" Discharge
1/2" Solids Handling

Available with Wide-Angle Switch

Features:

- Unique one-piece cast body eliminates motor housing seal ring
- Durable epoxy powder coat finish
- Vortex style impeller
- Permanently sealed and lubricated bearings
- Quick-disconnect 10' standard power cord allows replacement of cord in seconds without breaking seals to motor. (other lengths available)
- Heavy duty VMF switch on vertical float models

Models:

250 Manual

251 Wide-Angle Float

253 Wide-Angle Float, Series Plug

257 VMF, Vertical Magnetic Float

Wide-Angle Floats are mercury-free, mechanically activated.

innovate. evolve.

250-SERIES

1/3 hp Sump/Effluent Pumps for Professionals!

ALL MODELS FEATURE:

- Rugged 1/3 hp motor, oil filled with thermal overload protection.
- 1/2" solids handling.
- 1-1/2" discharge.
- Hermetically sealed motor and switch cavities, and permanently lubricated bearings.
- Liberty's UNI-BODY casting – a solid, one-piece housing that eliminates the lower motor seal ring found on other pumps.
- Epoxy powder coat finish
- Vortex style impeller for superior solids-handling. Made of high temperature engineering polymer.
- Fasteners – all non-corrosive stainless steel.
- 416 stainless steel rotor shaft.
- **250-series Cord Lengths**

Model	10'	25'(-2)	35'(-3)	50'(-5)
250	Standard	Optional	Optional	Optional
251	Standard	Optional	Optional	Optional
253	Standard	Optional	Optional	N/A
257	Standard	Optional	N/A	N/A

10' cord length standard on all models. For optional lengths, add "-2, -3 or -5" suffix to model number.
Example: for model 250 with 35' cord, order 250-3

MOTOR SPECIFICATIONS:

1/3 hp 115V 5.2 amps 60Hz
Thermally Protected & Permanently Lubricated

Maximum Fluid Temperature: 140°F

DIMENSIONAL DATA:

Weight: Model 257: 20 lbs.

Height: 10.5"

Major Width: 9.6" (manual model 250)

PERFORMANCE CURVE

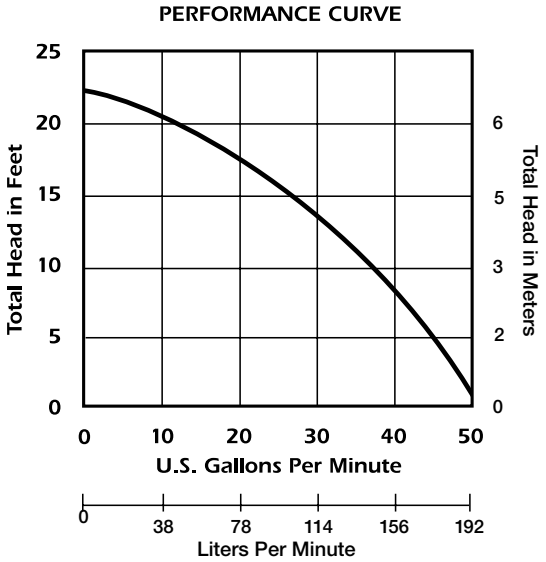

EFFLUENT MODELS

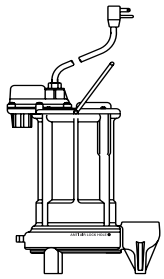

Model 250
Manual, no switch.

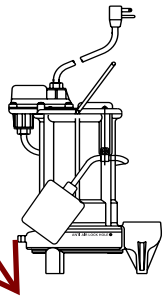

Model 251
Quick-disconnect wide-angle float, mercury-free.

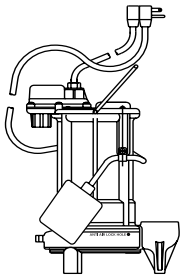

Model 253
Wide-angle float with series (piggy-back) plug, allows manual operation of pump.

SUMP

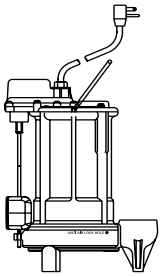

Model 257 VMF
VMF switch, magnetically operated vertical float – operates in a 10" diameter sump.

SSPMA Certified PUMP MEMBER ® C SA US Certified

Dual safety certification for the United States and Canada.

Specifications are subject to change without notice.

Liberty Pumps • 7000 Apple Tree Avenue • Bergen, New York 14416 • Phone 800-543-2550 Fax (585) 494-1839
www.libertypumps.com

Copyright © Liberty Pumps, Inc. 2015
All rights reserved. LLIT2500-R3/15

RUPERT

PLUMBING AND HEATING

PIPE FABRICATION

TANK VENT

REFERENCE DRAWING 140705-001-PI-03-400002.

MODEL # 4006-CR-6"

ENARDO Vents

Free Vents
Model 4000 & 4100

The Enardo Models 4000 and 4100 are designed to be used on tanks containing non-volatile liquids. Enardo Free Vents offer efficient flow capacity to protect the tank from positive or negative overpressure. They allow vapors to flow freely in and out of the storage tank.

The 4000 and 4100 are designed to protect against rain, dirt, insects and other foreign matter from entering the vent.

Available in aluminum, carbon steel and stainless steel.

Approved Equal to turn-down vent.

Model 4000

Model 4100

Features and Benefits

- Enardo Free Vents are built of corrrosion resistant materials. A wire mesh screen prevents foreign matter from entering the tank or pipe opening.
- Convient 150 lb. flange connections for quick and easy installation
- As with all Enardo products, every Enardo Free Vent is factory inspected to meet all critical requirements and special needs.
- Rugged forged design provides years of trouble free service life.
- Available in API, ANSI, DIN and JIS flanges.

Vent Flange Sizes

Model Numbers	Sizes Available mm (In.)
Series 4000 & Series 4100	50 (2), 80 (3), 100 (4), 150 (6), 200 (8), 250 (10), and 300 (12)

Materials of Construction

Materials Available
Aluminum, Carbon Steel, 304 Stainless Steel, 316 Stainless Steel, Special

ENARDO Vents

Free Vents
Model 4000 & 4100

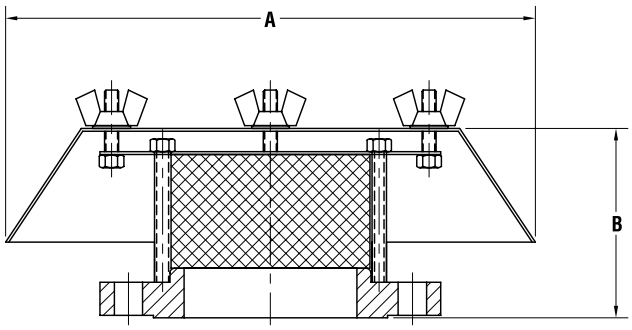

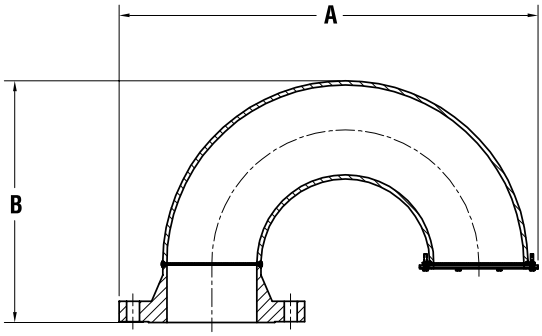

Model 4000 Dimensions and Weights

Model	150 Lb. Flange Size in. (mm)	A Width in. (mm)	B Height in. (mm)	Approx. Ship. Wt. lb. (kg)
4000	2 (50)	9 (228.6)	3-1/4 (82.5)	11 (5)
4000	3 (80)	9 (228.6)	3-1/4 (82.5)	14 (6.4)
4000	4 (100)	16-1/2 (419.1)	5 (127)	18 (8.2)
4000	6 (150)	16-1/2 (419.1)	5 (127)	28 (12.7)
4000	8 (200)	24-1/2 (662.3)	6-9/16 (166.7)	42 (19)
4000	10 (250)	24-1/2 (662.3)	6-9/16 (166.7)	60 (27.3)
4000	12 (300)	24-1/2 (662.3)	6-9/16 (166.7)	95 (43.2)

Larger sizes are available on special order.

Model 4100 Dimensions and Weights

Model	150 Lb. Flange Size in. (mm)	A Width in. (mm)	B Height in. (mm)	Approx. Ship. Wt. lb. (kg)
4100	2 (50)	11 (279.4)	6 (169.9)	8 (3.6)
4100	3 (80)	15-1/4 (387.4)	9 (228.6)	20 (9.1)
4100	4 (100)	19-1/2 (495.3)	11-1/4 (285.8)	35 (15.9)
4100	6 (150)	27-1/2 (698.5)	15-13/16 (401.6)	70 (31.8)
4100	8 (200)	35-3/4 (908.1)	20-5/16 (515.9)	135 (61.4)
4100	10 (250)	44 (1117.6)	24-3/8 (619.1)	235 (106.8)
4100	12 (300)	52-1/2 (1333.5)	27-7/8 (708)	350 (159)

Key to Enardo Series 4100 Free Vent Model Number

□ □ □ □ — □ □ — □

Series
40 = 4000
41 = 4100

Connection Size
2", 3", 4", 6", 8", 10" and 12" (50, 80, 100, 150, 200, 250, 300 mm)

Material
A. Aluminum
C. Carbon Steel
4. 304 Stainless Steel
6. 316 Stainless Steel
X. Special

Flange Type
F. Flat Face
R. Raised Face

Options
1. Protective Coating
2. Special Features

Example:

4 1 0 4 — C R — 1

Indicates a Free Vent with a 4" ANSI 150 lb. raised face flange connection made with carbon steel materials.

ENARDO • 4470 S. 70th East Ave. • Tulsa, OK 74145-4607 • 1-800-336-2736 U.S. and Canada • **www.enardo.com**

RUPERT

PLUMBING AND HEATING

PIPE FABRICATION

WYE STRAINER

"Y" Strainers

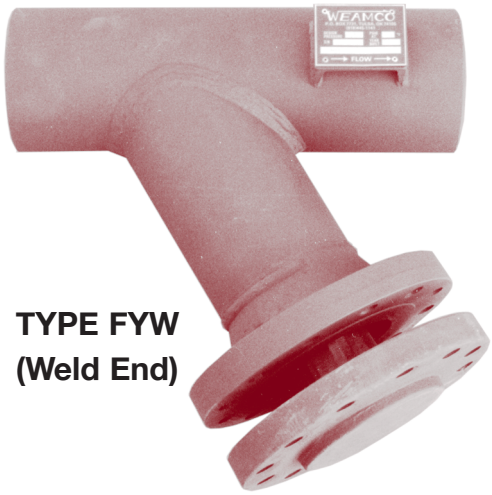

TYPE FYW
(Weld End)

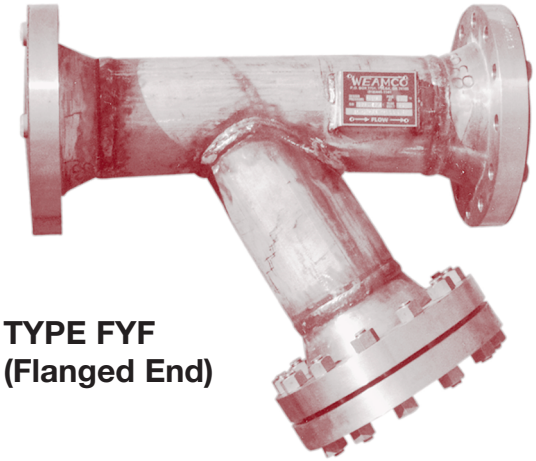

TYPE FYF
(Flanged End)

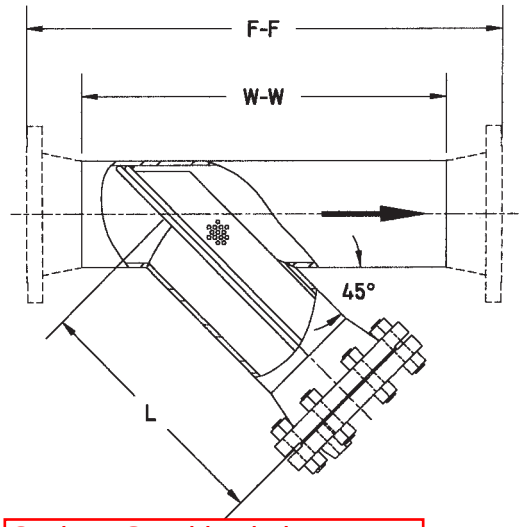

Carbon Steel body is approved equal to bronze body

SIZE	O.D.	TYPE FYW W-W	TYPE FYF F-F	L	BLOWDOWN (NPT)
4	4 1/2	18 1/2	26	12	3/4
6	6 5/8	20 1/4	30	16	3/4
8	8 5/8	26	37	20	1
10	10 3/4	33 1/2	46	23	1
12	12 3/4	38 1/4	51	26	1 1/2
14	14	42 1/2	56	29	1 1/2
16	16	47 1/2	62	32	1 1/2
18	18	53	68	36	1 1/2
20	20	57 1/2	73	39	2
24	24	63 1/2	80	43	2

Larger sizes on application

Dimensions are in inches.

WEAMCO "Y" Strainers can be fabricated from any commercially available pipe including carbon steel, low and intermediate alloy steels and stainless steel. The F-F dimensions shown for the Type FYF Strainer is applicable for any flange rating or facing 150# ANSI thru 300# ANSI. Higher pressures on application. Special Dimensions available to match your piping requirements.
Std. Design ASME/ANSI B31.4

INFORMATION REQUIRED

1. Quantity
2. Line Size
3. Weamco type
4. Flange Rating and Face
5. Housing material *
6. Housing Pipe Schedule
7. Basket material *
8. Mesh liner if required
9. Additional Features

*Carbon Steel is standard. Other materials are available.

EXAMPLE: 2 – 6" 300# RF WEAMCO type FYW, C.S. housing,
Std. Wt. 304 SS basket, 1" NPT blowdown, 300# R.F.

Standard Basket – Perforated 1/8" Diameter holes on 3/16" Centers

(Other Patterns, wire mesh and liners available,
see WEAMCO Bulletin AC 112 or Consult Factory)

WEAMCO METRIC
(918) 445-1141
(800) 331-3790
Fax: (918) 445-4617
sales@weamco.com
www.weamco.com

© Siemens AG 2011

Tags PIT-9013

Overview

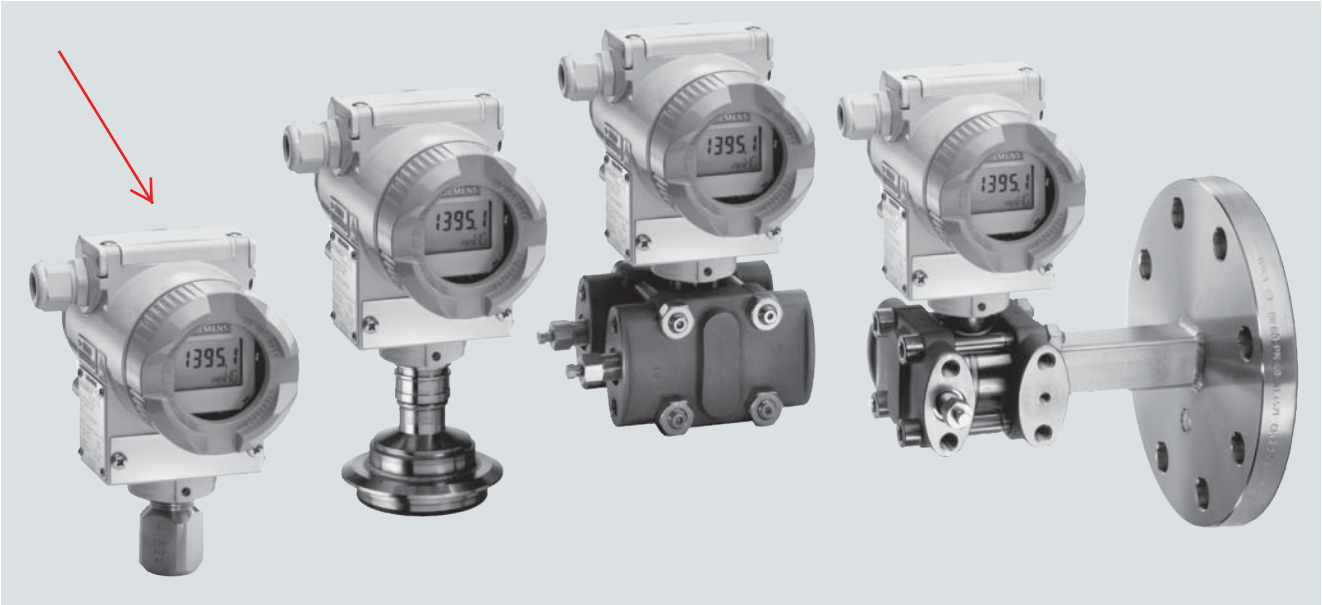

SITRANS P DS III pressure transmitters are digital pressure transmitters featuring extensive user-friendliness and high accuracy. The parameterization is performed using control keys or via HART communication, PROFIBUS-PA or FOUNDATION Fieldbus interface.

Extensive functionality enables the pressure transmitter to be precisely adapted to the plant's requirements. Operation is very simple in spite of the numerous setting options.

Transmitters with type of protection "Intrinsic safety" and "Explosion-proof" may be installed within potentially explosive atmospheres (zone 1) or in zone 0. The transmitters are provided with an EC type examination certificate and comply with the corresponding harmonized European standards (ATEX).

The transmitters can be equipped with various designs of remote seals for special applications such as the measurement of highly viscous substances.

Various versions of the DS III pressure transmitters are available for measuring:

- Gauge pressure
- Absolute pressure
- Differential pressure
- Level
- Volume level
- Mass level
- volume flow
- Mass flow

Benefits

- High quality and service life
- High reliability even under extreme chemical and mechanical loads
- For aggressive and non-aggressive gases, vapors and liquids
- Extensive diagnosis and simulation functions
- Separate replacement of measuring cell and electronics without recalibration
- Minimum conformity error
- Small long-term drift
- Wetted parts made of high-grade materials (e.g. stainless steel, Hastelloy, gold, Monel, tantalum)
- Infinitely adjustable span from 0.15 psi to 10153 psi (0.01 bar to 700 bar) for DS III with HART communication
- Nominal measuring range from 14.5 psi to 10153 psi (1 bar to 700 bar) for DS III PA (PROFIBUS PA) and FF (FOUNDATION Fieldbus)
- High measuring accuracy
- Parameterization over control keys and HART communication, PROFIBUS PA communication or FOUNDATION Fieldbus interface.

Application

The pressure transmitters of the DS III series, can be used in industrial areas with extreme chemical and mechanical loads. Electromagnetic compatibility in the range 10 kHz to 1 GHz makes the DS III pressure transmitters suitable for locations with high electromagnetic emissions.

Pressure transmitters with type of protection "Intrinsic safety" and "Explosion-proof" may be installed within potentially explosive atmospheres (zone 1) or in zone 0. The pressure transmitters are provided with an EC type examination certificate and comply with the corresponding harmonized European standards (ATEX).

Pressure transmitters with the type of protection "Intrinsic safety" for use in zone 0 may be operated with power supply units of category "ia" and "ib".

The transmitters can be equipped with various designs of remote seals for special applications such as the measurement of highly viscous substances.

The pressure transmitter can be operated locally over 3 control buttons or programmed externally over HART communication or over PROFIBUS PA or FOUNDATION Fieldbus interface.

© Siemens AG 2011

Pressure transmitter for gauge pressure

Measured variable: Gauge pressure of aggressive and non-aggressive gases, vapors and liquids.

Span (infinitely adjustable)
for DS III HART: 0.15 psi to 10153 psi (0.01 bar to 700 bar)

Nominal measuring range
for DS III PA and FF: 14.5 psi to 10153 psi (1 bar to 700 bar)

Pressure transmitters for absolute pressure

Measured variable: Absolute pressure of aggressive and non-aggressive gases, vapors and liquids.

Span (infinitely adjustable)
for DS III HART: 0.12 ... 1450 psi a (8.3 mbar a ... 100 bar a)

Nominal measuring range
for DS III PA and FF: 3.63...1450 psi a (250 mbar a...100 bar a)

There are two series:

- Gauge pressure series
- Differential pressure series

Pressure transmitters for differential pressure and flow

Measured variables:

- Differential pressure
- Small positive or negative pressure
- Flow q ~ $\sqrt{\Delta p}$ (together with a primary differential pressure device (see Chap.ter "Flow Meters"))

Span (infinitely adjustable)
for DS III HART: 0.0145 ... 435 psi (1 mbar ... 30 bar)

Nominal measuring range
for DS III PA and FF: 0.29 ... 435 psi (20 mbar ... 30 bar)

Pressure transmitters for level

Measured variable: Level of aggressive and non-aggressive liquids in open and closed vessels.

Span (infinitely adjustable)
for DS III HART: 0.363 ... 72.5 psi (25 mbar ... 5 bar)

Nominal measuring range
for DS III PA and FF: 3.63 ... 72.5 psi (250 mbar ... 5 bar)

Nominal diameter of the mounting flange

- DN 80 or DN 100
- 3 inch or 4 inch

In the case of level measurements in open containers, the low-pressure connection of the measuring cell remains open (measurement "compared to atmospheric").

In the case of measurements in closed containers, the lower-pressure connection has to be connected to the container in order to compensate the static pressure.

The wetted parts are made from a variety of materials, depending on the degree of corrosion resistance required.

Design

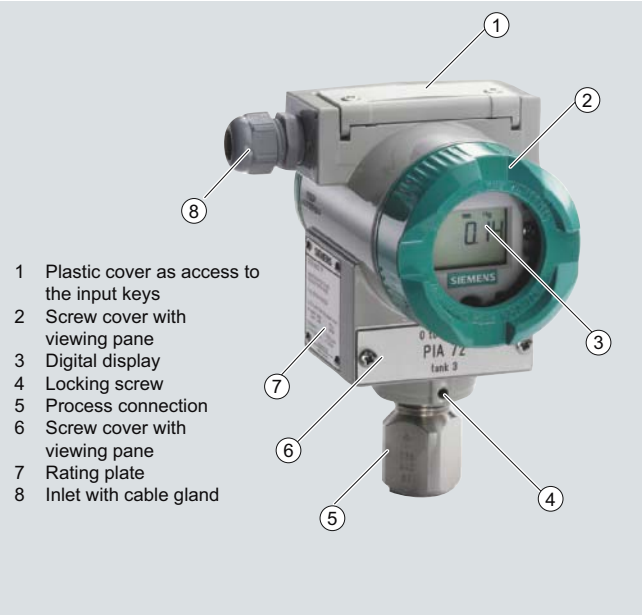

1 Plastic cover as access to the input keys
2 Screw cover with viewing pane
3 Digital display
4 Locking screw
5 Process connection
6 Screw cover with viewing pane
7 Rating plate
8 Inlet with cable gland

Front view

The transmitter consists of various components depending on the order. The possible versions are listed in the ordering information. The components described below are the same for all transmitters.

The rating plate (7, Figure "Front view") with the Order No. is located on the side of the housing. The specified number together with the ordering information provide details on the optional design details and on the possible measuring range (physical properties of built-in sensor element).

The approval label is located on the opposite side.

The housing is made of die-cast aluminium or stainless steel precision casting. A round cover (6) is screwed on at the front and rear of the housing. The front cover can be fitted with a viewing pane so that the measured values can be read directly on the digital display. The inlet (8) for the electrical connection is located either on the left or right side. The unused opening on the opposite side is sealed by a blanking plug. The protective earth connection is located on the rear of the housing.

The electrical connections for the power supply and screen are accessible by unscrewing the rear cover. The bottom part of the housing contains the measuring cell with process connection (5). The measuring cell is prevented from rotating by a locking screw (4). As the result of this modular design, the measuring cell and the electronics can be replaced separately from each other. The set parameter data are retained.

At the top of the housing is a plastic cover (1), which hides the input keys.

Example for an attached measuring point label

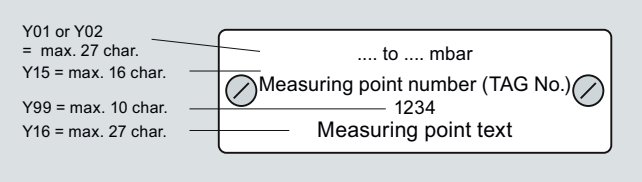

© Siemens AG 2011

2

Function

Operation of electronics with HART communication

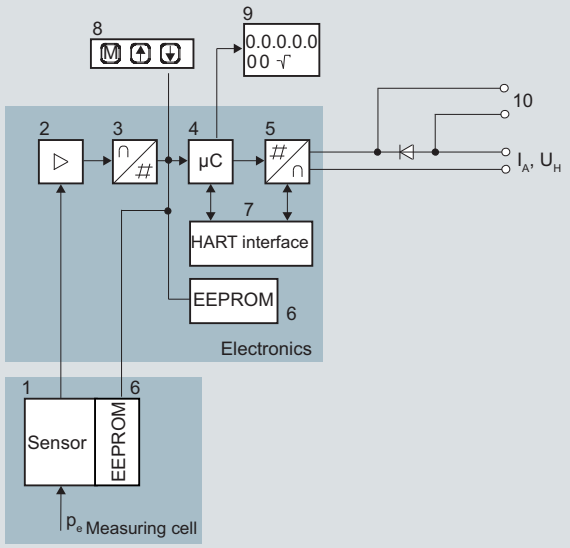

1 Measuring cell sensor
2 Instrument amplifier
3 Analog-to-digital converter
4 Microcontroller
5 Digital-to-analog converter
6 One non-volatile memory each in the measuring cell and electronics
7 HART interface
8 Three input keys (local operation)
9 Digital display
10 Diode circuit and connection for external ammeter
I_A Output current
U_H Power supply
P_e Input variable

Function diagram of electronics

The bridge output voltage created by the sensor (1, Figure "Function diagram of the electronics") is amplified by the measuring amplifier (2) and digitized in the analog-to-digital converter (3). The digital information is evaluated in a microcontroller, its linearity and temperature response corrected, and converted in a digital-to-analog converter (5) into an output current of 4 to 20 mA.

The diode circuit (10) protects against incorrect polarity.

The data specific to the measuring cell, the electronics data, and the parameter data are stored in the two non-volatile memories (6). The one memory is coupled to the measuring cell, the other to the electronics. As the result of this modular design, the electronics and the measuring cell can be replaced separately from each other.

Using the 3 input keys (8) you can parameterize the pressure transmitter directly at the measuring point. The input buttons can also be used to control the view of the results, the error messages and the operating modes on the digital display (9).

The HART modem (7) permits parameterization using a protocol according to the HART specification.

The pressure transmitters with spans ≤ 63 bar measure the input pressure compared to atmosphere, transmitters with spans ≥ 160 bar compared to vacuum.

Operation of electronics with PROFIBUS PA communication

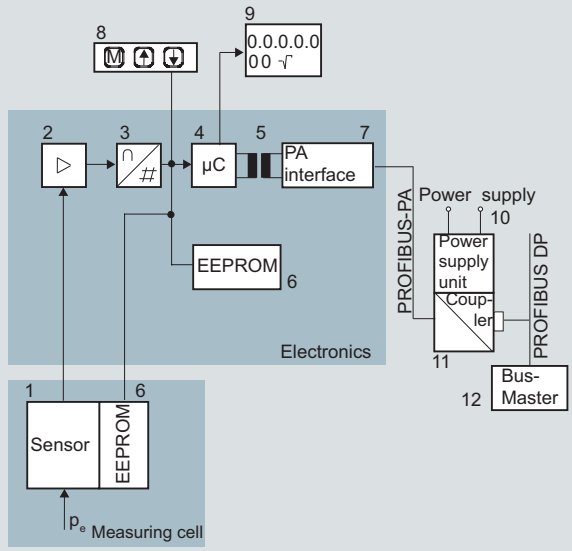

1 Measuring cell sensor
2 Instrument amplifier
3 Analog-to-digital converter
4 Microcontroller
5 Electrical isolation
6 One non-volatile memory each in the measuring cell and electronics
7 PROFIBUS-PA interface
8 Three input keys (local operation)
9 Digital display
10 Power supply
11 DP/PA coupler or link
12 Bus master
p_e Input variable

Function diagram of electronics

The bridge output voltage created by the sensor (1, Figure "Function diagram of the electronics") is amplified by the measuring amplifier (2) and digitized in the analog-to-digital converter (3). The digital information is evaluated in the microcontroller, its linearity and temperature response corrected, and provided on the PROFIBUS PA through an electrically isolated PA interface (7).

The data specific to the measuring cell, the electronics data, and the parameter data are stored in the two non-volatile memories (6). The one memory is coupled to the measuring cell, the other to the electronics. As the result of this modular design, the electronics and the measuring cell can be replaced separately from each other.

Using the three input buttons (8) you can parameterize the pressure transmitter directly at the measuring point. The input buttons can also be used to control the view of the results, the error messages and the operating modes on the digital display (9).

The results with status values and diagnostic values are transferred by cyclic data transmission on the PROFIBUS PA. Parameterization data and error messages are transferred by acyclic data transmission. Special software such as SIMATIC PDM is required for this.

© Siemens AG 2011

Operation of electronics with FOUNDATION Fieldbus communication

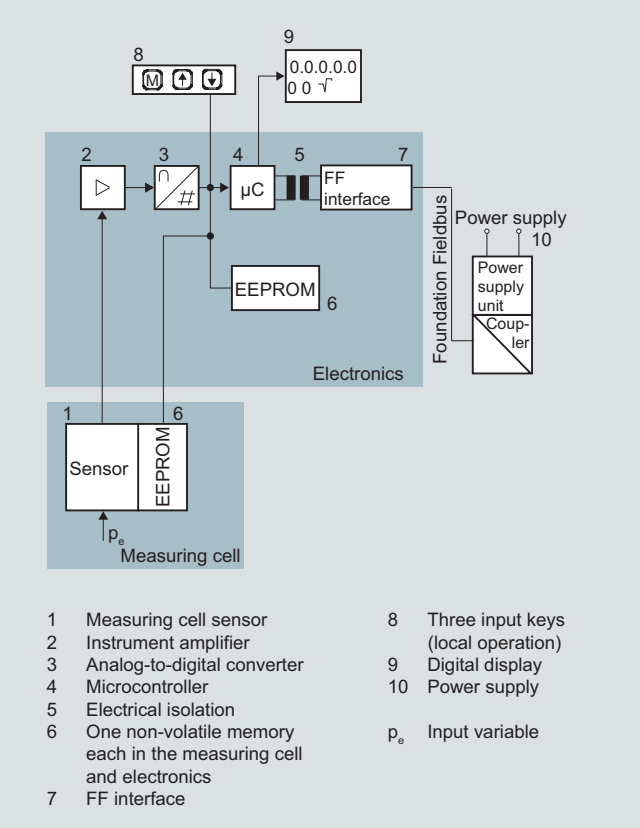

Function diagram of electronics

The bridge output voltage created by the sensor (1, Figure "Function diagram of electronics") is amplified by the measuring amplifier (2) and digitized in the analog-to-digital converter (3). The digital information is evaluated in the microcontroller, its linearity and temperature response corrected, and provided on the FOUNDATION Fieldbus through an electrically isolated FOUNDATION Fieldbus interface (7).

The data specific to the measuring cell, the electronics data, and the parameter data are stored in the two non-volatile memories (6). The one memory is coupled to the measuring cell, the other to the electronics. As a result of this modular design, the electronics and the measuring cell can be replaced separately from each other.

Using the three input buttons (8) you can parameterize the pressure transmitter directly at the measuring point. The input buttons can also be used to control the view of the results, the error messages and the operating modes on the digital display (9).

The results with status values and diagnostic values are transferred by cyclic data transmission on the FOUNDATION Fieldbus. Parameterization data and error messages are transferred by acyclic data transmission. Special software such as National Instruments Configurator is required for this.

Mode of operation of the measuring cells

Measuring cell for gauge pressure

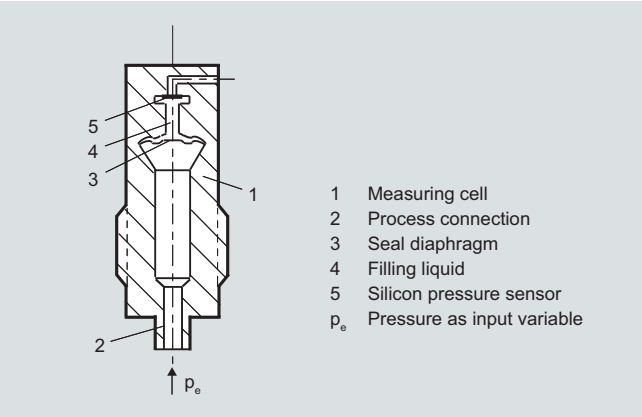

Measuring cell for gauge pressure, function diagram

The pressure p_e is applied through the process connection (2, Figure "Measuring cell for gauge pressure, function diagram) to the measuring cell (1). This pressure is subsequently transmitted further through the seal diaphragm (3) and the filling liquid (4) to the silicon pressure sensor (5) whose measuring diaphragm is then flexed. This changes the resistance of the four piezo-resistors fitted in the diaphragm in a bridge circuit. This change in resistance results in a bridge output voltage proportional to the absolute pressure.

Measuring cell for gauge pressure with front-flush diaphragm

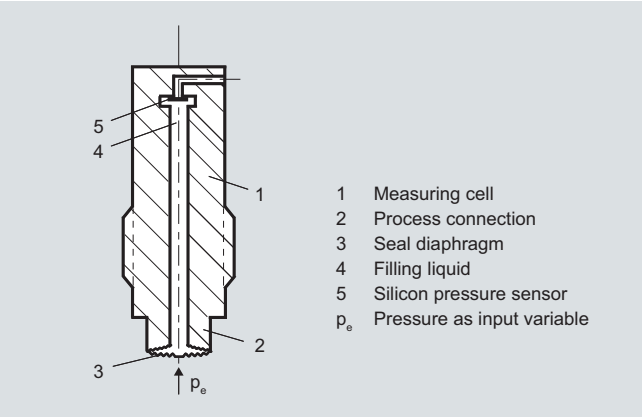

Measuring cell for gauge pressure, with front-flush diaphragm for paper industry, function diagram

The pressure $_p$e is applied through the process connection (2, Figure "Measuring cell for gauge pressure, with front-flush diaphragm for paper industry, function diagram") to the measuring cell (1). This pressure is subsequently transmitted further through the seal diaphragm (3) and the filling liquid (4) to the silicon pressure sensor (5) whose measuring diaphragm is then flexed. This changes the resistance of the four piezo-resistors fitted in the diaphragm in a bridge circuit. This change in resistance results in a bridge output voltage proportional to the absolute pressure.

© Siemens AG 2011

Measuring cell for absolute pressure from gauge pressure series

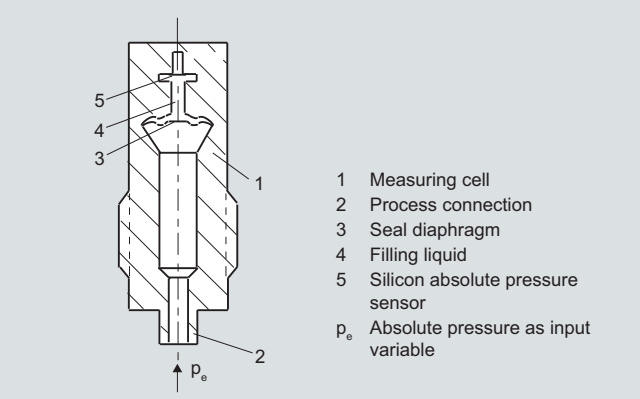

Measuring cell for absolute pressure from the pressure series, function diagram

The absolute pressure $_p$e is transmitted through the seal diaphragm (3, Figure "Measuring cell for absolute pressure from pressure series, gauge pressure, function diagram ") and the filling liquid (4) to the silicon absolute pressure sensor (5) whose measuring diaphragm is then flexed. This changes the resistance of the four piezo-resistors fitted in the diaphragm in a bridge circuit. This change in resistance results in a bridge output voltage proportional to the absolute pressure.

Measuring cell for absolute pressure from differential pressure series

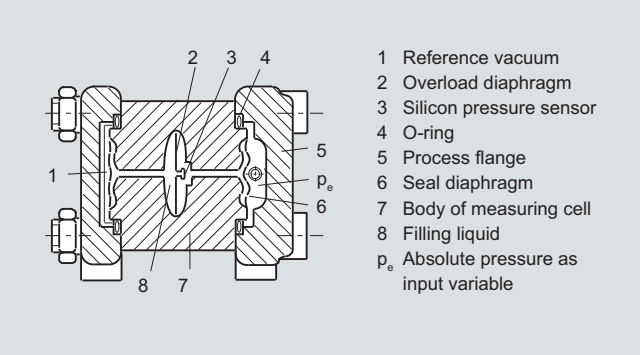

Measuring cell for absolute pressure from differential pressure series, function diagram

The input pressure p_e is transmitted through the seal diaphragm (6, Figure "Measuring cell for absolute pressure from differential pressure series, function diagram") and the filling liquid (8) to the silicon pressure sensor (3).

The difference in pressure between the input pressure p_e and the reference vacuum (1) on the low-pressure side of the measuring cell flexes the measuring diaphragm. This changes the resistance of the four piezo-resistors fitted in the diaphragm in a bridge circuit. This change in resistance results in a bridge output voltage proportional to the absolute pressure.

An overload diaphragm is installed to provide protection from overloads. If the measuring limits are exceeded, the overload diaphragm (2) is flexed until the seal diaphragm rests on the body of the measuring cell (7), thus protecting the silicon pressure sensor from overloads.

Measuring cell for differential pressure and flow

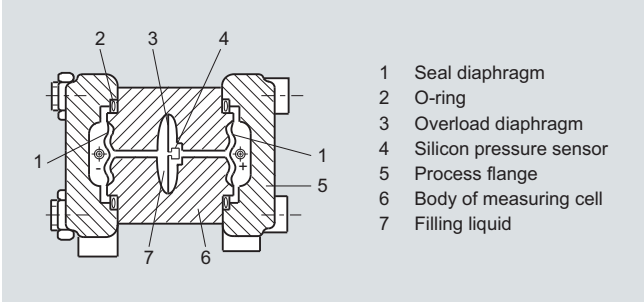

Measuring cell for differential pressure and flow, function diagram

The differential pressure is transmitted through the seal diaphragms (1, Figure "Measuring cell for differential pressure and flow, function diagram") and the filling liquid (7) to the silicon pressure sensor (4).

The measuring diaphragm is flexed by the applied differential pressure. This changes the resistance of the four piezo-resistors fitted in the diaphragm in a bridge circuit. This change in resistance results in a bridge output voltage proportional to the absolute pressure.

An overload diaphragm is installed to provide protection from overloads. If the measuring limits are exceeded, the overload diaphragm (2) is flexed until the seal diaphragm rests on the body of the measuring cell (7), thus protecting the silicon pressure sensor from overloads.

Measuring cell for level

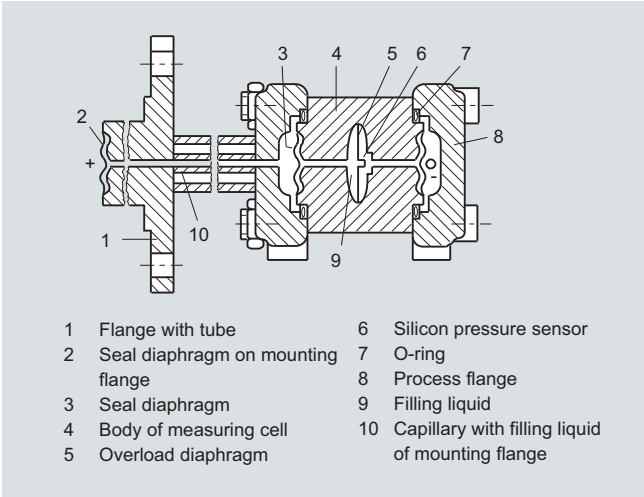

Measuring cell for level, function diagram

The input pressure (hydrostatic pressure) acts hydraulically on the measuring cell through the seal diaphragm on the mounting flange (2, Figure "Measuring cell for level, function diagram"). This differential pressure is subsequently transmitted further through the measuring cell (3) and the filling liquid (9) to the silicon pressure sensor (6) whose measuring diaphragm is then flexed.

This changes the resistance of the four piezo-resistors fitted in the diaphragm in a bridge circuit.

This change in resistance results in a bridge output voltage proportional to the differential pressure.

An overload diaphragm is installed to provide protection from overloads. If the measuring limits are exceeded, the overload diaphragm (2) is flexed until the seal diaphragm rests on the body of the measuring cell (7), thus protecting the silicon pressure sensor from overloads.

© Siemens AG 2011

Parameterization DS III

Depending on the version, there are a range of options for parameterizing the pressure transmitter and for setting or scanning the parameters.

Parameterization using the pushbuttons (local operation)

With the input buttons you can easily set the most important parameters without any additional equipment.

Parameterization using HART communication

Parameterization using HART communication is performed with a HART communicator or a PC.

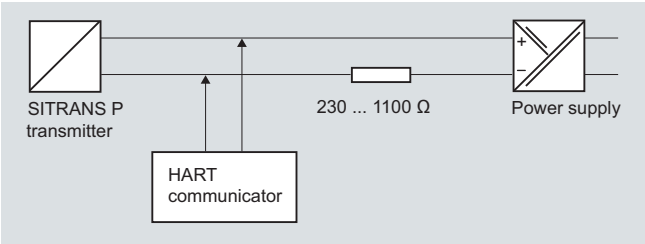

Communication between a HART communicator and a pressure transmitter

When parameterizing with the HART communicator, the connection is made directly to the 2-wire cable.

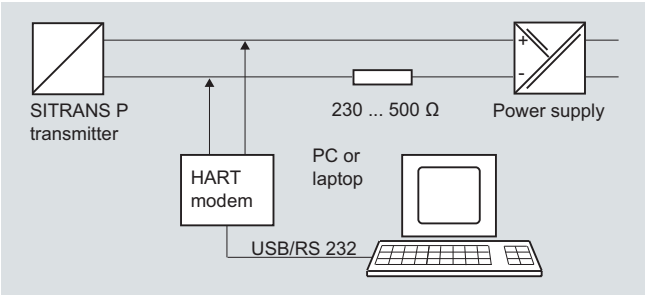

HART communication between a PC communicator and a pressure transmitter

When parameterizing with a PC, the connection is made through a HART modem.

The signals needed for communication in conformity with the HART 5.x or 6.x protocols are superimposed on the output current using the Frequency Shift Keying (FSK) method.

Adjustable parameters, DS III HART

Parameters	Pushbuttons (DS III HART)	HART communication
Start of scale	x	x
Full-scale value	x	x
Electrical damping	x	x
Start-of-scale value without application of a pressure ("Blind setting")	x	x
Full-scale value without application of a pressure ("Blind setting")	x	x
Zero adjustment	x	x
current transmitter	x	x
Fault current	x	x
Disabling of buttons, write protection	x	x[1)]
Type of dimension and actual dimension	x	x
Linear or square root output	x[2)]	x[2)]
Characterizer setup		x
Freely-programmable LCD		x
Diagnostic functions		x

1) Cancel apart from write protection
2) Only differential pressure

Diagnostic functions for DS III HART

- Zero correction for position
- Event counter
- Transmitter alarms
- Saturation alarm
- Min/Max registers
- Simulation functions
- Maintenance timer

Available physical units of display for DS III HART

Table style: Technical specifications 2

Physical variable	Physical dimensions
Pressure (setting can also be made in the factory)	Pa, MPa, kPa, bar, mbar, torr, atm, psi, g/cm^2, kg/cm^2, inH$_2$O, inH$_2$O (4 °C), mmH$_2$O, ftH$_2$O (20 °C), inHg, mmHg
Level (height data)	m, cm, mm, ft, in
Volume	m^3, dm^3, hl, yd^3, ft^3, in^3, US gallon, Imp. gallon, bushel, barrel, barrel liquid
Mass	g, kg, t, lb, Ston, Lton, oz
volume flow	m^3/d, m^3/h, m^3/s, l/min, l/s, ft^3/d, ft^3/min, ft^3/s, US gallon/min, US gallon/s
Mass flow	t/d, t/h, t/min, kg/d, kg/h, kg/min, kg/s, g/d, g/h, g/min, g/s, lb/d, lb/h, lb/min, lb/s, LTon/d, LTon/h, STon/d, STon/h, STon/min
Temperature	K, °C, °F, °R
Miscellaneous	%, mA

Parameterization through PROFIBUS PA interface

Fully digital communication through PROFIBUS PA, profile 3.0, is particularly user-friendly. The PROFIBUS puts the DS III PA is in connection with a process control system, e.g. SIMATIC PSC 7. Communication is possible even in a potentially explosive environment.

For parameterization through PROFIBUS you need suitable software, e.g. SIMATIC PDM (Process Device Manager).

Parameterization through FOUNDATION Fieldbus interface

Fully digital communication through FOUNDATION Fieldbus is particularly user-friendly. Through the FOUNDATION Fieldbus the DS III FF is connected to a process control system. Communication is possible even in a potentially explosive environment.

For parameterization through the FOUNDATION Fieldbus you need suitable software, e.g. National Instruments Configurator.

Adjustable parameters for DS III PA and FF

Parameters	Push-buttons	PROFIBUS PA and FOUNDATION Fieldbus interface
Electrical damping	x	x
Zero adjustment (correction of position)	x	x
Buttons and/or function disabling	x	x
Source of measured-value display	x	x
Physical dimension of display	x	x
Position of decimal point	x	x
Bus address	x	x
Linear or square root output	x	x
Characterizer setup		x
Freely-programmable LCD		x
Diagnostics functions		x

© Siemens AG 2011

Diagnostic functions for DS III PA and FF

- Event counter
- Min/Max registers
- Maintenance timer
- Simulation functions
- Zero correction for position
- Transmitter alarms
- Saturation alarm

Physical dimensions available for the display

Physical variable	Physical dimensions
Pressure (setting can also be made in the factory)	MPa, kPa, Pa, bar, mbar, torr, atm, psi, g/cm^2, kg/cm^2, mmH_2O, mmH_2O (4 °C), inH_2O, in$H_2$0 (4 °C), ftH_2O (20 °C), mmHg, inHg
Level (height data)	m, cm, mm, ft, in, yd
Volume	m^3, dm^3, hl, yd^3, ft^3, in^3, US gallon, Imp. gallon, bushel, barrel, barrel liquid
volume flow	m^3/s, m^3/min, m^3/h, m^3/d, l/s, l/min, l/h, l/d, Ml/d, ft^3/s, ft^3/min, ft^3/h, ft^3/d, US gallon/s, US gallon/min, US gallon/h, US gallon/d, bbl/s, bbl/min, bbl/h, bbl/d
Mass flow	g/s, g/min, g/h, g/d, kg/s, kg/min, kg/h, kg/d, t/s, t/min, t/h, /t/d, lb/s, lb/min, lb/h, lb/d, STon/s, STon/min, STon/h, STon/d, LTon/s, LTon/min, LTon/h, LTon/d
Total mass flow	t, kg, g, lb, oz, LTon, STon
Temperature	K, °C, °F, °R
Miscellaneous	%

© Siemens AG 2015

Selection and Ordering data

Selection and Ordering data		Article No.
Pressure transmitter for gauge pressure, SITRANS P DS III with HART		↗ 7MF4033-
↗ Click on the Article No. for the online configuration in the PIA Life Cycle Portal.		
Measuring cell filling	**Measuring cell cleaning**	
Silicone oil	normal	1
Inert liquid[1]	grease-free to cleanliness level 2	3
Measuring span (min. ... max.)		
0.01 ... 1 bar	(0.15 ... 14.5 psi)	B
0.04 ... 4 bar	(0.58 ... 58 psi)	C
0.16 ... 16 bar	(2.32 ... 232 psi)	D
0.63 ... 63 bar	(9.14 ... 914 psi)	E
1.6 ... 160 bar	(23.2 ... 2320 psi)	F
4.0 ... 400 bar	(58.0 ... 5802 psi)	G
7.0 ... 700 bar	(102.0 ...10153 psi)	J
Wetted parts materials		
Seal diaphragm	Process connection	
Stainless steel	Stainless steel	A
Hastelloy	Stainless steel	B
Hastelloy	Hastelloy	C
Version as diaphragm seal [2) 3) 4) 5)]		Y
Process connection		
• Connection shank G½B to EN 837-1		0
• Female thread ½-14 NPT		1
• Stainless steel oval flange with process connection (Oval flange has no female thread)		
- Mounting thread $^{7}/_{16}$-20 UNF to IEC 61518		2
- Mounting thread M10 to DIN 19213		3
- Mounting thread M12 to DIN 19213		4
• Male thread M20 x 1.5		5
• Male thread ½ -14 NPT		6
Non-wetted parts materials		
• Housing made of die-cast aluminium		0
• Housing stainless steel precision casting[6]		3
Version		
• Standard versions		1
• International version, English label inscriptions, documentation in 5 languages on CD (no Order code selectable)		2
Explosion protection		
• None		A
• With ATEX, Type of protection:		
- "Intrinsic safety (Ex ia)"		B
- "Explosion-proof (Ex d)"[7]		D
- "Intrinsic safety and flameproof enclosure" (Ex ia + Ex d)"[8]		P
- "Ex nA/ic (Zone 2)"[9]		E
- "Intrinsic safety, explosion-proof enclosure and dust explosion protection (Ex ia + Ex d + Zone 1D/2D)"[8][10]		R
• FM + CSA intrinsic safe (is)		F
• FM + CSA (is + ep) + Ex ia + Ex d (ATEX)[10]		S
• With FM + CSA, Type of protection:		
- "Intrinsic Safe und Explosion Proof (is + xp)"[7]		N C
Electrical connection / cable entry		
• Screwed gland Pg 13.5 (adapter)[11]		A
• Screwed gland M20 x1 .5		B
• Screwed gland ½-14 NPT		C
• Han 7D plug (plastic housing) incl. mating connector[11]		D
• M12 connectors (stainless steel)[11][12]		F

Selection and Ordering data	Article No.
Pressure transmitter for gauge pressure, SITRANS P DS III with HART	7MF4033-
Display	
• Without display	0
• Without visible display (display concealed, setting: mA)	1
• With visible display (setting: mA)	6
• with customer-specific display (setting as specified, Order code "Y21" or "Y22" required)	7

Power supply units see Chap. 7 "Supplementary Components".

Included in delivery of the device:
- Brief instructions (Leporello)
- CD-ROM with detailed documentation

1) For oxygen application, add Order code E10.

2) When the manufacture's certificate (calibration certificate) has to be ordered for transmitters with diaphragm seals according to IEC 60770-2, it is recommended only to order this certificate exclusively with the diaphragm seals. The measuring accuracy of the total combination is certified here.

3) If the acceptance test certificate 3.1.is ordered for the transmitter with mounted diaphragm seals this certificate must also be ordered with the respective remote seals.

4) The diaphragm seal is to be specified with a separate order number and must be included with the transmitter order number, for example 7MF403.-..Y..-.... and 7MF4900-1...-.B

5) The standard measuring cell filling of configurations with remote seals (Y) is silicone oil.

6) Not in conjunction with Electrical connection "Screwed gland Pg 13.5" and "Han7D plug".

7) Without cable gland, with blanking plug

8) With enclosed cable gland Ex ia and blanking plug

9) Configurations with HAN and M12 connectors are only available in Ex ic.

10) Only in connection with IP65.

11) Only in connection with Ex approval A, B or E.

12) M12 delivered without cable socket

Tags LT-9010

In-Situ

Innovations in **Water Monitoring**

Spec Sheet

Level TROLL® 400, 500 & 700 Data Loggers

Get water level data the way you want it, when you want it with industry-leading water level/pressure and temperature data loggers. By partnering with In-Situ, you receive durable Level TROLL® Data Loggers that provide years of service, accurate results, intuitive software, and real-time functionality.

Be Effective

- **Increase productivity:** Reduce training and installation time with In-Situ intuitive software platform and integrated components. Patented twist-lock connectors, included on Level TROLL Loggers and RuggedCable® Systems, ensure error-free deployments.
- **Streamline analysis and reporting:** Automate water level corrections and post-processing, graph data, and accelerate report generation with Win-Situ® Software. Easily export data to Excel,® a web-based management service, or data analysis software.
- **Set up real-time networks:** Access data 24/7 and receive event notifications when you connect data loggers to Tube and Cube systems, radios, or other third-party data collection platforms. Get decision quality data when, where, and how you need it with HydroVu Data Services. Control gates, pumps, alarms, and other equipment by using built-in Modbus/RS485, SDI-12, or 4-20 mA communication protocols.

Be Reliable

- **Deploy in all environments:** Install loggers in fresh water, saltwater, and contaminated waters. Solid titanium and sealed construction outperforms and outlasts coated data loggers.
- **Log accurate data:** Get optimal accuracy under all operating conditions. Sensors undergo NIST®-traceable factory calibration across the full pressure and temperature range. For applications requiring the highest levels of accuracy, use a vented (gauged) system.
- **Get long-lasting operation:** Reduce trips to the field with low-power loggers that typically operate for 10 years.

Be In-Situ

- Receive **free**, 24/7 technical support and online resources.
- Order data loggers and accessories from the In-Situ website.
- Get guaranteed 7-day service for maintenance (U.S.A. only).

Applications

- **Aquifer characterization: slug tests & pumping tests**
- **Coastal: tide/harbor levels & wetland/estuary research**
- **Hydrologic events: crest stage gages, storm surge monitoring, & flood control systems**
- **Long-term, real-time groundwater & surface water monitoring**
- **Mining & remediation**

CALL OR CLICK TO PURCHASE OR RENT

1-800-446-7488 (toll-free in U.S.A. and Canada)
1-970-498-1500 (U.S.A. and international)

WWW.IN-SITU.COM

General	Level TROLL 400	Level TROLL 500	Level TROLL 700	Level BaroTROLL
Temperature ranges[1]	Operational: -20-80° C (-4-176° F) Storage: -40-80° C (-40-176° F) Calibrated: -5-50° C (23-122° F)	Operational: -20-80° C (-4-176° F) Storage: -40-80° C (-40-176° F) Calibrated: -5-50° C (23-122° F)	Operational: -20-80° C (-4-176° F) Storage: -40-80° C (-40-176° F) Calibrated: -5-50° C (23-122° F)	Operational: -20-80° C (-4-176° F) Storage: -40-80° C (-40-176° F) Calibrated: -5-50° C (23-122° F)
Diameter	1.83 cm (0.72 in.)	1.83 cm (0.72 in.)	1.83 cm (0.72 in.)	1.83 cm (0.72 in.)
Length	21.6 cm (8.5 in.)	21.6 cm (8.5 in.)	21.6 cm (8.5 in.)	21.6 cm (8.5 in.)
Weight	197 g (0.43 lb)	197 g (0.43 lb)	197 g (0.43 lb)	197 g (0.43 lb)
Materials	Titanium body; Delrin® nose cone	Titanium body; Delrin nose cone	Titanium body; Delrin nose cone	Titanium body; Delrin nose cone
Output options	Modbus/RS485, SDI-12, 4-20 mA	Modbus/RS485, SDI-12, 4-20 mA	Modbus/RS485, SDI-12, 4-20 mA	Modbus/RS485, SDI-12, 4-20 mA
Battery type & life[2]	3.6V lithium; 10 years or 2M readings	3.6V lithium; 10 years or 2M readings	3.6V lithium; 10 years or 2M readings	3.6V lithium; 10 years or 2M readings
External power	8-36 VDC	8-36 VDC	8-36 VDC	8-36 VDC
Memory	2.0 MB	2.0 MB	4.0 MB	1.0 MB
Data records[3] *Data logs*	130,000 50 logs	130,000 50 logs	260,000 50 logs	65,000 2 logs
Fastest logging rate	2 per second	2 per second	4 per second	1 per minute
Fastest output rate	Modbus: 2 per second SDI-12 & 4-20 mA: 1 per second	Modbus: 2 per second SDI-12 & 4-20 mA: 1 per second	Modbus: 2 per second SDI-12 & 4-20 mA: 1 per second	Modbus: 2 per second SDI-12 & 4-20 mA: 1 per second
Log types	Linear, Fast Linear, and Event	Linear, Fast Linear, and Event	Linear, Fast Linear, Linear Average, Event, Step Linear, True Logarithmic	Linear
Sensor Type/Material	**Piezoresistive; titanium**	**Piezoresistive; titanium**	**Piezoresistive; titanium**	**Piezoresistive; titanium**
Range	Absolute (non-vented) 30 psia: 11 m (35 ft) 100 psia: 60 m (197 ft) 300 psia: 200 m (658 ft) 500 psia: 341 m (1120 ft)	Gauged (vented) 5 psig: 3.5 m (11.5 ft) 15 psig: 11 m (35 ft) 30 psig: 21 m (69 ft) 100 psig: 70 m (231 ft) 300 psig: 210 m (692 ft) 500 psig: 351 m (1153 ft)	Absolute (non-vented) 30 psia: 11 m (35 ft) 100 psia: 60 m (197 ft) 300 psia: 200 m (658 ft) 500 psia: 341 m (1120 ft) 1000 psia: 693 m (2273 ft) Gauged (vented) 5 psig: 3.5 m (11.5 ft) 15 psig: 11 m (35 ft) 30 psig: 21 m (69 ft) 100 psig: 70 m (231 ft) 300 psig: 210 m (692 ft) 500 psig: 351 m (1153 ft)	30 psia (usable up to 16.5 psi; 1.14 bar)
Accuracy[4]	±0.05% full scale (FS) ±0.1% FS	±0.05% FS ±0.1% FS	±0.05% FS ±0.1% FS	±0.05% FS ±0.1% FS
Resolution	±0.005% FS or better	±0.005% FS or better	±0.005% FS or better	±0.005% FS or better
Units of measure	Pressure: psi, kPa, bar, mbar, mmHg, inHg, cmH20, inH20 Level: in., ft, mm, cm, m	Pressure: psi, kPa, bar, mbar, mmHg, inHg, cmH20, inH20 Level: in., ft, mm, cm, m	Pressure: psi, kPa, bar, mbar, mmHg, inHg, cmH20, inH20 Level: in., ft, mm, cm, m	Pressure: psi, kPa, bar, mbar, mmHg, inHg, cmH20, inH20
Temperature Sensor	**Silicon**	**Silicon**	**Silicon**	**Silicon**
Accuracy	±0.1° C	±0.1° C	±0.1° C	±0.1° C
Resolution	0.01° C or better	0.01° C or better	0.01° C or better	0.01° C or better
Units of measure	Celsius or Fahrenheit	Celsius or Fahrenheit	Celsius or Fahrenheit	Celsius or Fahrenheit
Warranty	**3 years**	**3 years**	**3 years**	**3 years**
Notes	[1] Temperature range for non-freezing liquids. [2] Typical battery life when used within the factory-calibrated temperature range. [3] 1 data record = date/time plus 2 parameters logged (no wrapping) from device within the factory-calibrated temperature range. [4] Across factory-calibrated pressure range. [5] Across factory-calibrated pressure and temperature ranges. [6] Up to 5-year (total) extended warranties are available for all sensors—call for details. Delrin is a registered trademark of E.I. du Pont de Nemours and Company. Specifications are subject to change without notice.			

Every Application & Budget

Use maintenance-free, non-vented systems for long-term monitoring and at flood-prone or high-humidity sites. Pair with Tube and Cube Telemtry System and HydroVu for automtatic barometric compensation.

Use high-accuracy, vented systems to conduct aquifer tests and to view barometrically compensated water level data in real time.

Forgot to set a level reference at the beginning of a deployment? Automate level corrections by using Win-Situ Software's post-level correction Wizard.

BaroTROLL® Data Logger

When using a non-vented system, collect barometric pressure and temperature data with a titanium BaroTROLL Data Logger in order to post correct data for barometric pressure fluctuations.

Calculating barometric efficiency? Use the BaroTROLL Logger with vented systems.

Copyright © 2013 In-Situ Inc. All rights reserved. Nov. 2015 (T3; 2K)

Tags LT-9010

In-Situ Inc.

Innovations in Water Monitoring

In-Situ® RuggedCable® Systems

Durable, Direct-Read Cable

RuggedCable Systems are custom-built to endure harsh environments and to last for years. RuggedCable Systems include:

- Titanium twist-lock connectors for quick, reliable connections to instrument body, TROLL® Com Communication Device, desiccant, and other accessories (2-year warranty)
- Metal shield beneath the cable jacket to prevent electrical interferences
- Kellems® grip for secure instrument deployment
- Small desiccant for vented systems (only for storage)

Use RuggedCable Systems with:

- Aqua TROLL® 100, 200, and 400 Instruments
- BaroTROLL® Instruments
- Con TROLL® PRO System
- Level TROLL® 300, 500, and 700 Instruments
- RDO® PRO Probe (twist-lock models)
- TROLL® 9500 Water Quality Instruments
- TROLL® Link Telemetry Systems, MultiHop Radios, and TROLL® Net Hub

Customizable Cable

When ordering, consider the following options:

- **Vented or non-vented cable:** Vented cable is used with vented pressure/level sensors for gauged measurements. The cable vent tube ensures that atmospheric pressure is the reference pressure applied to the sensor diaphragm. Non-vented cable may be used with non-vented instruments for absolute measurements. Compensate absolute measurements with barometric pressure data by using a BaroTROLL® Instrument and Win-Situ® Baro Merge™ Software.
- **Jacket options:** Tefzel® (vented) or thermoplastic polyurethane (TPU; vented or non-vented)
- **Customized lengths:** Up to 1,219 m (4,000 ft) 600Ft Cable
- **Cable termination:** Twist-lock termination (female connector) on one or both cable ends. Other custom configurations are available—call for details.
- ~~**Cable reels:** Plastic or steel reel~~

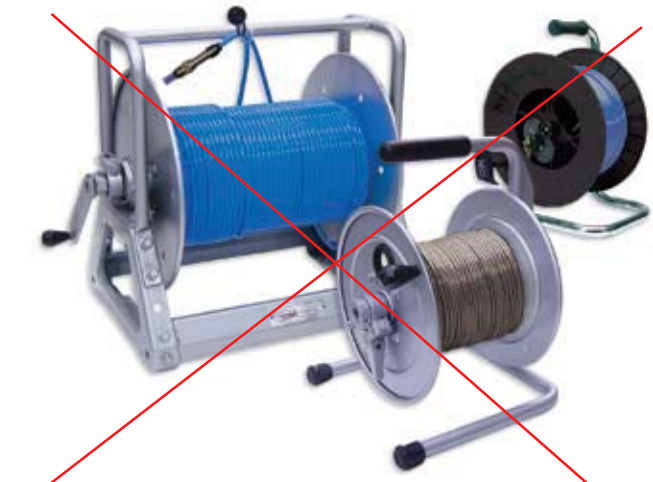

Steel and plastic reels available

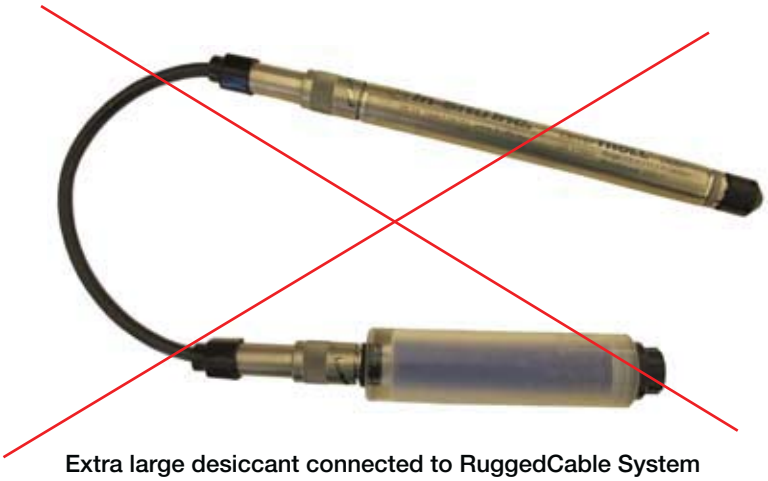

Extra large desiccant connected to RuggedCable System and Level TROLL Instrument

Titanium twist-lock connectors

In-Situ® RuggedCable® Systems

Specifications

Specifications	RuggedCable Systems
Operating temp. range	-25° to 80° C (-13° to 176° F)
Jacket options	• TPU (thermoplastic polyurethane) • Tefzel® (ETFE fluoropolymer; generic equivalent to Teflon®)
Vent options	• Non-vented (absolute) • Vented (gauged) with desiccant (used to mitigate moisture/humidity)
Conductors	6 conductors, 24 AWG, polypropylene insulation
Cable diameter	• TPU: 6.7 mm (0.265 in) • Tefzel: 6.35 mm (0.25 in)
Connector diameter	18. 5 mm (0.73 in)
Weight	• Non-vented, TPU: 16 kg/300 m (35.6 lbs/1,000 ft) • Non-vented, Tefzel: 14 kg/300 m (32 lbs/1,000 ft) • Vented, TPU: 14 kg/300 m (32 lbs/1,000 ft) • Vented, Tefzel: 14 kg/300 m (32 lbs/1,000 ft)
Minimum bend radius	2X cable diameter (13.5 mm; 0.54 in)
Break strength	127 kg (280 lbs)
Maximum cable length	1,219 m (4,000 ft) for RS485
Desiccant pack (required for vented systems)	Large and extra large desiccant packs available with titanium, ABS, or stripped-and-tinned termination.
Warranty	2 years

RuggedCable Selection Guide

Application	Jacket Type	Cable Type
Aquifer characterization	TPU or Tefzel	Vented
Crest stage gaging	TPU	Non-vented
Dewatering	TPU	Vented or non-vented
Flood and storm surge monitoring	TPU	Non-vented
Landfill monitoring	Tefzel	Non-vented
Municipal and industrial monitoring (SCADA)	TPU	Non-vented
Remediation projects	Tefzel	Vented
River, lake, and reservoir monitoring	TPU	Vented or non-vented
Saltwater/brackish water	TPU or Tefzel	Vented or non-vented
Stormwater monitoring	TPU	Vented or non-vented
Tide/harbor monitoring	TPU or Tefzel	Vented
Wetland and estuary monitoring	TPU or Tefzel	Vented or non-vented

Specifications are subject to change without notice.

Accessories

- Large desiccant for low-humidity environments or for deployments where maintenance occurs frequently.
- Extra large desiccant for high-humidity environments or for depolyments where maintenance occurs infrequently. Desiccates six times more saturated air than the large desiccant.
- Titanium cable extenders are used to join two lengths of cable without signal loss. The cable extender seals the cables, provides a weight-bearing connection, and maintains venting.
- Plastic and steel reels

Large desiccant with titanium twist-lock connector for standard deployments

Economical large plastic desiccant

Extra large desiccant with titanium twist-lock connector for high-humidity sites, remote sites, or applications that require fast sampling rates.

Outboard desiccant for use with stripped-and-tinned RuggedCable Systems

Titanium cable extender

Kellems is a registered trademark of Hubbell Incorporated.
Teflon and Tefzel are registered trademarks of E.I. Du Pont de Nemours and Co.

In-Situ Inc.

Call to purchase or rent—www.in-situ.com
221 East Lincoln Avenue, Fort Collins, Colorado, U.S.A. 80524
1-800-446-7488 (toll-free in U.S.A. and Canada)
1-970-498-1500 (U.S.A. and international)
Copyright © 2012 In-Situ Inc. All rights reserved. Sept. 2012 (web)

In-Situ Inc.

Information Sheet

Catalog No. 0053310

SHORT STRIPPED & TINNED CABLE with Male Twist-Lock Connector for Level TROLL®

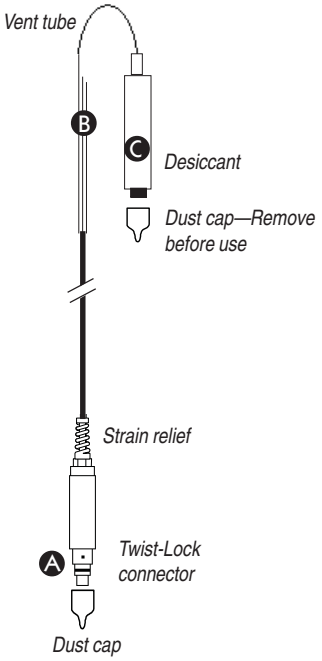

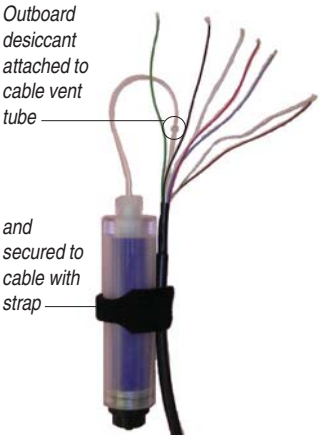

TIP: *The desiccant may be removed from the vent tube, if needed, for better access to the conductor wires. Pull the vent tube extender off the cable vent tube to remove. After connecting and trimming wires, attach desiccant vent tube to cable vent tube and secure desiccant to cable with hook-and-loop strap, as shown here.*

Connects a Level TROLL's RuggedCable™ to a controller or logger for communication via:

- Analog (4-20 mA)
- SDI-12
- RS485 Modbus
- RS232 Modbus (with a customer-supplied converter)

A Male Twist-Lock connector mates with female Twist-Lock connector on the RuggedCable

B Stripped & tinned wires on opposite end for wiring to PLC or logger

C Removable, refillable outboard desiccant protects cable vent tube from condensation in high-humidity environments

SPECIFICATIONS

Materials	PVC, titanium, nylon, Viton®
Dimensions	13.33 cm (5.25 in) long, 19 mm (0.75 in) O.D.
Environmental Rating	IP67 when connected, not designed for submersion
Cable	0.9 m (3 ft) vented TPU (Thermoplastic Polyurethane)
Conductors	6 conductors, 24 AWG, polypropylene insulation
Desiccant pack	Clear acrylic, nylon, HDPE membrane
Desiccant	approx. 22 g silica gel, type 4
Max. recommended cable lengths	SDI-12 61 m (200 ft) Modbus 1259 m (4000 ft) 4-20 mA 1259 m (4000 ft)

CONNECTIONS

Refer to wiring diagrams on back of sheet. Trim back and insulate unused wires. The shield should be wired to a chassis ground or earth ground.

Power Connections. The Red wire provides power for Modbus and SDI-12 modes. The Brown wire provides power for the 4-20 mA mode. If power is present on the Brown wire and not on the Red wire, the device enters the 4-20 mA mode automatically and stays in the 4-20 mode until power is removed from the Brown wire or is applied to the Red wire. The Red wire has priority — if power is applied to both wires at the same time, the device will operate in Modbus or SDI-12 modes but not in 4-20.

Communications. The device automatically switches between Modbus and SDI-12 modes depending on which of the two interfaces has activity. Modbus and SDI-12 cannot be used at the same time — whichever one is currently in use will block communication on the other.

To communicate with the device using Win-Situ® 5 software through a serial COM port: Disconnect the RuggedCable from the short stripped and tinned cable connector. Attach a TROLL Com to the RuggedCable. Connect the TROLL Com's DB9-pin connector to a serial port on a PC running Win-Situ 5.

(over)

SHORT STRIPPED & TINNED CABLE

Level TROLL Connections

ANALOG (4-20 mA) 2 WIRE

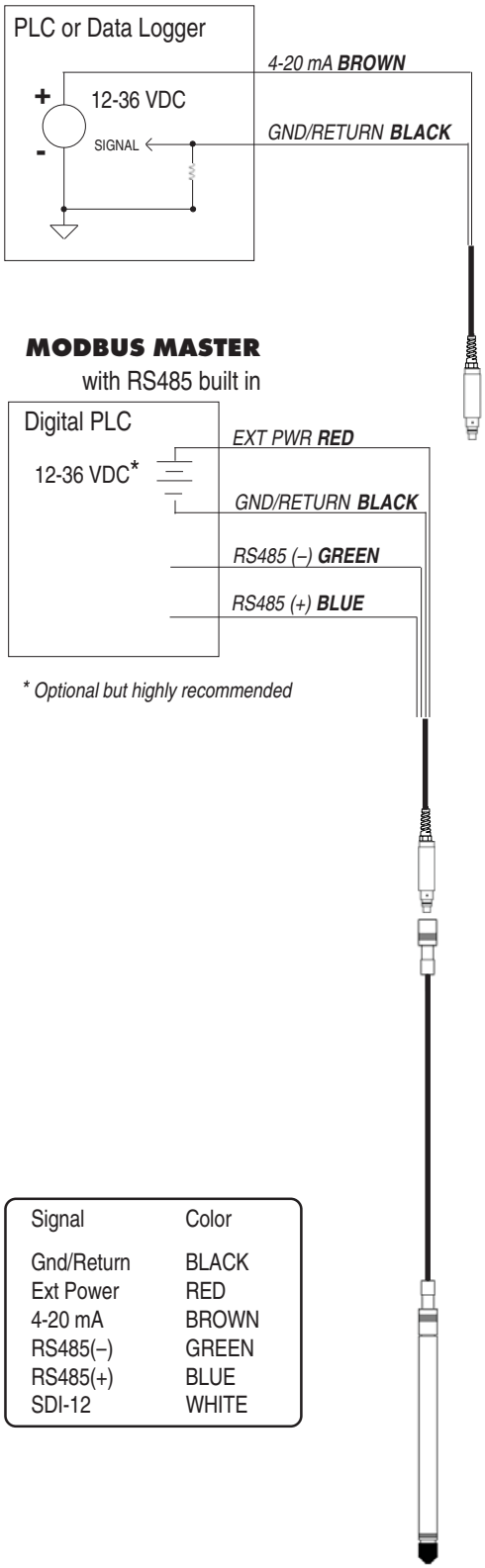

SDI-12 3 WIRE

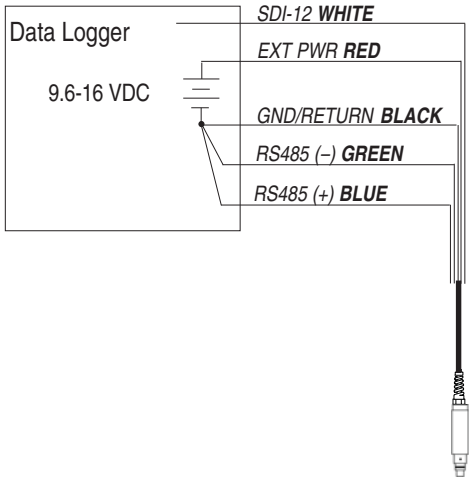

MODBUS MASTER

with RS485 built in

* Optional but highly recommended

MODBUS MASTER

with RS232 built in (converter required)

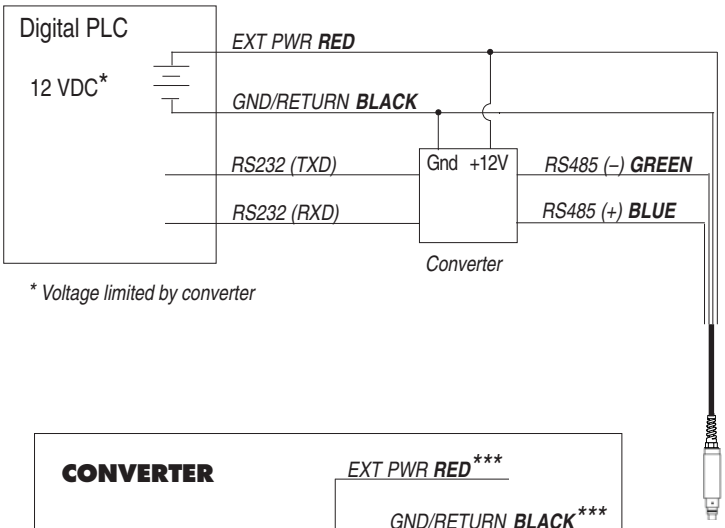

* Voltage limited by converter

CONVERTER

Port-Powered RS485 converter, such as B&B Electronics Model 485SD9TB

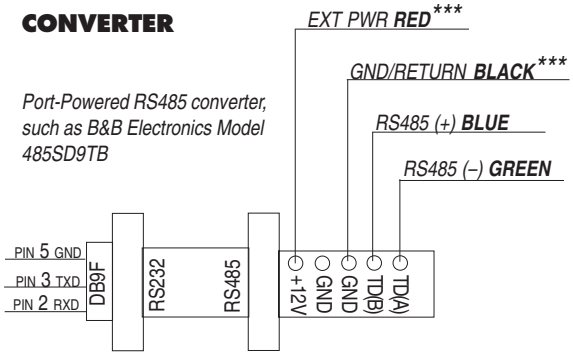

*** Required if port power is not available

Signal	Color
Gnd/Return	BLACK
Ext Power	RED
4-20 mA	BROWN
RS485(–)	GREEN
RS485(+)	BLUE
SDI-12	WHITE

1 800 446 7488
(toll-free, US and Canada) or 970 498 1500 **www.in-situ.com**

In-Situ Inc.

Due to continuing product development this information is subject to change without notice. In-Situ and the In-Situ logo, Win-Situ, TROLL, BaroTROLL, RuggedReader, RuggedCable and RDO are trademarks or registered trademarks of In-Situ Inc. Viton is a registered trademark of DuPont Dow Elastomers.
Copyright © 2005-2007 by In-Situ Inc. All rights reserved.

0053312 rev. 004 09/07

Panel Materials for CP-100

CONCEPT, TYPE 4 AND 12

INDUSTRY STANDARDS

Wall-mounting brackets required to maintain UL/CSA external mounting requirement.

CONCEPT solid single-door, door with window and flush-mount models

UL 508A Listed; Type 4, 12; File No. E61997
cUL Listed per CSA C22.2 No. 94; Type 4, 12; File No. E61997

NEMA/EEMAC Type 4, 12, 13
CSA, File No. 42186: Type 4, 12
VDE IP66
IEC 60529, IP66

CONCEPT two-door models

UL 508A Listed; Type 12; File No. E61997
cUL Listed per CSA C22.2 No. 94; Type 12; File No. E61997

NEMA/EEMAC Type 12
CSA, File No. 42186, Type 12
VDE IP 55
IEC 60529, IP55

APPLICATION

CONCEPT Enclosures are ideal for machine control applications. With streamlined styling, flush quarter-turn latches and an attractive, durable finish. Available in solid or window single-door and two-door landscape, flush-mount and sloped-top versions for application and mounting flexibility. Two-door landscape models provide full-width access and easy panel installation.

SPECIFICATIONS

- 18, 16 or 14 gauge steel
- Seams continuously welded and ground smooth
- Corner-formed doors
- Simple easy-to-remove and install hinge pins with captivation clip
- High-torque threadless studs and fasteners on door
- Minimum-width body flange provides maximum door opening
- Door opens 210 degrees
- External formed body flange
- Panel mounting studs fit optional CONCEPT panels and other accessories
- Mounting holes in back of body for direct mounting or optional external mounting brackets
- Removable door with hidden hinges for clean, aesthetic appearance
- Seamless foam-in-place gasket
- Quarter-turn slotted latch(es)
- Door alignment device on doors wider than 30 in.
- Four hinges on 60-in.-high enclosures
- Grounding stud on body; bonding provision on door (except window-door models)
- Provisions on door for optional high-impact thermoplastic data pocket
- Hardware kit with panel mounting nuts, panel grounding hardware and sealing washers
- Installation instructions provided

Single-Door and Window-Door Models:

- 3-point latch system on enclosures with height equal to or greater than 42-in. with quarter-turn, slotted latch

Flush-Mount Models:

- Mounting frame extends completely around enclosure

Two-Door Models:

- Overlapping door design provides full-width access
- Three-point latch system on right-hand hinged door with quarter-turn, slotted latch

FINISH

Two standard finishes are available: ANSI 61 gray or RAL 7035 textured light-gray polyester powder paint inside and out.

ACCESSORIES

Door Stop Kit
Handles
Lock Inserts
CONCEPT Panels
Mounting-Bracket Kits
See also the Popular Cooling Products and Accessories tables following the Standard Product tables

MODIFICATION AND CUSTOMIZATION

Hoffman excels at modifying and customizing products to your specifications. Contact your local Hoffman sales office or distributor for complete information.

BULLETIN: CW1

Catalog Number	AxBxC in./mm	Finish	Door Ga.	Body Ga.	CONCEPT Panel	Conductive CONCEPT Panel	Panel Size D x E in./mm	Mounting G x H in./mm	Latches qty.	Latches style	J in./mm
CSD36248LG	36.00 x 24.00 x 8.00 914 x 610 x 203	RAL 7035 Lt. Gray	14	16	CP3624	CP3624G	34.20 x 22.20 869 x 564	34.50 x 22.50 876 x 572	2	Quarter-turn	5.00 127
CSD36308	36.00 x 30.00 x 8.00 914 x 762 x 203	ANSI 61 Gray	14	14	CP3630	CP3630G	34.20 x 28.20 869 x 716	34.50 x 28.50 876 x 724	2	Quarter-turn	5.00 127
CSD36308LG	36.00 x 30.00 x 8.00 914 x 762 x 203	RAL 7035 Lt. Gray	14	14	CP3630	CP3630G	34.20 x 28.20 869 x 716	34.50 x 28.50 876 x 724	2	Quarter-turn	5.00 127
CSD36368	36.00 x 36.00 x 8.00 914 x 914 x 203	ANSI 61 Gray	14	14	CP3636	CP3636G	34.20 x 34.20 869 x 869	34.50 x 34.50 876 x 876	2	Quarter-turn	5.00 127
CSD36368LG	36.00 x 36.00 x 8.00 914 x 914 x 203	RAL 7035 Lt. Gray	14	14	CP3636	CP3636G	34.20 x 34.20 869 x 869	34.50 x 34.50 876 x 876	2	Quarter-turn	5.00 127
CSD42248	42.00 x 24.00 x 8.00 1067 x 610 x 203	ANSI 61 Gray	14	14	CP2442	CP2442G	22.20 x 40.20 564 x 1021	40.50 x 22.50 1029 x 572	1	3-point	21.00 533
CSD42248LG	42.00 x 24.00 x 8.00 1067 x 610 x 203	RAL 7035 Lt. Gray	14	14	CP2442	CP2442G	22.20 x 40.20 564 x 1021	40.50 x 22.50 1029 x 572	1	3-point	21.00 533
CSD42308	42.00 x 30.00 x 8.00 1067 x 762 x 203	ANSI 61 Gray	14	14	CP4230	CP4230G	40.20 x 28.20 1021 x 716	40.50 x 28.50 1029 x 716	1	3-point	21.00 533
CSD42308LG	42.00 x 30.00 x 8.00 1067 x 762 x 203	RAL 7035 Lt. Gray	14	14	CP4230	CP4230G	40.20 x 28.20 1021 x 716	40.50 x 28.50 1029 x 716	1	3-point	21.00 533
CSD42368	42.00 x 36.00 x 8.00 1067 x 914 x 203	ANSI 61 Gray	14	14	CP4236	CP4236G	40.20 x 34.20 1021 x 869	40.50 x 34.50 1029 x 876	1	3-point	21.00 533
CSD42368LG	42.00 x 36.00 x 8.00 1067 x 914 x 203	RAL 7035 Lt. Gray	14	14	CP4236	CP4236G	40.20 x 34.20 1021 x 869	40.50 x 34.50 1029 x 876	1	3-point	21.00 533
CSD48248	48.00 x 24.00 x 8.00 1219 x 610 x 203	ANSI 61 Gray	14	14	CP4824	CP4824G	46.20 x 22.20 1174 x 564	46.50 x 22.50 1181 x 572	1	3-point	24.00 610
CSD48248LG	48.00 x 24.00 x 8.00 1219 x 610 x 203	RAL 7035 Lt. Gray	14	14	CP4824	CP4824G	46.20 x 22.20 1174 x 564	46.50 x 22.50 1181 x 572	1	3-point	24.00 610
CSD48308	48.00 x 30.00 x 8.00 1219 x 762 x 203	ANSI 61 Gray	14	14	CP3048	CP3048G	28.20 x 46.20 716 x 1174	46.50 x 28.50 1181 x 724	1	3-point	24.00 610
CSD48308LG	48.00 x 30.00 x 8.00 1219 x 762 x 203	RAL 7035 Lt. Gray	14	14	CP3048	CP3048G	28.20 x 46.20 716 x 1174	46.50 x 28.50 1181 x 724	1	3-point	24.00 610
CSD48368	48.00 x 36.00 x 8.00 1219 x 914 x 203	ANSI 61 Gray	14	14	CP4836	CP4836G	46.20 x 34.20 1174 x 876	46.50 x 34.50 1181 x 876	1	3-point	24.00 610
CSD48368LG	48.00 x 36.00 x 8.00 1219 x 914 x 203	RAL 7035 Lt. Gray	14	14	CP4836	CP4836G	46.20 x 34.20 1174 x 876	46.50 x 34.50 1181 x 876	1	3-point	24.00 610
CSD60368	60.00 x 36.00 x 8.00 1524 x 914 x 203	ANSI 61 Gray	14	14	CP6036	CP6036G	58.20 x 34.20 1478 x 869	58.50 x 34.50 1486 x 876	1	3-point	30.00 762
CSD60368LG	60.00 x 36.00 x 8.00 1524 x 914 x 203	RAL 7035 Lt. Gray	14	14	CP6036	CP6036G	58.20 x 34.20 1478 x 869	58.50 x 34.50 1486 x 876	1	3-point	30.00 762
CSD161210	16.00 x 12.00 x 10.00 406 x 305 x 254	ANSI 61 Gray	16	18	CP1612	CP1612G	14.20 x 10.20 361 x 259	14.50 x 10.50 368 x 267	1	Quarter-turn	8.00 203
CSD161210LG	16.00 x 12.00 x 10.00 406 x 305 x 254	ANSI 61 Gray	16	18	CP1612	CP1612G	14.20 x 10.20 361 x 259	14.50 x 10.50 368 x 267	1	Quarter-turn	8.00 203
CSD161610	16.00 x 16.00 x 10.00 406 x 406 x 254	RAL 7035 Lt. Gray	16	18	CP1616	CP1616G	14.20 x 14.20 361 x 361	14.50 x 14.50 368 x 368	1	Quarter-turn	8.00 203
CSD161610LG	16.00 x 16.00 x 10.00 406 x 406 x 254	RAL 7035 Lt. Gray	16	18	CP1616	CP1616G	14.20 x 14.20 361 x 361	14.50 x 14.50 368 x 368	1	Quarter-turn	8.00 203
CSD162010	16.00 x 20.00 x 10.00 406 x 508 x 254	ANSI 61 Gray	16	18	CP2016	CP2016G	18.20 x 14.20 462 x 361	14.50 x 18.50 368 x 470	1	Quarter-turn	8.00 203
CSD162010LG	16.00 x 20.00 x 10.00 406 x 508 x 254	RAL 7035 Lt. Gray	16	18	CP2016	CP2016G	18.20 x 14.20 462 x 361	14.50 x 18.50 368 x 470	1	Quarter-turn	8.00 203
CSD201610	20.00 x 16.00 x 10.00 508 x 406 x 254	ANSI 61 Gray	16	18	CP2016	CP2016G	18.20 x 14.20 462 x 361	18.50 x 14.50 470 x 368	1	Quarter-turn	10.00 254
CSD201610LG	20.00 x 16.00 x 10.00 508 x 406 x 254	RAL 7035 Lt. Gray	16	18	CP2016	CP2016G	18.20 x 14.20 462 x 361	18.50 x 14.50 470 x 368	1	Quarter-turn	10.00 254
CSD202010	20.00 x 20.00 x 10.00 508 x 508 x 254	ANSI 61 Gray	16	18	CP2020	CP2020G	18.20 x 18.20 462 x 462	18.50 x 18.50 470 x 470	1	Quarter-turn	10.00 254
CSD202010LG	20.00 x 20.00 x 10.00 508 x 508 x 254	RAL 7035 Lt. Gray	16	18	CP2020	CP2020G	18.20 x 18.20 462 x 462	18.50 x 18.50 470 x 470	1	Quarter-turn	10.00 254
CSD202410	20.00 x 24.00 x 10.00 508 x 610 x 254	ANSI 61 Gray	16	18	CP2420	CP2420G	22.20 x 18.20 564 x 462	18.50 x 22.50 470 x 572	1	Quarter-turn	10.00 254
CSD202410LG	20.00 x 24.00 x 10.00 508 x 610 x 254	RAL 7035 Lt. Gray	16	18	CP2420	CP2420G	22.20 x 18.20 564 x 462	18.50 x 22.50 470 x 572	1	Quarter-turn	10.00 254
CSD241210	24.00 x 12.00 x 10.00 610 x 305 x 254	ANSI 61 Gray	16	18	CP2412	CP2412G	22.20 x 10.20 564 x 259	22.50 x 10.50 572 x 267	1	Quarter-turn	12.00 305
CSD241210LG	24.00 x 12.00 x 10.00 610 x 305 x 254	RAL 7035 Lt. Gray	16	18	CP2412	CP2412G	22.20 x 10.20 564 x 259	22.50 x 10.50 572 x 267	1	Quarter-turn	12.00 305
CSD241610	24.00 x 16.00 x 10.00 610 x 406 x 254	ANSI 61 Gray	16	18	CP2416	CP2416G	22.20 x 14.20 564 x 361	22.50 x 14.50 572 x 368	1	Quarter-turn	12.00 305
CSD241610LG	24.00 x 16.00 x 10.00 610 x 406 x 254	RAL 7035 Lt. Gray	16	18	CP2416	CP2416G	22.20 x 14.20 564 x 361	22.50 x 14.50 572 x 368	1	Quarter-turn	12.00 305
CSD242010	24.00 x 20.00 x 10.00 610 x 508 x 254	ANSI 61 Gray	16	18	CP2420	CP2420G	22.20 x 18.20 564 x 462	22.50 x 18.50 572 x 470	1	Quarter-turn	12.00 305
CSD242010LG	24.00 x 20.00 x 10.00 610 x 508 x 254	RAL 7035 Lt. Gray	16	18	CP2420	CP2420G	22.20 x 18.20 564 x 462	22.50 x 18.50 572 x 470	1	Quarter-turn	12.00 305
CSD242410	24.00 x 24.00 x 10.00 610 x 610 x 254	ANSI 61 Gray	14	16	CP2424	CP2424G	22.20 x 22.20 564 x 564	22.50 x 22.50 572 x 572	2	Quarter-turn	5.00 127
CSD242410LG	24.00 x 24.00 x 10.00 610 x 610 x 254	RAL 7035 Lt. Gray	14	16	CP2424	CP2424G	22.20 x 22.20 564 x 564	22.50 x 22.50 572 x 572	2	Quarter-turn	5.00 127

BOM #4

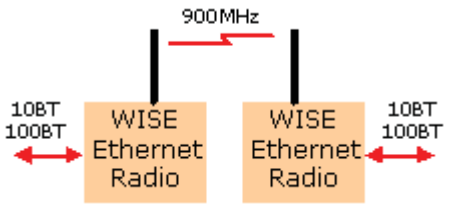

900 MHz Ethernet PLC Radios - Industrial Wireless Ethernet bridges link SCADA network equipment up to 25 miles away

- home
- services
- customers
- white papers
- contact us

Synetcom
Your Industrial Wireless Source

Industrial Wireless Ethernet 900 MHz PLC Radio Modem - 900 MHz FHSS Industrial Wireless Ethernet Radio Modem System

Models: WISE-B-900 (170 KB/s)

Approvals: Class 1, Division 2, Groups A,B,C,D Class 1, Zone 2, Group IIC

Extend Ethernet connections to PLC locations not serviced by your company network with Synetcom's 900 MHz Industrial Wireless PLC Radio Modem product. Connect PLC, RTU, Wireless I/O, data acquisition and remote control equipment with the WISE-B-900 PLC Ethernet Radio - build reliable long distance, license free wireless industrial SCADA systems.

Synetcom's 900 MHz Ethernet Radio systems are designed for reliable high data throughput even if the radio path is not ideal. Higher transmit power and better receiver sensitivity enable Ethernet connections to remote PLC and RTU locations that you could not reach in the past.

For higher data throughput on line of site links, see our 2.4 GHz Ethernet Radio products.

Features

- 900 MHz Frequency Hopping Spread Spectrum FHSS PLC radio
- Wireless networking of PLCs
- Wireless networking of industrial data acquisition and remote control equipment
- Radio is IP addressable
- Wireless Ethernet bridge between PLC, RTU, sensors, controllers and HMI computers
- Long Range - up to 25 miles with 20 dB fade margin - high throughput sustained
- Advanced ARQ, CRC error control, hopping algorithm
- Excellent immunity to interference and multipath fading
- Ethernet Radio repeaters for >25 miles
- Rugged packaging for industrial use - 14GA metal enclosure
- -30°C to + 70°C

900 MHz Industrial Wireless Ethernet PLC Radio

Synetcom's 900 MHz Ethernet PLC Radio is a rugged, long range 900 MHz radio that connects PLC, RTU, I/O and other SCADA equipment. The radio is designed to provide high speed wireless connectivity between PLCs and PLC networks - without compromising reliability and performance. Typical uses include Ethernet bridging, SCADA device networking, PLC networking and industrial wireless data acquisition and control.

The product can function as a high speed bridge between two Ethernet networks, or it can provide wireless networking between an HMI computer + master PLC and multiple remote slave PLCs. Complex data acquisition and control systems can be built using repeaters to extend

Applications

- Wireless Networking of PLCs
- Industrial Wireless Ethernet SCADA systems
- Wireless PLC Data Acquisition
- Wireless PLC Remote Control
- Long Distance Wireless PLC

range and coverage.

Data Throughput and Range

The 900 MHz Ethernet PLC Radio operates with data throughput significantly higher than other industrial (FHSS) Ethernet radios:

WISE-B-900: 150 KB/s (25 miles with 11 dBi gain antennas)

Maximum throughput occurs on a point-to-point link. Error-free data transmission is assured via CRC error checking and ARQ (automatic retransmission of packets with bit errors).

Why doesn't the radio transmit at 10 MB/s? Industrial Ethernet applications often demand long range and high reliability which is obtained only by operating the link more slowly - a limitation of physics, not the radio design.

For example, faster commodity 802.11 Ethernet bridges or routers offer a higher throughout but only over short distances (1-2 miles under ideal conditions) with the same reliability our radios deliver at 25 miles.

Comparison to 2.4 GHz

Our 2.4 GHz Industrial Ethernet Radios typically operate at 220 KB/s or faster by design. Actual data throughput may be compromised if there are obstructions in the radio path. The 900 MHz Wireless Ethernet Modem is less affected by obstructions.

Ethernet Links

Transmission Range:
Synetcom specifies a 25 mile range (900 MHz Ethernet PLC Radio) that includes a 20 dB margin (if the signal fades as much as 20 dB - a factor of 1/100 - the link continues to operate).

Obstructions in the line of sight path reduces range, depending on the type of obstruction. Contact our factory for assistance.

900 MHz Ethernet PLC radio modem specifications>

www.synetcom.com
(310) 379-2000
23879 Madison Street
Torrance, CA 90505

900 MHz PLC radio page 1>

900 MHz Industrial Wireless Ethernet PLC Radio Modem Specifications:

Model - WISE-B-900 PLC Radio
PLC Radio Data Rate - 170 Kbps; Maximum Throughput - 150 KB/s
PLC Interface - 10Base-T
PLC Radio Network Topologies - Point-to-Point or Multipoint
RF Output Power - 500 mW (.5 watt)
RF Modulation - Frequency Hopping Spread Spectrum (FHSS)
Frequency Range - 902 MHz to 928 MHz
Power - 9VDC to 30VDC (external AC power supply included)
Enclosure Material - Aluminum
Enclosure Size - 7.9" x 5.7" x 2.1" (201 x 144 x 53 mm)
Operating Temperature -30º C to +70ºC; 0 to 95% humidity, non-condensing
Licensing Type Certified; License-free operation under FCC Part 15

Industry Approvals: Class 1, Division 2, Groups A,B,C,D Class 1, Zone 2, Group IIC

PLC 900 MHz Radio Connectors

o Power 2-Pin
o RS-232 RJ-11 Configuration Port
o Sync In RJ-11
o Sync Out RJ-11
o 10BT RJ-45
o Antenna RVS TNC

PLC 900 MHz Radio Indicators

Radio Power, Ethernet Link Status, TX, RX, Ethernet Radio Link Status

900 MHz PLC Radio (back view)

back to 900 MHz PLC Radio page 1>

Synetcom
Your Industrial Wireless Source
www.synetcom.com
(310) 379-2000
23879 Madison Street
Torrance, CA 90505

TY-900
Yagi Antenna

The Kathrein-Scala TY series are rugged broadband yagi antennas fabricated of 6061/T6 aluminum rod and seamless drawn pipe, anodized for maximum reliability and corrosion resistance. The hardware and fastenings are stainless steel. The internal balun, coax feed and connector are sealed in a foam potting system to prevent moisture penetration and assure long service life in severe environmental conditions. The heavy aluminum mounting casting allows installation for V or H polarization.

- The TY-900 is specifically designed for professional fixed-station applications in the 890–960 MHz band.

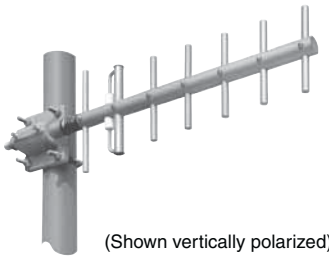

(Shown vertically polarized)

Specifications:

Frequency range	890–960 MHz
Gain	12 dBi
Impedance	50 ohms
VSWR	< 1.5:1 maximum (1.35:1 typical)
Polarization	Horizontal or vertical
Front-to-back ratio	>20 dB
Maximum input power	100 watts (at 50°C)
H-plane beamwidth	48 degrees (half-power)
E-plane beamwidth	40 degrees (half-power)
Connector	N female
Weight	3 lb (1.4 kg)
Dimensions	23 x 7 inches (584 x 178 mm)
Wind load Front/Side	at 93 mph (150kph) 3 lbf / 4 lbf (11 N) / (17 N)
Wind survival rating*	150 mph (240 kph)
Shipping dimensions	28 x 10 x 4.5 inches (710 x 254 x 114 mm)
Shipping weight	5.0 lb (2.3 kg)
Mounting	For masts of 1.25 to 2.375 inch (32 to 60 mm) OD.
See reverse for order information.	

* Mechanical design is based on environmental conditions as stipulated in TIA-222-G-2 (December 2009) and/or ETS 300 019-1-4 which include the static mechanical load imposed on an antenna by wind at maximum velocity. See the Engineering Section of the catalog for further details.

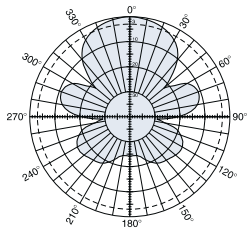

H-plane
Horizontal pattern – V-polarization
Vertical pattern – H-polarization

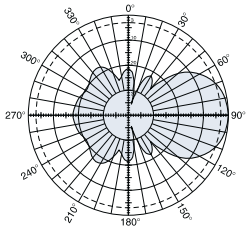

E-plane
Horizontal pattern – H-polarization
Vertical pattern – V-polarization

10065-E

Kathrein Inc., Scala Division Post Office Box 4580 Medford, OR 97501 (USA) Phone: (541) 779-6500 Fax: (541) 779-3991
Email: communications@kathrein.com Internet: www.kathrein-scala.com

TY-900
Yagi Antenna

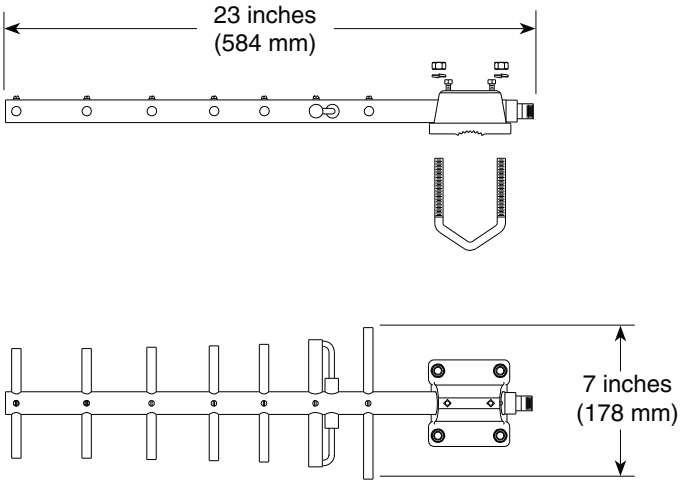

Order Information:

Model	Description
TY-900	Yagi antenna with N connector

All specifications are subject to change without notice. The latest specifications are available at www.kathrein-scala.com.

Kathrein Inc., Scala Division Post Office Box 4580 Medford, OR 97501 (USA) Phone: (541) 779-6500 Fax: (541) 779-3991
Email: communications@kathrein.com Internet: www.kathrein-scala.com

ALL DESIGN, OPERATIVE AND PROCESS DATA PERTAINING TO THE ARTICLE SHOWN ON THIS SHEET IS THE PROPERTY OF POLYPHASER CORPORATION. THE INFORMATION IS NOT TO BE COPIED, REPRODUCED, REVEALED TO OR APPROPRIATED BY OTHERS WITHOUT THE EXPRESS WRITTEN CONSENT OF POLYPHASER CORPORATION.

These commodities or technology are exported from the U.S. in accordance with the Export Administration Regulations. Diversion contrary to U.S. law prohibited.

REVISIONS

REV LTR	DATE	ENG	MKTG	Q.A.
F	03/05/07 CM	AD	–	–

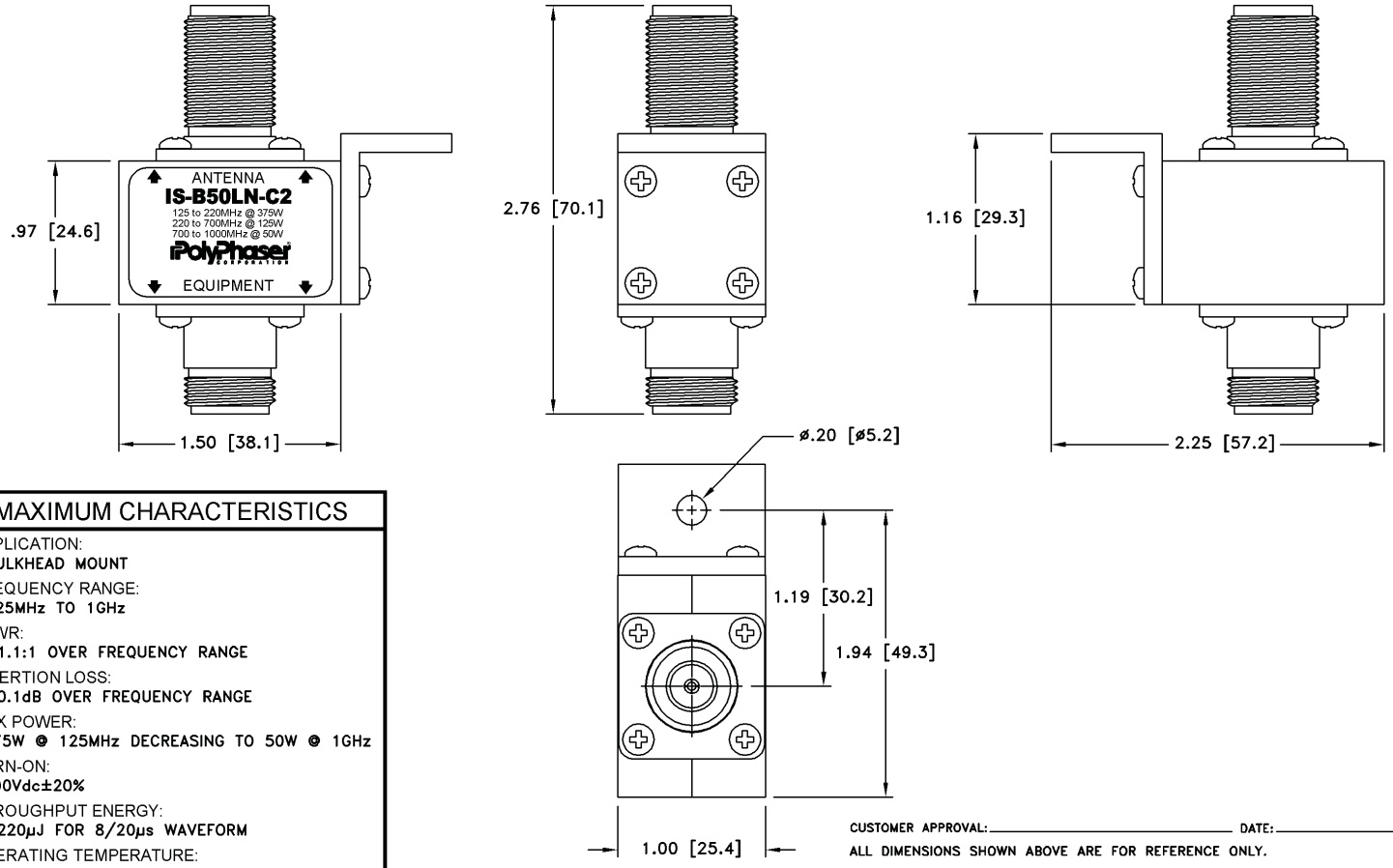

MAXIMUM CHARACTERISTICS

APPLICATION:
BULKHEAD MOUNT

FREQUENCY RANGE:
125MHz TO 1GHz

VSWR:
≤1.1:1 OVER FREQUENCY RANGE

INSERTION LOSS:
≤0.1dB OVER FREQUENCY RANGE

MAX POWER:
375W @ 125MHz DECREASING TO 50W @ 1GHz

TURN-ON:
600Vdc±20%

THROUGHPUT ENERGY:
≤220µJ FOR 8/20µs WAVEFORM

OPERATING TEMPERATURE:
−55°C TO +50°C

STORAGE TEMPERATURE:
−55°C TO +85°C

RELATIVE HUMIDITY:
90% AT 40°C

VIBRATION
1G AT 5Hz TO 100Hz

CUSTOMER APPROVAL: _____ DATE: _____

ALL DIMENSIONS SHOWN ABOVE ARE FOR REFERENCE ONLY.

DRAFTER: M. JOHNSON	DATE: 07/11/94	PolyPhaser
MECH ENGINEER: – – – –	DATE: – – –	P.O. BOX 9000 MINDEN, NV 89423 TEL: 775-782-2511 FAX: 775-782-4476
ELEC ENGINEER: K. BARTEL	DATE: 05/01/95	DWG NO/PART NO/DESCRIPTION: IS-B50LN-C2 CUSTOMER PRINT
MARKETING: – – – –	DATE: – – –	
QUALITY DEPT: R. MATHEUS	DATE: 05/01/95	CAGE CODE: 61114 · FILE NAME: –C1 · SCALE: 1/1 · SHEET: 1 OF 1

FSJ4-50B Product Detail

Product Description

Zoom

Part Number: FSJ4-50B

Manufacturer: CommScope / Andrew

List Price: $4.54

My Price: Login >>

QTY: 1 Add to Cart

Email

1/2" Superflex 50 Ohm Coax Cable

Catalog Description

1/2" Superflexible 50 Ohm Foam HELIAX® Coaxial Cable, corrogated copper. FSJ4-50B is Riser Rated. FSJ4RK-50B - is non-halogenated, fire retarden.

Specifications

Attenuation (dB)/100 Ft.	
30 MHz	0.557
150 MHz	1.28
450 MHz	2.31
824 MHz	3.23
960 MHz	3.52
1500 MHz	4.54
2000 MHz	5.37
2300 MHz	5.83
5800 MHz	10.27
General Characteristics	
Max. Frequency	10.2 GHz
Propagation Velocity	81%
Overall Diameter(in)	.52
Dielectric	Closed Cell Foam Polyethylene
Outer Conductor	Helical Corrugated Solid Copper
Inner Conductor	Copper Clad Aluminum
Min. Bending Radius(in)	1.25"
Warranty	10 Year
Shipping Method	Less Than 350 Ft - UPS
Jacket Material	Black Polyethylene
Ship Weight (lbs.)	.14
Shipping	Parcel Freight

Similar Products

Product Specifications

F4PDMV2-C

7-16 DIN Male for 1/2 in FSJ4-50B cable

CHARACTERISTICS

General Specifications

Interface	7-16 DIN Male
Body Style	Straight
Brand	HELIAX®
Mounting Angle	Straight

Electrical Specifications

Connector Impedance	50 ohm
Operating Frequency Band	0 – 7500 MHz
Cable Impedance	50 ohm
3rd Order IMD	-120 dBm @ 910 MHz
3rd Order IMD Test Method	Two +43 dBm Carriers
RF Operating Voltage, maximum (vrms)	884.00 V
dc Test Voltage	2500 V
Outer Contact Resistance	1.50 mOhm
Inner Contact Resistance	0.80 mOhm
Insulation Resistance, minimum	5000 MOhm
Average Power	1.0 kW @ 900 MHz
Peak Power, maximum	15.60 kW
Insertion Loss, typical	0.05 dB
Shielding Effectiveness	-110 dB

Mechanical Specifications

Outer Contact Attachment Method	Crush-flare
Inner Contact Attachment Method	Captivated
Outer Contact Plating	Trimetal
Inner Contact Plating	Silver
Attachment Durability	25 cycles
Interface Durability	500 cycles
Interface Durability Method	IEC 169-4:9.5
Connector Retention Tensile Force	890 N | 200 lbf
Connector Retention Torque	5.42 N-m | 48.00 in lb
Insertion Force	200.17 N | 45.00 lbf

www.commscope.com

©2009 CommScope, Inc. All rights reserved.
All trademarks identified by ® or ™ are registered trademarks or trademarks, respectively, of CommScope.
All specifications are subject to change. See www.commscope.com for the most current information.

Product Specifications

F4PDMV2-C

Insertion Force Method	IEC 169-1:15.2.4
Pressurizable	No
Coupling Nut Proof Torque	24.86 N-m | 220.00 in lb
Coupling Nut Retention Force	1000.85 N | 225.00 lbf
Coupling Nut Retention Force Method	MIL-C-39012C-3.25, 4.6.22

Dimensions

Nominal Size	1/2 in
Diameter, maximum	34.54 mm | 1.36 in
Length	50.01 mm | 1.97 in
Weight	136.08 g | 0.30 lb

Environmental Specifications

Operating Temperature	-55 °C to +85 °C (-67 °F to +185 °F)
Storage Temperature	-55 °C to +85 °C (-67 °F to +185 °F)
Immersion Depth	1 m
Immersion Test Mating	Mated
Immersion Test Method	IEC 60529:2001, IP68
Water Jetting Test Mating	Mated
Water Jetting Test Method	IEC 60529:2001, IP66
Moisture Resistance Test Method	MIL-STD-202F, Method 106F
Mechanical Shock Test Method	MIL-STD-202F, Method 213B, Test Condition C
Thermal Shock Test Method	MIL-STD-202, Method 107, Test Condition A-1, Low Temperature -55 °C
Vibration Test Method	MIL-STD-202F, Method 204D, Test Condition B
Corrosion Test Method	MIL-STD-1344A, Method 1001.1, Test Condition A

Standard Conditions

Attenuation, Ambient Temperature	20 °C | 68 °F
Average Power, Ambient Temperature	40 °C | 104 °F

Return Loss

Frequency Band	VSWR	Return Loss (dB)
0–2200 MHz	1.03	36.00
2200–2700 MHz	1.05	33.00
2700–3000 MHz	1.05	32.00

Regulatory Compliance/Certifications

Agency	Classification
RoHS 2002/95/EC	Compliant by Exemption
China RoHS SJ/T 11364-2006	Above Maximum Concentration Value (MCV)

©2009 CommScope, Inc. All rights reserved.
All trademarks identified by ® or ™ are registered trademarks or trademarks, respectively, of CommScope.
All specifications are subject to change. See www.commscope.com for the most current information.

BOM #5

Product: 1492-REC15G

Description: 1492 DIN Rail Receptacle

Representative Photo Only (actual product may vary based on configuration selections)

DIN Rail Receptacle	
Current Rating	15A
Options	Ground Fault Current Interrupt

CERTIFICATIONS AND APPROVALS	
cULus	UL 508A (file# E54866)
For UL Certifications Directory:	http://database.ul.com/cgi-bin/XYV/template/LISEXT/1FRAME/index.htm

SDN-P DIN Rail Series

The SDN DIN Rail power supplies provide industry leading performance. Sag Immunity, transient suppression and noise tolerant, the SDN series ensures compatibility in demanding applications. Power factor correction to meet European directives, hazardous location approvals and optional redundant accessories allow the SDN series to be used in a wide variety of applications. Wide operation temperature range, high tolerance to shock and vibration and reliable design make the SDN series the preferred choice of users.

E61379 E137632 E234790

Applications

- Industrial/Machine Control
- Process Control
- Conveying Equipment
- Material Handling
- Vending Machines
- Packaging Equipment
- DeviceNet™
- Amusement Park Equipment
- Semiconductor Fabrication Equipment

Features

- Power Factor Correction (per EN61000-3-2)
- Auto Select 115/230 Vac, 50/60 Hz Input
- Improved metal mounting clip
- DC OK Signal
- Adjustable Voltage
- Parallel Capability standard on all units
- Industrial grade design
  - -10°C to 60°C operation without derating. Indefinite short circuit, overvoltage and overtemperature protection.
  - Powers high inrush loads without shutdown or foldback
  - Rugged metal case and DIN connector
- Narrow width on rail for space critical applications
- User-friendly front panel
  - Large, rugged, accessible, multiple connection screw terminations
  - Easy installation
- 12 Vdc and 48 Vdc single phase models available
- Highly efficient >90% switching technology
- High MTBF and reliability

Accessories

- Chassis Mount Bracket (SDN-PMBRK2)

Certifications and Compliances *

All Models

- c UL us Listed, Ind. Control Equipment, E61379
  - UL 508, CSA C22.2 No. 107.1
- c UL us UL Recognized Component, ITE, E137632
  - UL 60950-1/CSA C22.2 No. 60950-1, 2nd Edition
- c UL us UL Recognized Component, Haz. Loc., E234790
  - ISA 12.12.01, CSA C22.2 No. 213
  - Class I, Division 2, Groups A, B, C, D
- CE - Low Voltage Directive
  - IEC/EN60950-1, 2nd Edition
- Sag Immunity: SEMI F47
- RoHS Compliant

Models SDN 2.5-24-100P, SDN 4-24-100LP

- Class 2 per UL 1310, CSA C22.2 No. 223

Models SDN 2.5-24-100P, SDN 4-24-100LP, SDN 5-24-100P, SDN 10-24-100P

- Ex ATEX Directive
  - EN50021, Ex II 3 G, Ex nC IIC Gc

Related Products

- SDP™ Series
- SCP Series
- SCL Series
- SDU UPS

* Refer to user manual for installation requirements when used in hazardous locations.

SDN-P Specifications (Single Phase), 24 Vdc Output

Description	Catalog Number			
	SDN 2.5–24–100P	SDN 4–24–100LP	SDN 5–24–100P	SDN 10–24–100P
Input				
Nominal Voltage	115/230 Vac, Auto select			
–AC Range	85-264 Vac	85-132/176-264 Vac		
–DC Range [1]	90 - 375 Vdc	210 - 375 Vdc		
–Frequency	47 - 63 Hz			
Nominal Current [2]	1.3 / 0.7 A	2.1 / 1.0 A	2.2 / 1.0 A	5 / 2 A typ.
–Inrush current max.	typ. < 25 A	typ. < 20 A		typ. < 40 A
Efficiency (Losses [3])	> 87.5% typ. (8.6 W)	> 88% typ. (13.1 W)	> 88% typ. (16.4 W)	> 88% typ. (32.7 W)
Power Factor Correction	Units Fulfill EN61000-3-2			
Output				
Nominal Voltage	24 Vdc (22.5 - 28.5 Vdc adj.)	24 Vdc (22.5 - 28.5 Vdc adj.)	24 Vdc (22.5 - 28.5 Vdc adj.)	
–Tolerance	< ±2% overall (combination Line, load, time and temperature related changes)			
–Ripple [4]	< 50 mVpp			
Overvoltage Protection	< 33 Vdc	< 27 Vdc	< 33 Vdc	
Nominal Current	2.5 A (60 W)	3.8 A (92 W)	5 A (120 W)	10 A (240 W)
–Current Limit	Fold Forward (Current rises, voltage drops to maintain constant power during overload up to max peak current)			
Holdup Time [5]	> 20 ms @ full load			
Parallel Operation	Single or Parallel use is selectable via Front Panel Switch (SDN 2.5, 4 should not be used in parallel as Class 2 rating would be violated.)			
General				
EMC: –Emissions	EN61000-6-3, -4; Class B EN55011, EN55022 Radiated and Conducted including Annex A. EN61000-3-2			
–Immunity	EN61000-6-1, -2; EN61000-4-2 Level 4, EN61000-4-3 Level 3; EN61000-4-6 Level 3; EN61000-4-4 Level 4 input and Level 3 output; EN61000-4-5 Isolation Class 4, EN61000-4-11;			
Temperature	Storage: -25°C...+85°C Operation. -10°-60°C full power with operation to 70°C possible with a linear derating to half power from 60°C to 70°C (Convection cooling, no forced air required). Operation up to 50% load permissible with sideways or front side up mounting orientation.			
Humidity	The relative humidity is < 90% RH, noncondensing; IEC 68-2-2, 68-2-3.			
MTBF:	> 820,000 hours	> 640,000 hours		> 600,000 hours
– Standard	Bellcore Issue 6 Method 1 Case 3 @ 40°C			
Warranty	5 year limited warranty			
General Protection/Safety	Protected against continuous short-circuit, overload, open-circuit. Protection Class 1 (IEC536), degree of protection IP20 (IEC 529) Safe low voltage: SELV (acc. EN60950)			
Status Indicators	Green LED and DC OK signal (N.O. Solid State Contact rated 200 mA / 60 Vdc)			
Installation				
Fusing –Input	Internally fused. External 10 A slow acting fusing for the input is recommended to protect input wiring.			
–Output	Outputs are capable of providing high currents for short periods of time for inductive load startup or switching. Fusing may be required for wire/loads if 2x Nominal O/P current rating cannot be tolerated. Continuous current overload allows for reliable fuse tripping.			
Mounting	Simple snap-on system for DIN Rail TS35/7.5 or TS35/15 or chassis-mounted (optional screw mounting set SDN-PMBRK2 required).			
Connections	Input: IP20-rated screw terminals, connector size range: 16-10 AWG (1.5-6 mm²) for solid conductors. 16-12 AWG (0.5-4 mm²) for flexible conductors. Output: Two connectors per output, connector size range: 16-10 AWG (1.5 - 6 mm²) for solid conductors.			
Case	Fully enclosed metal housing with fine ventilation grid to keep out small parts.			
–Free Space	25 mm above and below, 25 mm left and right, 10 mm in front		25 mm above and below, 25 mm left and right, 15 mm in front	70 mm above and below, 25 mm left and right, 15 mm in front
H x W x D inches (mm)	4.88. x 1.97 x 4.55 (124.0 x 50.0 x 116.0)	4.88 x 2.56 x 4.55 (124.0 x 65.0 x 116.0)		4.88 x 3.26 x 4.55 (124.0 x 83.0 x 116.0)
Weight lbs (kg)	1.6 (.73)	2.4 (1.10)		3.3 (1.50)

1. Not UL listed for DC input.
2. Input current ratings are conservatively specified with low input, worst case efficiency and power factor.
3. Losses are heat dissipation in watts at full load, nominal input line.
4. Ripple/noise is stated as typical values when measured with a 20 MHz, bandwidth scope and 50 Ohm resistor.
5. Full load, 100 Vac Input @ T_{amb} = +25°C

Contact **Technical Services** at **(800) 377-4384** with any questions.
Visit our website at www.solahd.com.

SDN-P Series Dimensions

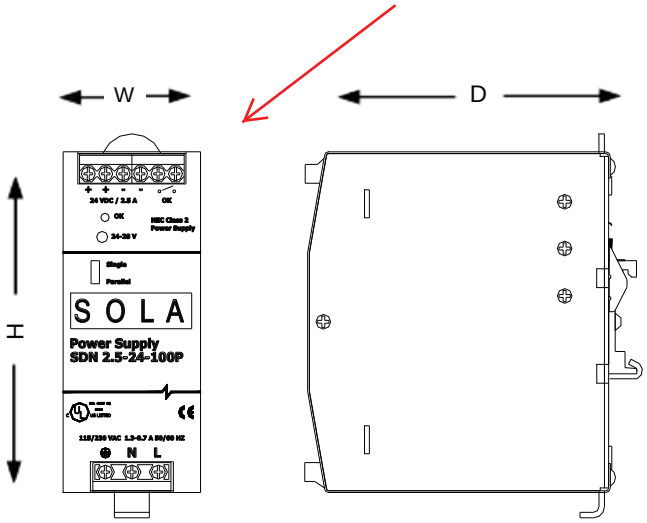

Catalog Number	Dimensions – inches (mm)		
	H	W	D
12 Vdc			
SDN 9–12–100P	4.88 (124.0)	2.56 (65.0)	4.55 (116.0)
SDN 16–12–100P	4.88 (124.0)	3.23 (83.0)	4.55 (116.0)
24 Vdc			
SDN 2.5–24–100P	4.88 (124.0)	1.97 (50.0)	4.55 (116.0)
SDN 4–24–100LP	4.88 (124.0)	2.56 (65.0)	4.55 (116.0)
SDN 5–24–100P	4.88 (124.0)	2.56 (65.0)	4.55 (116.0)
SDN 10–24–100P	4.88 (124.0)	3.26 (83.0)	4.55 (116.0)
48 Vdc			
SDN 5–48–100P	4.88 (124.0)	3.23 (83.0)	4.55 (116.0)

BOM #7

SOLAHD

Dry Contact Relay Kit

RELAYCARD-SDU

Instruction Manual

While every precaution has been taken to ensure accuracy and completeness in this manual, SolaHD assumes no responsibility, and disclaims all liability for damages resulting from use of this information or for any errors or omissions.

©2009 SolaHD. All rights reserved throughout the world. Specifications are subject to change without notice.

®SolaHD name and logo are registered trademarks of EGS Electrical Group, LLC. All names referred to are trademarks or registered trademarks of their respective owners.

Table of Contents

What's Included 4

Installation 4

Product Description 5–6

Notes 7

What's Included

- One dry contact relay box
- One interface cable (DB-9 connector)
- One 12 V dc power interconnection cable
- Four M3 mounting screws

Installation

⚠ DANGER **Only qualified personnel should install or service this system. Electrical safety precautions must be followed when installing or servicing this equipment. To prevent risk of electrical shock, turn off and lock out all power sources to the unit before making electrical connections.**

1. Using the four M3 screws provided, mount the dry relay box on the right side of the SDU UPS. If mounting on a separate chassis, the hole diameter for the relay box is 0.378 in. (3.5 mm).

2. Plug the 12 V dc power interconnection cable into the 12 V dc input of the relay box. Plug the other end of the power interconnection cable into the aux dc output (or Vout) of the SDU UPS.

3. Plug the DB-9 connector cable into the RS232 communication port of the SDU UPS. Plug the other end of the connector into the remote port of the dry contact relay.

Product Description

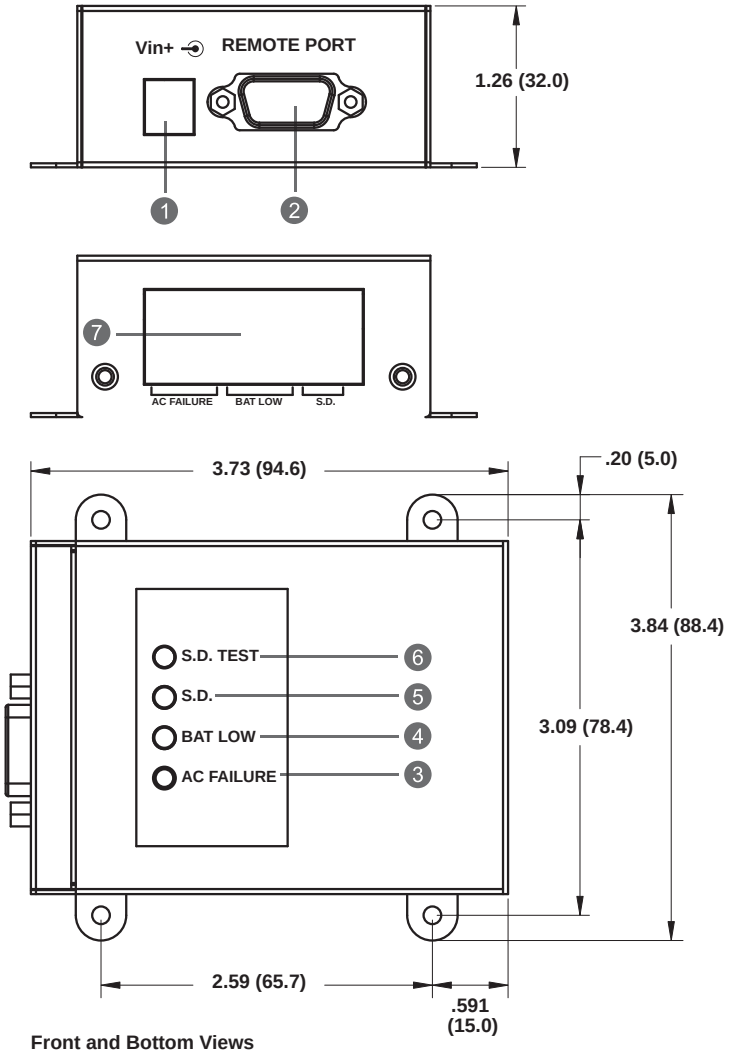

Front and Bottom Views
All dimensions are in inches (mm)

1. **Vin:** Input connector used to provide the dry contact relay with 12 V dc input power.
2. **Remote Port:** This communication port is used for linking to the SDU UPS.

   NOTE: The provided connection cable is used only for this dry contact relay.
3. **Ac Failure Indicator:** This yellow LED is illuminated when ac voltage is abnormal.
4. **Battery Low Indicator:** This green LED is illuminated when battery capacity is low.
5. **Shut Down Indicator (S.D.):** When the dry contact relay receives the shut down signal for 1 second, the red LED is illuminated and the SDU UPS goes into shut down mode.

Product Description continued from page 5

6. Shut Down Test Button (S.D. Test): Provides the dry contact relay a shut down signal to test the shut down function when the UPS is operating in the battery mode. Push this button for 1 second and the red LED is illuminated. The SDU UPS goes into shut down mode after 3 minutes.

7. 8 Pole Terminal Blocks

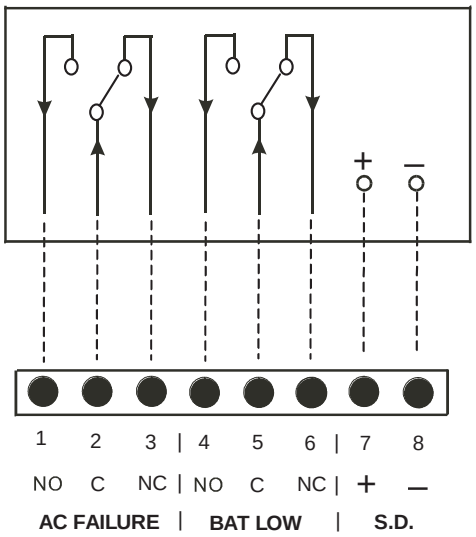

Table 1: Terminal Blocks—Layout and Operation

+UPS State		External Input	DCB LED Display			Terminal Blocks			
O = Occur X = Does not occur		O = Enable X = Disable	O = LED On X = LED Off			O = Close X = Open			
Ac Failure	BAT Low	S.D.	Yellow	Green	Red	Pin 1–2	Pin 2–3	Pin 4–5	Pin 5–6
X	X	X	X	X	X	X	O	X	O
O	X	X	O	X	X	O	X	X	O
O	O	X	X	O	X	O	X	O	X
O	X	O	X	X	O	X	O	X	O

Notes

1. Suitable electric wire = AWG 22–12 (IEC 2.5 mm).

2. Contact maximum current = 1.0 A @ 250 V ac.

3. Shut down input signal (range = +5 V to +12 V) can be provided by enabling terminals 7 and 8 for remote shut down control, assured by an external remote device.

Technical Support
U.S.: (800) 377-4384
International: (847) 268-6000
E-mail: www.tech@solahd.com
Web site: www.solahd.com

Part Number: A272-081 Rev 7
May 20, 2009

BOM #8

Selection Guide

Allen-Bradley

CompactLogix System

Catalog Numbers 1769-L16ER-BB1B, 1769-L18ER-BB1B, 1769-L18ERM-BB1B, 1769-L24ER-QB1B, 1769-L24ER-QBFC1B, 1769-L27ERM-QBFC1B, 1769-L30ER, 1769-L30ER-NSE, 1769-L30ERM, 1769-L33ER, 1769-L33ERM, 1769-L36ERM, 1769-AENTR, 1768-L43, 1768-L43S, 1768-L45, 1768-L45S

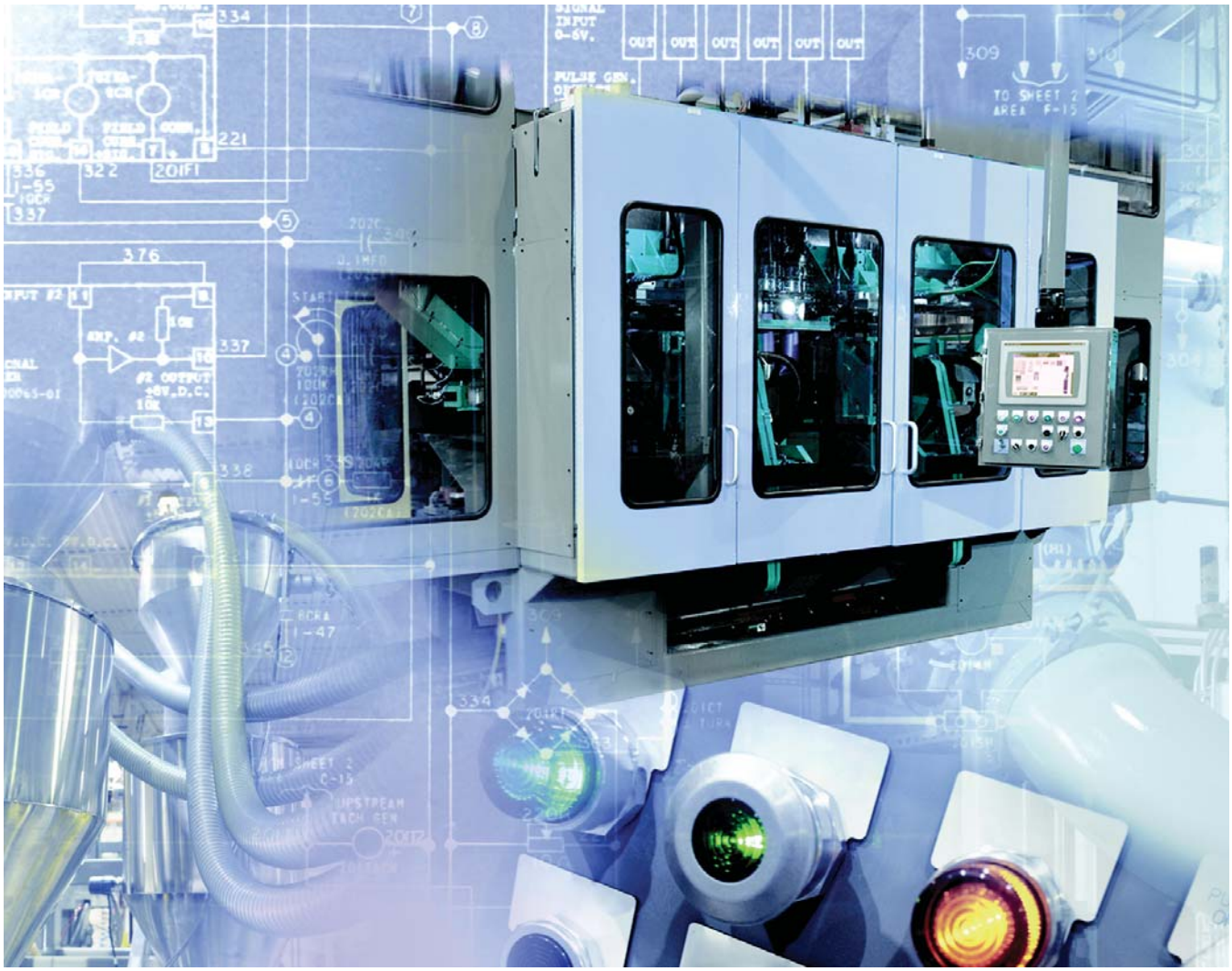

1734 POINT I/O Modules
1769 Compact I/O Modules
1768 Integrated Motion Modules
1768 and 1769 Communication Modules
1768 and 1769 CompactLogix Controllers
1768 and 1769 Compact Power Supplies

LISTEN. THINK. SOLVE.®

Allen-Bradley • Rockwell Software

Rockwell Automation

CompactLogix Communication Options

You can configure your system for information exchange between a range of devices and computing platforms and operating systems. Select a CompactLogix controller with integrated communication or the appropriate communication module.

For detailed specifications, see:

- CompactLogix Controllers Specifications Technical Data, publication 1769-TD005.
- CompactLogix Communication Modules Specifications Technical Data, publication 1769-TD007.

EtherNet/IP Communication Options

The Ethernet Industrial network protocol (EtherNet/IP) is an open industrial-networking standard that supports both real-time I/O messaging and message exchange. The EtherNet/IP network uses off-the-shelf Ethernet communication chips and physical media.

Dual-port EtherNet/IP support embeds switch technology directly in the controller to so the controller can operate on star, linear, or ring EtherNet/IP topologies.

Cat. No.	Description	Communication Rate	Logix Resources[1]	TCP/IP Connections
1769-L16ER-BB1B,	CompactLogix 5370 L1 controller with integrated EtherNet/IP dual-port, POINT I/O form factor	10/100 Mbps	4 nodes 256 EtherNet/IP connections	120
1769-L18ER-BB1B, 1769-L18ERM-BB1B			8 nodes 256 EtherNet/IP connections	
1769-L24ER-BB1B, 1769-L24ER-QBFC1B	CompactLogix 5370 L2 controller with integrated EtherNet/IP dual-port, Compact I/O form factor	10/100 Mbps	8 nodes 256 EtherNet/IP connections	120
1769-L27ERM-QBFC1B		10/100 Mbps	16 nodes 256 EtherNet/IP connections	
1769-L30ER, 1769-L30ERM	CompactLogix 5370 L3 controller with integrated EtherNet/IP dual-port	10/100 Mbps	16 nodes 256 EtherNet/IP connections	120
1769-L33ER, 1769-L33ERM			32 nodes 256 EtherNet/IP connections	
1769-L36ERM			48 nodes 256 EtherNet/IP connections	
1769-AENTR	1769 EtherNet/IP adapter	10/100 Mbps	128 EtherNet/IP connections	96
1768-ENBT	1768 EtherNet/IP communication bridge module	10/100 Mbps	128 EtherNet/IP connections	64
1768-EWEB	1768 Ethernet web server module	10/100 Mbps	128 EtherNet/IP connections	64

(1) The number of nodes listed for CompactLogix 5370 controllers represents the maximum number of EtherNet/IP nodes you can include in a Logix Designer application project for those controller. For example, in a Logix Designer application project that uses a 1769-L18ERM-BB1B controller, you can add as many as 8 EtherNet/IP nodes to the project.

1734 Specialty I/O Modules

Cat. No.	Description	Wiring Base	POINTBus Current
1734-232ASC	The 1734-232ASC and 1734-485ASC serial interface modules offer a serial-link communication interface solution for peripheral products with RS-232 (only 1734-232ASC), RS-485, and RS-422 ports (only 1734-485ASC.)	1734-TB, 1734-TBS	75 mA
1734-485ASC			
1734-ARM	The 1734-ARM address reserve module reserves address and slot numbers to maintain a numbering scheme of an existing system. The 1734-ARM has no module configuration and does not communicate I/O data.	1734-TB, 1734-TBS	75 mA
1734-CTM	The common terminal module (1734-CTM) and voltage term66inal module (1734-VTM) expand the termination capabilities of POINT I/O modules. Install the modules to provide support for higher density (8 channel) POINT I/O modules.	1734-TB, 1734-TBS, 1734-TOP, 1734-TOPS	75 mA
1734-VTM			
1734-SSI	The 1734-SSI module collects serial data from absolute-position, encoding sensors that use standard Synchronous Serial Interface (SSI) protocol.	1734-TB, 1734-TBS	110 mA

1769 Compact I/O Modules

The 1769 Compact I/O modules can be installed on the CompactLogix 5370 L2 and L3 controllers and 1768 CompactLogix controllers. The modules mechanically lock together by means of a tongue-and-groove design and have an integrated communication bus that is connected from module to module by a moveable bus connector.

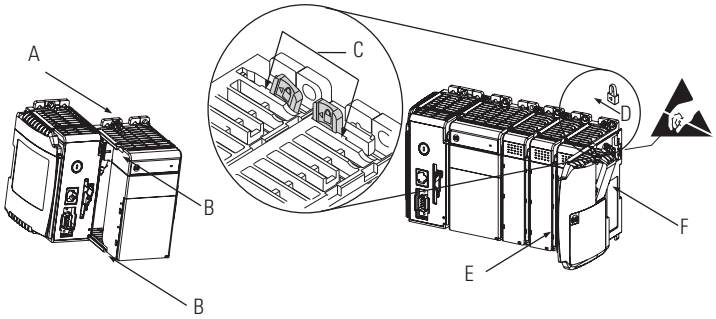

Each I/O module includes a built-in removable terminal block with finger-safe cover for connections to I/O sensors and actuators. The terminal block is behind a door at the front of the module. I/O wiring can be routed from beneath the module to the I/O terminals.

For detailed specifications, see 1769 Compact I/O Modules Specifications Technical Data, publication 1769-TD006.

Power Supply Distance Ratings

Check each module's specification table for the power supply distance rating. This indicates how many slot positions the module can be from the power supply.

1769 AC Digital Modules

Cat. No.	Inputs/Outputs	Voltage Category	Operating Voltage Range	Backplane Current	Power Supply Distance Rating
1769-IA8I	8 inputs, individually isolated	100/120V AC	79…132V AC, 47…63 Hz	90 mA @ 5.1V(1)	8
1769-IA16	16 inputs	100/120V AC	79…132V AC, 47…63 Hz	115 mA @ 5.1V	8
1769-IM12	12 inputs	200/240V AC	159…265V AC, 47…63 Hz	100 mA @ 5.1V	8
1769-OA8	8 outputs	100/240V AC	85…265V AC 47…63 Hz	145 mA @ 5.1V	8
1769-OA16	16 outputs	100/240V AC	85…265V AC 47…63 Hz	225 mA @ 5.1V	8

(1) Maximum is 190 mA.

1769 DC Digital Modules

Cat. No.	Inputs/Outputs	Voltage Category	Operating Voltage Range	Backplane Current	Power Supply Distance Rating
1769-IG16	16 inputs	5V DC TTL	4.5…5.5V DC	120 mA @ 5.1V	8
1769-IQ16	16 inputs	24V DC sink/source	10…30V DC @ 30 °C (86 °F) 10…26.4V DC @ 60 °C (140 °F)	115 mA @ 5.1V	8
1769-IQ16F	16 inputs, high-speed	24V DC sink/source	10…30V DC @ 30 °C (86 °F) 10…26.4V DC @ 60 °C (140 °F)	100 mA @ 5.1V	8
1769-IQ32	32 inputs	24V DC sink/source	10…30V DC @ 30 °C (86 °F) 10…26.4V DC @ 60 °C (140 °F)	170 mA @ 5.1V	8
1769-IQ32T	32 inputs	24V DC sink/source	20.4…26.4V DC @ 60 °C (140 °F)	170 mA @ 5.1V	8
1769-IQ6XOW4	6 inputs 4 outputs	24V DC sink/source input AC/DC normally open relay contact outputs	10…30V DC @ 30 °C (86 °F) 10…26.4V DC @ 60 °C (140 °F)	105 mA @ 5.1V 50 mA @ 24V	8
1769-OB8	8 outputs	24V DC source	20.4…26.4V DC	145 mA @ 5.1V	8
1769-OB16	16 outputs	24V DC source	20.4…26.4V DC	200 mA @ 5.1V	8
1769-OB16P	16 outputs, protected	24V DC source	20.4…26.4V DC	160 mA @ 5.1V	8
1769-OB32	32 outputs	24V DC source	20.4…26.4V DC	300 mA @ 5.1V	6
1769-OB32T	32 outputs	24V DC source	10.2…26.4V DC	220 mA @ 5.1V	8
1769-OG16	16 outputs	5V DC TTL	4.5…5.5V DC	200 mA @ 5.1V	8
1769-OV16	16 outputs	24V DC sink	20.4…26.4V DC	200 mA @ 5.1V	8
1769-OV32T	32 outputs	24V DC sink	10.2…26.4V DC	300 mA @ 5.1V	8

1769 Contact Output Modules

Cat. No.	Inputs/Outputs	Operating Voltage Range	Backplane Current	Power Supply Distance Rating
1769-OW8	8 outputs	5…265V AC 5…125V DC	125 mA @ 5.1V 100 mA @ 24V	8
1769-OW8I	8 outputs, individually isolated	5…265V AC 5…125V DC	125 mA @ 5.1V 100 mA @ 24V	8
1769-OW16	16 outputs	5…265V AC 5…125V DC	205 mA @ 5.1V 180 mA @ 24V	8

1769 Analog Modules

Cat. No.	Inputs/Outputs	Range	Resolution	Backplane Current	Power Supply Distance Rating
1769-IF4	4 inputs, differential or single-ended	±10V, 0…10V, 0…5V, 1…5V 0…20 mA, 4…20 mA	14 bits (unipolar) 14 bits plus sign (bipolar)	120 mA @ 5.1V 60 mA @ 24V	8
1769-IF4I	4 inputs, differential or single-ended, individually isolated	±10V, 0…10V, 0…5V, 1…5V 0…20 mA, 4…20 mA	16 bits (unipolar) 15 bits plus sign (bipolar)	145 mA @ 5.1V 125 mA @ 24V	8
1769-IF8	8 inputs, differential or single-ended	±10V, 0…10V, 0…5V, 1…5V 0…20 mA, 4…20 mA	16 bits (unipolar) 15 bits plus sign (bipolar)	120 mA @ 5.1V 70 mA @ 24V	8
1769-IF16C	16 inputs, single-ended	0…20 mA, 4…20 mA	16 bits (unipolar) 15 bits plus sign (bipolar)	190 mA @ 5.1V 70 mA @ 24V	8
1769-IF16V	16 inputs, differential	±10V, 0…10V, 0…5V, 1…5V	16 bits (unipolar) 15 bits plus sign (bipolar)	190 mA @ 5.1V 70 mA @ 24V	8
1769-IF4XOF2	4 differential or single-ended inputs 2 single-ended outputs	0…10V 0…20 mA	Input: 8 bits plus sign Output: 8 bits plus sign	120 mA @ 5.1V 160 mA @ 24V	8
1769-IF4FXOF2F	4 fast differential or single-ended inputs 2 fast single-ended outputs	±10V, 0…10V, 0…5V, 1…5V 0…20 mA, 4…20 mA	Input: 14 bits (unipolar) 14 bits plus sign (bipolar) Output: 13 bits (unipolar) 13 bits plus sign (bipolar)	220 mA @ 5.1V 120 mA @ 24V	8
1769-OF2	2 outputs, single-ended	±10V, 0…10V, 0…5V, 1…5V 0…20 mA, 4…20 mA	14 bits (unipolar) 14 bits plus sign (bipolar)	120 mA @ 5.1V 120 mA @ 24V	8
1769-OF4	4 outputs, single-ended	±10V, 0…10V, 0…5V, 1…5V 0…20 mA, 4…20 mA	15 bits plus sign unipolar and bipolar	120 mA @ 5.1V 170 mA @ 24V	8
1769-OF4CI	4 outputs, differential, individually isolated	0…20 mA 4…20 mA	16 bits (unipolar)	140 mA @ 5.1V 145 mA @ 24V	8
1769-OF4VI	4 outputs, differential, individually isolated	±10V 0…10V 0…5V 1…5V	15 bits plus sign (bipolar)	145 mA @ 5.1V 75 mA @ 24V	8
1769-OF8C	8 outputs, single-ended	0…20 mA 4…20 mA	16 bits (unipolar)	140 mA @ 5.1V 145 mA @ 24V	8
1769-OF8V	8 outputs, single-ended	±10V 0…10V 0…5V 1…5V	16 bits plus sign (bipolar)	145 mA @ 5.1V 125 mA @ 24V	8

1769 Expansion Cables

If you divide 1769 modules into multiple banks, make sure:

- each bank needs its own power supply.
- use expansion cables to connect the banks.
- the last I/O bank requires an end cap.

Vertical

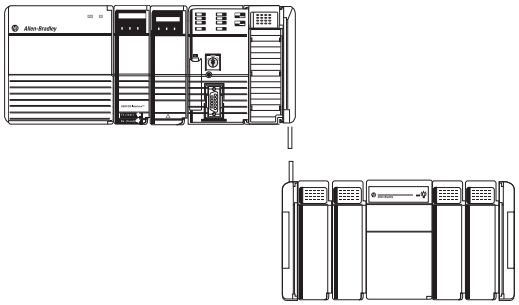

Horizontal

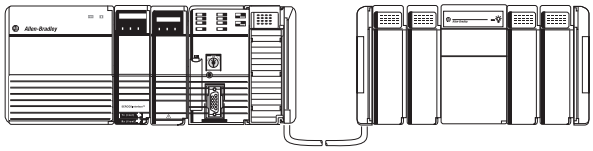

How you orient I/O banks determines the expansion cables you need to connect the I/O banks.

If you add a	And connect the chassis	Use this cable[1]
Second bank	Right to left	1769-CRL*x*
	Right to right	1769-CRR*x*
Third bank	Right to left	1769-CRL*x*
	Right to right	1769-CRR*x*
	Left to left	1769-CLL*x*

(1) Where *x* = 1 for 1 ft (305 mm) or 3 for 3.28 ft (1 m).

1769 End Caps

The final 1769 Compact I/O bank requires an end cap on the end without the expansion cable. The CompactLogix 5370 L2 controller comes with a right-end cap, so you do not need to order one separately.

- Right end cap, catalog number 1769-ECR
- Left end cap, catalog number 1769-ECL

CompactLogix Power Supplies

Select power supplies based on the controller and the number of additional I/O banks.

For a	Select
CompactLogix 5370 L3 controller	• One 1769 power supply for the controller and local I/O modules • One 1769 power supply for each additional bank of I/O modules
CompactLogix 5370 L2 controller	No power supply as it is integral to the controller package
CompactLogix 5370 L1 controller	No power supply as it is integral to the controller package
1768 CompactLogix controller	• One 1768 power supply for the controller and 1768 modules • One 1769 power supply for each additional bank of I/O modules

Power Supplies

Cat. No.	Description	Voltage Category	Operating Voltage Range
1769-PA2	1769 Compact I/O expansion power supply	120V/220V AC	85...265V AC
1769-PB2		24V DC	19.2...31.2V DC
1769-PA4		120V/220V AC	85...265V AC or 170...265V AC (switch selectable) 47...63 Hz
1769-PB4		24V DC	19.2...31.2V DC
1768-PA3	1768 CompactLogix power supply	120V/220V AC	85...265V AC or 108...132V DC
1768-PB3		24V DC	16.8...31.2V DC

For detailed specifications, see Compact Power Supplies Specifications Technical Data, publication 1769-TD008.

CompactLogix Power Supplies Specifications

1768 CompactLogix Power Supplies Catalog Numbers 1768-PA3, 1768-PB3

1769 Compact I/O Power Supplies Catalog Numbers 1769-PA2, 1769-PB2, 1769-PA4, 1769-PB4

Topic	Page
1768 CompactLogix Power Supplies	3
1769 Compact I/O Power Supplies	7

Environmental Specifications - 1768 and 1769 Power Supplies

Attribute	1768-PA3, 1769-PB3 1769-PA2, 1769-PB2, 1769-PA4, 1769-PB4
Temperature, operating IEC 60068-2-1 (Test Ad, Operating Cold), IEC 60068-2-2 (Test Bd, Operating Dry Heat), IEC 60068-2-14 (Test Nb, Operating Thermal Shock)	0…60 °C (32…140 °F)
Temperature, storage IEC 60068-2-1 (Test Ab, Unpackaged Nonoperating Cold), IEC 60068-2-2 (Test Bb, Unpackaged Nonoperating Dry Heat), IEC 60068-2-14 (Test Na, Unpackaged Nonoperating Thermal Shock)	-40…85 °C (-40…185 °F)
Relative humidity IEC 60068-2-30 (Test Db, Unpackaged Nonoperating Damp Heat)	5…95% noncondensing
Vibration IEC 60068-2-6 (Test Fc, Operating)	5 g @ 10…500 Hz
Shock, operating IEC 60068-2-27 (Test Ea, Unpackaged Shock)	30 g
Shock, nonoperating IEC 60068-2-27 (Test Ea, Unpackaged Shock)	50 g

Important User Information

Solid state equipment has operational characteristics differing from those of electromechanical equipment. Safety Guidelines for the Application, Installation and Maintenance of Solid State Controls (publication SGI-1.1 available from your local Rockwell Automation sales office or online at http://www.rockwellautomation.com/literature/) describes some important differences between solid state equipment and hard-wired electromechanical devices. Because of this difference, and also because of the wide variety of uses for solid state equipment, all persons responsible for applying this equipment must satisfy themselves that each intended application of this equipment is acceptable.

In no event will Rockwell Automation, Inc. be responsible or liable for indirect or consequential damages resulting from the use or application of this equipment.

The examples and diagrams in this manual are included solely for illustrative purposes. Because of the many variables and requirements associated with any particular installation, Rockwell Automation, Inc. cannot assume responsibility or liability for actual use based on the examples and diagrams.

No patent liability is assumed by Rockwell Automation, Inc. with respect to use of information, circuits, equipment, or software described in this manual.

Reproduction of the contents of this manual, in whole or in part, without written permission of Rockwell Automation, Inc., is prohibited.

Throughout this manual, when necessary, we use notes to make you aware of safety considerations.

WARNING	Identifies information about practices or circumstances that can cause an explosion in a hazardous environment, which may lead to personal injury or death, property damage, or economic loss.
IMPORTANT	Identifies information that is critical for successful application and understanding of the product.
ATTENTION	Identifies information about practices or circumstances that can lead to personal injury or death, property damage, or economic loss. Attentions help you identify a hazard, avoid a hazard, and recognize the consequence
SHOCK HAZARD	Labels may be on or inside the equipment, for example, a drive or motor, to alert people that dangerous voltage may be present.
BURN HAZARD	Labels may be on or inside the equipment, for example, a drive or motor, to alert people that surfaces may reach dangerous temperatures.

Rockwell Automation, Rockwell Software, Allen-Bradley, TechConnect, Compact I/O, and CompactLogix are trademarks of Rockwell Automation, Inc.

Trademarks not belonging to Rockwell Automation are property of their respective companies.

1769 Compact I/O Power Supplies

Each 1769-L3*x* controller and additional bank of I/O modules requires a 1769 power supply. Place 1769 I/O modules to the left or right of the 1769 power supply. As many as eight I/O modules can be placed on each side of the power supply.

Each 1769 module also has a power supply distance rating (the number of modules from the power supply). Each module must be located within its distance rating. See the specifications for the module to determine its distance rating.

Technical Specifications - 1769 Compact I/O Power Supplies

Attribute	1769-PA2	1769-PB2	1769-PA4	1769-PB4
Input voltage range	85…265V AC	19.2...31.2V DC	85…265V AC or 170...265V AC, switch selectable	19.2...31.2V DC
Input voltage, nom	120V/220V AC	24V DC	120V/220V AC	24V DC
Power consumption	100 VA @ 120V AC 130 VA @ 240V AC	50 VA @ 24V DC	200 VA @ 120V AC 240 VA @ 240V AC	100 VA @ 24V DC
Power dissipation	8 W @ 60° C (140° F)	7.5 W @ 60° C (140° F)	18 W @ 60° C (140° F)	14.5 W @ 60° C (140° F)
Current capacity @ 5V	2.0 A	2.0 A	4.0 A	4.0 A
Current capacity @ 24V	0.8 A	0.8 A	2.0 A	2.0 A
Inrush current, max	25 A @ 132V AC	30 A @ 31.2V DC	25 A @ 132V AC	30 A @ 31.2V DC
Isolation voltage	265V (continuous), reinforced insulation type (IEC Class 1 grounding required) Routine tested @ 2596V DC for 1 s, AC power input to system and AC power input to 24V DC user power	75V (continuous), reinforced insulation type (IEC Class 1 grounding required) Routine tested at 1697V DC for 1 s, DC power input to system	265V (continuous), reinforced insulation type (IEC Class 1 grounding required) Routine tested at 2596V DC for 1 s, AC power input to system	75V (continuous), reinforced insulation type (IEC Class 1 grounding required) Routine tested at 1697V DC for 1 s, DC power input to system
Fuse type	Wickmann 19195-3.15A Littelfuse 02183.15MXP	Wickmann 19193-6.3A Littelfuse 021706.3MXP	Wickmann 19195-3.15A Littelfuse 02183.15MXP	Wickmann 19193-6.3A Littelfuse 021706.3MXP
Weight, approx.	525 g (1.16 lb)		630 g (1.39 lb)	
Dimensions (HxWxD), approx.	118 x 70 x 87 mm (4.65 x 2.76 x 3.43 in.)			
Module location	DIN rail or panel mount			
Mounting screw torque	1.16 N•m (10 lb•in) - use M4 or #8 screws			
Power supply distance rating	8 8 I/O modules can be connected on either side of the power supply for a maximum of 16 modules			
Wire category[1]	1 - on power ports	2 - on power ports	1 - on power ports	2 - on power ports
Wire size	14 AWG (2.5 mm^2) solid copper wire rated at 90 °C (194 °F) or greater, 1.2 mm (3/64 in.) insulation max			
North American temperature code	T3C			
IEC temperature code	—	T4	—	T4
Enclosure type rating	None (open-style)			

[1] Use this conductor category information for planning conductor routing as described in the system level installation manual. See the Industrial Automation Wiring and Grounding Guidelines, publication 1770-4.1.

Certifications - 1769 Compact Power Supplies

Certification[1]	1769-PA2, 1769-PA4	1769-PB2, 1769-PB4
c-UL-us	UL Listed for Class 1, Division 2 Group A,B,C,D Hazardous Locations, certified for U.S. and Canada. See UL File E10314	
CE	European Union 2004/108/EC EMC Directive, compliant with: • EN 61000-6-2; Industrial Immunity • EN 61000-6-4; Industrial Emissions	
C-Tick	Australian Radiocommunications Act, compliant with: AS/NZS CISPR 11; Industrial Emissions	
	—	European Union 94/9/EC ATEX Directive, compliant with: • EN 60079-15; Potentially Explosive Atmospheres, Protection “n” (Zone 2) • EN 60079-0; General Requirements (Zone 2)

(1) When marked. See the Product Certification link at http://www.ab.com for Declarations of Conformity, Certificates, and other certification details.

Power Requirements and Transformer Sizing - 1769 CompactLogix Power Supplies

1769-PA2 Output Derating

User +24V Current Draw at 0 A

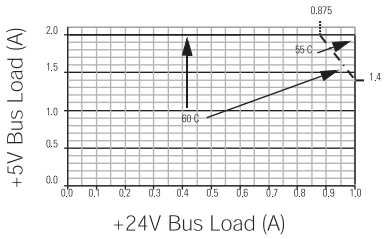

User +24V Current Draw at 0.2 A

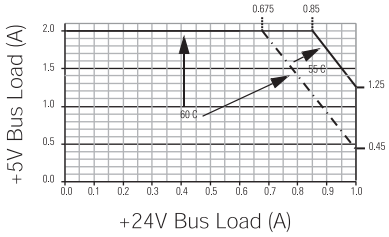

User +24V Current Draw at 0.25 A

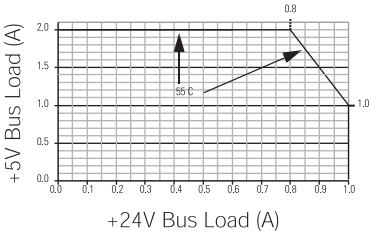

1769-PA2 Power Disspation

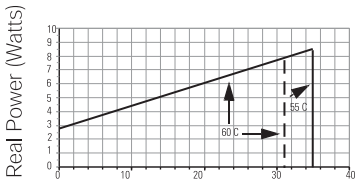

Bus +5V, +24V, and User Load (Watts)

1769-PB2 Output Derating

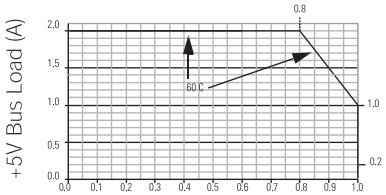

+24V Bus Load (A)

1769-PB2 Power Dissipation

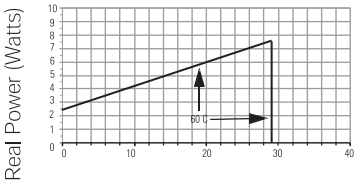

Bus +5V, +24V, and User Load (Watts)

1769-PA4 Output Derating

Total Output: 68 W @ 55 °C (131 °F) or below
61 W @ 60 °C (140 °F) or below

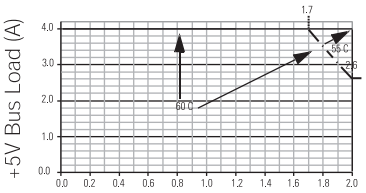

+24V Bus Load (A)

1769-PB4 Output Derating

Total Output: 68 W @ 55 °C (131 °F) or below
61 W @ 60 °C (140 °F) or below

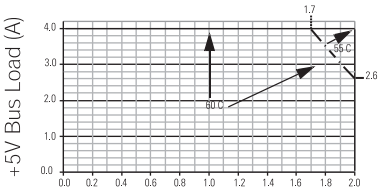

+24V Bus Load (A)

1769-PA4 Power Disspation

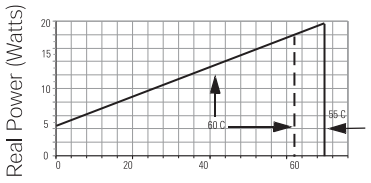

Bus +5V, +24V, and User Load (Watts)

1769-PB4 Power Disspation

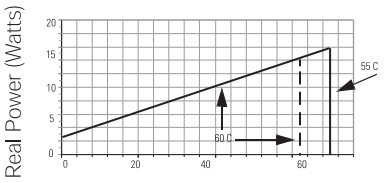

Bus +5V, +24V, and User Load (Watts)

Mounting Dimensions - 1769 CompactLogix Power Supplies

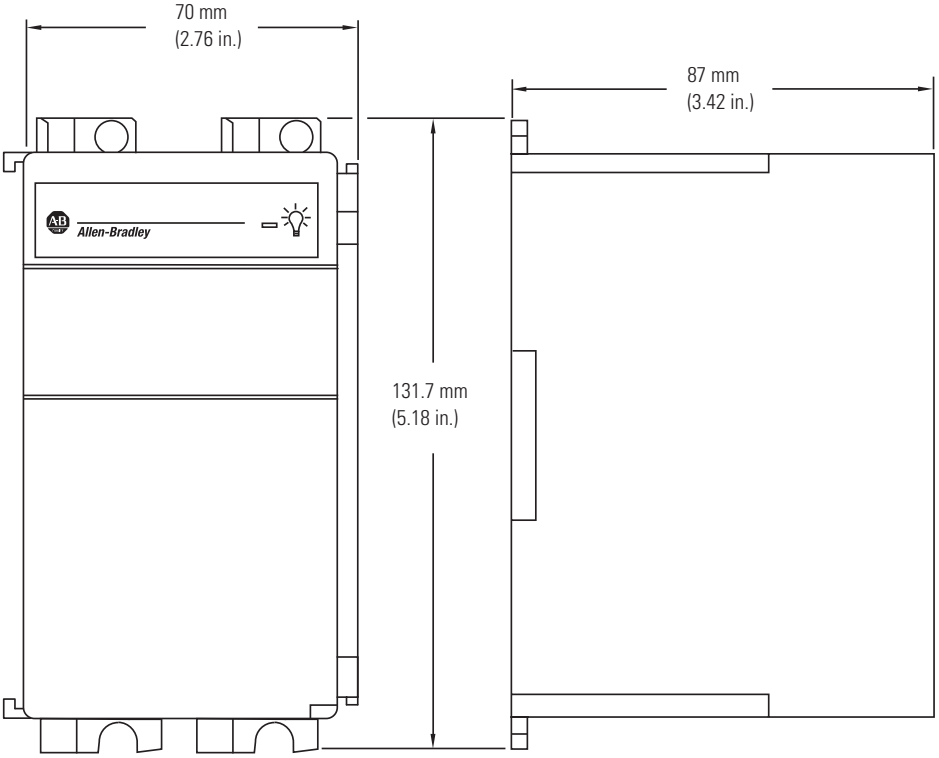

BOM #9

Panduct® Type F Narrow Slot Wiring Duct

- Narrow slot/finger design provides more slots to fit the spacing of high-density terminal blocks and other hardware
- Material: Lead-free PVC
- UL recognized continuous use temperature: 122°F (50°C)
- UL 94 flammability rating of V-0
- Conforms with NFPA 79-2007 section 13.3.1 requirement for flame retardant material
- Provided with mounting holes
- Base and cover length is 6 feet

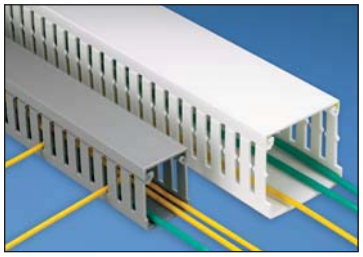

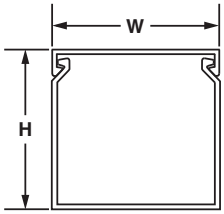

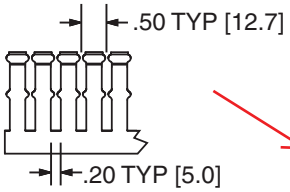

Multiple slot restrictors present with 2" and greater duct wall height.

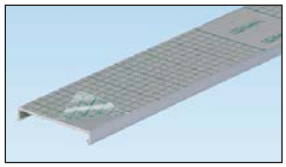

To order cover with protective film add "-F" to part number. 6" cover not available with film.

NEW!

Base Part Number	Duct Size (W x H)* In.	Duct Size (W x H)* mm	Slot Width In.	Slot Width mm	Cover Part Number	Std. Pkg. Qty.	Base Ctn. Qty.	Cover Ctn. Qty.
F.5X.5LG6	0.69 x 0.60	17.5 x 15.2	0.20	5.0	C.5LG6	6	120	120
F.5X1LG6	0.69 x 1.06	17.5 x 26.9	0.20	5.0	C.5LG6	6	120	120
F.75X.75LG6	0.93 x 0.82	23.6 x 20.9	0.20	5.0	C.75LG6	6	120	120
F.75X1.5LG6	0.93 x 1.57	23.6 x 39.9	0.20	5.0	C.75LG6	6	120	120
F1X1LG6	1.26 x 1.13	32.0 x 28.7	0.20	5.0	C1LG6	6	120	120
F1X1.5LG6	1.26 x 1.62	32.0 x 41.1	0.20	5.0	C1LG6	6	120	120
F1X2LG6	1.26 x 2.12	32.0 x 53.8	0.20	5.0	C1LG6	6	120	120
F1X3LG6	1.26 x 3.12	32.0 x 79.2	0.20	5.0	C1LG6	6	120	120
F1X4LG6	1.26 x 4.10	32.0 x 104.1	0.20	5.0	C1LG6	6	60	120
F1.5X1LG6	1.75 x 1.12	44.5 x 28.4	0.20	5.0	C1.5LG6	6	120	120
F1.5X1.5LG6	1.75 x 1.62	44.5 x 41.1	0.20	5.0	C1.5LG6	6	120	120
F1.5X2LG6	1.75 x 2.12	44.5 x 53.8	0.20	5.0	C1.5LG6	6	120	120
F1.5X3LG6	1.75 x 3.12	44.5 x 79.2	0.20	5.0	C1.5LG6	6	120	120
F1.5X4LG6	1.75 x 4.10	44.5 x 104.1	0.20	5.0	C1.5LG6	6	60	120
F2X1LG6	2.25 x 1.12	57.2 x 28.4	0.20	5.0	C2LG6	6	120	120
F2X1.5LG6	2.25 x 1.62	57.2 x 41.1	0.20	5.0	C2LG6	6	120	120
F2X2LG6	2.25 x 2.12	57.2 x 53.8	0.20	5.0	C2LG6	6	120	120
F2X3LG6	2.25 x 3.12	57.2 x 79.2	0.20	5.0	C2LG6	6	60	120
F2X4LG6	2.25 x 4.10	57.2 x 104.1	0.20	5.0	C2LG6	6	60	120
F2X5LG6	2.25 x 5.10	57.2 x 129.5	0.20	5.0	C2LG6	6	60	120
F2.5X3LG6	2.75 x 3.12	69.9 x 79.2	0.20	5.0	C2.5LG6	6	120	120
F3X1LG6	3.25 x 1.12	82.6 x 28.4	0.20	5.0	C3LG6	6	120	120
F3X2LG6	3.25 x 2.12	82.6 x 53.8	0.20	5.0	C3LG6	6	120	120
F3X3LG6	3.25 x 3.12	82.6 x 79.2	0.20	5.0	C3LG6	6	60	120
F3X4LG6	3.25 x 4.10	82.6 x 104.1	0.20	5.0	C3LG6	6	60	120
F3X5LG6	3.25 x 5.10	82.6 x 129.5	0.20	5.0	C3LG6	6	60	120
F4X2LG6	4.25 x 2.12	108.0 x 53.8	0.20	5.0	C4LG6	6	60	120
F4X3LG6	4.25 x 3.12	108.0 x 79.2	0.20	5.0	C4LG6	6	60	120
F4X4LG6	4.25 x 4.10	108.0 x 104.1	0.20	5.0	C4LG6	6	60	120
F4X5LG6	4.25 x 5.10	108.0 x 129.5	0.20	5.0	C4LG6	6	60	120
F6X4LG6	6.25 x 4.15	158.8 x 105.4	0.20	5.0	C6LG6	6	60	120

Part number shown for LG (Light Gray). For other color availability see color selection guide, page C1.48.
Base and cover sold separately.
*"H" dimension includes duct and cover.

A. System Overview
B1. Cable Ties
B2. Cable Accessories
B3. Stainless Steel Ties
C1. Wiring Duct
C2. Surface Raceway
C3. Abrasion Protection
C4. Cable Management
D1. Terminals
D2. Power Connectors
D3. Grounding Connectors
E1. Labeling Systems
E2. Labels
E3. Pre-Printed & Write-On Markers
E4. Permanent Identification
E5. Lockout/ Tagout & Safety Solutions
F. Index

Product: 700-HK32A1-3-4

Description: 700-HK General Purpose Slim Line Relay

BOM #11

Representative Photo Only
(actual product may vary based on configuration selections)

CONTROL RELAY DATA	
Contact Rating	8 Amp Contact (Slim Line Relay)
Contact Configuration	DPDT Contact Arrangement
Coil Voltage	120V 50/60Hz
Relay Option	No Additional Options

CERTIFICATIONS AND APPROVALS	
CE	Marked
UL	Listed with socket, Guide No. NLDX, File No. E3125
UR	Recognized, Guide No. NLDX2, File No. E3125
CSA	
For UL Certifications Directory:	http://database.ul.com/cgi-bin/XYV/template/LISEXT/1FRAME/index.htm

		Cat. No. 700-HK...			
Electrical Ratings					
Rated Thermal Current (I^{th})		1-Pole, 1 CO, SPDT — 16 A		2-Pole, 2 CO, DPDT — 8 A	
Rated Insulation Voltage (U_i)		250V IEC, 300V UL/CSA			
Contacts	Inductive V AC	120V AC	AC-15, 6.2 A B300 Pilot Duty, 3 A A300 (700-HKM_) 1/3 Hp (0.24 kW) 1-phase	120V AC	AC-15, 2.9 A B300 Pilot Duty, 3.0 A 1/4 Hp (0.18 kW), 1-phase
		240V AC	AC-15, 3.1 A B300 Pilot Duty, 1.5 A A300 (700-HKM_) 3/4 Hp (0.55 kW), 1-phase	240V AC	AC-15, 1.4 A B300 Pilot Duty, 1.5 A 1/2 Hp (0.37 kW), 1-phase
		230V AC	0.55 kW, 1-phase	230V AC	0.37 kW, 1-phase
	Inductive V DC	24V DC	DC-13, 5.0 A	24V DC	DC-13, 3.0 A
		125V DC	DC-13, 0.2 A R300 Pilot Duty, 0.22 A	125V DC	DC-13, 0.2 A R300 Pilot Duty, 0.22 A
		250V DC	DC-13, 0.1 A R300 Pilot Duty, 0.11 A	5 A, 250V AC	DC-13, 0.1 A R300 Pilot Duty, 0.11 A
	Resisitive	230V AC	AC-1, 16 A	230V AC	AC-1, 8 A
		277V AC	16 A, General Use	277V AC	8 A, General Use
	Make, Break & Continuous	30V DC	DC-1, 12 A 10 A, Resistive	30V DC	DC-1, 6 A 6 A, Resistive
Min. Permissible Contact Ratings		300 mW (5V/60 mA or 60V/5 mA) for AgNi Contacts (700-HK3_) 50 mW (5V/10 mA or 25V/2 mA) for AgNi + Gold Contacts (700-HKX_) 500 mW (100V/5 mA or 5V/100 mA) for $AgSnO_2$ Contacts (700-HKM_)			
Permissible Coil Voltage Variation	Pickup: holding Voltage: Must Dropout Voltage:	80...110% of Nominal Voltage at 50/60 Hz, 73...110% of Nominal Voltage at DC 80% of Nominal V AC at 50/60 Hz, 40% of Nominal V DC 20% of Nominal V AC at 50/60 Hz, 10% Nominal V DC			
Power Consumption		1.2V A (V AC Coils), 0.5 W (V DC Coils)			
Coil Voltages		See Overview/Product Selection			
Design Specification/Test Requirements					
Dielectric Withstand Voltage	Between Open Contacts (VRMS)	1000V AC			
	Contact to Coil (VRMS)	1600V AC			
Mechanical					
Degree of Protection		IP 20 (guarded terminal sockets), RT II — Flux-proof (Relay)			
Mechanical Life Operations		10 x 10^6			
Electrical Life Cycles		230V AC, 16 A Resistive: 100 000 min. 277V AC, 16 A Resistive: 30 000 min. 30V DC, 10 A Resisitive: 30 000 min. B300, R300, Hp (kW): 6000 min. A300 (700-HKM_): 100,000 min.		230V AC, 8 A Resistive: 100 000 min. 277V AC, 8 A Resistive: 30 000 min. 30V DC, 6 A Resistive: 30 000 min. B300, R300, Hp (kW): 6000 min.	
Switching Frequency		Mechanical: 18,000 cycles/hr. Electrical: 900 cycles/hr.			
Operating Time at Nominal Voltage at 20 °C (ms)	Pickup	15 ms max.			
	Dropout	5 ms max.			
Vibration	Operational	10...2000 Hz, 0.76 mm (0.03 in.) 2.5 G			
	Non-Operational	10...2000 Hz, 0.76 mm (0.03 in.) 5.0 G			
Shock	Operational	15 G			
	Non-Operational	50 G			
Environmental					
Temperature	Operating	–40...+70 °C (–40...+158 °F)			
	Storage	–40...+85 °C (–40...+185 °F)			
Altitude		2000 m (6560 ft)			
Construction					
Insulating Material		Molded High Dielectric Material			
Enclosure		Transparent Dust Cover			
Contact Material		700-HK3_: Silver nickel (AgNi); 700-HKX_: Silver Nickel + Gold Plating (AgNi + Au); 700-HKM_: Silver Tin Oxide ($AgSnO_2$)			
Terminal Markings on Socket		In accordance with EN 50005			
Sockets		**1-Pole**		**2-Pole**	
	Screw Terminal	700-HN121 (10 A @ 70 °C) 700-HN221 (16 A @ 50 °C, 12 A @ 70 °C)		700-HN122 (2 x 5 A @ 70 °C) 700-HN222 (2 x 8 A @ 70 °C)	
	Spring Clamp (Available September 2006)	700-HN223 (15 A @ 40 °C with 2 conductors per terminal) (10 A @ 70 °C with 1 conductor per terminal)		700-HN224 (2 x 8 A@ 70 °C)	
Approvals					
Certifications		CSA Certified, File 75088, UL Recognized, File E3125 Guide NLDX2/NLCX8, cULus Listed with Allen-Bradley sockets (File No. 3125 Guide NLDX/NLDX7), CE Marked			
Standards		EN61810-1, CSA 22.2 No. 14, UL 508			

http://raise.rockwellautomation.com/raconfig/rtcache/jpg/700-hk%20specs.jpg[10/7/2015 4:14:36 PM]

BOM #12

Product: 1492-J3

Description: 1492 IEC Screw Terminal Blocks

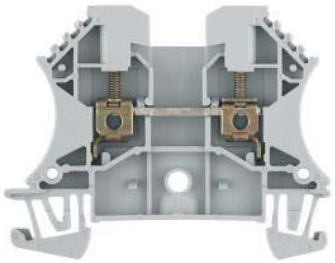

Representative Photo Only (actual product may vary based on configuration selections)

BLOCK STYLE	
Base Block Style	Standard Feed-Through Blocks
BASE DATA	
Base Block Type	One-Circuit Feed-Through Block
DETAIL DATA	
Features	Standard Feedthrough
Maximum Wire Size & Rating	UL: 30-12 AWG (25A @600V AC/DC)\nCSA: 26-12 AWG (20A @600V AC/DC)\nIEC: 2.5mm² (24A @800V AC/DC)\nEEx e II: 2.5mm²/20-14 AWG (21A @ 550V AC/DC)
Color	Gray (Standard)
CERTIFICATIONS AND APPROVALS	
UR	UL 486E, UL 1059; Reference File: E40735, E187022
CSA	CSA C22.2 No. 65, No. 158; On Website, Name: Rockwell, Keyword Search: 1492
IEC	EN 60947-1, EN 60947-7-1(Feed-Through), -2(Ground), -3(Fuse)
ATEX	http://www.rockwellautomation.com/products/certification/ex/excert.html
Short Circuit Current Rating	This terminal block carries a minimum of 10kA SCCR rating for all protection methods. Please see the table for other possible elevated ratings.
For CSA Certifications:	http://directories.csa-international.org/directorymain.asp
For UL Certifications Directory:	http://database.ul.com/cgi-bin/XYV/template/LISEXT/1FRAME/index.htm

Bulletin 931 Analog Signal Conditioners

BOM #14

Analog Signal

Analog Signal Conditioners are designed for use with Rockwell Automation I/O systems to provide reduced installation and maintenance costs in process applications. The products are available with single, 2-way or 3-way isolation and provide the following functionality.

- Isolation of analog measurement and control signals
- Conversion of analog signals from Voltage to Current (i.e., 0-10V to 4-20 mA)
- Amplification, linearization and transmission of low-level sensor signals (i.e., mV signals from thermocouples)
- Transmission of analog signals over long distances
- Provide local status indications and alarms via relay contact closures based on the analog signals
- Multiple products are approved to be used in hazardous location environments - UL (Class 1, Div 2) and ATEX (Zone 2)

Typical Applications

- Feed and Conveyor Control
- Boiler and Heat Control
- Water & Effl uent Treatment
- Machine Speed and Power
- Product Thickness and Alignment
- Batching, Mixing and Weighing
- Crystallization Control
- Valve Position Control
- Tanks and Silos – Inventory Control
- Chemical Dosing
- Safety Interlocks and Shutdown
- Pollution Control
- Refrigeration and Storage
- Dust Control

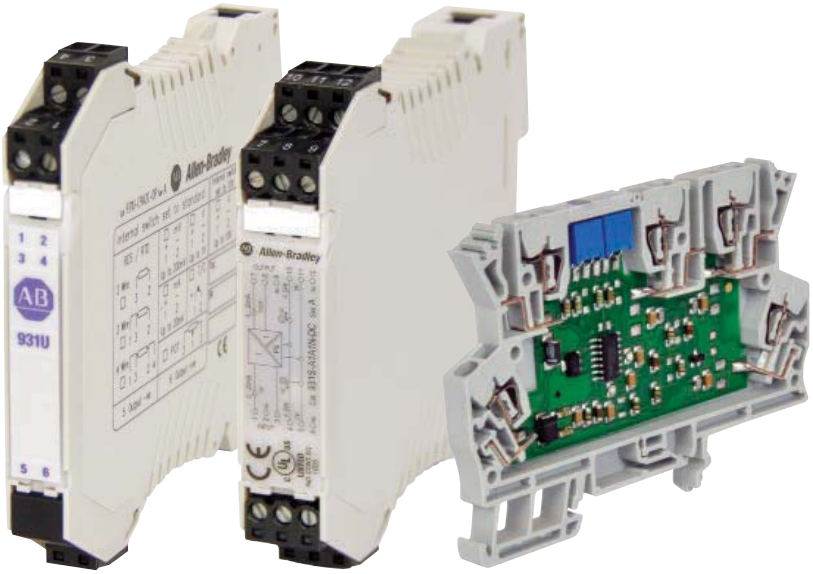

Rockwell Automation is pleased to introduce the Allen-Bradley® Bulletin 931 Analog Signal Conditioner product line. This new offering provides a wide range of products for use wherever temperature, pressure, speed, weight, level, and flow are measured and controlled as part of a continuous or batch production process.

Your facility or working environment needs to operate in a specific manner to reach maximum efficiency and profitability. The Bulletin 931 Analog Signal Conditioners are designed to help you convert, isolate and amplify signals in your applications and can isolate between multiple field measurement devices on a common power supply to help prevent interference that can occur due to ground loops or common mode noise.

In addition, these DIN rail-mounted analog signal conditioners are compatible with all types of integrated PLC and DCS I/O systems and can be integrated with our PlantPAx™ Process Automation System to leverage a single control platform for batch, drives, motion control, process and safety.

Catalog Number	Description	Width (mm)	Input Ratings	Output Ratings	Power
Current/Voltage					
931H-A1A1N-IP	Passive Isolator, 1 Channel	6.0	0(4)...20 mA	0(4)...20 mA	ILP[4]
931H-A2A2N-DC	Active Isolator, 3 Way,	6.1	4...20 mA	4...20 mA	AUX
931H-C2C2D-DC	Active Converter, 3 Way	6.1	0...20 mA, 4…20mA, 0…10 VDC	0...20 mA, 4…20mA, 0…10 VDC	AUX
931S-A1A1N-DC	Active Converter, 3 Way	17.5	0(4)...20 mA	0(4)...20 mA	AUX
931S-A1A1N-IP1	Passive Isolator, 1 Channel	17.5	0(4)...20 mA	0(4)...20 mA	ILP[4]
931S-A1A1N-IP2	Passive Isolator, 2 Channel	17.5	0(4)...20 mA	0(4)...20 mA	ILP[4]
931S-A2A2N-DC	Active Isolator	12.5	4...20 mA	4...20 mA	AUX
931S-A2A5N-OP	Passive Isolator, Splitter	17.5	4...20 mA	(2x) 4...20 mA	OLP[5]
931S-C1A2D-OP	Passive Converter	17.5	0...20 mA, 4…20mA, 0…5 VDC, 0…10 VDC	4...20 mA	OLP[5]
931S-C3C3J-DC	Active Converter, 3 Way,	12.5	0...22mA[3], 0…10 VDC[3]	0…22mA[3], 0...10 VDC[3]	AUX
931S-C4C5D-BC	Active Converter, 3 Way	12.5	±0.1mA…±100mA[3], ±20mV…±200VDC[3]	0...±20 mA, 0…+10 VDC	AUX[1]
Temperature - RTD					
931H-P2C1D-DC	Active Converter, PT100/RTD	6.1	PT100, 2 or 3 conds (0…100°C)	0...20 mA, 4…20mA, 0…5 VDC, 0…10 VDC	AUX
931H-P2A2N-OP	Active Converter, PT100/RTD	6.0	PT100, 2 or 3 conds (0...200°C)	4...20 mA	OLP[5]
931S-P1C2D-DC	Active Converter, 3 Way, RTD	17.5	Pt100, Ni100 2, 3 or 4 conds; Pot.: 0...100kΩ; Res.: 0...4.5kΩ	0...20 mA, 4…20mA, 0…10 VDC	AUX
Temperature - Thermocouple					
931H-T1C1D-DC	Thermocouple, Type J	6.1	Type J (0…700°C)	0...20 mA, 4…20mA, 0…5 VDC, 0…10 VDC	AUX
931H-T2C1D-DC	Thermocouple, Type K	6.1	Type K, (0…1000°C)	0...20 mA, 4…20mA, 0…5 VDC, 0…10 VDC	AUX
931S-T9C2D-DC	Universal Thermocouple, 3 Way	17.5	Type K, J, T, E, N, R, S, B (-200…+1820°C)	0...20 mA, 4…20mA, 0…10 VDC	AUX
Line Monitoring					
931S-A3A2D-OP	Passive Converter, Monitoring	22.5	0…1A or 0…5A or 0…10A (AC)	4...20 mA	OLP[5]
931S-A3C2D-DC	Active Converter, Monitoring	22.5	0…1A or 0…5A or 0…10A (AC)	0...20 mA, 4…20mA, 0…10 VDC	AUX
931S-A4C2D DCHall	Active Isolator, Hall-Effect Monitoring	22.5	0…20A or 0…25A or 0…30A (AC/DC)	0...20 mA, 4…20mA, 0…10 VDC	AUX
931S-C2R1D-DC2R	Isolator, 3 Way, Limit Value Monitoring	17.5	0...20 mA, 4…20mA, 0…10 VDC	2 Relays	AUX
931S-V1R1D-MC1R	Isolator, 3 Way, Monitoring	17.5	24…70 / 70…140 / 140…210 / 210…260 V (AC/DC)	1 Relay	ILP[4]
Application Specific					
931S-B1C6D-DC	Bridge Converter, 3 Way	17.5	-500 mV...+500 mV (Excitation = +10 VDC, +5 VDC or 4.8...10.2 VDC adjustable)	0...20mA, 4…20mA, 20…0mA, 20…4mA, 0…5VDC, 0….10VDC, 5…0 VDC, 10…0 VDC	AUX
931S-F1C2D-DC	Frequency Converter, 3 Way	12.5	2 or 3 wire PNP/NPN, NAMUR initiator, push-pull step	0...20 mA, 4…20mA, 0…10 VDC	AUX
931H-A2C2D-DCHart	Active Isolator, 3 Way, Hart	6.1	4...20 mA (HART)	0...20 mA, 4…20mA, 0…10 VDC (HART)	AUX
Universal					
931U-C9A2C-OP[6]	Active Converter, Universal	12.5	Current/Voltage: -10…20mA; -5…10Vdc / -10…20mA; -5…10V / -100…200mV; TC: B, C, E, J, K, L, N, R, S, T, W3, W5 (-200…+2300°C); RTD: Pt100/200, Ni100, Cu100 2/3/4 cond. (-200…+850°C)	4...20 mA	OLP[5]
U-C9C7C-BC[6]	Active Converter, 3 Way, Universal	45.0	Current/Voltage: -20…50mA; -200…500mV , -20…50 VDC; TC: B, E, J, K, L, N, R, S, T; RTD: PT100, PT1000, Ni100, Ni1000, Cu10, Cu25, Cu50, Cu100 2/3/4 cond; Pot: 100Ω…100kΩ; Res.: 10Ω…5kΩ Freq.: 2Hz…100kHz	0…20mA, -10…10 VDC (programmable); 2 Relays	AUX[2]
931U-CABLE	Programming Cable	NA	NA	NA	NA
Accessories					
931H-EB1	End Barrier	1.5	NA	NA	NA

BOM #15

*All non-marked AUX are 24VDC

[1] 22…230V AC/DC
[2] 18…264V AC/DC
[3] These ranges are scalable
[4] Input Loop Powered
[5] Output Loop Powered
[6] Software Programmable

Rockwell Automation offers a breadth of quality Allen-Bradley® components to fit your specific needs. In order to assist you with your component selection, we offer a variety of configuration and selection tools.

Local Distributor
Call 1.800.223.3354 to contact your local Distributor today.
http://www.rockwellautomation.com/distributor/

On-Line Product Directory
Our extensive product portfolio is designed to improve your processes through every stage of your manufacturing cycle.
http://www.rockwellautomation.com/products/

Product Selection Toolbox
Our powerful range of product selection and system configuration tools assist you in choosing and applying our products.
http://www.rockwellautomation.com/en/e-tools/

Catalogs
Within our catalogs you'll find an extensive selection of essential Allen-Bradley component products.
http://www.ab.com/catalogs/

Allen-Bradley, LISTEN. THINK. SOLVE., and PlantPAx are trademarks of Rockwell Automation, Inc. Trademarks not belonging to Rockwell Automation are property of their respective companies.

www.rockwellautomation.com

Power, Control and Information Solutions Headquarters

Americas: Rockwell Automation, 1201 South Second Street, Milwaukee, WI 53204-2496 USA, Tel: (1) 414.382.2000, Fax: (1) 414.382.4444
Europe/Middle East/Africa: Rockwell Automation NV, Pegasus Park, De Kleetlaan 12a, 1831 Diegem, Belgium, Tel: (32) 2 663 0600, Fax: (32) 2 663 0640
Asia Pacific: Rockwell Automation, Level 14, Core F, Cyberport 3, 100 Cyberport Road, Hong Kong, Tel: (852) 2887 4788, Fax: (852) 2508 1846

Publication 931-PP001C-EN-P – August 2012
Supersedes Publication 931-PP001B-EN-P – January 2010

Copyright © 2012 Rockwell Automation, Inc. All Rights Reserved. Printed in USA.

BOM #16

Spring-Clamp Connection Terminal Blocks

Plug-in Style Blocks (Cat. Nos. 1492-L3P, -LDG3P) and Analog Loop Control Block (Cat. No. 1492-LDAG3)

	1492-L3P			1492-LDG3P			1492-LDAG3		
Dimensions are not intended to be used for manufacturing purposes. **Note:** Height dimension is measured from top of rail to top of terminal block.	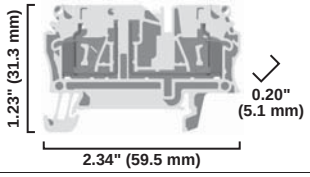			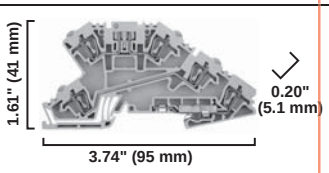					
Specifications	*Single Circuit Plug-In Component Block for a Variety of Components*			*Terminal Block with slot for Plug-In Component, Feed-Through Circuit and 1 Ground Connection*			*Analog Loop Control Terminal Block with 2 Feed-Through Circuits and 1 Ground Connection*		
Certifications	UL	CSA	IEC	UL	CSA	IEC	UL	CSA	IEC
Voltage Rating	600V AC/DC		500V AC/DC	300V AC/DC		250V AC/DC	300V AC/DC		250V AC/DC
Maximum Current	20 A		24 A	10 A		20 A	10 A		24 A
Wire Range (Rated Cross Section)	#30…12 AWG		4 mm²	#26…12 AWG		2.5 mm²	#26…12 AWG		2.5 mm²
Wire Strip Length	0.39 in. (10 mm)			0.31 in. (8 mm)			0.31 in. (8 mm)		
Density	59 pcs/f (/196 pcs/m)			59 pcs/ft (196 pcs/m)			59 pcs/ft (196 pcs/m)		
Housing Temperature Range	–58…+248 °F (–50…+120 °C)			–58…+248 °F (–50…+120 °C)			–58…+248 °F (–50…+120 °C)		
Terminal Blocks	**Cat. No.**		**Pkg Qty.**	**Cat. No.**		**Pkg Qty.**	**Cat. No.**		**Pkg Qty.**
Color Grey	**1492-L3P**		25			25	**1492-LDAG3**		25
Accessories	**Cat. No.**		**Pkg Qty.**	**Cat. No.**		**Pkg Qty.**	**Cat. No.**		**Pkg Qty.**
Mounting Rails 1 m Symmetrical DIN (Steel)	**199-DR1**		10	**199-DR1**		10	**199-DR1**		10
1 m Symmetrical DIN (Aluminum)	**1492-DR5**		10			10	**1492-DR5**		10
1 m Hi-Rise Symmetrical DIN (Aluminum)	**1492-DR6**		2	**1492-DR6**		2	**1492-DR6**		2
1 m Angled Hi-Rise Sym. DIN (Steel)	**1492-DR7**		2	**1492-DR7**		2	**1492-DR7**		2
End Barrier	**1492-EBL3**		50	**1492-EBLDAG3**		20	**1492-EBLDAG3**		20
End Anchors and Retainers Screwless End Retainer	**1492-ERL35**		20	**1492-ERL35**		20	**1492-ERL35**		20
DIN Rail — Normal Duty	**1492-EAJ35**		100	**1492-EAJ35**		100	**1492-EAJ35**		100
DIN Rail — Heavy Duty	**1492-EAHJ35**		50	**1492-EAHJ35**		50	**1492-EAHJ35**		50
Jumpers Plug-In Center Jumper — 50-pole	**1492-CJK5-50**		10	**1492-CJLJ5-50**		10	**1492-CJLJ5-50**		10
Plug-In Center Jumper — 10-pole	**1492-CJK5-10**		20	**1492-CJLJ5-10**		20	**1492-CJLJ5-10**		20
Plug-In Center Jumper — 9-pole	**1492-CJK5-9**		20	**1492-CJLJ5-9**		20	**1492-CJLJ5-9**		20
Plug-In Center Jumper — 8-pole	**1492-CJK5-8**		20	**1492-CJLJ5-8**		20	**1492-CJLJ5-8**		20
Plug-In Center Jumper — 7-pole	**1492-CJK5-7**		20	**1492-CJLJ5-7**		20	**1492-CJLJ5-7**		20
Plug-In Center Jumper — 6-pole	**1492-CJK5-6**		20	**1492-CJLJ5-6**		20	**1492-CJLJ5-6**		20
Plug-In Center Jumper — 5-pole	**1492-CJK5-5**		20	**1492-CJLJ5-5**		20	**1492-CJLJ5-5**		20
Plug-In Center Jumper — 4-pole	**1492-CJK5-4**		60	**1492-CJLJ5-4**		60	**1492-CJLJ5-4**		60
Plug-In Center Jumper — 3-pole	**1492-CJK5-3**		60	**1492-CJLJ5-3**		60	**1492-CJLJ5-3**		60
Plug-In Center Jumper — 2-pole	**1492-CJK5-2**		60	**1492-CJLJ5-2**		60	**1492-CJLJ5-2**		60
Other Accessories Disconnect Plug	**1492-DPL**		50	**1492-DPL**		50	—		—
Component Plug	**1492-CPL**		50	**1492-CPL**		50	—		—
Fuse Plug Without Blown Fuse Indicator	**1492-FPK2**		20	**1492-FPK2**		20	—		—
10…36V Blown Fuse Indicator	**1492-FPK224**		20	**1492-FPK224**		20	—		—
35…70V Blown Fuse Indicator	**1492-FPK248**		20	**1492-FPK248**		20	—		—
60…150V Blown Fuse Indicator	**1492-FPK2120**		20	**1492-FPK2120**		20	—		—
140…250V Blown Fuse Indicator	**1492-FPK2250**		20	**1492-FPK2250**		20	—		—
Reducing Sleeves 28…24 AWG (0.13…0.2 mm²) White	1492-PSL3-2		100	—		—	—		—
Reducing Sleeves 22…20 AWG (0.25…0.5 mm²) Grey	**1492-PSL3-5**		100	—		—	—		—
Reducing Sleeves 18 AWG (0.75…1.0 mm²) Dark Grey	**1492-PSL3-10**		100	—		—	—		—
Test Plug	**1492-TPL5**		25	**1492-TP23**		20	—		—
Electrical Warning Plate	**1492-EWPL5**		20	—		—	—		—
Group Marking Carrier	**1492-GM35**		25	**1492-GM35**		25	**1492-GM35**		25
Marking Systems Snap-In Marker Cards	**1492-M5X10** (144/card)		5	**1492-M5X10** (144/card)		5	**1492-M5X10** (144/card)		5
Snap-In Marker Cards	**1492-M5X5** (200/card)		5	**1492-M5X5** (200/card)		5	**1492-M5X5** (200/card)		5

BOM #18

BOM #17

ELECTRIC HEATERS

BOM #19

115/230 Volt
100/200 Watt

115/230 Volt
400/800 Watt

115/230 Volt
1300 Watt

INDUSTRY STANDARDS

UL 508A Component Recognized; File No. E61997

CSA Certified, CSA File No. LR42186
CE

APPLICATION

Protect mechanical, electrical and electronic equipment from low temperatures, condensation and corrosion with this thermostatically controlled, fan-driven heater that maintains a stable enclosure temperature.
Fan draws cool air from the bottom of the enclosure and passes this air across the thermostat and heating element before being released into enclosure cavity. Heated air is discharged through the top of the heater unit.

SPECIFICATIONS

- Aluminum housing
- Thermostat range adjustable from 0 F to 100 F (-18 C to 38 C)
- Four 10-32 x self-tapping screws are included with each heater
- Ball bearing fan
- Terminal strip with clamp connector that accepts both solid and stranded wire

FINISH

- Brushed aluminum

⚠ CAUTION

These electric heaters are not designed for use in dusty, dirty, corrosive, or hazardous locations. Portions of the heater can get hot. Adequate protection must be taken to protect people from potential burns, and to protect other components from this heat. Pentair Technical Products recommends this heater only be installed in a totally-enclosed metal enclosure.

DO NOT INSTALL HEATERS ON WOOD PANELS.
Heat sensitive components should not be placed near the heater discharge area since this air can be quite warm. The clearance range defines the space that must be kept free of these components for proper and safe operation of the heater.

Performance Data **100 and 200 Watt Heaters**

CATALOG NUMBERS	DAH1001A	DAH1002A	DAH2001A	DAH2002A
ELECTRICAL DATA				
Rated Voltage	**115**	**230**	**115**	**230**
Frequency (Hz)	50/60	50/60	50/60	50/60
Power Consumption (Watts)	100	100	200	200
Nominal Current (Amps)	0.98	0.49	1.89	0.95
HEATING PERFORMANCE				
Watts	**100**	**100**	**200**	**200**
UNIT CONSTRUCTION				
Weight (lb./kg)	1.6/0.73	1.6/0.73	1.6/0.73	1.6/0.73
X (in./mm)	4.00/102	4.00/102	6.00/152	6.00/152

Performance Data **400 and 800 Watt Heaters**

CATALOG NUMBERS	DAH4001B	DAH4002B	DAH8001B	DAH8002B
ELECTRICAL DATA				
Rated Voltage	**115**	**230**	**115**	**230**
Frequency (Hz)	50/60	50/60	50/60	50/60
Power Consumption (Watts)	400	400	800	800
Nominal Current (Amps)	3.72	1.86	7.37	3.69
HEATING PERFORMANCE				
Watts	**400**	**400**	**800**	**800**
UNIT CONSTRUCTION				
Weight (lb./kg)	2.2/1.00	2.2/1.00	2.2/1.00	2.2/1.00
X (in./mm)	6.00/152	6.00/152	8.00/203	8.00/203

Performance Data **1300 Watt Heaters**

CATALOG NUMBERS	DAH13001C	DAH13002C
ELECTRICAL DATA		
Rated Voltage	**115**	**230**
Frequency (Hz)	50/60	50/60
Power Consumption (Watts)	1300	1300
Nominal Current (Amps)	11.5	5.7
HEATING PERFORMANCE		
Watts	**1300**	**1300**
UNIT CONSTRUCTION		
Weight (lb./kg)	3.4/1.54	3.4/1.54
X (in./mm)	8.00/203	8.00/203

Dimensions and Clearance Range Drawing for DAH1001A, -2A and DAH2001A, -2A

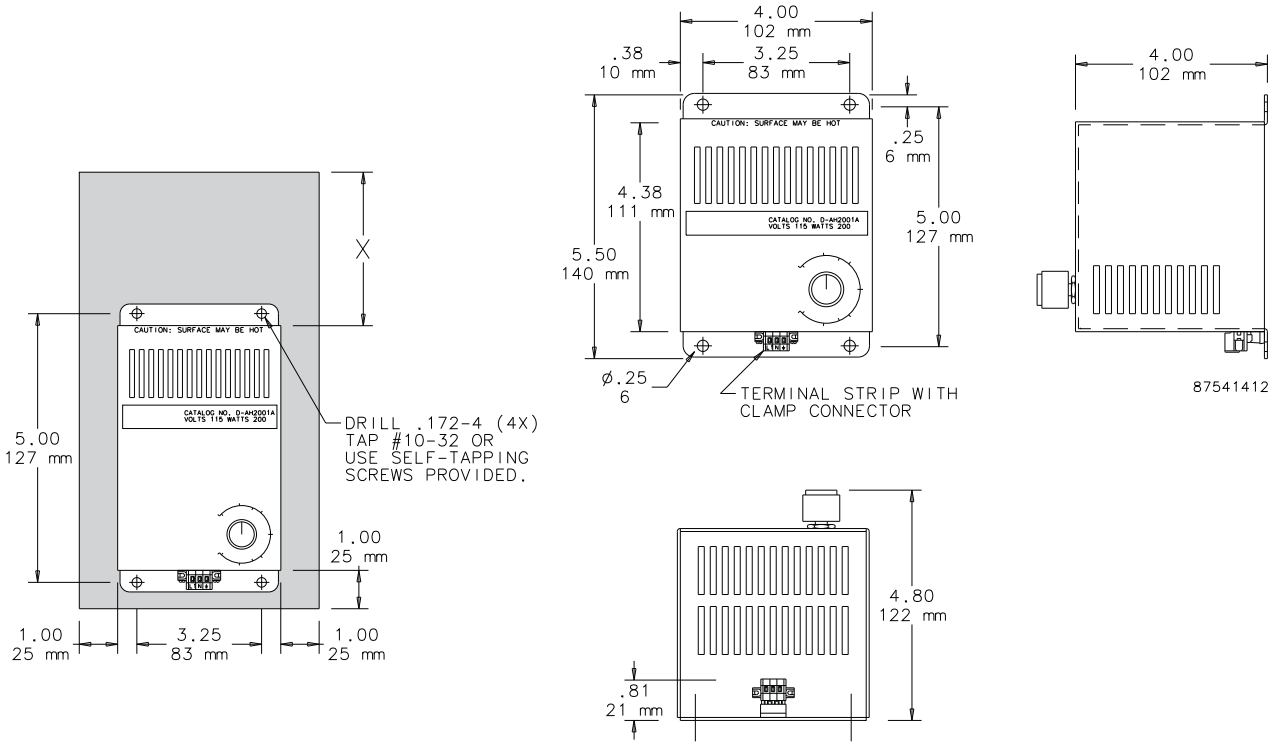

Dimensions and Clearance Range Drawing for DAH4001B, -2B and DAH8001B, -2B

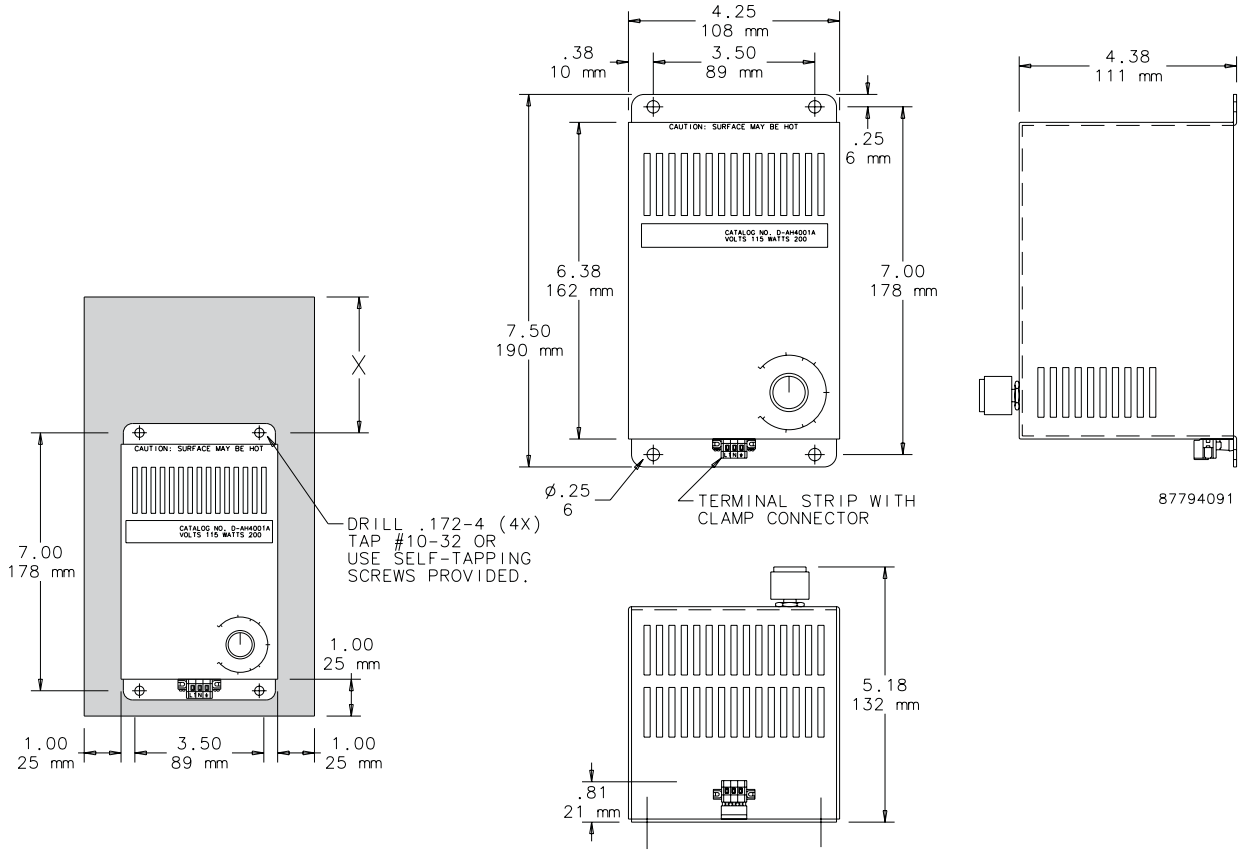

Dimensions and Clearance Range Drawing for DAH13001C and DAH13002C

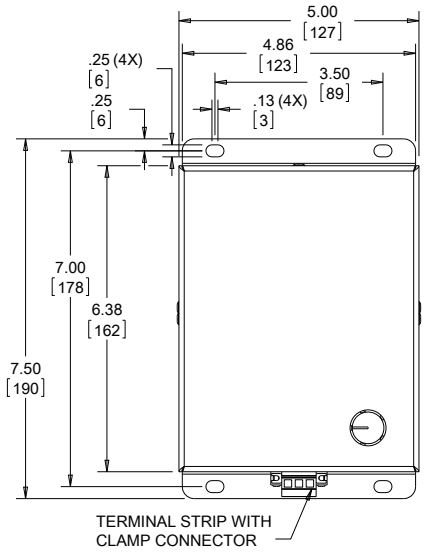

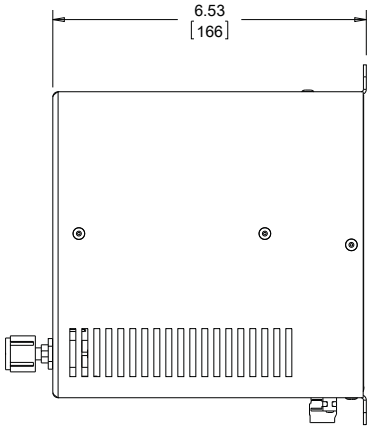

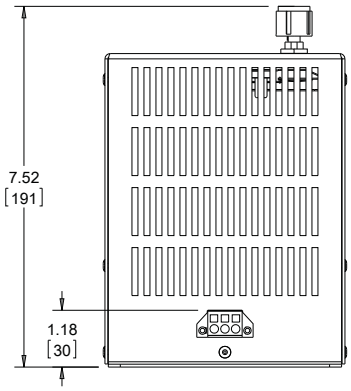

89091692

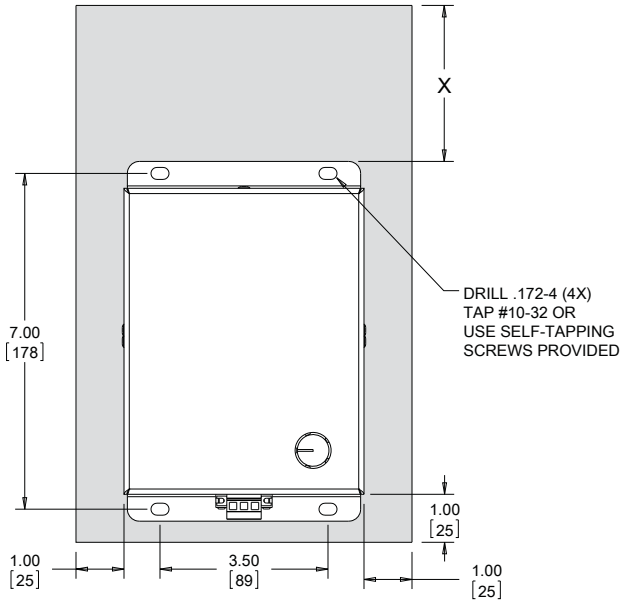

BOM #20

Product: 1492-GS1G200

Description: 1492-GS High Density Mini Circuit Breakers (Toggle Style)

Representative Photo Only (actual product may vary based on configuration selections)

MINIATURE CIRCUIT BREAKER DATA	
Electrical Standards	UL
Number of Poles	1 pole
Magnetic Trip Range	G-Trip Characteristics - Inductive Loads (AC)
Amp Rating	20.0 A
Optional Auxiliary Contact	No Contact

CERTIFICATIONS AND APPROVALS	
UL	1077, Guide No. QVNU2, File No. E65138
CSA	22.2 NO. 235
EN	60934
CE	Marked
For UL Certifications Directory:	http://database.ul.com/cgi-bin/XYV/template/LISEXT/1FRAME/index.htm

Specifications ❶

Cat. No.	1492-GS
Description	High-density circuit breaker (supplementary protector) with universal mounting foot for Allen-Bradley and DIN rail mounting
Maximum Voltage Ratings	277/480V AC 50/60 Hz 65V DC
Standard Current Ratings Internal Resistance per Pole	A 0.2 0.5 0.8 1.0 1.5 2.0 2.5 3.0 4.0 5.0 6.0 8.0 10.0 12.0 15.0 16.0 20.0 25.0 Ω 26 4.2 1.6 1.1 0.47 0.25 0.20 0.13 0.08 0.06 0.05 0.01 0.01 0.01 0.01 0.01 0.005 0.004
Dielectric Strength	1960V AC
Shock and Vibration Specifications	Shock: 25 G, 11 ms duration Vibration: 5 G (10…500 Hz)
Insulation Resistance	Greater than 100 MΩ @ 500V DC
Current Capacity of Auxiliary Contacts (N.O., N.C.)	1.0 A AC or DC (resistive load)
Voltage Rating of Auxiliary Contacts	277V AC 65V DC
Operating Life	6000 cycles @ rated current (UL 1077)
Temperature Range	–40…+149°F (–40…+65°C)
Wire Size	#22…#10 AWG (0.5…6 mm^2)
Recommended Wire Strip Length	0.51" (13.0 mm) for Mail Terminals 0.41" (10.4 mm) for Auxiliary Terminals
Recommended Tightening Torque	5 lb-in. (0.565 Nm)

❶ Performance Data — See page Important-2.

Approvals

- UL 1077
- CSA 22.2 NO. 235
- VDE 0631 (IEC 60934)

In North America, the Cat. No. 1492-GS circuit breaker is rated as a Supplementary Protector with a short-circuit current rating. Internationally, it is rated by IEC as a Circuit Breaker for Equipment with an interrupt rating

Electrical Characteristics

Poles	Rated Current (A)	Voltage Rating		Short-Circuit Current Rating ❶ Interrupt Rating *I*cn (IEC only)
		AC	DC	
UL 1077 Supplementary Protector Rating				
1	0.2…5	277	—	0.4 kA, U2
1	6…25	277	—	0.7 kA, U2
2, 3	0.2…5	277/480	—	0.4 kA, U2
2, 3	6…25	277/480	—	0.5 kA, U2
1, 2, 3	0.2…5	—	65	0.4 kA, U2
1, 2, 3	6…25	—	65	0.8 kA, U2
1	0.2…16	277	—	5 kA, C1
1	18…25	277	—	2 kA, C1
2, 3	0.2…16	277/480	—	5 kA, C1
2, 3	18…25	277/480	—	2 kA, C1
1	0.2…25	—	65	2 kA, C1
CSA 22.2 #235 Supplementary Protector Ratings				
1	0.2…16	277	—	5 kA, C1
1	18…25	277	—	2 kA, C1
2, 3	0.2…16	277/480	—	5 kA, C1
2, 3	18…25	277/480	—	2 kA, C1
1	0.2…25	—	65	2 kA, C1
IEC 60934 Circuit Breaker for Equipment Ratings				
1	0.2…5	250	—	0.4 kA
1	6…25	250	—	0.8 kA
2, 3	0.2…5	240/415	—	0.4 kA
2, 3	6…25	240/415	—	0.8 kA
1	0.2…5	—	65	0.4 kA
1	6…25	—	65	0.8 kA

❶ The short-circuit current rating is followed by a letter and number designating the test conditions and any calibrations and dielectric tests following the short-circuit test. These designations are defined as follows (see ❷ also):
C — Indicates that the short-circuit test was conducted with series overcurrent protection
U — Indicates that the short-circuit test was conducted without series overcurrent protection
1 — Indicates that a recalibration and dielectric test was not conducted as part of the short-circuit test
2 — Indicates that a recalibration and dielectric test was conducted as part of the short-circuit test

❷ These alphanumeric designations were established by UL. CSA has not yet adopted them; however, the test conditions are equivalent to UL and the coding is appropriate.

BOM #20

COOPER Bussmann

Compact Modular Fuse Holders

COOPER Bussmann

DIN-Rail Mount Fuse Holders Protect Your Electrical System and Simplify Installation

- Colour coded for simple visual identification: yellow for **PV (1000Vdc)**, red for **IEC (690Vac)** and **black** for **UL (600Vac/dc)** applications.
- CHPV Models, with 1000Vdc rating for use with solar gPV fuse links, are suitable for photovoltaic applications of any size.
- Tested to a wide range of standards: IEC, cULus, CCC, CSA and UR, allowing for use across global applications.
- World class space-saving footprint - smaller than any other Modular Fuse Holder, reducing required installation space.
- Toolless DIN-Rail mounting improves ease of use and reduces installation time and costs.
- Rated for use with 75ºC or 90ºC wire, fine stranded wire, spade terminals and with comb-bus bars. Use any higher temperature rated wire with appropriate derating.

For more information visit www.cooperbussmann.com/ModularFuseHolders

Modular Fuse Holder Selection Table (10 x 38, Photovoltaic and Class CC)

Series & Size	Catalogue Number		Rated Voltage & Rated Current	Agency Markings	Number of Poles	Terminal Rating	Rated Breaking Capactiy	Cooper Bussmann Fuse Links
	With Indicator	Without Indicator						
CHM 10x38 and Midget	CHM1DIU	CHM1DU	IEC 690Vac/32A UL 600Vac/30A;	IEC 60269-2 UR; CSA; CCC	1	IEC: 1 to 25mm² 70°C PVC/Copper Cable Solid, Stranded, Fine Stranded, Spade Lug, Comb Bus Bar; Single and Dual	IEC 120kA rms sym UL 200kA rms sym CCC 100kA rms sym	IEC: C10 Series UL: FNQ, KLM, FNM, KTK, BAF, FWA, PVM, AGU, BAN, FWC.
	CHM2DIU	CHM2DU			2			
	CHM3DIU	CHM3DU			3			
	CHM4DIU	CHM4DU			4			
	CHM1DNIU	CHM1DNU		IEC 60269-2	1-pole + 1 neutral			
	CHM3DNIU	CHM3DNU			3-pole + 1 neutral			
	CHM1DI-48U	N/A	IEC 48Vdc/32A UL 48Vdc/30A;	IEC 60269-2; UR; CSA; CCC	1			
	N/A	CHM1DNXU	IEC 690Vac/32A	IEC 60269-2	1 neutral		N/A	N/A
CHPV Photovoltaic	CHPV1IU	CHPV1U	IEC 1000Vdc/32A UL 1000Vdc/30A;	IEC 60269-1 UR; CSA; CCC UL4248-18	1		33kA	Solar PV series, PVM, PV-xxA10F
	CHPV2IU	CHPV2U			2			
CHCC Class CC	CHCC1DIU	CHCC1DU	UL 600Vac/dc 30A	UL; CSA; CCC	1	Cable 75°C and 90°C Cu cable	200kA rms sym	LP-CC, FNQ-R, KTK-R
	CHCC2DIU	CHCC2DU			2			
	CHCC3DIU	CHCC3DU			3			
	N/A	CHCC1DI-48U	UL 48Vdc/30A		1			

Features

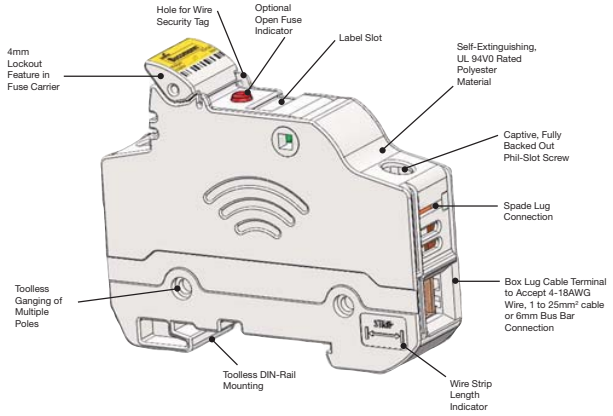

Specifications

Temperature Operating Range:
- -20°C to +120°C (non-indicating)
- -20°C to +90°C (indicating)

Flammability: Self-extinguishable UL 94V0 rated

Comb Bus Bar & Power Feed Accessories Make Installation Easier

- Distributes power in single- or three-phase configurations
- Cut-to-length solution does not compromise finger-safe protection
- Single-phase bus bars rated to 1000Vdc and 100A in end-fed configuration (200A for center-fed configuration)
- Three-phase bus bars rated to 600Vac/dc and 100A in end-fed configuration (200A for center-fed configuration)
- Power feed terminals for single-phase and three-phase service

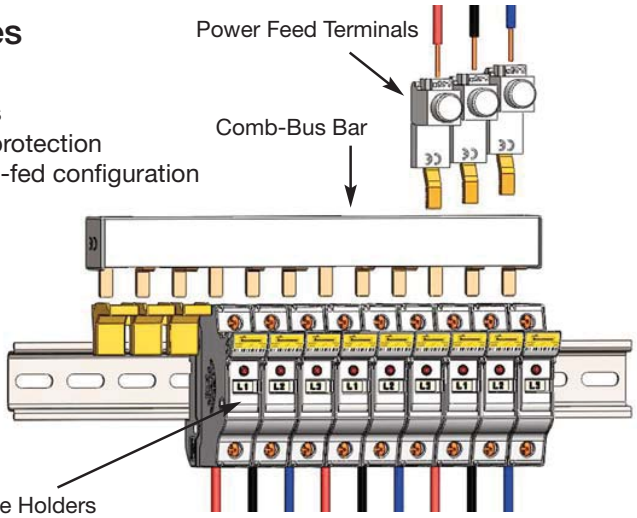

© 2012 Cooper Bussmann
www.cooperbussmann.com

COOPER Bussmann

Transient Voltage Surge Suppression Limiters TVSS

Time-Current Characteristic Curves–Average Melt

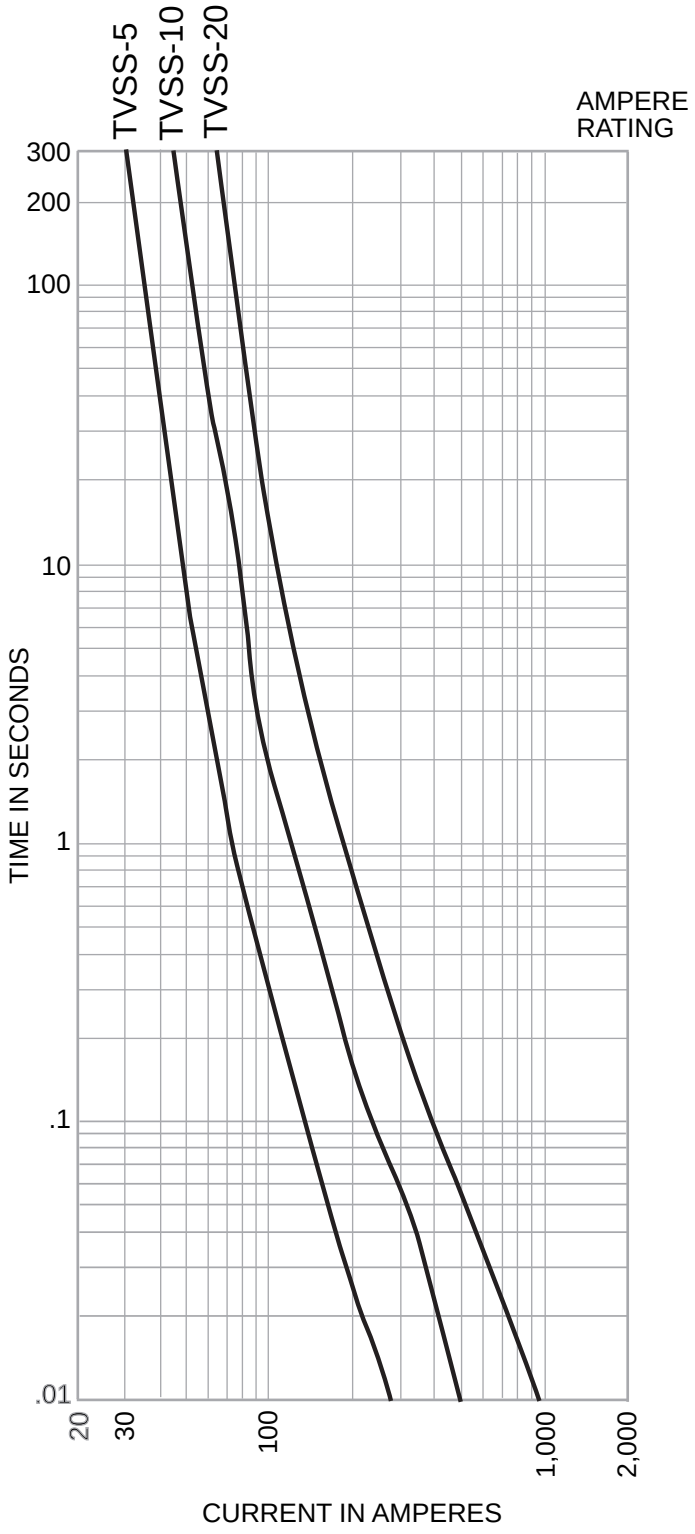

Time-Current Characteristic Curves–Peak Let-Through

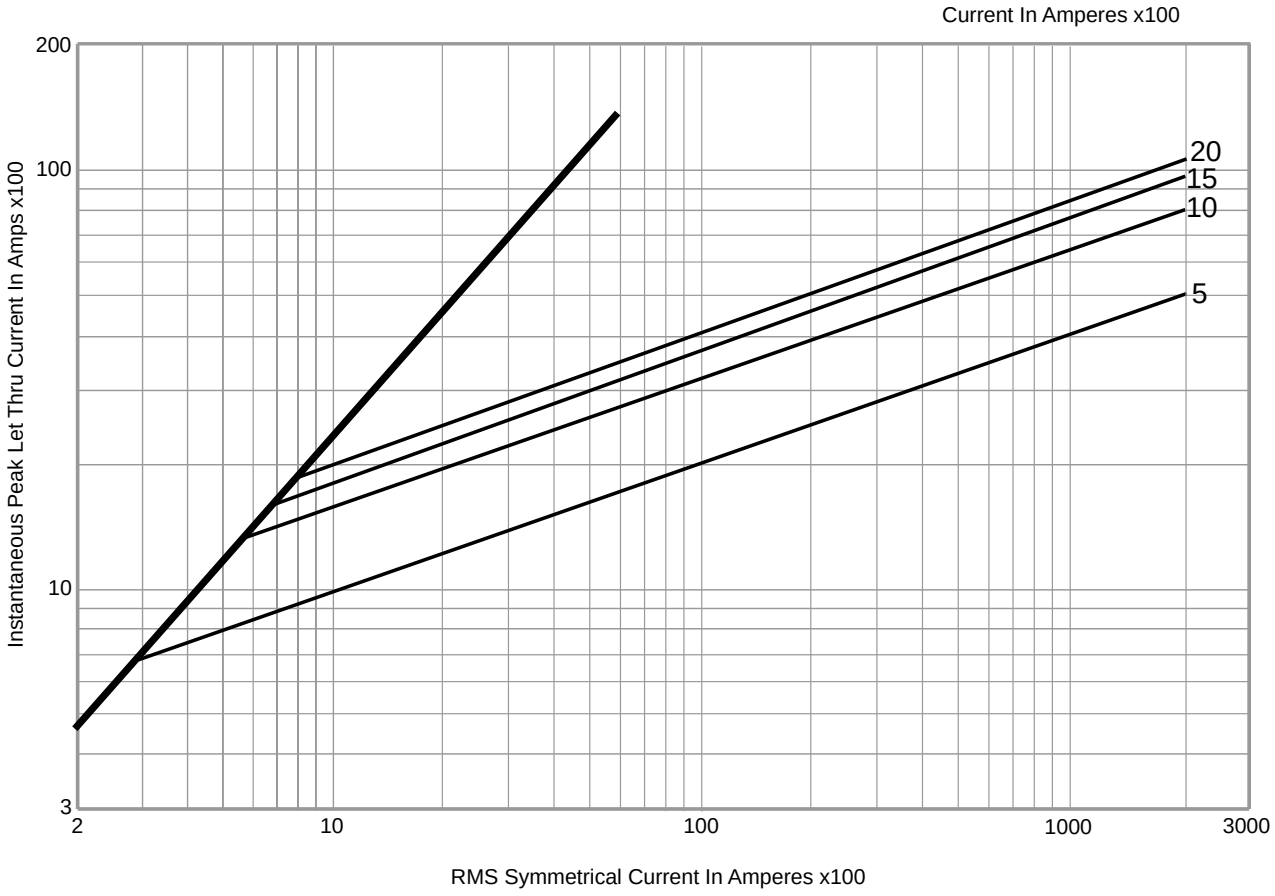

The only controlled copy of this Data Sheet is the electronic read-only version located on the Bussmann Network Drive. All other copies of this document are by definition uncontrolled. This bulletin is intended to clearly present comprehensive product data and provide technical information that will help the end user with design applications. Bussmann reserves the right, without notice, to change design or construction of any products and to discontinue or limit distribution of any products. Bussmann also reserves the right to change or update, without notice, any technical information contained in this bulletin. Once a product has been selected, it should be tested by the user in all possible applications.

Transient Voltage Surge Suppression Limiters TVSS

Time-Current Characteristic Curves–Average Melt

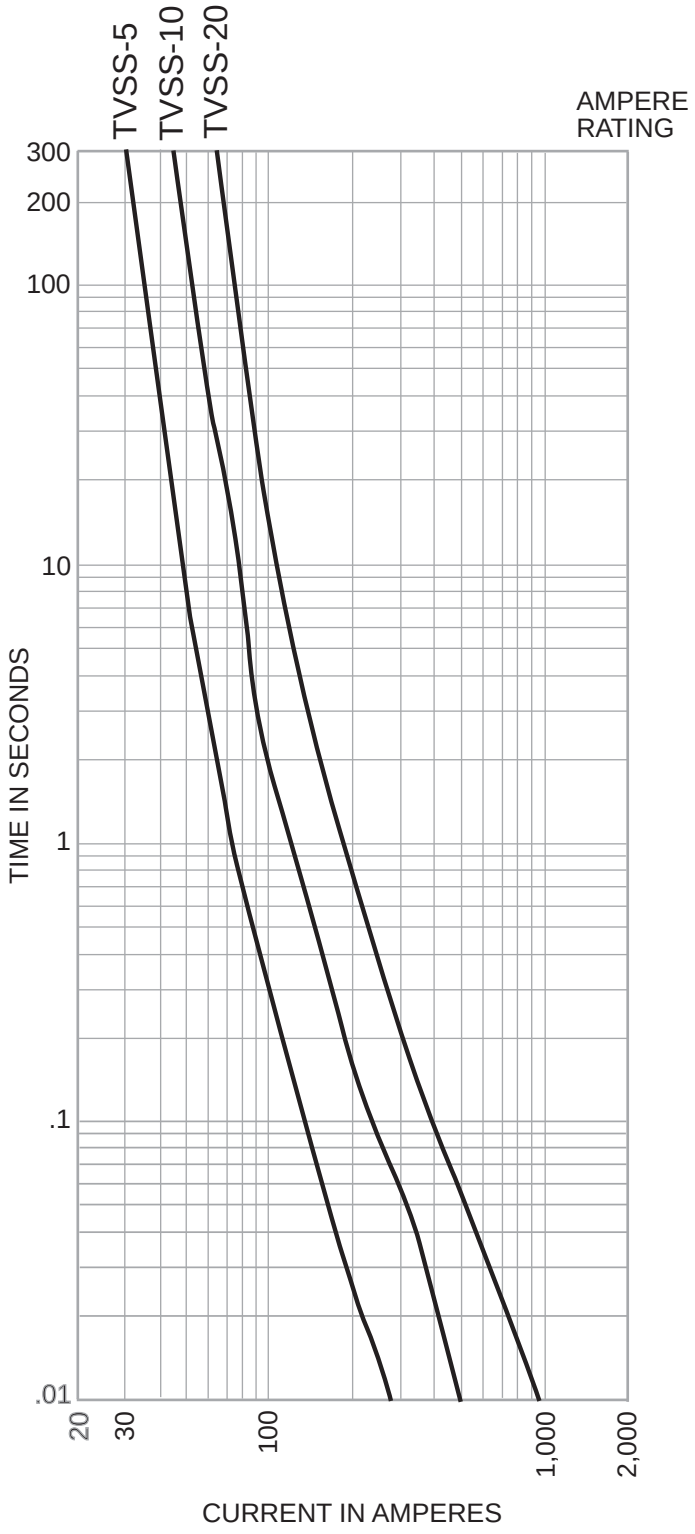

Time-Current Characteristic Curves–Peak Let-Through

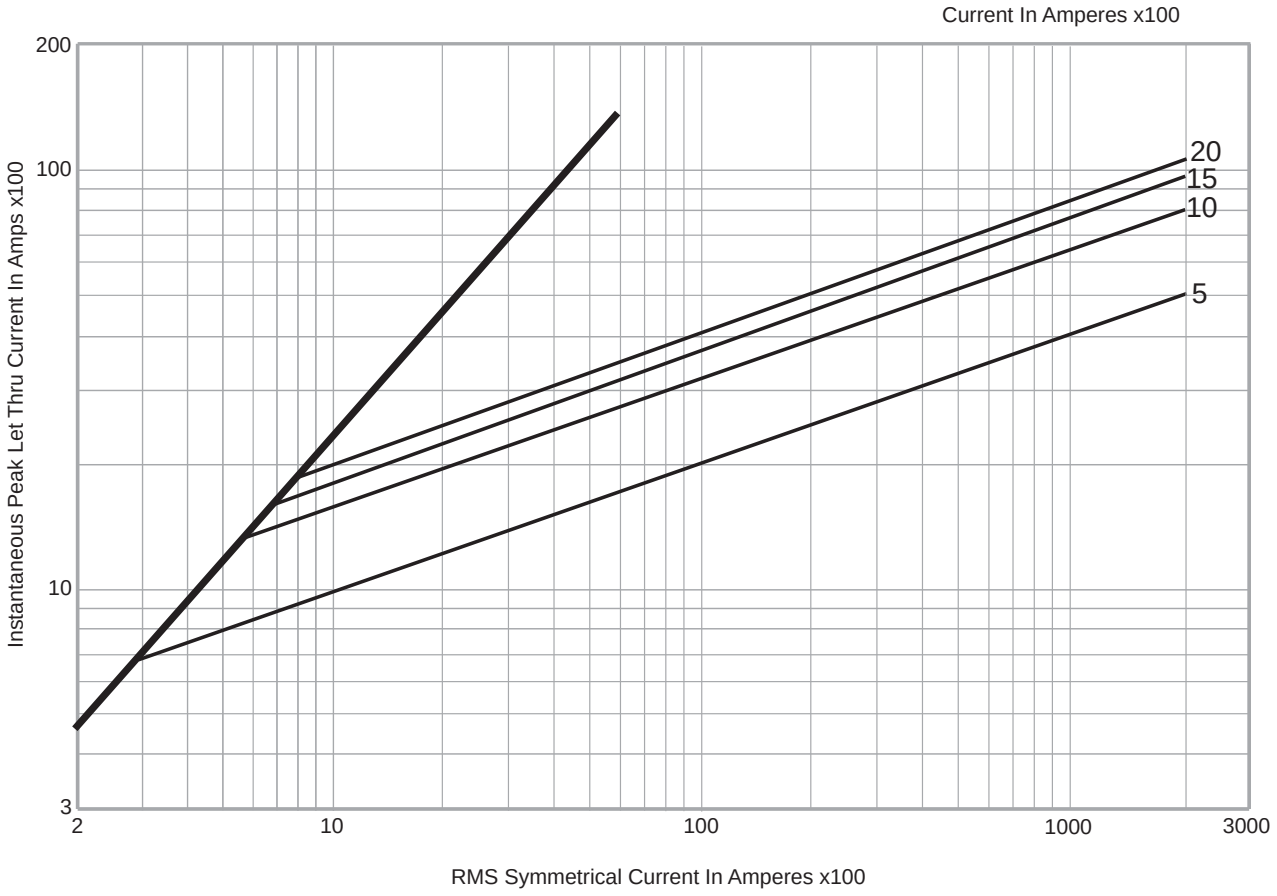

The only controlled copy of this Data Sheet is the electronic read-only version located on the Bussmann Network Drive. All other copies of this document are by definition uncontrolled. This bulletin is intended to clearly present comprehensive product data and provide technical information that will help the end user with design applications. Bussmann reserves the right, without notice, to change design or construction of any products and to discontinue or limit distribution of any products. Bussmann also reserves the right to change or update, without notice, any technical information contained in this bulletin. Once a product has been selected, it should be tested by the user in all possible applications.

DIN-Rail TVS Series

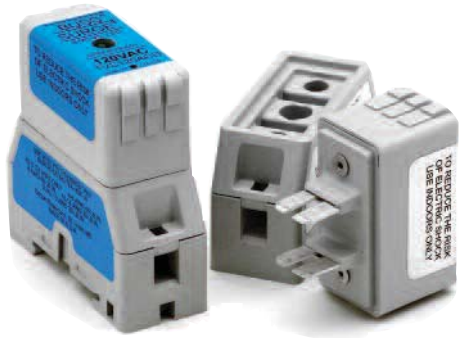

Status LED

OFF - Suppressor Non-Operational (power may be on)
GREEN - Suppressor Operational (power on)

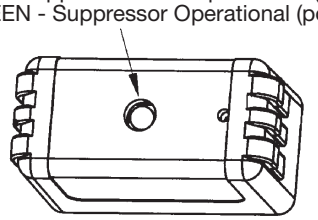

Specifications

Description: DIN-Rail mount voltage surge protection system for AC or DC voltage using diode or MOV technology.

Construction:

Suppressor: Case: 20% glass filled PES (Polyethersulfone)
Terminals: 110 Copper
Terminal Plating: Electroless tin

Holder: Case: 15% glass filled PBT (Polybutylene Terephthalate)
Interface Clips: CDA 7025
Interface Clip Plating: Electroless tin
Contact Lubricant: Fluoroether grease
Box Lug: Copper
DIN-Rail Springs: Stainless steel

Ratings*:

Volts: — 12Vdc (2kA surge current)
— 24Vdc (2kA surge current)
— 48Vdc (2kA surge current)
— 120Vac (7kA-18kA surge current)
— 240Vac (7kA-18kA surge current)

* See Catalog Numbers table for all specifications pertaining to specific voltage ratings.

Agency Information: UL Recognized (UL 1449) for AC products, (UL 497B) for DC products, CSA Approved.

Dimensions -in

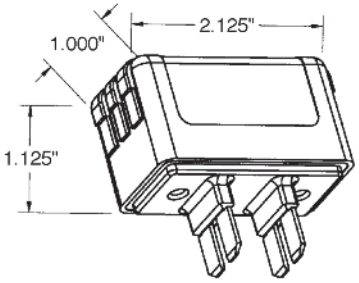

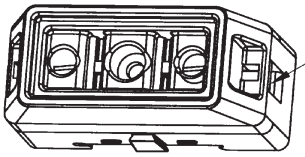

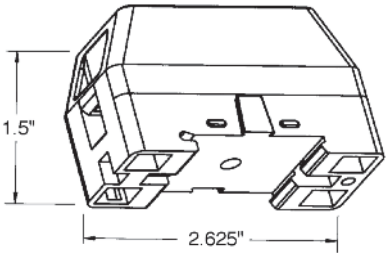

Product Specifications:

1. All TVS devices have non-polarized electrical connections as shown.
2. Suppressor voltage characteristics per chart.
3. Suppressor to provide non-interrupted service.
4. Enclosure material is 94V0 flame and explosion resistant.
5. Product markings show manufacturer, part number and safety warnings as required.
6. Mechanical dimensions as noted.
7. Suppressor Status LED as shown.
8. AC units operate on either 50 or 60Hz.

Catalog Numbers

Catalog Numbers	Voltage Application	MCOV	Technology	SVR 500A, 8x20µs	Surge Current Rating	Agency Information	Label Color
TVS12DCD	12Vdc	14Vdc	SASD	36Vdc	2kA	UL 497B	Red
TVS24DCD	24Vdc	28Vdc	SASD	58Vdc	2kA	UL 497B	White
TVS48DCD	48Vdc	57Vdc	SASD	90Vdc	2kA	UL 497B	Black
TVS120ACD	120Vac	140Vac	SASD	330Vac	7kA	UL 1449	Blue
TVS120ACM	120Vac	140Vac	MOV	500Vac	18kA	UL 1449	Grey
TVS240ACD	240Vac	280Vac	SASD	600Vac	7kA	UL 1449	Blue
TVS240ACM	240Vac	280Vac	MOV	800Vac	18kA	UL 1449	Grey

Data Sheet: 9006

BOM #23

Product: 1492-MCGAT115

Description: 1492-MC Circuit Breaker

Representative Photo Only (actual product may vary based on configuration selections)

CIRCUIT BREAKER DATA	
Voltage Rating	120 V AC
Type of Device	Ground Fault Circuit Interrupters (GFCI), Panel mounting
AIC Rating	With Self Test Capability
Number of Poles	1 Pole
Continuous Ampere Rating	15 Amps

CERTIFICATIONS AND APPROVALS	
UL	489 Listed Circuit Breaker (CSA 22.2 No. 5.1)
UL	Guide No. DIVQ, File No. E197878
For UL Certifications Directory:	http://database.ul.com/cgi-bin/XYV/template/LISEXT/1FRAME/index.htm

BOM #24

Product: 1492-GH100

Description: 1492-GH High Density Mini Circuit Breakers (Push to Set)

Representative Photo Only (actual product may vary based on configuration selections)

MINIATURE CIRCUIT BREAKER DATA	
Electrical Standards	UL
Amp Rating	10.0 A

CERTIFICATIONS AND APPROVALS	
UL	1077, Guide No. QVNU2, File No. E65138
CSA	22.2 NO. 235
VDE	0631 (EN 60934)
CE	Marked
For UL Certifications Directory:	http://database.ul.com/cgi-bin/XYV/template/LISEXT/1FRAME/index.htm

Product: 1492-JG3

Description: 1492 IEC Screw Terminal Blocks

BOM #25

Representative Photo Only (actual product may vary based on configuration selections)

BLOCK STYLE	
Base Block Style	Grounding Blocks
BASE DATA	
Base Block Type	One-Circuit Feed-Through Ground Block
DETAIL DATA	
Features	Standard Feedthrough
Maximum Wire Size & Rating	UL: 22-12 AWG\nCSA: 22-12 AWG\nIEC: 2.5mm²\nEEx e II: 2.5mm²/20-14 AWG
Color	Green / Yellow Stripe (Standard)
CERTIFICATIONS AND APPROVALS	
UR	UL 486E, UL 1059; Reference File: E40735, E187022
CSA	CSA C22.2 No. 65, No. 158; On Website, Name: Rockwell, Keyword Search: 1492
IEC	EN 60947-1, EN 60947-7-1(Feed-Through), -2(Ground), -3(Fuse)
ATEX	http://www.rockwellautomation.com/products/certification/ex/excert.html
Short Circuit Current Rating	This terminal block carries a minimum of 10kA SCCR rating for all protection methods. Please see the table for other possible elevated ratings.
For CSA Certifications:	http://directories.csa-international.org/directorymain.asp
For UL Certifications Directory:	http://database.ul.com/cgi-bin/XYV/template/LISEXT/1FRAME/index.htm

BOM #26

Product: 1492-EBJ3-Y

Description: 1492 Terminal Block Accessories

ACCESSORY ITEMS

Accessories	End Barriers, Partition Plates, and Terminal Covers

SDU Series, DIN Rail AC UPS

The SDU DIN Rail UPS combines an industry leading compact design with a wide operation temperature range and unique installation options. The SDU series provides economical protection from damaging impulses and power interruptions. These units include easy to wire screw terminations for critical devices needing battery back up such as computer based control systems.

E179213

Applications

- Programmable Logic Controllers
- Factory Automation
- Robotics
- Conveying Equipment
- Computer-based Control Systems

Features

- Lightweight, compact industrial design
- Wide operation temperature range (0ºC to 50ºC)
- Cold start capability
- Phone/dataline surge protection
- Software and cable included for easy installation
- Simulated sinewave output
- RS232 communication port
- USB communication port (optional)
- Form C dry contact relay (optional)
- Panel/wall mounting brackets (optional)
- Remote turn-on and shut-off capabilities
- Two year limited warranty

Certifications and Compliances

120V Models

- c UL us UL Recognized Component, UPS Equipment
  - UL 60950-1/CSA C22.2 No. 60950-1
  - Suitable for UL 508, CSA C22.2 No. 107.1 Ind. Control Equipment Applications with no derating
    - Overvoltage Cat III, Pollution Degree III

230V Models

- CE
  - EN62040-1-1

Related Products

- Portable MCR Power Conditioners
- STV Surge Protective Devices
- SDN DIN Rail Power Supplies
- STFV Plus Active Tracking® Filters

Selection Table

Capacity (VA/W)	Catalog Number	Volts, Frequency In/Out	Typical Back–up Time (minutes) *	Input/Output Connections	Approx. Ship Weight – lbs (kg)
500/300	**SDU 500**	120 Vac, 50/60 Hz	4	IP20 touch proof, screw terminals. Wire range: 10 ~ 24 AWG.	10.7 (4.70)
850/510	**SDU 850**		2		11.4 (5.00)
500/300	**SDU 500–5**	230 Vac, 50/60 Hz	4		11.5 (5.20)
850/510	**SDU 850–5**		2		11.9 (5.40)

* At full load.

SDU Accessories

Catalog Number	Description	Approx. Ship Weight – lbs (kg)
RELAYCARD–SDU	Dry contact I/O relay box, IP20 touch proof screw terminals, wire size range 12~22 AWG (IEC 2.5mm); N.O./N.C. form "C" contact. Relay contact signal for "On Battery", "Low Battery" and "UPS Shutdown".	1.0 (0.45)
UPSMON–USB	RS232 to USB adapter cable	1.0 (0.45)
SDU–PMBRK	Mounting brackets to secure UPS to wall, back of panel or enclosure.	1.0 (0.45)

Specifications

Catalog Number	SDU 500	SDU 850	SDU 500–5	SDU 850–5
Capacity (VA/Watts)	500/300	850/510	500/300	850/510
Load Power Factor	0.6			
Dimensions – inches (mm)				
Unit (H x W x D) – in. (mm)	4.88 x 11.1 x 4.55 (124.0 x 281.0 x 116.0)			
Weight – lbs (kg)	10.7 (4.70)	11.4 (5.00)	11.5 (5.20)	11.9 (5.40)
Input Parameters				
Voltage	120 V (+10%, -20%)		230 V (+/- 20%)	
Frequency	50 +/- 5 Hz or 60 Hz +/- 6 Hz (auto sensing)			
Output AC Parameters				
Voltage (Battery Mode)	Step sinewave			
	+/- 5%			
Frequency (On Battery)	50 or 60 Hz			
	+/- 0.3 Hz			
Overload Protection	UPS automatic shutdown if overload exceeds 105% of nominal at 20 seconds, 120% at 10 seconds, 130% at 3 seconds			
Short Circuit	UPS output cut off immediately			
Battery Parameters				
Battery Type	Sealed, non-spillable, maintenance-free lead acid batteries			
Transfer Time	4 - 6 ms typical			
Back–up Time * (minutes)	4.5/18	2.5/10	4.5/18	2.5/10
Recharge Time	8 hours to 90% capacity after full discharge			
Environmental				
Operating Temperature	0°C to 50°C			
Storage Temperature	-15°C to 60°C			
Relative Humidity	1% to 95%, non-condensing			
Ambient Operation	1-95% humidity non-condensing, 0-50°C up to 5,000 ft. (1500m)			
Audible Noise	< 40dBA (1 meter from surface)			
Standards				
EMC	FCC Part 15, Subpart B, Class A; EMC: EN50091-2, EN61000-3-2, EN61000-3-3, IEC60801-2, IEC60801-3, IEC60801-4, IEC61000-2-2			
Elevation	5000 ft. without derating			
Shock & Vibration	According to the International Safe Transit Association standard ISTA 2A.			
Mounting	To be mounted on DIN TS35/7.5 or TS35/15 rail system. Chassis mounting permissible via optional brackets. Unit handles normal shock and vibration of industrial use and transportation without coming off rail.			

* At full load/half load.

BOM #28

Wireless module - RAD-900-IFS - 2901540

Please be informed that the data shown in this PDF Document is generated from our Online Catalog. Please find the complete data in the user's documentation. Our General Terms of Use for Downloads are valid
(http://phoenixcontact.com/download)

Bidirectional, Radioline 900 MHz transceiver for wireless transmission of serial and I/O data

Product Description

Radioline is the new wireless system for large systems. Special features include extremely easy assignment of inputs and outputs by simply turning the thumbwheel - without any programming. Radioline transmits I/O signals (I/O mode) or serial data (serial mode) and is therefore very versatile. Alternatively, I/O signals can now also be connected to controllers directly using the Modbus protocol (PLC/Modbus RTU mode).
In addition, you can implement various network structures: from a simple point-to-point connection to complex mesh networks. Thanks to the latest Trusted Wireless technology, Radioline is the ideal choice for industrial use.

Product Features

- Extended temperature range, -40°C ... +70°C
- Range of several kilometers thanks to adjustable data rates for the wireless interface (16 ... 500 kbps)
- Integrated RS-232/RS-485 interface
- Quick and easy startup without programming
- High degree of reliability due to Trusted Wireless 2.0 technology (AES encryption, frequency hopping method, and coexistence management)
- Mesh networks of up to 250 devices

Key Commercial Data

Packing unit	1 pc
Weight per Piece (excluding packing)	350.0 g
Custom tariff number	85176200
Country of origin	United States

Technical data

Note

Trade restriction	The products are offered exclusively for export outside the EU and the European Economic Area.

Dimensions

Wireless module - RAD-900-IFS - 2901540

Technical data

Dimensions

Width	35 mm
Height	99 mm
Depth	114.5 mm

Ambient conditions

Degree of protection	IP20
Ambient temperature (operation)	-40 °C ... 70 °C
	-40 °F ... 158 °F
Ambient temperature (storage/transport)	-40 °C ... 85 °C
	-40 °F ... 185 °F
Permissible humidity (operation)	20 % ... 85 %
Permissible humidity (storage/transport)	20 % ... 85 %
Altitude	2000 m
Vibration (operation)	in accordance with IEC 60068-2-6: 5g, 10 Hz ... 150 Hz
Shock	16g, 11 ms

General

Overvoltage category	II
Assembly instructions	on standard DIN rail NS 35 in accordance with EN 60715
Pollution degree	2
Housing material	PA 6.6-FR
Flammability rating according to UL 94	V0
Export note	The products are offered exclusively for export outside the European Economic Area (EEA).

Supply

Supply voltage range	10.8 V DC ... 30.5 V DC
Max. current consumption	328 mA (@24 V DC)
Nominal power consumption	1.7 W (30 dBm)
Power consumption	8.4 W (peak; 30 dBm)
Transient surge protection	Yes

Wireless interface

Antenna connection	RSMA (female)
Direction	Bi-directional
Frequency	900 MHz
Frequency range	902 MHz ... 928 MHz
Data rate	16 kbps (adjustable)
	125 kbps (adjustable)
	250 kbps (adjustable)

Wireless module - RAD-900-IFS - 2901540

Technical data

Wireless interface

	500 kbps (adjustable)
Receiver sensitivity	-112 dBm (16 kbps)
	-105 dBm (125 kbps)
	-102 dBm (250 kbps)
	-95 dBm (500 kbps)
Transmission power	max. 1 W (adjustable)
Range	± 32 km (The range may be considerably above or below that stated, and depends on the environment, antenna technology, and the product used)
Security	128-bit data encryption

Serial interface

Interface 1	RS-232
Connection method	COMBICON plug-in screw terminal block
	D-SUB 9 (socket)
	3-conductor
Transmission speed	0.3 … 115.2 kbps
Interface 2	RS-485
Connection method	COMBICON plug-in screw terminal block
	2-wire
Termination resistor	390 Ω (switchable via DIP switches)
	150 Ω (switchable via DIP switches)
	390 Ω (switchable via DIP switches)
Transmission speed	0.3 … 115.2 kbps

RSSI output

Number of outputs	1
Voltage output signal	0 V ... 3 V

RF link relay output

Number of outputs	1
Contact type	PDT
Contact material	PdRu, gold-plated
Maximum switching voltage	30 V AC/DC
Max. switching current	500 mA
Electrical service life	5 x 10^5 cycles with 0.5 A @ 30 V DC

Connection data

Connection method	Screw connection
Conductor cross section solid min.	0.2 mm²
Conductor cross section solid max.	2.5 mm²

Wireless module - RAD-900-IFS - 2901540

Technical data

Connection data

Conductor cross section flexible min.	0.2 mm²
Conductor cross section flexible max.	2.5 mm²
Conductor cross section AWG min.	24
Conductor cross section AWG max.	14
Stripping length	7 mm
Tightening torque	0.6 Nm
Screw thread	M3

Status indicator

Status display	Green LED (supply voltage, PWR)
	Green LED (bus communication, DAT)
	Red LED (periphery error, ERR)
	3 x green, 1 x yellow LED (LED bar graph receive quality, RSSI)
	Green LED (receive data, RX)
	Green LED (transmit data, TX)

Approvals and conformance

Conformance	FCC Directive, Part 15.247
UL, USA / Canada	Class I, Div. 2, Groups A, B, C, D
Standards/regulations	EN 300328
	EN 61000-6-2
	EN 61000-6-4
	EN 50371
	EN 60950-1

Standards and Regulations

Electromagnetic compatibility	Conformance with EMC Directive 2004/108/EC
Standards/regulations	EN 300328
	EN 61000-6-2
	EN 61000-6-4
	EN 50371
	EN 60950-1
Shock	16g, 11 ms
Flammability rating according to UL 94	V0
Interface description	Trusted Wireless
Security	128-bit data encryption
Vibration (operation)	in accordance with IEC 60068-2-6: 5g, 10 Hz ... 150 Hz
Conformance	FCC Directive, Part 15.247
	ISC Directive RSS 210

Wireless module - RAD-900-IFS - 2901540

Technical data

Standards and Regulations

UL, USA	Class I, Zone 2, AEx nA nC IIC T4
UL, USA / Canada	Class I, Div. 2, Groups A, B, C, D
UL, Canada	Class I, Zone 2, Ex nA nC nL IIC T4 Gc X
CSA	CSA C22.2

Classifications

eCl@ss

eCl@ss 4.0	27230207
eCl@ss 4.1	27230207
eCl@ss 5.0	27230207
eCl@ss 5.1	27242208
eCl@ss 6.0	27242208
eCl@ss 7.0	27242208

ETIM

ETIM 3.0	EC001423
ETIM 4.0	EC000310
ETIM 5.0	EC000310

UNSPSC

UNSPSC 6.01	30211506
UNSPSC 7.0901	43223108
UNSPSC 11	39121008
UNSPSC 12.01	43223108
UNSPSC 13.2	43223108

Approvals

Approvals

Approvals

UL Listed / cUL Listed / cULus Listed

Ex Approvals

UL Listed / cUL Listed / cULus Listed

Wireless module - RAD-900-IFS - 2901540

Approvals

Approvals submitted

Approval details

UL Listed

cUL Listed

cULus Listed

Drawings

Block diagram

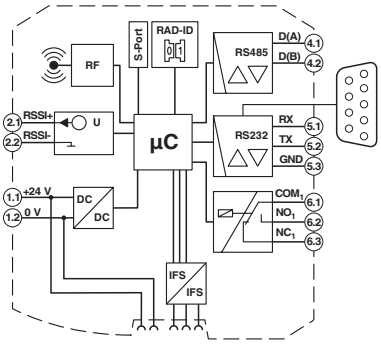

Dimensional drawing

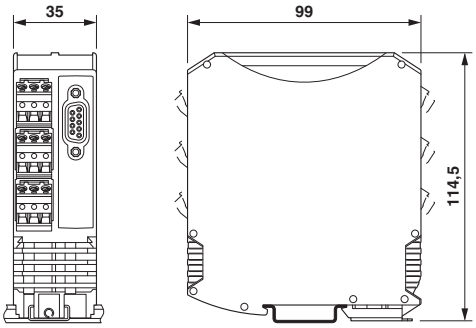

Phoenix Contact 2015 © - all rights reserved
http://www.phoenixcontact.com

BOM #29

I/O extension module - RAD-AO4-IFS - 2901538

Please be informed that the data shown in this PDF Document is generated from our Online Catalog. Please find the complete data in the user's documentation. Our General Terms of Use for Downloads are valid
(http://phoenixcontact.com/download)

Analog I/O extension module with 4 analog current/voltage outputs (0/4 mA ... 20 mA, 0...10 V), with screw connection, incl. DIN rail connector

Product Features

- Channel-to-channel electrical isolation
- Extended temperature range, -40°C ... +70°C
- Easy module replacement even during operation (hot swap)
- Suitable for ATEX zone 2
- Easy startup via thumbwheel

Key Commercial Data

Packing unit	1 pc
Weight per Piece (excluding packing)	220.0 g
Custom tariff number	85389091
Country of origin	Germany

Technical data

Note

Utilization restriction	EMC: class A product, see manufacturer's declaration in the download area

Dimensions

Width	17.5 mm
Height	99 mm
Depth	114.5 mm

Ambient conditions

I/O extension module - RAD-AO4-IFS - 2901538

Technical data

Ambient conditions

Degree of protection	IP20
Ambient temperature (operation)	-40 °C ... 70 °C (>55°C derating)
	-40 °F ... 158 °F (>131°F derating)
Ambient temperature (storage/transport)	-40 °C ... 85 °C
	-40 °F ... 185 °F
Permissible humidity (operation)	20 % ... 85 %
Permissible humidity (storage/transport)	20 % ... 85 %
Altitude	2000 m
Vibration (operation)	in accordance with IEC 60068-2-6: 5g, 10 Hz ... 150 Hz
Shock	16g, 11 ms

General

Overvoltage category	II
Mounting position	any
Assembly instructions	on standard DIN rail NS 35 in accordance with EN 60715
Pollution degree	2
Housing material	PA 6.6-FR
Flammability rating according to UL 94	V0
MTTF	999 Years (Telcordia standard, 25°C temperature, 21% operating cycle (5 days a week, 8 hours a day))
	404 Years (Telcordia standard, 40°C temperature, 34.25% operating cycle (5 days a week, 12 hours a day))
	156 Years (Telcordia standard, temperature 40 °C, operating cycle 100 % (7 days a week, 24 hours a day))

Supply

Supply voltage range	19.2 V DC ... 30.5 V DC (TBUS)
Max. current consumption	≤ 115 mA (At 24 V DC, at 25°C)
Transient surge protection	Yes

Analog outputs

Number of outputs	4
Voltage output signal	0 V ... 10 V
Max. voltage output signal	approx. 10.83 V
Load	≥ 10 kΩ
Precision	typ. 0.5 % (Voltage output)
Current output signal	0 mA ... 20 mA
	4 mA ... 20 mA
Max. current output signal	approx. 21.67 mA
Load	≤ 500 Ω

I/O extension module - RAD-AO4-IFS - 2901538

Technical data

Analog outputs

Precision	≤ 0.02 % (at 25 °C)
Resolution	16 bit
Temperature coefficient, typical	0.0025 %/K (at -40 °C ... +70 °C)
Behavior of the outputs (adjustable via DIP switch)	Hold / Reset
Protective circuit	Transient protection of outputs

Electrical isolation

Analog I/O	50 V (Rated insulation voltage (in each case between the TBUS analog outputs / supply, reinforced insulation according to EN 61010))

Test voltage

Analog I/O	1.5 kV AC (50 Hz, 1 min.)

Connection data

Connection method	Screw connection
Conductor cross section solid min.	0.2 mm²
Conductor cross section solid max.	2.5 mm²
Conductor cross section flexible min.	0.2 mm²
Conductor cross section flexible max.	2.5 mm²
Conductor cross section AWG min.	24
Conductor cross section AWG max.	14
Stripping length	7 mm
Tightening torque	0.6 Nm
Screw thread	M3

Status indicator

Status display	Green LED (supply voltage, PWR)
	Green LED (bus communication, DAT)
	Red LED (periphery error, ERR)

Approvals and conformance

Conformance	CE-compliant
IECEx	Ex nA IIC T4 Gc
UL, USA / Canada	UL 508 Listed
Standard designation	EMC Directive 2004/108/EC
Standards/regulations	EN 61000-6-2
Standard designation	EMC Directive 2004/108/EC
Standards/regulations	EN 61000-6-4
Standard designation	Ex Directive (ATEX)
Standards/regulations	EN 60079-0

I/O extension module - RAD-AO4-IFS - 2901538

Technical data

Approvals and conformance

Standard designation	Ex Directive (ATEX)
Standards/regulations	EN-60079-15

Standards and Regulations

Electromagnetic compatibility	Conformance with EMC Directive 2004/108/EC
Standard designation	EMC Directive 2004/108/EC
Standards/regulations	EN 61000-6-2
Standard designation	EMC Directive 2004/108/EC
Standards/regulations	EN 61000-6-4
Standard designation	Ex Directive (ATEX)
Standards/regulations	EN 60079-0
Standard designation	Ex Directive (ATEX)
Standards/regulations	EN-60079-15
Shock	16g, 11 ms
Noise emission	EN 61000-6-4
Noise immunity	EN 61000-6-2
Flammability rating according to UL 94	V0
Vibration (operation)	in accordance with IEC 60068-2-6: 5g, 10 Hz ... 150 Hz
Conformance	CE-compliant
IECEx	Ex nA IIC T4 Gc
UL, USA / Canada	UL 508 Listed
	Class I, Div. 2, Groups A, B, C, D T4A
	Class I, Zone 2, IIC T4

Classifications

eCl@ss

eCl@ss 4.0	27230207
eCl@ss 4.1	27230207
eCl@ss 5.0	27230207
eCl@ss 5.1	27242208
eCl@ss 6.0	27242208
eCl@ss 7.0	27242208
eCl@ss 8.0	27242601

ETIM

ETIM 3.0	EC001423
ETIM 4.0	EC000310

I/O extension module - RAD-AO4-IFS - 2901538

Classifications

ETIM

ETIM 5.0	EC001596

UNSPSC

UNSPSC 6.01	30211506
UNSPSC 7.0901	43223108
UNSPSC 11	39121008
UNSPSC 12.01	43223108
UNSPSC 13.2	43223108

Approvals

Approvals

Approvals

UL Listed / cUL Listed / EAC / cULus Listed

Ex Approvals

ATEX / IECEx / UL Listed / cUL Listed / cULus Listed

Approvals submitted

Approval details

UL Listed

cUL Listed

EAC

cULus Listed

I/O extension module - RAD-AO4-IFS - 2901538

Drawings

Schematic diagram

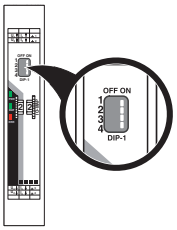

DIP switches

Schematic diagram

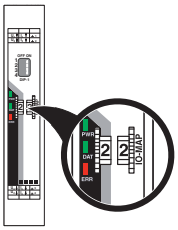

Thumb wheel

I/O extension module - RAD-AO4-IFS - 2901538

Block diagram

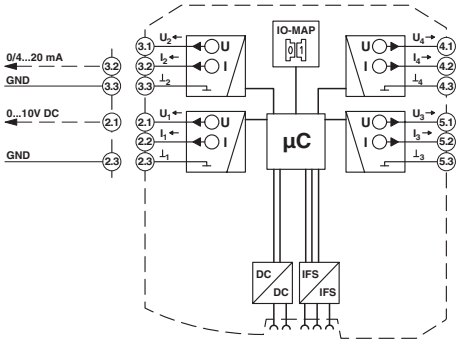

Functional drawing

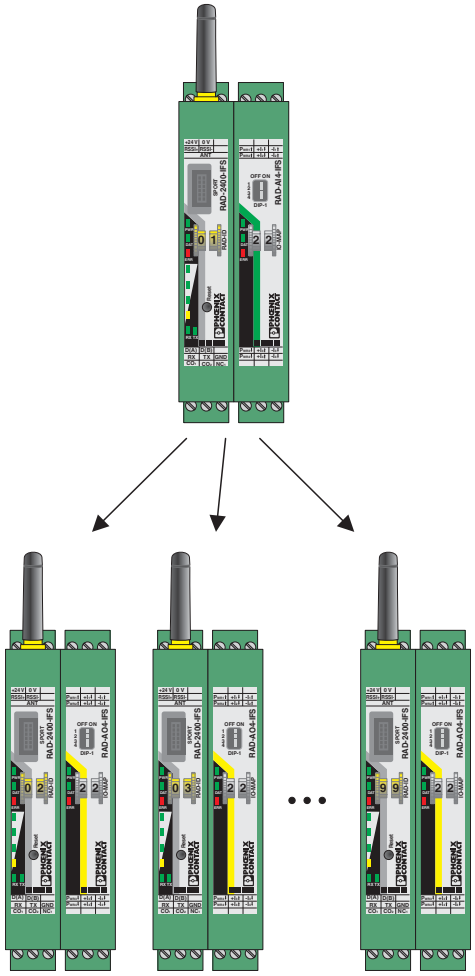

Assignment of analog inputs and analog outputs

I/O extension module - RAD-AO4-IFS - 2901538

Dimensional drawing

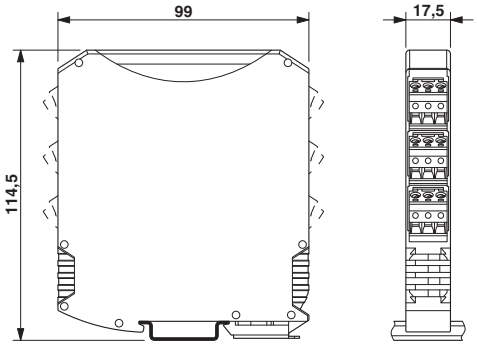

Schematic diagram

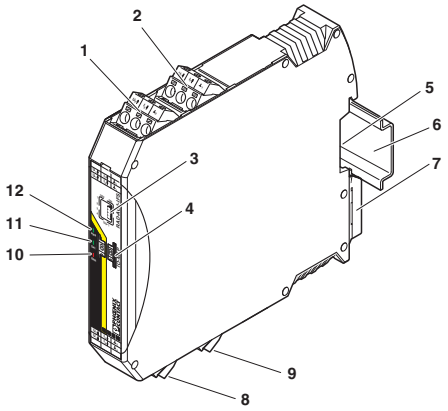

Function elements

I/O extension module - RAD-AO4-IFS - 2901538

Application drawing

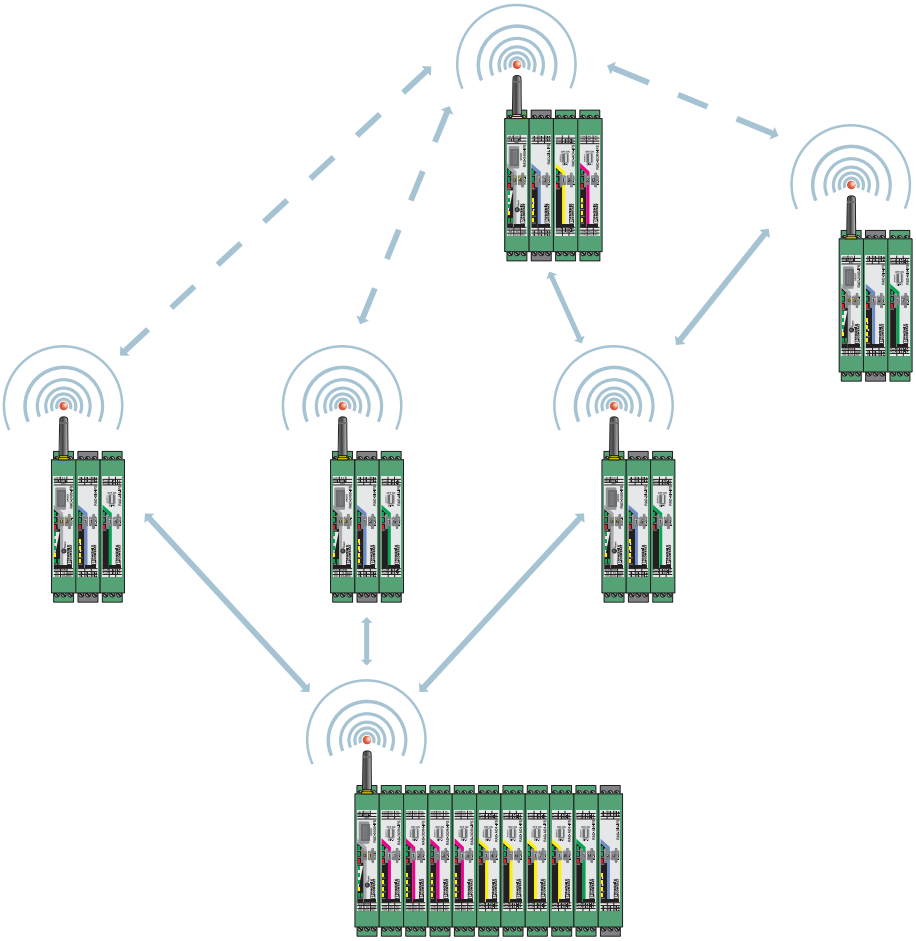

Wireless module in I/O data mode

I/O extension module - RAD-AO4-IFS - 2901538

Application drawing

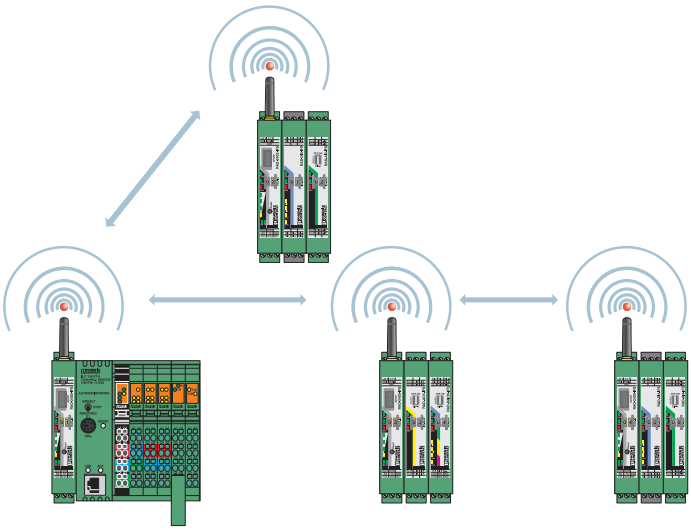

Wireless module in PLC/Modbus RTU mode

Phoenix Contact 2015 © - all rights reserved
http://www.phoenixcontact.com

Panel Materials for CP-101

CONTINUOUS HINGE WITH CLAMPS, TYPE 12

INDUSTRY STANDARDS

UL 508A Listed; Type 12, 13; File No. E61997
cUL Listed per CSA C22.2 No. 94; Type 12, 13; File No. E61997

NEMA/EEMAC Type 12 and 13
CSA, File No. 42186: Type 12
IEC 60529, IP65

APPLICATION

For applications requiring a bright white interior to increase control visibility, this enclosure includes a padlocking hasp and staple for security and screw-down clamps for secure closure.

SPECIFICATIONS

- Enclosure bodies are 14 or 16 gauge steel. Doors are 14 gauge steel.
- Seams continuously welded and ground smooth
- External wall-mounting brackets
- Formed external return flanges around all sides of enclosure opening
- Screw-down door clamps
- Removable heavy-gauge continuous hinge pin
- Hasp and staple for padlocking
- Data pocket is high-impact thermoplastic
- Collar studs provided for mounting optional panels
- Bonding provision on door

FINISH

White inside with ANSI 61 gray finish outside.

ACCESSORIES

See also Accessories.
Drip Shield Kit for Type 12 Enclosures
Electric Heater
Fast-Operating Clamp Assembly
Compact Cooling Fans
Steel and Stainless Steel Window Kits

MODIFICATION AND CUSTOMIZATION

Hoffman excels at modifying and customizing products to your specifications. Contact your local Hoffman sales office or distributor for complete information.

BULLETIN: A12

Standard Product

Catalog Number	AxBxC in./mm	Body Gauge	Panel	Conductive Panel	Panel Size D x E in./mm	F in./mm	Number of Clamps	Data Pocket
A122406LP	12.00 x 24.00 x 6.00 305 x 610 x 152	16	A12P24	A12P24G	9.00 x 21.00 229 x 533	3.00 76	2	Small
A161206LP	16.00 x 12.00 x 6.00 406 x 305 x 152	16	A16P12	A16P12G	13.00 x 9.00 330 x 229	1.25 32	2	Small
A161606LP	16.00 x 16.00 x 6.00 406 x 406 x 152	16	A16P16	A16P16G	13.00 x 13.00 330 x 330	3.00 76	2	Small
A162006LP	16.00 x 20.00 x 6.00 406 x 508 x 152	16	A20P16	A20P16G	17.00 x 13.00 432 x 330	3.00 76	2	Small
A201206LP	20.00 x 12.00 x 6.00 508 x 305 x 152	16	A20P12	A20P12G	17.00 x 9.00 432 x 229	1.25 32	2	Small
A201606LP	20.00 x 16.00 x 6.00 508 x 406 x 152	16	A20P16	A20P16G	17.00 x 13.00 432 x 330	3.00 76	2	Small
A202006LP	20.00 x 20.00 x 6.00 508 x 508 x 152	16	A20P20	A20P20G	17.00 x 17.00 432 x 432	3.00 76	2	Small
A202406LP	20.00 x 24.00 x 6.00 508 x 610 x 152	16	A24P20	A24P20G	21.00 x 17.00 533 x 432	3.00 76	2	Small
A241206LP	24.00 x 12.00 x 6.00 610 x 305 x 152	16	A12P24	A12P24G	9.00 x 21.00 229 x 533	1.25 32	2	Small
A241606LP	24.00 x 16.00 x 6.00 610 x 406 x 152	16	A24P16	A24P16G	21.00 x 13.00 533 x 330	3.00 76	2	Small
A242006LP	24.00 x 20.00 x 6.00 610 x 508 x 152	16	A24P20	A24P20G	21.00 x 17.00 533 x 432	3.00 76	2	Small
A242406LP	24.00 x 24.00 x 6.00 610 x 610 x 152	16	A24P24	A24P24G	21.00 x 21.00 533 x 533	3.00 76	2	Small
A301606LP	30.00 x 16.00 x 6.00 762 x 406 x 152	14	A30P16	A30P16G	27.00 x 13.00 686 x 330	3.00 76	2	Small
A302006LP	30.00 x 20.00 x 6.00 762 x 508 x 152	14	A30P20	A30P20G	27.00 x 17.00 686 x 432	3.00 76	2	Small
A302406LP	30.00 x 24.00 x 6.00 762 x 610 x 152	14	A30P24	A30P24G	27.00 x 21.00 686 x 533	3.00 76	2	Large
A362406LP	36.00 x 24.00 x 6.00 914 x 610 x 152	14	A36P24	A36P24G	33.00 x 21.00 838 x 533	3.00 76	2	Large
A363006LP	36.00 x 30.00 x 6.00 914 x 762 x 152	14	A36P30	A36P30G	33.00 x 27.00 838 x 686	3.00 76	2	Large
A122408LP	12.00 x 24.00 x 8.00 305 x 610 x 203	16	A12P24	A12P24G	9.00 x 21.00 229 x 533	3.00 76	2	Small
A161208LP	16.00 x 12.00 x 8.00 406 x 305 x 203	16	A16P12	A16P12G	13.00 x 9.00 330 x 229	1.25 32	2	Small
A161608LP	16.00 x 16.00 x 8.00 406 x 406 x 203	16	A16P16	A16P16G	13.00 x 13.00 330 x 330	3.00 76	2	Small

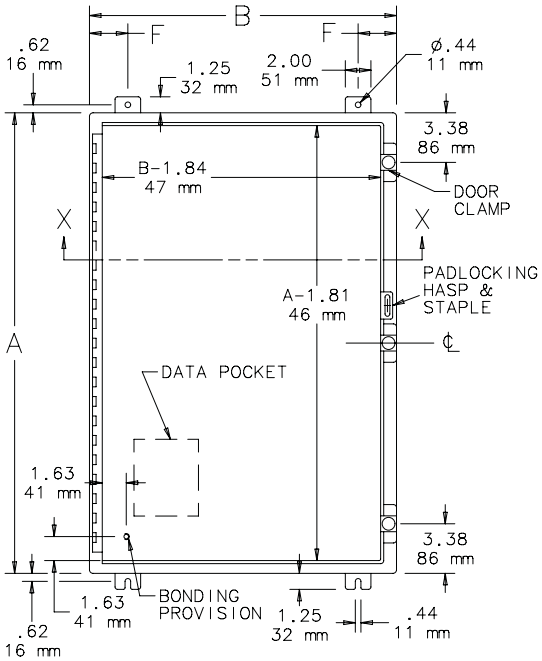

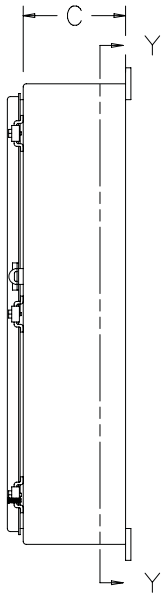

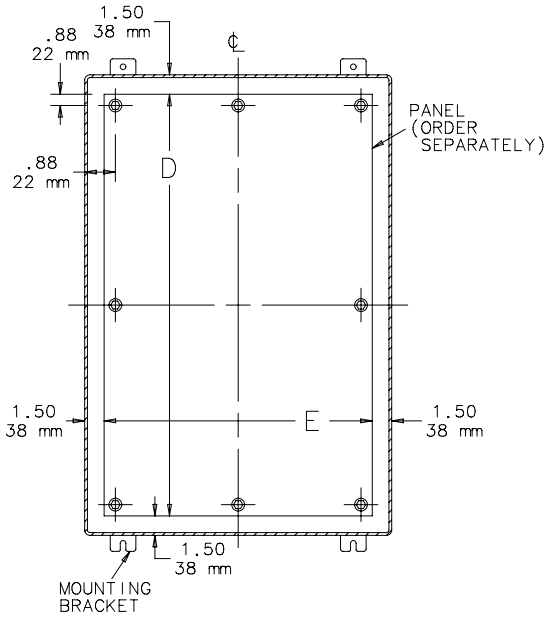

SECTION Y-Y

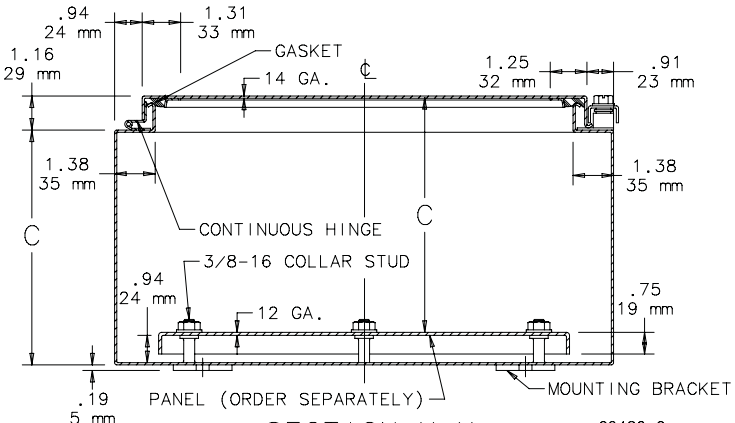

SECTION X-X

BOM #4

Product: 1492-EBJ3-Y

Description: 1492 Terminal Block Accessories

ACCESSORY ITEMS

Accessories	End Barriers, Partition Plates, and Terminal Covers

Product: 1492-JG3

Description: 1492 IEC Screw Terminal Blocks

BOM #5

Representative Photo Only (actual product may vary based on configuration selections)

BLOCK STYLE	
Base Block Style	Grounding Blocks
BASE DATA	
Base Block Type	One-Circuit Feed-Through Ground Block
DETAIL DATA	
Features	Standard Feedthrough
Maximum Wire Size & Rating	UL: 22-12 AWG\nCSA: 22-12 AWG\nIEC: 2.5mm²\nEEx e II: 2.5mm²/20-14 AWG
Color	Green / Yellow Stripe (Standard)
CERTIFICATIONS AND APPROVALS	
UR	UL 486E, UL 1059; Reference File: E40735, E187022
CSA	CSA C22.2 No. 65, No. 158; On Website, Name: Rockwell, Keyword Search: 1492
IEC	EN 60947-1, EN 60947-7-1(Feed-Through), -2(Ground), -3(Fuse)
ATEX	http://www.rockwellautomation.com/products/certification/ex/excert.html
Short Circuit Current Rating	This terminal block carries a minimum of 10kA SCCR rating for all protection methods. Please see the table for other possible elevated ratings.
For CSA Certifications:	http://directories.csa-international.org/directorymain.asp
For UL Certifications Directory:	http://database.ul.com/cgi-bin/XYV/template/LISEXT/1FRAME/index.htm

BOM #6

Product: 1492-GS1G150

Description: 1492-GS High Density Mini Circuit Breakers (Toggle Style)

Representative Photo Only (actual product may vary based on configuration selections)

MINIATURE CIRCUIT BREAKER DATA	
Electrical Standards	UL
Number of Poles	1 pole
Magnetic Trip Range	G-Trip Characteristics - Inductive Loads (AC)
Amp Rating	15.0 A
Optional Auxiliary Contact	No Contact

CERTIFICATIONS AND APPROVALS	
UL	1077, Guide No. QVNU2, File No. E65138
CSA	22.2 NO. 235
EN	60934
CE	Marked
For UL Certifications Directory:	http://database.ul.com/cgi-bin/XYV/template/LISEXT/1FRAME/index.htm

BOM #7

Power supply unit - UNO-PS/1AC/24DC/ 60W - 2902992

Please be informed that the data shown in this PDF Document is generated from our Online Catalog. Please find the complete data in the user's documentation. Our General Terms of Use for Downloads are valid
(http://phoenixcontact.com/download)

Primary-switched UNO POWER power supply for DIN rail mounting, input: 1-phase, output: 24 V DC/60 W

Product Description

UNO POWER power supplies with basic functionality
Thanks to their high power density, compact UNO POWER power supplies are the ideal solution for loads up to 100 W, particularly in compact control boxes. The power supply units are available in various performance classes and overall widths. Their high degree of efficiency and low idling losses ensure a high level of energy efficiency.

Product Features

- Flexible mounting by simply snapping onto the DIN rail
- More space in the control cabinet with up to 20 % higher power density
- Maximum energy efficiency, thanks to over 90 % efficiency and extremely low idling losses under 0.3 W

Key Commercial Data

Packing unit	1 pc
Weight per Piece (excluding packing)	240.0 g
Custom tariff number	85044030
Country of origin	Germany

Technical data

Dimensions

Width	35 mm
Height	90 mm
Depth	84 mm

Ambient conditions

Degree of protection	IP20
Ambient temperature (operation)	-25 °C ... 70 °C (> 55° C derating : 2.5%/K)

Power supply unit - UNO-PS/1AC/24DC/ 60W - 2902992

Technical data

Ambient conditions

Ambient temperature (storage/transport)	-40 °C ... 85 °C
Max. permissible relative humidity (operation)	≤ 95 % (at 25 °C, non-condensing)
Noise immunity	EN 61000-6-2:2005

Input data

Nominal input voltage range	100 V AC ... 240 V AC
Input voltage range	85 V AC ... 264 V AC
AC frequency range	45 Hz ... 65 Hz
Inrush surge current	< 30 A (typical)
Power failure bypass	> 20 ms (120 V AC)
	> 85 ms (230 V AC)
Input fuse	2.5 A (slow-blow, internal)
Choice of suitable circuit breakers	6 A ... 16 A (Characteristics B, C, D, K)
Type of protection	Transient surge protection
Protective circuit/component	Varistor

Output data

Nominal output voltage	24 V DC ±1 %
Nominal output current	2.5 A (-25°C ... 55°C)
Derating	55 °C ... 70 °C (2.5%/K)
Connection in parallel	Yes, for redundancy and increased capacity
Connection in series	Yes
Control deviation	< 1 % (change in load, static 10 % ... 90 %)
	< 2 % (Dynamic load change 10 % ... 90 %, 10 Hz)
	< 0.1 % (change in input voltage ±10 %)
Residual ripple	< 30 mV_{PP} (with nominal values)
Output power	60 W
Typical response time	< 1 s
Maximum power dissipation in no-load condition	< 0.3 W
Power loss nominal load max.	< 7 W

General

Net weight	0.2 kg
Efficiency	> 90 % (for 230 V AC and nominal values)
Insulation voltage input/output	4 kV AC (type test)
	3 kV AC (routine test)
Protection class	II (in closed control cabinet)
MTBF (IEC 61709, SN 29500)	> 785000 h (40°C)
Mounting position	horizontal DIN rail NS 35, EN 60715

Power supply unit - UNO-PS/1AC/24DC/ 60W - 2902992

Technical data

General

Assembly instructions	Alignable: 0 mm horizontally, 30 mm vertically
Electromagnetic compatibility	Conformance with EMC Directive 2004/108/EC
Low Voltage Directive	Conformance with LV directive 2006/95/EC
Standard – Electrical equipment of machines	EN 60204-1
Standard - Electrical safety	IEC 60950-1/VDE 0805 (SELV)
Standard – Electronic equipment for use in electrical power installations and their assembly into electrical power installations	EN 50178/VDE 0160 (PELV)
Standard – Safety extra-low voltage	IEC 60950-1 (SELV) and EN 60204-1 (PELV)
Standard - Safe isolation	DIN VDE 0100-410
Standard – Limitation of mains harmonic currents	EN 61000-3-2
Approval - requirement of the semiconductor industry with regard to mains voltage dips	EN 61000-4-11
Information technology equipment - safety (CB scheme)	CB Scheme
UL approvals	UL Listed UL 508
	UL/C-UL Recognized UL 60950
	NEC Class 2 as per UL 1310
	UL ANSI/ISA-12.12.01 Class I, Division 2, Groups A, B, C, D T4A (Hazardous Location)

Connection data, input

Connection method	Screw connection
Conductor cross section solid min.	0.2 mm²
Conductor cross section solid max.	2.5 mm²
Conductor cross section flexible min.	0.2 mm²
Conductor cross section flexible max.	2.5 mm²
Conductor cross section AWG min.	24
Conductor cross section AWG max.	14
Stripping length	8 mm
Screw thread	M3

Connection data, output

Connection method	Screw connection
Conductor cross section solid min.	0.2 mm²
Conductor cross section solid max.	2.5 mm²
Conductor cross section flexible min.	0.2 mm²
Conductor cross section flexible max.	2.5 mm²
Conductor cross section AWG min.	24
Conductor cross section AWG max.	14
Stripping length	8 mm

Power supply unit - UNO-PS/1AC/24DC/ 60W - 2902992

Technical data

Connection data, output

Screw thread	M3

Standards and Regulations

Electromagnetic compatibility	Conformance with EMC Directive 2004/108/EC
Shock	30g in each direction, according to IEC 60068-2-27
Noise immunity	EN 61000-6-2:2005
Connection in acc. with standard	CUL
Standards/regulations	EN 61000-4-3
	EN 61000-4-4
	EN 61000-4-6
Standard – Electrical equipment of machines	EN 60204-1
Standard - Electrical safety	IEC 60950-1/VDE 0805 (SELV)
Standard – Electronic equipment for use in electrical power installations and their assembly into electrical power installations	EN 50178/VDE 0160 (PELV)
Standard – Safety extra-low voltage	IEC 60950-1 (SELV) and EN 60204-1 (PELV)
Standard - Safe isolation	DIN VDE 0100-410
Standard – Limitation of mains harmonic currents	EN 61000-3-2
UL approvals	UL Listed UL 508
	UL/C-UL Recognized UL 60950
	NEC Class 2 as per UL 1310
	UL ANSI/ISA-12.12.01 Class I, Division 2, Groups A, B, C, D T4A (Hazardous Location)
Vibration (operation)	< 15 Hz, amplitude ±2.5 mm (according to IEC 60068-2-6)
Low Voltage Directive	Conformance with LV directive 2006/95/EC
Approval - requirement of the semiconductor industry with regard to mains voltage dips	EN 61000-4-11
Information technology equipment - safety (CB scheme)	CB Scheme

Classifications

eCl@ss

eCl@ss 4.0	27040702
eCl@ss 4.1	27040702
eCl@ss 5.0	27049002
eCl@ss 5.1	27049002
eCl@ss 6.0	27049002
eCl@ss 7.0	27049002
eCl@ss 8.0	27049002
eCl@ss 9.0	27040701

Power supply unit - UNO-PS/1AC/24DC/ 60W - 2902992

Classifications

ETIM

ETIM 3.0	EC001039
ETIM 4.0	EC000599
ETIM 5.0	EC002540

UNSPSC

UNSPSC 6.01	30211502
UNSPSC 7.0901	39121004
UNSPSC 11	39121004
UNSPSC 12.01	39121004
UNSPSC 13.2	39121004

Approvals

Approvals

Approvals

UL Recognized / UL Listed / cUL Recognized / cUL Listed / IECEE CB Scheme / EAC / EAC / cULus Recognized / cULus Listed

Ex Approvals

UL Listed / cUL Listed / cULus Listed

Approvals submitted

Approval details

UL Recognized

UL Listed

cUL Recognized

Power supply unit - UNO-PS/1AC/24DC/ 60W - 2902992

Approvals

cUL Listed

IECEE CB Scheme

EAC

EAC

cULus Recognized

cULus Listed

Drawings

Block diagram

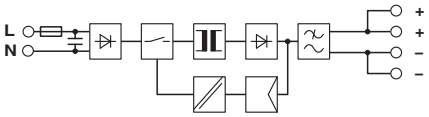

Phoenix Contact 2015 © - all rights reserved
http://www.phoenixcontact.com

BOM #8

Wireless module - RAD-900-IFS - 2901540

Please be informed that the data shown in this PDF Document is generated from our Online Catalog. Please find the complete data in the user's documentation. Our General Terms of Use for Downloads are valid
(http://phoenixcontact.com/download)

Bidirectional, Radioline 900 MHz transceiver for wireless transmission of serial and I/O data

Product Description

Radioline is the new wireless system for large systems. Special features include extremely easy assignment of inputs and outputs by simply turning the thumbwheel - without any programming. Radioline transmits I/O signals (I/O mode) or serial data (serial mode) and is therefore very versatile. Alternatively, I/O signals can now also be connected to controllers directly using the Modbus protocol (PLC/Modbus RTU mode).
In addition, you can implement various network structures: from a simple point-to-point connection to complex mesh networks. Thanks to the latest Trusted Wireless technology, Radioline is the ideal choice for industrial use.

Product Features

- Extended temperature range, -40°C ... +70°C
- Range of several kilometers thanks to adjustable data rates for the wireless interface (16 ... 500 kbps)
- Integrated RS-232/RS-485 interface
- Quick and easy startup without programming
- High degree of reliability due to Trusted Wireless 2.0 technology (AES encryption, frequency hopping method, and coexistence management)
- Mesh networks of up to 250 devices

Key Commercial Data

Packing unit	1 pc
Weight per Piece (excluding packing)	350.0 g
Custom tariff number	85176200
Country of origin	United States

Technical data

Note

Trade restriction	The products are offered exclusively for export outside the EU and the European Economic Area.

Dimensions

Wireless module - RAD-900-IFS - 2901540

Technical data

Dimensions

Width	35 mm
Height	99 mm
Depth	114.5 mm

Ambient conditions

Degree of protection	IP20
Ambient temperature (operation)	-40 °C ... 70 °C
	-40 °F ... 158 °F
Ambient temperature (storage/transport)	-40 °C ... 85 °C
	-40 °F ... 185 °F
Permissible humidity (operation)	20 % ... 85 %
Permissible humidity (storage/transport)	20 % ... 85 %
Altitude	2000 m
Vibration (operation)	in accordance with IEC 60068-2-6: 5g, 10 Hz ... 150 Hz
Shock	16g, 11 ms

General

Overvoltage category	II
Assembly instructions	on standard DIN rail NS 35 in accordance with EN 60715
Pollution degree	2
Housing material	PA 6.6-FR
Flammability rating according to UL 94	V0
Export note	The products are offered exclusively for export outside the European Economic Area (EEA).

Supply

Supply voltage range	10.8 V DC ... 30.5 V DC
Max. current consumption	328 mA (@24 V DC)
Nominal power consumption	1.7 W (30 dBm)
Power consumption	8.4 W (peak; 30 dBm)
Transient surge protection	Yes

Wireless interface

Antenna connection	RSMA (female)
Direction	Bi-directional
Frequency	900 MHz
Frequency range	902 MHz ... 928 MHz
Data rate	16 kbps (adjustable)
	125 kbps (adjustable)
	250 kbps (adjustable)

Wireless module - RAD-900-IFS - 2901540

Technical data

Wireless interface

	500 kbps (adjustable)
Receiver sensitivity	-112 dBm (16 kbps)
	-105 dBm (125 kbps)
	-102 dBm (250 kbps)
	-95 dBm (500 kbps)
Transmission power	max. 1 W (adjustable)
Range	± 32 km (The range may be considerably above or below that stated, and depends on the environment, antenna technology, and the product used)
Security	128-bit data encryption

Serial interface

Interface 1	RS-232
Connection method	COMBICON plug-in screw terminal block
	D-SUB 9 (socket)
	3-conductor
Transmission speed	0.3 … 115.2 kbps
Interface 2	RS-485
Connection method	COMBICON plug-in screw terminal block
	2-wire
Termination resistor	390 Ω (switchable via DIP switches)
	150 Ω (switchable via DIP switches)
	390 Ω (switchable via DIP switches)
Transmission speed	0.3 … 115.2 kbps

RSSI output

Number of outputs	1
Voltage output signal	0 V ... 3 V

RF link relay output

Number of outputs	1
Contact type	PDT
Contact material	PdRu, gold-plated
Maximum switching voltage	30 V AC/DC
Max. switching current	500 mA
Electrical service life	5 x 10^5 cycles with 0.5 A @ 30 V DC

Connection data

Connection method	Screw connection
Conductor cross section solid min.	0.2 mm²
Conductor cross section solid max.	2.5 mm²

Wireless module - RAD-900-IFS - 2901540

Technical data

Connection data

Conductor cross section flexible min.	0.2 mm²
Conductor cross section flexible max.	2.5 mm²
Conductor cross section AWG min.	24
Conductor cross section AWG max.	14
Stripping length	7 mm
Tightening torque	0.6 Nm
Screw thread	M3

Status indicator

Status display	Green LED (supply voltage, PWR)
	Green LED (bus communication, DAT)
	Red LED (periphery error, ERR)
	3 x green, 1 x yellow LED (LED bar graph receive quality, RSSI)
	Green LED (receive data, RX)
	Green LED (transmit data, TX)

Approvals and conformance

Conformance	FCC Directive, Part 15.247
UL, USA / Canada	Class I, Div. 2, Groups A, B, C, D
Standards/regulations	EN 300328
	EN 61000-6-2
	EN 61000-6-4
	EN 50371
	EN 60950-1

Standards and Regulations

Electromagnetic compatibility	Conformance with EMC Directive 2004/108/EC
Standards/regulations	EN 300328
	EN 61000-6-2
	EN 61000-6-4
	EN 50371
	EN 60950-1
Shock	16g, 11 ms
Flammability rating according to UL 94	V0
Interface description	Trusted Wireless
Security	128-bit data encryption
Vibration (operation)	in accordance with IEC 60068-2-6: 5g, 10 Hz ... 150 Hz
Conformance	FCC Directive, Part 15.247
	ISC Directive RSS 210

Wireless module - RAD-900-IFS - 2901540

Technical data

Standards and Regulations

UL, USA	Class I, Zone 2, AEx nA nC IIC T4
UL, USA / Canada	Class I, Div. 2, Groups A, B, C, D
UL, Canada	Class I, Zone 2, Ex nA nC nL IIC T4 Gc X
CSA	CSA C22.2

Classifications

eCl@ss

eCl@ss 4.0	27230207
eCl@ss 4.1	27230207
eCl@ss 5.0	27230207
eCl@ss 5.1	27242208
eCl@ss 6.0	27242208
eCl@ss 7.0	27242208

ETIM

ETIM 3.0	EC001423
ETIM 4.0	EC000310
ETIM 5.0	EC000310

UNSPSC

UNSPSC 6.01	30211506
UNSPSC 7.0901	43223108
UNSPSC 11	39121008
UNSPSC 12.01	43223108
UNSPSC 13.2	43223108

Approvals

Approvals

Approvals

UL Listed / cUL Listed / cULus Listed

Ex Approvals

UL Listed / cUL Listed / cULus Listed

Wireless module - RAD-900-IFS - 2901540

Approvals

Approvals submitted

Approval details

UL Listed

cUL Listed

cULus Listed

Drawings

Block diagram

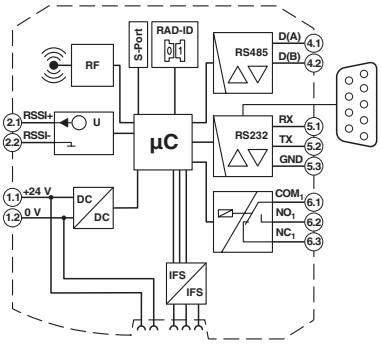

Dimensional drawing

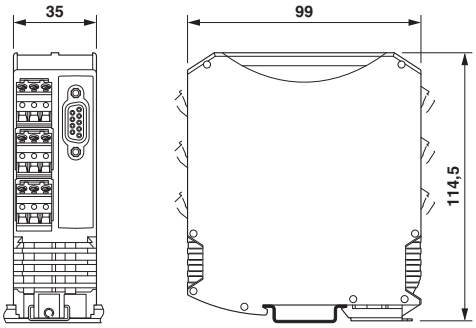

Phoenix Contact 2015 © - all rights reserved
http://www.phoenixcontact.com

BOM #9

I/O extension module - RAD-AI4-IFS - 2901537

Please be informed that the data shown in this PDF Document is generated from our Online Catalog. Please find the complete data in the user's documentation. Our General Terms of Use for Downloads are valid
(http://phoenixcontact.com/download)

Analog extension module with 4 analog current inputs (0/4 mA ... 20 mA), with screw connection, incl. DIN rail connector

Product Features

- Channel-to-channel electrical isolation
- Extended temperature range, -40°C ... +70°C
- Easy module replacement even during operation (hot swap)
- Suitable for ATEX zone 2
- Easy startup via thumbwheel

Key Commercial Data

Packing unit	1 pc
Weight per Piece (excluding packing)	220.0 g
Custom tariff number	85389091
Country of origin	Germany

Technical data

Note

Utilization restriction	EMC: class A product, see manufacturer's declaration in the download area

Dimensions

Width	17.5 mm
Height	99 mm
Depth	114.5 mm

Ambient conditions

I/O extension module - RAD-AI4-IFS - 2901537

Technical data

Ambient conditions

Degree of protection	IP20
Ambient temperature (operation)	-40 °C ... 70 °C (>55°C derating)
	-40 °F ... 158 °F (>131°F derating)
Ambient temperature (storage/transport)	-40 °C ... 85 °C
	-40 °F ... 185 °F
Permissible humidity (operation)	20 % ... 85 %
Permissible humidity (storage/transport)	20 % ... 85 %
Altitude	2000 m
Vibration (operation)	in accordance with IEC 60068-2-6: 5g, 10 Hz ... 150 Hz
Shock	16g, 11 ms

General

Overvoltage category	II
Mounting position	any
Assembly instructions	on standard DIN rail NS 35 in accordance with EN 60715
Pollution degree	2
Housing material	PA 6.6-FR
Flammability rating according to UL 94	V0
MTTF	771 Years (Telcordia standard, 25°C temperature, 21% operating cycle (5 days a week, 8 hours a day))
	351 Years (Telcordia standard, 40°C temperature, 34.25% operating cycle (5 days a week, 12 hours a day))
	136 Years (Telcordia standard, temperature 40 °C, operating cycle 100 % (7 days a week, 24 hours a day))

Supply

Supply voltage range	19.2 V DC ... 30.5 V DC (TBUS)
Max. current consumption	≤ 120 mA (At 24 V DC, at 25°C)
Transient surge protection	Yes

Analog inputs

Number of inputs	4
Current input signal	0 mA ... 20 mA (can be set via DIP switches)
	4 mA ... 20 mA (can be set via DIP switches)
Max. current input signal	22 mA
Input resistance current input	< 70 Ω
Precision	≤ 0.02 % (at 25 °C)
Temperature coefficient, typical	0.0025 %/K (at -40 °C ... +70 °C)
Supply voltage	≥ 12 V DC (For passive sensors (via terminal PWR1, +I1))
Resolution	16 (Bit)

I/O extension module - RAD-AI4-IFS - 2901537

Technical data

Analog inputs

Protective circuit	Overload protection, short-circuit protection

Electrical isolation

Analog I/O	50 V (Rated insulation voltage (in each case between the TBUS analog outputs / supply, reinforced insulation according to EN 61010))

Test voltage

Analog I/O	1.5 kV AC (50 Hz, 1 min.)

Connection data

Connection method	Screw connection
Conductor cross section solid min.	0.2 mm²
Conductor cross section solid max.	2.5 mm²
Conductor cross section flexible min.	0.2 mm²
Conductor cross section flexible max.	2.5 mm²
Conductor cross section AWG min.	24
Conductor cross section AWG max.	14
Stripping length	7 mm
Tightening torque	0.6 Nm
Screw thread	M3

Status indicator

Status display	Green LED (supply voltage, PWR)
	Green LED (bus communication, DAT)
	Red LED (periphery error, ERR)

Approvals and conformance

Conformance	CE-compliant
IECEx	Ex nA IIC T4 Gc
UL, USA / Canada	UL 508 Listed
Standard designation	EMC Directive 2004/108/EC
Standards/regulations	EN 61000-6-2
Standard designation	EMC Directive 2004/108/EC
Standards/regulations	EN 61000-6-4
Standard designation	Ex Directive (ATEX)
Standards/regulations	EN 60079-0
Standard designation	Ex Directive (ATEX)
Standards/regulations	EN-60079-15

Standards and Regulations

Electromagnetic compatibility	Conformance with EMC Directive 2004/108/EC

I/O extension module - RAD-AI4-IFS - 2901537

Technical data

Standards and Regulations

Standard designation	EMC Directive 2004/108/EC
Standards/regulations	EN 61000-6-2
Standard designation	EMC Directive 2004/108/EC
Standards/regulations	EN 61000-6-4
Standard designation	Ex Directive (ATEX)
Standards/regulations	EN 60079-0
Standard designation	Ex Directive (ATEX)
Standards/regulations	EN-60079-15
Shock	16g, 11 ms
Noise emission	EN 61000-6-4
Noise immunity	EN 61000-6-2
Flammability rating according to UL 94	V0
Vibration (operation)	in accordance with IEC 60068-2-6: 5g, 10 Hz ... 150 Hz
Conformance	CE-compliant
IECEx	Ex nA IIC T4 Gc
UL, USA / Canada	UL 508 Listed
	Class I, Div. 2, Groups A, B, C, D T4A
	Class I, Zone 2, IIC T4

Classifications

eCl@ss

eCl@ss 4.0	27230207
eCl@ss 4.1	27230207
eCl@ss 5.0	27230207
eCl@ss 5.1	27242208
eCl@ss 6.0	27242208
eCl@ss 7.0	27242208
eCl@ss 8.0	27242601

ETIM

ETIM 3.0	EC001423
ETIM 4.0	EC000310
ETIM 5.0	EC001596

UNSPSC

UNSPSC 6.01	30211506
UNSPSC 7.0901	43223108

I/O extension module - RAD-AI4-IFS - 2901537

Classifications

UNSPSC

UNSPSC 11	39121008
UNSPSC 12.01	43223108
UNSPSC 13.2	43223108

Approvals

Approvals

Approvals

UL Listed / cUL Listed / EAC / cULus Listed

Ex Approvals

ATEX / IECEx / UL Listed / cUL Listed / cULus Listed

Approvals submitted

Approval details

UL Listed

cUL Listed

EAC

cULus Listed

Drawings

I/O extension module - RAD-AI4-IFS - 2901537

Schematic diagram

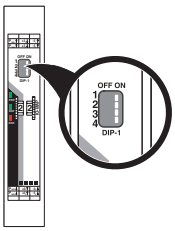

DIP switches

Schematic diagram

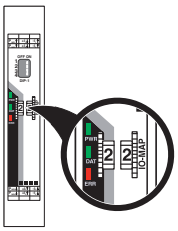

Thumb wheel

Block diagram

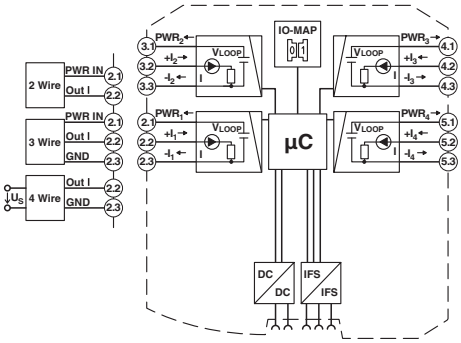

Functional drawing

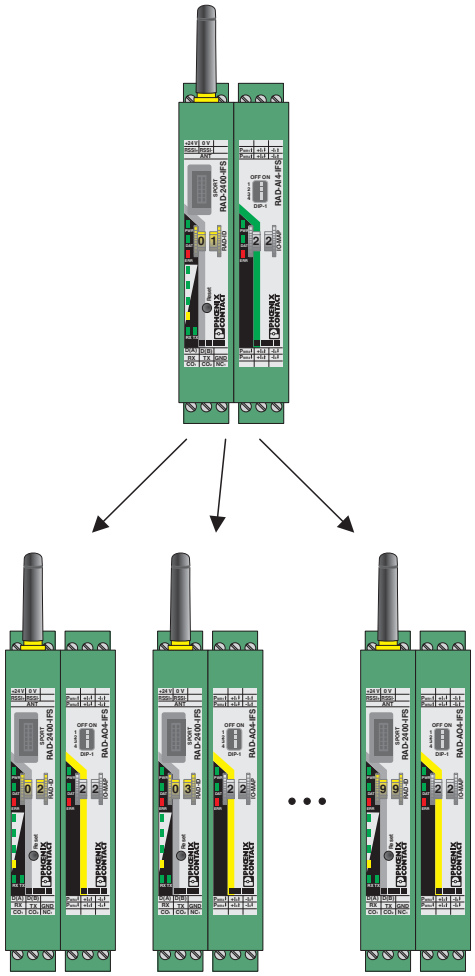

Assignment of analog inputs and analog outputs

I/O extension module - RAD-AI4-IFS - 2901537

Dimensional drawing

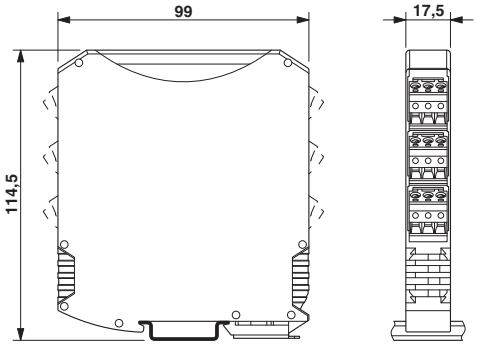

Schematic diagram

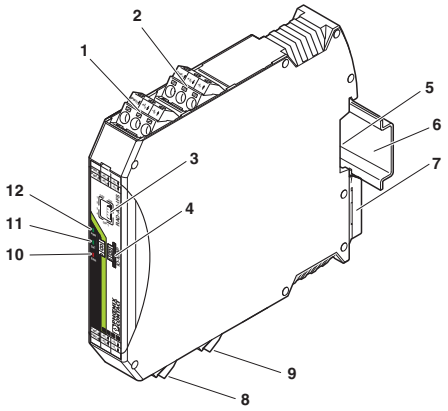

Function elements

I/O extension module - RAD-AI4-IFS - 2901537

Application drawing

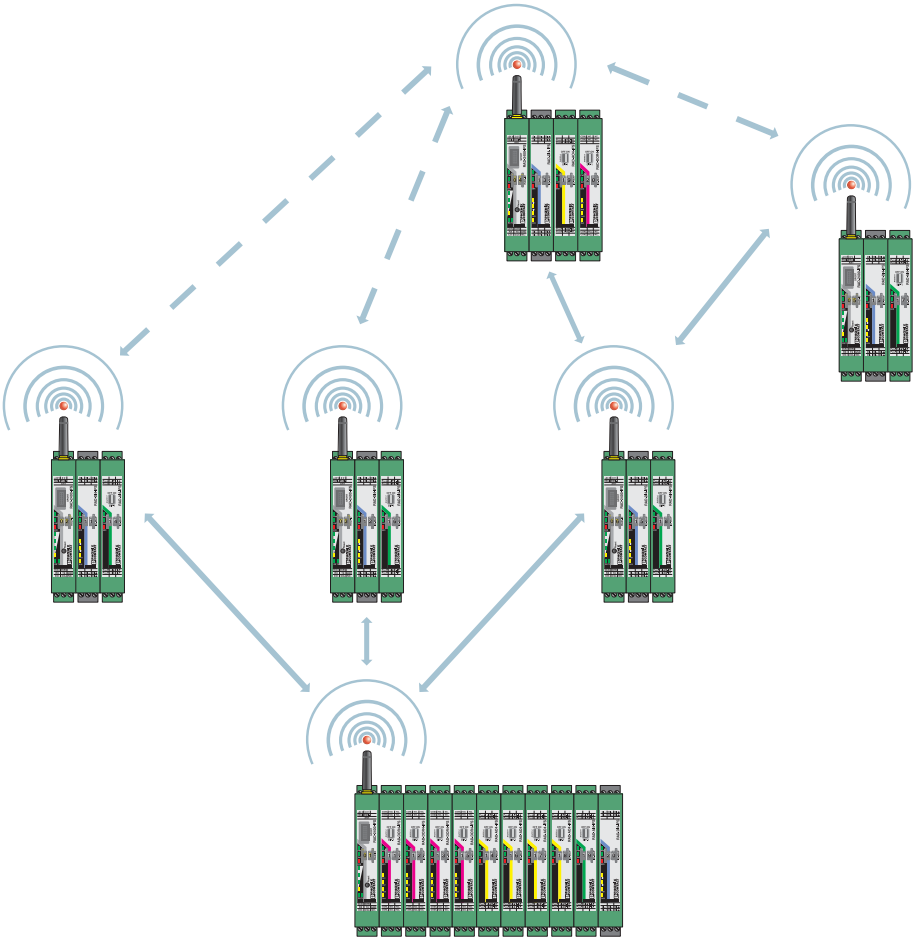

Wireless module in I/O data mode

I/O extension module - RAD-AI4-IFS - 2901537

Application drawing

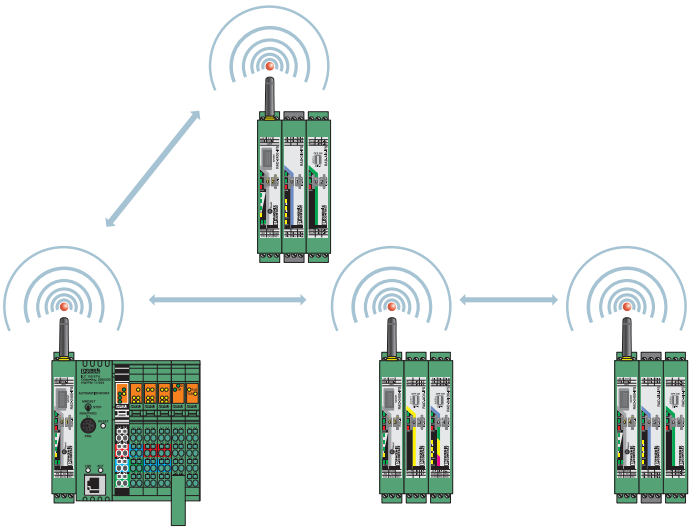

Wireless module in PLC/Modbus RTU mode

Phoenix Contact 2015 © - all rights reserved
http://www.phoenixcontact.com

BOM #10

Product: 1492-H5

Description: 1492-H Finger-Safe Terminal Blocks

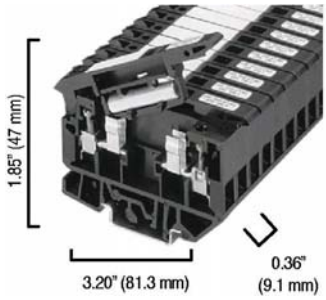

Representative Photo Only (actual product may vary based on configuration selections)

BASE DATA	
Electrical Standards	UL
Type of Device	Finger-Safe Terminal Block
Base Block Type	Single Circuit Fuse Block

DETAIL DATA	
Features	LED Blown Fuse Indicator
Wire Range	#30 - #12 AWG
Color	Black (Standard)
Bulk Pack	No Bulk Pack (Single Block)

CERTIFICATIONS AND APPROVALS	
UR	UL 486E, UL 1059; Reference File: E40735
CSA	CSA C22.2 No. 65, No. 158; On Website, Name: Rockwell, Keyword Search: 1492
IEC	EN 60947-1, EN 60947-7-1(Feed-Through), -2(Ground), -3(Fuse)
Short Circuit Current Rating	This terminal block carries a minimum of 10kA SCCR rating for all protection methods. Please see the table for other possible elevated ratings.
For CSA Certifications:	http://directories.csa-international.org/directorymain.asp
For UL Certifications Directory:	http://database.ul.com/cgi-bin/XYV/template/LISEXT/1FRAME/index.htm

BOM #11

Spring-Clamp Connection Terminal Blocks

Plug-in Style Blocks (Cat. Nos. 1492-L3P, -LDG3P) and Analog Loop Control Block (Cat. No. 1492-LDAG3)

	1492-L3P			1492-LDG3P			1492-LDAG3		
Dimensions are not intended to be used for manufacturing purposes. **Note:** Height dimension is measured from top of rail to top of terminal block.	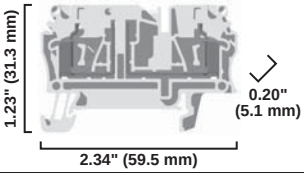			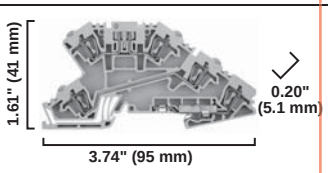					
Specifications	*Single Circuit Plug-In Component Block for a Variety of Components*			*Terminal Block with slot for Plug-In Component, Feed-Through Circuit and 1 Ground Connection*			*Analog Loop Control Terminal Block with 2 Feed-Through Circuits and 1 Ground Connection*		
Certifications	UL	CSA	IEC	UL	CSA	IEC	UL	CSA	IEC
Voltage Rating	600V AC/DC		500V AC/DC	300V AC/DC		250V AC/DC	300V AC/DC		250V AC/DC
Maximum Current	20 A		24 A	10 A		20 A	10 A		24 A
Wire Range (Rated Cross Section)	#30…12 AWG		4 mm²	#26…12 AWG		2.5 mm²	#26…12 AWG		2.5 mm²
Wire Strip Length	0.39 in. (10 mm)			0.31 in. (8 mm)			0.31 in. (8 mm)		
Density	59 pcs/f (/196 pcs/m)			59 pcs/ft (196 pcs/m)			59 pcs/ft (196 pcs/m)		
Housing Temperature Range	–58…+248 °F (–50…+120 °C)			–58…+248 °F (–50…+120 °C)			–58…+248 °F (–50…+120 °C)		
Terminal Blocks	**Cat. No.**		**Pkg Qty.**	**Cat. No.**		**Pkg Qty.**	**Cat. No.**		**Pkg Qty.**
Color Grey	**1492-L3P**		25	**1492-L**		25	**1492-LDAG3**		25
Accessories	**Cat. No.**		**Pkg Qty.**	**Cat. No.**		**Pkg Qty.**	**Cat. No.**		**Pkg Qty.**
Mounting Rails 1 m Symmetrical DIN (Steel)	**199-DR1**		10	**199-DR1**		10	**199-DR1**		10
1 m Symmetrical DIN (Aluminum)	**1492-DR5**		10	**1492-DR5**		10	**1492-DR5**		10
1 m Hi-Rise Symmetrical DIN (Aluminum)	**1492-DR6**		2	**149**		2	**1492-DR6**		2
1 m Angled Hi-Rise Sym. DIN (Steel)	**1492-DR7**		2	**1492-DR7**		2	**1492-DR7**		2
End Barrier	**1492-EBL3**		50	**1492-EBLDAG3**		20	**1492-EBLDAG3**		20
End Anchors and Retainers Screwless End Retainer	**1492-ERL35**		20	**1492-ERL35**		20	**1492-ERL35**		20
DIN Rail — Normal Duty	**1492-EAJ35**		100	**1492-EAJ35**		100	**1492-EAJ35**		100
DIN Rail — Heavy Duty	**1492-EAHJ35**		50	**1492-EAHJ35**		50	**1492-EAHJ35**		50
Jumpers Plug-In Center Jumper — 50-pole	**1492-CJK5-50**		10	**1492-CJLJ5-50**		10	**1492-CJLJ5-50**		10
Plug-In Center Jumper — 10-pole	**1492-CJK5-10**		20	**1492-CJLJ5-10**		20	**1492-CJLJ5-10**		20
Plug-In Center Jumper — 9-pole	**1492-CJK5-9**		20	**1492-CJLJ5-9**		20	**1492-CJLJ5-9**		20
Plug-In Center Jumper — 8-pole	**1492-CJK5-8**		20	**1492-CJLJ5-8**		20	**1492-CJLJ5-8**		20
Plug-In Center Jumper — 7-pole	**1492-CJK5-7**		20	**1492-CJLJ5-7**		20	**1492-CJLJ5-7**		20
Plug-In Center Jumper — 6-pole	**1492-CJK5-6**		20	**1492-CJLJ5-6**		20	**1492-CJLJ5-6**		20
Plug-In Center Jumper — 5-pole	**1492-CJK5-5**		20	**1492-CJLJ5-5**		20	**1492-CJLJ5-5**		20
Plug-In Center Jumper — 4-pole	**1492-CJK5-4**		60	**1492-CJLJ5-4**		60	**1492-CJLJ5-4**		60
Plug-In Center Jumper — 3-pole	**1492-CJK5-3**		60	**1492-CJLJ5-3**		60	**1492-CJLJ5-3**		60
Plug-In Center Jumper — 2-pole	**1492-CJK5-2**		60	**1492-CJLJ5-2**		60	**1492-CJLJ5-2**		60
Other Accessories Disconnect Plug	**1492-DPL**		50	**1492-DPL**		50	—		—
Component Plug	**1492-CPL**		50	**1492-CPL**		50	—		—
Fuse Plug Without Blown Fuse Indicator	**1492-FPK2**		20	**1492-FPK2**		20	—		—
10…36V Blown Fuse Indicator	**1492-FPK224**		20	**1492-FPK224**		20	—		—
35…70V Blown Fuse Indicator	**1492-FPK248**		20	**1492-FPK248**		20	—		—
60…150V Blown Fuse Indicator	**1492-FPK2120**		20	**1492-FPK2120**		20	—		—
140…250V Blown Fuse Indicator	**1492-FPK2250**		20	**1492-FPK2250**		20	—		—
Reducing Sleeves 28…24 AWG (0.13…0.2 mm²) White	1492-PSL3-2		100	—		—	—		—
Reducing Sleeves 22…20 AWG (0.25…0.5 mm²) Grey	**1492-PSL3-5**		100	—		—	—		—
Reducing Sleeves 18 AWG (0.75…1.0 mm²) Dark Grey	**1492-PSL3-10**		100	—		—	—		—
Test Plug	**1492-TPL5**		25	**1492-TP23**		20	—		—
Electrical Warning Plate	**1492-EWPL5**		20	—		—	—		—
Group Marking Carrier	**1492-GM35**		25	**1492-GM35**		25	**1492-GM35**		25
Marking Systems Snap-In Marker Cards	**1492-M5X10** (144/card)		5	**1492-M5X10** (144/card)		5	**1492-M5X10** (144/card)		5
Snap-In Marker Cards	**1492-M5X5** (200/card)		5	**1492-M5X5** (200/card)		5	**1492-M5X5** (200/card)		5

BOM #13

BOM #16

Product: 1492-J3

Description: 1492 IEC Screw Terminal Blocks

BOM #14

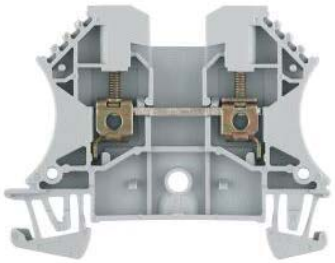

Representative Photo Only (actual product may vary based on configuration selections)

BLOCK STYLE	
Base Block Style	Standard Feed-Through Blocks
BASE DATA	
Base Block Type	One-Circuit Feed-Through Block
DETAIL DATA	
Features	Standard Feedthrough
Maximum Wire Size & Rating	UL: 30-12 AWG (25A @600V AC/DC)\nCSA: 26-12 AWG (20A @600V AC/DC)\nIEC: 2.5mm² (24A @800V AC/DC)\nEEx e II: 2.5mm²/20-14 AWG (21A @ 550V AC/DC)
Color	Gray (Standard)
CERTIFICATIONS AND APPROVALS	
UR	UL 486E, UL 1059; Reference File: E40735, E187022
CSA	CSA C22.2 No. 65, No. 158; On Website, Name: Rockwell, Keyword Search: 1492
IEC	EN 60947-1, EN 60947-7-1(Feed-Through), -2(Ground), -3(Fuse)
ATEX	http://www.rockwellautomation.com/products/certification/ex/excert.html
Short Circuit Current Rating	This terminal block carries a minimum of 10kA SCCR rating for all protection methods. Please see the table for other possible elevated ratings.
For CSA Certifications:	http://directories.csa-international.org/directorymain.asp
For UL Certifications Directory:	http://database.ul.com/cgi-bin/XYV/template/LISEXT/1FRAME/index.htm

McCROMETER

The Flow Measurement Specialists

ACCURACY TEST

This flow meter has been wet flow calibrated in an NIST traceable flow laboratory per the manufacturer's specification for the model and size listed below. The final reading on mechanical totalizers is the result of final form testing (totalizers with electronic displays are reset to zero after testing.)

Totalizer Reading: 18350

METER SIZE: 10"

MODEL: MLI7-10

Cal. for pipe ID: 10.22

Serial No.: 20140402

Date: 2-17-14

Form 507

CERTIFIED TEST REPORT

CUSTOMER: MCCALLS METER SALES & SERVICE

MODEL NO: MLI1-10

METER SERIAL NO: 20140402

CONFIGURATION

METER INSIDE DIAMETER: 10.22

DIAL: GAL X 1000 2000 GPM

GEARS: 25 / 36

TOTALIZER GEARS: 24L / 36L

ACTUAL METER INDEX: 0.6189

TEST FACILITY: Volumetric

CALIBRATION DATA

	FLOW RATE GPM	% ACCURACY
1	2036.67	99.46
2	1036.40	99.54
3	263.30	100.38

TEST DATE: 2/17/2014

CERTIFIED BY: Paul Hobbs

PRINT DATE: 2/17/2014

This calibration was performed on a primary or secondary test facility, traceable to the National Institute of Standards and Technology, USA. The estimated flow measurement uncertainty of the calibration facilities are:
Primary +/- 0.15% Secondary +/- 0.5%

McCROMETER
3255 WEST STETSON AVENUE
HEMET, CA 92545 USA
PHONE (951) 652-6811 / FAX (951) 652-3078
WEB SITE: http://www.mccrometer.com E-MAIL: customerservice@mccrometer.com

20140402

Printed by Don Hawley
2/17/2014 5:31:46 PM
Version 1.0 (3/9/2007)

30119-04 Rev. 3.1/03-13

WATER SPECIALTIES™
PROPELLER METER

2"-20"
MAIN LINE METERS
MODELS
ML04, ML08, ML12, ML16, ML20, ML22, MLI1

OPERATION AND MAINTENANCE MANUAL
PARTS LIST

FEATURING:
*MODEL CN06-2 INDICATOR-TOTALIZER
*CERAMIC BEARING CARTRIDGE PROPELLER
* ONE PIECE SEPARATOR/SPINDLE AND THREADED REVERSE THRUST BEARING CARTRIDGE

McCROMETER
3255 WEST STETSON AVENUE
HEMET, CALIFORNIA 92545 U.S.A.

PHONE: 951-652-6811
FAX: 951-652-3078
VISIT OUR WEBSITE: www.mccrometer.com

APPENDIX K

Contingency Plan

THIS PAGE INTENTIONALLY LEFT BLANK

CONTINGENCY PLAN

This Contingency Plan has been developed for the Kirtland Bulk Fuels Facility (BFF) Groundwater Treatment System (GWTS) located at Kirtland Air Force Base (AFB), New Mexico to ensure that an accidental or unplanned discharge from the GWTS does not result in adverse impacts to the human health or the environment. The GWTS is treating nonhazardous, low levels of ethylene dibromide (EDB) from a historic leak of aviation gasoline and jet fuel in groundwater which is conveyed to the GWTS from the extraction well network off-base.

K.1 GWTS Preventative Measures

Equipment and components of the GWTS were designed and constructed to include leak-prevention, secondary containment, remote system access, and automatic shutdowns to reduce the likelihood of unauthorized discharges. Operation and maintenance of these components are briefly described below. System disruption will be recorded, if the system disrupted longer than 24 hours reporting will be via email to both New Mexico Environment Department (NMED) Hazardous Waste Bureau (HWB) and Groundwater Quality Bureau (GWQB). Depending on alarm condition and if a release occurred Notification Procedures (Section K.6) will be followed which is in accordance Section 1.27 of the Hazardous Waste Treatment Facility Operating Permit (HWTF Permit No. NM9570024423; referred to as the RCRA Permit) and Discharge Permit (DP-1839). This Contingency Plan will be available onsite during system operation and will include equipment maintenance and shutdown procedures.

K.1.1 Influent Pipeline and Leak Monitoring

To ensure that contaminated groundwater is not discharged on route to the GWTS, leak-detection monitoring is installed in the interstitial space between the inner and outer pipes in the well vaults of each of the extraction wells and at junction valve vaults where the influent pipelines enter Kirtland AFB. These vaults are low points in the double-walled influent pipe system and an inner line leak anywhere between the vaults will gravity drain inside the outer pipe to one of the two locations, setting off the alarm. The pipelines were leak-tested prior to initiating service and will be retested following any repairs (planned or unplanned).

If there is a leak in the primary influent pipeline, the secondary pipe will contain the untreated water and the interstitial alarms in the vaults will automatically shut down the extraction pumps. The Operator is notified via the control system of the alarms and the extraction pump shuts down. Following notification, the faulty components will be identified, isolated, and repaired, as needed.

Breaches of the conveyance lines by third parties is administratively controlled via the NM811 participation off-base and the excavation permit review process on-base. All well and conveyance line locations are registered in the NM811 geographic information system, and tickets are generated for line locates for any excavation near these structures. The Air Force has a subcontractor that responds to all off-base tickets generated by the NM811 system. On base, the excavation permit review process requires all excavation be approved by Civil Engineering and permits will not be issued if the excavation will impact the subsurface conveyance lines and/or vaults on base.

Any breach of either the primary and secondary conveyance lines that releases water into the vaults also triggers an alarm and notifies the Operator. Untreated water will be removed from the vaults by vacuum truck and will be batched and filtered into the pre-treatment tank(s), and subsequently treated through the GWTS. Emergency response subcontracts are maintained by

the Air Force for repairs and remediation should the administrative controls fail and untreated water is released to the environment.

K.1.2 GWTS Secondary Containment

The GWTS building has a collection sump in the center of the building with a sloping floor and curbs such that the floor provides additional secondary containment. The secondary containment volume is over 7,300 gallons within the GWTS and is sufficient to contain a single failure of the largest volume tanks (6000-gallon pre-treatment and treated water tanks). The secondary containment areas and volume calculations are provided in this appendix. A sump pump located in the sump in the center of the building pumps the collected water back into the pre-treatment tank(s) whether or not the release water is treated or untreated.

K.1.3 Level Switches for Tanks

The pre-treatment tank(s) and the post-treatment tank(s) are fitted with back-up, high-level switches that shut down the system, if necessary. The high-level alarms are set at 7.5 feet above the tank bottom (height of tank is 10 feet). The Operator is notified via the control system if a high level in the tank causes the system to shut down. Response times will vary depending on the alarm conditions. During the normal working hours, response times can be within an hour to prevent unauthorized discharges. After hours, the alarms are evaluated to see if the system can be re-started remotely. In an emergency, Operators will be dispatched to the plant.

K.1.4 Telemetry System and Control Panel

The GWTS is designed and instrumented to efficiently operate 24-hours per day with minimal Operator attention. A control system and Operator interface panel is installed to allow remote control of the GWTS and the extraction well network. The control system includes telemetry and web access to alert operators of off-hour alarm conditions. Subcontractor staff are scheduled for on-call responses on weekends and after hours for any emergency response if alarm conditions warrant. Once staff have responded to the alarm condition and depending on the nature of the release, the appropriate individuals will be notified such as the Emergency Coordinator (EC), Air Force management, and/or NMED HWB and GWQB within the appropriate time period, see Section K.5.2 for description.

K.1.5 Granular Activated Carbon Vessels

The granular activated carbon (GAC) vessels are arranged in series to provide the contact time required for EDB removal as described in Section 4 of Appendix D in the Operations and Maintenance Plan. Monthly groundwater samples will be collected in order to monitor for contaminant breakthrough (defined as contaminant removal of equal to 90% of the discharge limits). If contaminant breakthrough occurs in the lead GAC vessel, the vessels are switched in the lead-lag position and GAC change-out is scheduled. Sampling frequency is increased for any GWTS system change (i.e., new wells added to system) as described in Section 4.3 of the Operation and Maintenance Plan and Appendix L.

K.1.6 Effluent Monitoring Procedures

The treated effluent must comply with the water quality standards established in discharge permit. The treated and untreated groundwater will be sampled routinely for all of these compounds as described in the Sampling and Analysis Plan provided in Appendix L of this Operations and Maintenance Plan. If the GWTS operations cannot achieve the approved permit effluent concentration requirements, it will be shut-down until system modifications can be approved and implemented.

K.2 Notification Procedures

As soon as the Kirtland AFB has knowledge that effluent water quality exceeds the discharge criteria for one or more of the contaminants listed in approved permits, the NMED HWB must be notified in writing within 24 hours of discovery in accordance with Section 1.27 of the RCRA Permit. Any actions that can be taken to correct the problem and achieve the required effluent concentrations will be performed immediately. Following plant operational adjustments, the effluent groundwater will be re-tested, and the monitoring frequency will be increased as required in discharge permit. After 4 consecutive weeks of analytical results below the standards in 20.6.2.3103 NMAC, monitoring will return to a monthly frequency. If the required actions are considered to be outside the scope of work for plant operations, then the system will be shut down pending submittal of a corrective action plan to the NMED.

K.2.1 Major Incidents or Emergencies

In the case of major incidents or emergencies (e.g. fire, uncontrolled release, etc.), the EC shall notify:

- Kirtland AFB Fire Department at (505)-853-9111
- Kirtland AFB Command Post (KCP) at (505) 846-6432.

A complete list of emergency contacts can be found in Table K-1 below. The KCP shall assume primary responsibility for response coordination in the case of such major incidents or emergencies or delegate that responsibility to the Kirtland AFB Fire Chief. Once the KCP or Kirtland AFB Fire Chief completes its response, the EC shall assume responsibility to ensure compliance with all the provisions of this Contingency Plan, including post-emergency inspections and reporting.

TABLE K-1
GWTS Emergency Contact List

Affiliation	Contact Name	Phone
Emergency Coordinator Environmental Restoration	Wayne Bitner	(505) 853-3484
Base Civil Engineering - Alternate Emergency Coordinator	Gregory S. Capra	(505) 853-2043
Kirtland Fire Department	Fire Department Chief	(505) 853-9111
Environmental Management Section, Chief Compliance Coordinator	Melissa Clark	(505) 235-5641
EA Engineering	Alex Spiller	(386) 793-3415
EA Engineering	Devon Jercinovic	(505) 401-1181

K.3 Emergency Coordinator

The EC for the GWTS is the Chief Environmental Restoration (Table K-1) and the EC shall be on site during emergency response measures. The EC shall be thoroughly familiar with this Contingency Plan and the operations and activities conducted at the GWTS. If the Base Civil Engineer becomes the EC (because the primary EC is not available), the Base Civil Engineer shall be present at the GWTS for the entire duration of the emergency response. The EC shall ensure that personnel assigned to the GWTS are trained in the location and use of eyewash solutions, fire extinguishers, and emergency protective clothing; in emergency procedures; and in evacuation procedures before starting any emergency response.

The EC has three primary responsibilities. They are:

1. Assess the situation. By observing the scene, interviewing personnel, and/or reviewing records, the EC shall gather information relevant to the response, such as the type of event (e.g. fire, uncontrolled release, etc.), quantity and type of released material, and actual or potential hazards to human health or the environment.
2. Protect personnel. The EC shall take reasonable measures to ensure the safety of personnel, such as accounting for GWTS personnel, attending to injuries, or coordinating the evacuation of GWTS personnel, if necessary. If evacuation is indicated for personnel, the KCP shall be informed.
3. Contain or mitigate the hazards. The EC shall take reasonable measures to ensure that fires, explosions, or releases do not occur, recur, or spread.

K.4 Distribution of Contingency Plan

To assure proper implementation, this Contingency Plan shall be reviewed and understood by all personnel involved in the management of the GWTS and by all personnel required to respond to emergency situations at the GWTS. On-site training of subcontractor personnel will be documented by the subcontractor and be provided to Air Force personnel, if requested. A copy of this Contingency Plan and any subsequent revisions to the plan shall be maintained at the Environmental Management (EM) Branch Office and a current copy shall be maintained at the KCP, and in the GWTS control room. Copies and subsequent revisions shall be distributed to the Kirtland AFB Fire Department, the Albuquerque Fire Department, and NMED in the event that they are called upon to assist with or provide emergency services. The NM811 system includes 24/7 calls to identified subcontractors to initiate a leak response.

K.5 Response Procedures

When the EC is notified of an incident or emergency, he shall first determine the scale of the incident or emergency and decide if the incident or emergency is minor or major. In the case of minor incidents or emergencies, the EC shall coordinate the response. In the case of major incidents, the EC shall relinquish control to the KCP, which may in turn relinquish control to the Kirtland AFB Fire Chief when he arrives to handle the emergency; however, the EC shall remain available to provide technical guidance and information.

If necessary to protect human health, personnel shall evacuate the GWTS during an emergency as described in Section K.9 below. In the event that the EC determines an incident to be minor, a person shall be assigned to stand by at a safe distance with a two-way radio. At the first indication of an escalation in the degree of the incident, the standby person shall be instructed to notify the KCP. The EC or EM Branch Chief of Compliance shall notify the National Response Center (1-800-424-8802 or current phone number) and the Department with the details of the incident or emergency as soon as possible after being notified of the incident or emergency.

After any incident or emergency, the EC shall ensure that emergency equipment are cleaned, waste is properly managed and disposed of, and the GWTS is safe to resume operation. Before operations are resumed, the EC shall contact the EM Branch Chief of Compliance, who shall inform the appropriate agencies. The EC shall also ensure that any required emergency recovery inspections and activities are conducted. The EC shall also be responsible for preparing any required post-emergency or post-incident reports.

K.6 Spills and Notification Procedures

The first priority in dealing with any spill is protection of personnel. If any treated or untreated groundwater is spilled during GWTS operation, the GWTS will be immediately shut down if the source of the spill is from GWTS process operations, or if the source of the spill cannot be readily identified. The GWTS Operator shall notify the EC if appropriate personal protective equipment (PPE) in accordance with HAZWOPER shall be donned based on the nature of the release (treated versus untreated groundwater). The spilled groundwater shall be contained, removed, and managed appropriately. The incident, including details of the spill and cleanup, shall be reported to the EC.

If a release, leak, or other discharge occurs during the operation of the GWTS that is not authorized under an approved permit or part of normal plant operations (discharge to sumps, maintenance operations), corrective measures will be taken to mitigate damage from the unauthorized discharge. The GWTS will be immediately shutdown, and the source and amount of release will be determined. If the release or leak is confined within the secondary containment area and a pre-treatment tank(s) is available, spill-response equipment will be used pump the water back through the GWTS. If the release or leak results in a release to the environment (outside the secondary containment area), the system will be immediately shutdown, and NMED will be notified. Notification procedures and corrective actions in accordance with Section 1.27 and 1.28 of the RCRA Permit are summarized below.

In the event that a release or unauthorized discharge occurs, the Kirtland AFB Compliance Coordinator will complete the following notifications:

1. NMED will be verbally notified via the Environmental Emergencies hot line (505-827-9329) within 24 hours of discovery with the following information:

   a. Information concerning release of any hazardous waste or constituents that may cause an endangerment to public drinking water supplies; and
   b. Any information about a release or discharge of hazardous waste or hazardous constituent or of a fire or explosion which could threaten the environment or human health including:
      i. A description of the noncompliance and its cause;
      ii. The name, address, and telephone number of the owner, operator, and name of responsible official;
      iii. The name, address, and telephone number of the Facility;
      iv. The period of the occurrence including exact date and time and, if the noncompliance has not been corrected, the anticipated time it is expected to continue;
      v. The name and quantity of materials involved;
      vi. The extent of injuries, if any;
      vii. An assessment of actual or potential hazards to the environment and human health at and outside the Facility, where this is applicable;
      viii. The estimated quantity and disposition of recovered material that resulted from the incident; and
      ix. The steps taken or planned to reduce, eliminate, and prevent recurrence of the noncompliance.

2. Within 5 calendar days of the unauthorized discharge, a written report will be submitted to NMED containing the information provided in 1) above.

Additionally, both NMED HWB and GWQB will be notified by email if the treatment system shuts down for 24 hours or more due to either planned or unplanned shutdowns.

K.7 Personnel Exposure

In the unlikely event of personnel exposure to hazardous constituents in the future (there currently are no hazardous materials stored on site for pre-treatment), including, but not limited to, irritation of the eyes, breathing passages, or skin; difficulty in breathing; and/or nausea, light-headedness, vertigo, or blurred vision, personnel shall immediately take the following measures.

1. Clear the area immediately (if possible) and move to muster area; call 505-853-9111
2. Notify the EC immediately.
3. The EC shall attempt to ascertain what, if any, chemical exposure occurred and what corrective measures are appropriate.
4. Transport the affected person to a medical facility for evaluation.
5. Evacuate and barricade the area to prevent unauthorized entry.

K.8 Explosion and/or Fire

The GWTS has an automated fire suppression system and a fire panel monitored by the Kirtland AFB Fire Department.

K.9 Natural Disasters

After any natural disaster in the vicinity of the GWTS (e.g., earthquake, floods, lightning strike), the EC shall inspect the GWTS for any signs of damage, leakage, and land movement and initiate any necessary corrective measures to rectify potential or actual problems. Inspection findings and corrective measures shall be recorded in the Operating Record.

K.10 Evacuation

Personnel shall evacuate the GWTS upon voice command or by notification over two-way radio or other communication device.

K.10.1 Evacuation Procedure

The following procedure shall be implemented for evacuation:

1. When an evacuation is announced, stop work.
2. Assist injured personnel to evacuate, if possible.
3. Report to the designated muster area outside the GWTS for roll call to be taken by the EC or his designee.
4. Be continually cognizant of wind directions (stay upwind, if possible) and emergency equipment.
5. Do not reenter the affected area until the EC or Kirtland AFB Fire Chief authorizes reentry.

K.10.2 Evacuation Route

The EC shall be responsible for ensuring that all GWTS personnel and site visitors are familiar with evacuation procedures and routes. A map showing the evacuation route is provided as Figure 9-1. The map shall be posted at the GWTS.

K.11 EMERGENCY EQUIPMENT

Emergency equipment shall be available for use at the GWTS. The emergency equipment listed in Table K-2 shall be repaired, replaced, and/or upgraded with functionally equivalent components and equipment, as necessary.

TABLE K-2
Type and Location of Emergency Equipment Available for Use at the GWTS

Emergency Item or Equipment	Description	Location	Contact
Emergency Transporation	Ambulances	Kirtland AFB Fire Department	911 or 846-8069
	Fire Trucks: Fire-fighting vehicles outfitted with equipment for fighting fires and with self-contained breathing apparatuses (SCBA).	Kirtland AFB Fire Department	911 or 846-8069
Medical Supplies	First aid kit	GWTS	EC or EA personnel
	Stretchers/Stokes Litter: Equipment for movement of injured personnel.	Kirtland AFB Fire Department	846-8069
	Blankets: Normal blankets.		
	Medical Kits: Emergency first-aid supplies.		
	Oxygen: Medical grade oxygen in compressed cylinders equipped for personnel use.		
Safety Supplies	Fire Extinguisher (ABC)	GWTS	EC or EA personnel
	Eye Wash Kit		
	Monitoring Instruments		
General Supplies	Hand Tools	GWTS	EC or EA personnel
	Broom(s)		

K.11 POST SPILL PROCEDURES

The recovery procedures that shall be followed after a minor or major incident or emergency at the GWTS are described below.

K.11.1 Post-Emergency Inspections and Activities

The following post-emergency incident inspections and activities shall be conducted:

1. The EC will assure that the time, date, and details of any incident or emergency are noted in the Operating Record in accordance with Section 1.27 of the RCRA Permit.
2. The EC shall inspect the premises for leaks or ruptures of equipment, and shall ensure that all recovered material and waste is managed properly. The results of the inspection shall be recorded in the Operating Record. Only containers made of or lined with materials that will not react with and are otherwise compatible with the waste resulting from cleanup

procedures shall be used.

3. Emergency response equipment at the GWTS shall be carefully inspected and the equipment decontaminated, replaced, or refurbished, if needed. Fire extinguishers shall be checked for adequate charge. PPE shall be checked for contamination. Remedial equipment shall be inspected for contamination and proper operation. The supply of eyewash solution and other expendable items used for first aid or cleanup shall be checked and replaced, as necessary by the GWTS Operator. Any equipment replacements will be noted in the weekly inspection logs.
4. Within 24 hours of an emergency or incident, fire extinguishers shall be replaced or recharged and PPE decontaminated, repaired, or replaced as necessary.
5. Within three days of an emergency or incident, other equipment and structures shall be decontaminated. Decontamination wastes shall be collected and managed appropriately. Appropriate PPE shall be worn during decontamination procedures.
6. Within 30 days of an emergency or incident, other equipment shall be repaired or replaced as necessary.

K.11.2 Post-Emergency or Incident Reports

The following post-emergency or incident reports shall be made:

1. A verbal report of any incident or emergency shall be reported promptly to the EM Branch Chief of Compliance if he was not informed during its occurrence.
2. A written report as described in Section K.6.2.
3. Before operations are resumed at the GWTS, the NMED shall be notified that the GWTS is in compliance with the RCRA Permit and the requirements of this Contingency Plan. The notification shall include that cleanup procedures are completed and that all emergency equipment is cleaned and fit for its intended use.

K.11.3 Emergency/Incident Response Evaluation

The GWTS operations shall be included in the annual evaluations of the Kirtland AFB Facility emergency response plans and for evaluation of the response to any incident or emergency. If these evaluations reveal that changes to the emergency response plans are necessary, they shall be amended by the EC and distributed to the appropriate organizations.

This Contingency Plan shall be reviewed and, if necessary, amended by Kirtland AFB whenever:

1. Applicable regulations are revised.
2. The plan fails in an incident or emergency.
3. The design, construction, operation, and/or maintenance of the GWTS or other circumstances change in a way that materially increases the potential for fires, explosions, or releases of hazardous waste or hazardous constituents, or changes the response necessary in an incident or emergency.
4. The list of emergency equipment changes.
5. Whenever any of the EC contact information in Table K-1 changes, a revised table shall be distributed to all Contingency Plan holders. A copy of the revised table shall also be maintained at the GWTS control room. A revision of Table K-1 constitutes an amendment to this Contingency Plan.

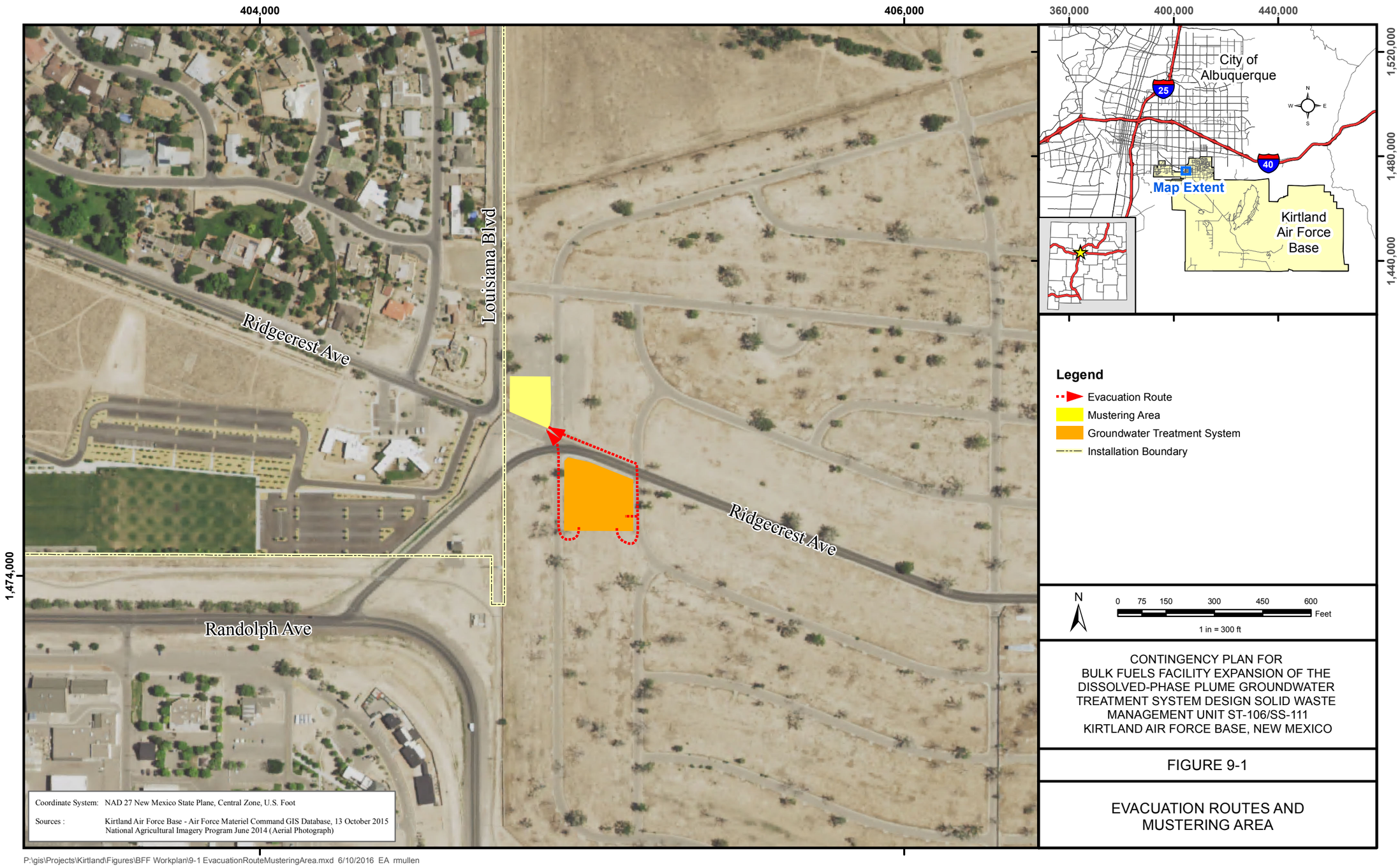

CONTINGENCY PLAN FOR
BULK FUELS FACILITY EXPANSION OF THE
DISSOLVED-PHASE PLUME GROUNDWATER
TREATMENT SYSTEM DESIGN SOLID WASTE
MANAGEMENT UNIT ST-106/SS-111
KIRTLAND AIR FORCE BASE, NEW MEXICO

FIGURE 9-1

EVACUATION ROUTES AND
MUSTERING AREA

P:\gis\Projects\Kirtland\Figures\BFF Workplan\9-1 EvacuationRouteMusteringArea.mxd 6/10/2016 EA rmullen

THIS PAGE INTENTIONALLY LEFT BLANK

GWTS SECONDARY CONTAINMENT CALCULATIONS

THIS PAGE INTENTIONALLY LEFT BLANK

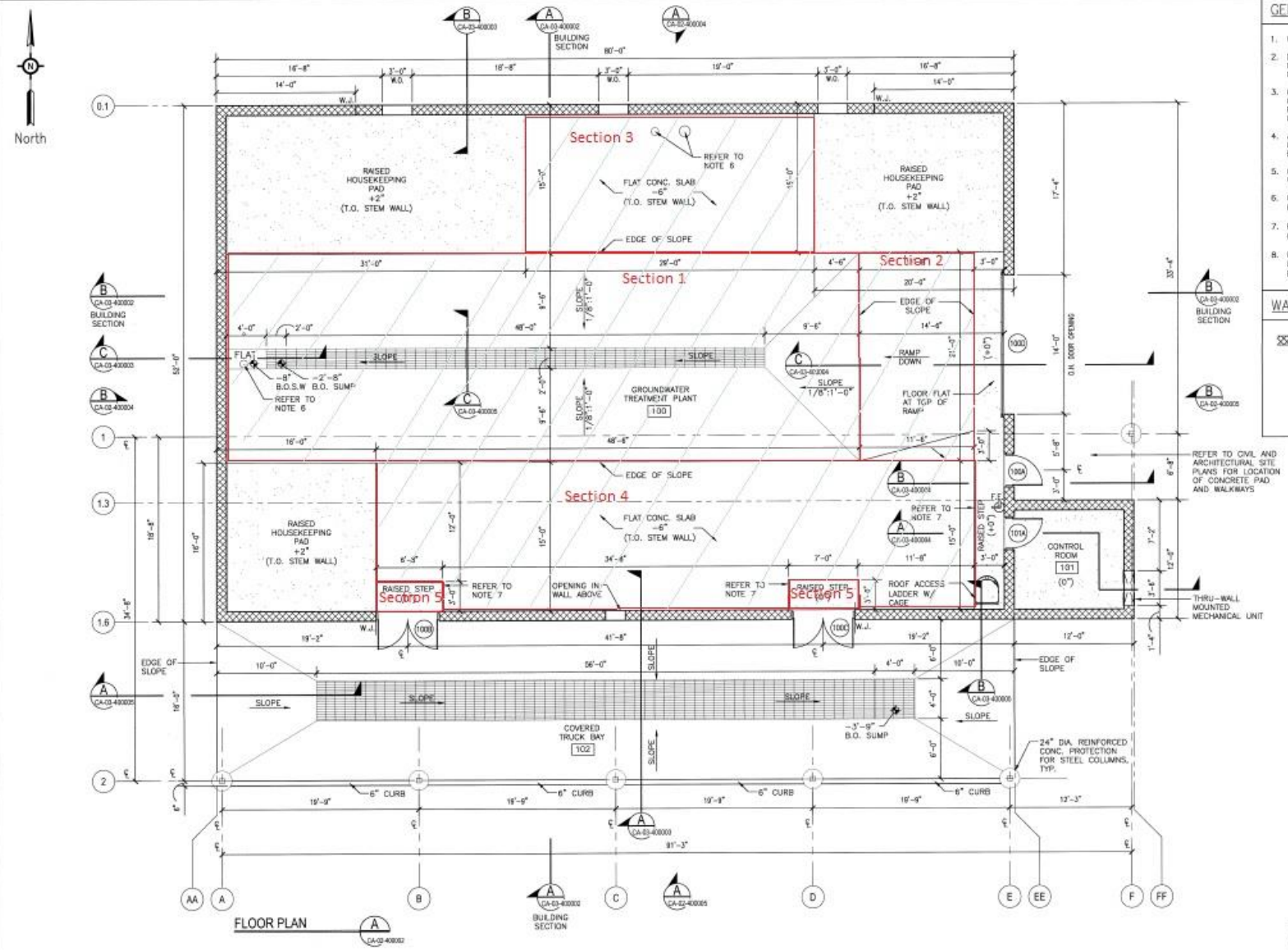

GENERAL NOTES:

1. WORK TO COMPLY WITH ALL GOVERNING AUTHORITIES HAVING JURISDICTION.
2. DO NOT SCALE DRAWINGS, WRITTEN DIMENSIONS PREVAIL. IF DIMENSIONS ARE IN QUESTION, THE CONTRACTOR SHALL BE RESPONSIBLE FOR OBTAINING CLARIFICATION FROM THE ARCHITECT BEFORE CONTINUING WITH CONSTRUCTION.
3. CONTRACTOR SHALL VERIFY ALL DIMENSIONS AND CONDITIONS AT THE JOB SITE PRIOR TO THE START OF ANY WORK. THE CONTRACTOR SHALL BE RESPONSIBLE FOR VERIFYING THE EXISTING CONDITIONS PRIOR TO BIDDING AND SHALL BE FAMILIAR WITH ALL ASPECTS OF THE JOB, INCLUDING SITE UTILITIES.
4. ALL DIMENSIONS ARE TO FACE OF MASONRY OR CONCRETE,EDGE OF WALK OR FACE OF CURB UNLESS NOTED OTHERWISE. FOR FURTHER DIMENSIONING, SEE LARGE SCALE PLANS, SECTIONS, EXTERIOR ELEVATIONS, INTERIOR ELEVATIONS AND DETAILS.
5. CAULK AT JUNCTURE OF INTERIOR FACES OF DOOR FRAMES, VIEW WINDOW FRAMES, EXTERIOR WINDOW FRAMES, ETC. WITH ADJACENT MATERIAL EVEN THOUGH JOINT MAY NOT BE VISIBLE.
6. COORDINATE WITH MECHANICAL AND PROCESS DESIGN, FOR EXACT LOCATION AND SIZE OF PIPE FLOOR PENETRATIONS. REFER TO DETAIL K/140705-001-CA-03-400006.
7. PROVIDE 4" PAINTED (YELLOW) "WARNING STRIPE" AT ALL RAISED STEPS (ON VERTICAL AND HORIZONTAL SURFACES), LEADING TO EGRESS DOORS.
8. PROVIDE A CRUSHED STONE/ CONCRETE SPILLWAY (MATCH SURROUNDING LANDSCAPE STONE) AT LOCATION OF DAYLIGHT FOR FOUNDATION DRAIN. FOUNDATION DRAIN TO HAVE FILTER SOCK AND BIRD/ INSECT SCREEN INSTALLED AT DAYLIGHT LOCATION.

WALL LEGEND:

TYPICAL EXTERIOR WALL
12" CMU REINFORCED WALL. REFER TO STRUCTURAL DRAWINGS.

F.E. — FIRE EXTINGUISHER
PROVIDE FIRE EXTINGUISHER WITH WALL MOUNTING BRACKET IN LOCATION SHOWN ON DWGS.

W.J. — WALL JOINT
CONSTRUCTION WALL JOINT - FILL JOINT W/ EXPANSION JOINT MATERIAL, REFER TO DETAIL L/140705-001-CA-03-400006.

Water Containment Area

STATE OF NEW MEXICO — CHRISTOPHER M. WEISBERG — No. 5325 — REGISTERED ARCHITECT — MARCH 30, 2015

PROFESSIONAL SEAL

ORIGINAL SCALE 3/16"=1'-0"

U.S. ARMY CORPS OF ENGINEERS
ALBUQUERQUE DISTRICT
ALBUQUERQUE, NEW MEXICO

CB&I FEDERAL SERVICES LLC
312 DIRECTORS DRIVE
KNOXVILLE, TENNESSEE 37923
865-690-3211

CLIENT DWG NO

NOTES

NO.	REVISION	DRAWN	CK'D	APP'D	DATE
0	ISSUED FOR CONSTRUCTION	PCA	CMW	CMW	03/30/15

REFERENCE DRAWINGS

THIS DOCUMENT IS THE PROPERTY OF CHICAGO BRIDGE & IRON COMPANY ("CB&I"). IT MAY CONTAIN INFORMATION DESCRIBING TECHNOLOGY OWNED BY CB&I AND DEEMED TO BE COMMERCIALLY SENSITIVE. IT IS TO BE USED ONLY IN CONNECTION WITH WORK BEING PERFORMED BY CB&I. REPRODUCTION IN WHOLE OR IN PART FOR ANY PURPOSE OTHER THAN WORK PERFORMED BY CB&I IS FORBIDDEN EXCEPT BY EXPRESS WRITTEN PERMISSION OF CB&I. IT IS TO BE SAFEGUARDED AGAINST BOTH DELIBERATE AND INADVERTENT DISCLOSURE TO ANY THIRD PARTY.

ARCHITECTURAL FLOOR PLAN

PHASE IV MID-PLUME PUMP & TREAT SYSTEM

FOR: BULK FUELS FACILITY, KIRTLAND AFB, NM

DRAWN: PCA | CK'D: CMW | APP'D: CMW | DATE: 03/30/15 | SCALE: AS SHOWN

PROJECT NO: 140705 | DWG NO: 140705-001-CA-02-400002 | REV: 0

	GAC Tanks (operational)	GAC Tanks (Appendix)	Feed Tank/ TW Tank
Q (gpm)	400	550	
τ (min)	12	10	
V (gal)	4800	5500	6000
GAC (MAX)	A (ft)	78.5	
(this is according to OD)	H (ft)	10	
	V (ft^3)	785	
	V (gal)	5872	

	Inside sump	Truck Sump	
L (ft)	50	60	
W (ft)	2	4	
H (ft)	2	3.67	
V (ft^3)	200	881	
V (gal)	1496	6589	
t (min)	30	30	
Q (cfs)	0.11	0.49	
Q (gpm)	50	220	
$W = Q\gamma h/\eta$			
W (ft*lbf/s)	13.8	111.3	(Assumes 100% pump efficiency)
W_{min} (hp)	0.03	0.20	
Current Pumps			
Q (gpm)	20	35	gpm
W (hp)	0.33	0.5	hp
$t_{6000gal}$	300	171	min
$t_{6000gal}$	5	3	hr
		(to be purchased)	

THIS PAGE INTENTIONALLY LEFT BLANK

Sloped Volume	Method 1	Method 2	
h	1.3125	0.65625	in
b	252	252	in
L	780	780	in
A	165.375	165.375	in^2
V	128992.5	128992.5	in^3
V	**558**	**558**	gal

	Section 1	Section 2	Section 3	Section 4	Section 5 (-)	
L	See above	21	15	15	-3	ft
W		11.5	29	60	14	ft
H		0.25	0.5	0.5	0.5	ft
V		60.375	217.5	450	-21	ft^3

Vsum	706.875	ft^3
Vsumgal	**5287.425**	gal

V (gal)	**1496.2**	(sump inside GWTS)

Total Volume	**7342**

The GWTS sump and containment area *will* hold the largest tank leak.

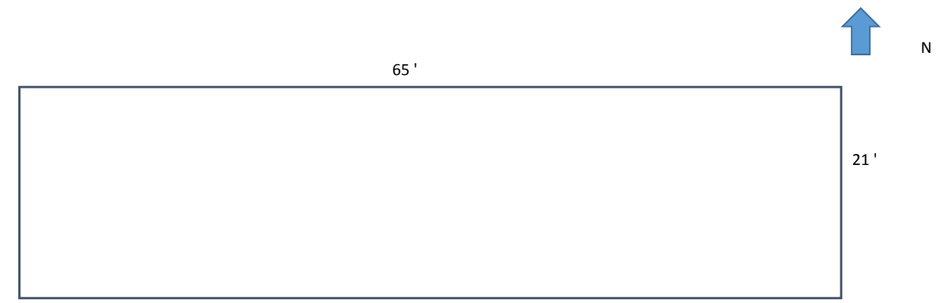

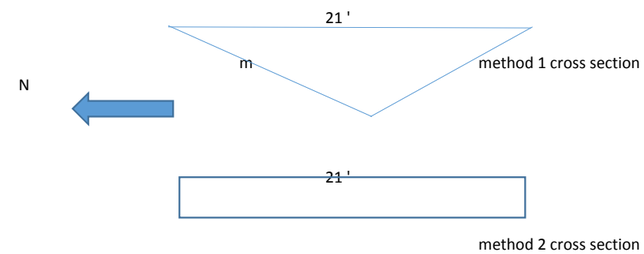

m
0.0104

rise
0.109375 ft
1.3125 in

THIS PAGE INTENTIONALLY LEFT BLANK

APPENDIX L

Sampling and Analysis Plan

THIS PAGE INTENTIONALLY LEFT BLANK

Sampling and Analysis Plan

This sampling and analysis plan describes sampling activities intended for monitoring the Groundwater Treatment System (GWTS) located at Kirtland Air Force Base (AFB), New Mexico. These activities are to occur whether the GWTS is discharging to irrigation, injection well(s), and/or other approved discharge locations.

L.1 Discharge Requirements

Treated groundwater discharged from the GWTS must meet the human health standard for contaminants that are listed in Section 20.6.2.3103 of the New Mexico Administrative Code (NMAC), requirements of the New Mexico Environment Department (NMED) Ground and Surface Water Protection regulations (NMAC 20.6.2), and must comply with any additional approved federal, state, or local permits. Effluent discharged from the GWTS must not exceed the following criteria as currently stipulated in permits from the aforementioned regulations:

Ethylene dibromide (EDB) – 0.05 micrograms per liter (µg/L)
Benzene – 5 µg/L
Ethylbenzene – 700 µg/L
Toluene – 750 µg/L
Total xylenes – 620 µg/L
Iron (Dissolved) – 1 milligram per liter (mg/L)
Manganese (Dissolved) – 0.2 mg/L

L.2 Sample Locations and Sampling Interval

L.2.1 Extraction Wells

All of the extraction wells are capable of being sampled individually. The sample will be collected from the sample valve in the wellhead vault and/or will be collected at the sample valves located in the Well Control House just downstream of the flowmeter for each well. Any additional extraction wells added to the system will be sampled weekly for the first month of operation. Sampling of individual extraction wells is only required when the combined influent concentrations increase more than 20 percent from the previous month's results for any of the monitored contaminants of concern.

L.2.2 Treatment System

Samples will be taken monthly at three locations in the GWTS to monitor the performance of the carbon treatment system (Table L-1). These monthly samples will be taken at the inlet to the carbon vessel (taken at the outlet of P-112 A/B, prior to the pre-filters), at the outlet of the first or lead carbon vessel, and at the outlet of the post-bag filter skids. During the first month of operation of a new extraction well or a new treatment train, the samples will be collected daily for 7 days, and then weekly until the end of the first month.

L.2.3 Effluent Monitoring

Additional effluent monitoring following any significant change to the treatment train (e.g. addition of a new extraction well) will consist of samples taken from the outlet of the post-filters. During the first month of operation, the samples will be collected daily for 7 days and then weekly until the end of the month.

Table L-1 Groundwater Treatment System Monitoring Requirements

Analysis	Frequency [a]	Sample Location
EDB – Method SW8011	Monthly	Influent, between tanks, and effluent
Benzene, ethylbenzene, toluene, and xylenes (BTEX) – Method SW8260C	Monthly	
Dissolved iron and dissolved manganese – Method SW6010C	Monthly	

[a] Sampling frequency will be increased (daily, weekly, etc.) during shakedown testing of new components.
EDB = ethylene dibromide
SW = EPA SW-846-Test Methods for Evaluating Solid Waste, 3rd Edition, 1986 and Updates

L.3 Sampling Procedure

Samples will be collected from their respective sampling ports by opening the port and discharging process water into the sampling containers. The port will be opened in such a way that it does not readily cause entraining of air and subsequent off-gassing of the samples and will not cause loss of sample preservatives from sample containers. Waste containers will be placed under sampling ports prior to sampling to ensure capture of all process water. Excess water collected in the waste containers will be emptied into the GWTS building sump for treatment.

Field filtering for dissolved metals will be performed by affixing a clean piece of poly tubing onto the sampling port. The inline field filter (0.45 micron) will be attached to the open end of the poly tubing. The port will then be opened so as to condition the poly tubing and filter with process water for approximately 30 seconds. Samples will then be collected from the process water flowing through the filter. All process water not collected in the sample container will be collected into an appropriate waste container and then discharged to the GWTS building sump for treatment.

L.4 Field Measurements

Field parameters including temperature, turbidity, dissolved oxygen concentration, specific conductance, pH, and oxidation reduction potential will be collected in the field using water quality and turbidity meters. See Table L-2 for field meter calibration requirements and associated corrective actions.

L.5 Field Quality Control (QC) Samples

Field QC samples will be collected in association with the GWTS sampling to ensure field sample collection and analytical precision and representativeness. Field duplicate samples will be collected at a frequency of 10 percent (1 per 10 GWTS samples collected) and shipped to the laboratory for the same analyses as the as GWTS samples (EDB, benzene, ethylbenzene, toluene, total xylenes, and dissolved iron and manganese). In addition, trip blank samples for EDB and BTEX will accompany each shipment of GWTS samples to the laboratory to monitor for volatile organics contamination during sampling, sample shipping and storage of samples at the laboratory.

L.6 Sample Bottles, Preservation, and Shipping

Water samples collected from the GWTS will be collected and analyzed in accordance with the EPA guidelines for analytical methods and parameters, sample containers, sample preservation, and sample preparation and analysis holding times presented on Table L-3.

Table L-2 Field Instrument Quality Control

Field Equipment	Calibration Verification Activity	Frequency	Acceptance Criteria	Corrective Action	Responsible Person	Standard Operating Procedure Reference
YSI (or equivalent) water quality meter with flow cell	Check calibration against two of the following three traceable standards with nominal pH of 4.0, 7.0 and 10.0 Check calibration of outside of range -10 ºC – 60 ºC (14 ºF – 140 ºF)	Calibrate probe once per week and then verify once per day before first use	± 0.2 pH units	Recalibrate	Field personnel	Manufacturer's Operation Manual
	Check calibration against specific conductance standard Check calibration of outside of range -10 ºC – 60 ºC (14 ºF – 140 ºF)	Calibrate probe once per week and then verify once per day before first use	± 0.5% of standard value or 0.0001 mS/cm, whichever is greater	Recalibrate	Field personnel	Manufacturer's Operation Manual
	Check calibration against dissolved oxygen (ambient air) Check calibration of outside of range -5 ºC – 45 ºC (23 ºF – 113 ºF)	Calibrate once per day before first use	± 2% of reading or 2% of air saturation, whichever is greater	Recalibrate	Field personnel	Manufacturer's Operation Manual
	Check calibration against oxygen reduction potential standards Check calibration of outside of range -10 ºC – 60 ºC (14 ºF – 140 ºF)	Calibrate probe once per week and then verify once per day before first use	± 20 mV standard value	Recalibrate	Field personnel	Manufacturer's Operation Manual
Turbidity Meter	Calibrate with primary standard of 10 nephelometric turbidity units	Calibrate every 3 months; verify once a week reading is within acceptable value	±10%	Recalibrate	Field personnel	Manufacturer's Operation Manual

Table L-3. Analytical Parameter, Method, Sample Container, Preservation, and Holding Time Requirements

Parameter	Preparation/ Analysis Method	Bottle Type	Preservative	Preparation Holding Time	Analytical Holding Time
Benzene, ethylbenzene, toluene, xylenes	SW5030B/8260C	3 x 40-ml glass VOA vials	HCl to pH < 2; Cool ≤6°C	NA	14 days
Ethylene dibromide	SW8011	2 x 40-ml glass VOA vials	HCl to pH < 2; Cool ≤6°C	NA	14 days
Dissolved metals – iron and manganese	SW3005A/6010C	1 x 250-ml HDPE	Nitric acid to pH <2; Cool ≤6°C	180 days	180 days

Notes:
°C = Degrees Celsius
HCl = Hydrochloric acid
HDPE = High density polyethylene
ml = Milliliter
SW = USEPA SW846 – Test Methods for Evaluating Solid Waste, Third Edition and Updates
VOA = Volatile organics analysis

Sample packaging and shipping requirements are designed to maintain sample integrity from the time a sample is collected until it is received at the analytical laboratory. All chain-of-custody forms, sample labels, custody seals, and other sample documents will be completed. Specific procedures for packaging and shipping of environmental samples are presented below:

- A sample label, completed with indelible ink, will be attached to the sample bottle.
- A cooler will be used as a shipping container.
- In preparation for shipping samples, the drain plug will be taped shut so that no fluids, such as melted ice, will drain out of the cooler during shipment. A large plastic bag may be used as a liner for the cooler. Ice will be placed at the bottom of the cooler.
- The containers will be placed in the lined cooler. Cardboard separators or bubble wrap may be placed between the containers at the discretion of the shipper.
- All samples for chemical analysis must be shipped cooled to ≤6 degrees Celsius with ice. All samples will require icing before shipment. A temperature blank will be included in each shipment of samples.
- The liner will be taped closed, if used, and sufficient packing material will be used to prevent sample containers from making contact or rolling around during shipment.
- A copy of the chain-of-custody form will be placed inside the cooler.
- The cooler will be closed and taped shut with clear packing tape.
- Custody seals will be placed on the cooler. Clear tape will be placed over the custody seals to help prevent them from being accidentally torn or ripped off.

- The cooler of samples will be shipped via an overnight carrier. A copy of the shipping bill will be retained for the field records and sent electronically to the project chemist.

L.7 Laboratory Analyses and Methods

Information regarding analytical methods, reporting limits and discharge limits are listed in Table L-4.

Table L-4 Method Reporting Limits and Screening Criteria for Water

Analyte	Analytical Method	CASRN	Units	NMWQCC[1]	Discharge Limits[2]	Achievable Laboratory Limits[3]		
						LOQ	LOD	DL
Volatile Organic Compounds								
1,2-Dibromoethane (EDB)	SW8011	106-93-4	µg/L	0.1	0.05	0.03	0.02	0.01
Benzene	SW8260C	71-43-2	µg/L	10	5.0	1.0	1.0	0.5
Ethylbenzene	SW8260C	100-41-4	µg/L	700	700	1.0	1.0	0.5
Toluene	SW8260C	108-88-3	µg/L	750	750	1.0	1.0	0.5
Xylene (Total)	SW8260C	1330-20-7	µg/L	620	620	1.0	1.0	0.5
Metals – Dissolved								
Iron	SW6010C	7439-89-6	mg/L	1.0	1.0	0.4	0.05	0.033
Manganese	SW6010C	7439-96-5	mg/L	0.2	0.2	0.01	0.0013	0.0008

[1] NMWQCC standards per the New Mexico Administrative Code Title 20.6.2.3101A, Standards for Ground Water of 10,000 mg/L Total Dissolved Solids Concentration or Less (NMAC 2004). For metals, the NMWQCC standard applies to dissolved metals.
[2] The project screening level was selected to satisfy the requirements of the Kirtland AFB Hazardous Waste Permit No. NM9570024423 as the lower of 1) approved permit requirements or 2) NMWQCC standard. Project screening levels below the LOD are highlighted and the screening level is set at the LOQ.
[3] Achievable laboratory limits are for Eurofins Lancaster Laboratories Environmental, LLC, Lancaster PA or equivalent.
µg/L = Microgram(s) per liter.
mg/L = Milligram(s) per liter.
CASRN = Chemical Abstracts Service Registry Number.
DL = Detection limit.
LOD = Limit of detection.
LOQ = Limit of quantitation.
NMWQCC = New Mexico Water Quality Control Commission

L.8 Data Validation

All samples collected for permit compliance will be reviewed using established data validation procedures to perform EPA Stage 3 data review on 100 percent of data. The data review will be performed using the quality control (QC) criteria specified in the following analytical method and data validation guidelines, or the most recent updates to these documents:

- Project-specific QAPjP
- DoD QSM for Environmental Laboratories, Version 5.0 (May 2013)
- EPA Test Methods for Evaluating Solids Waste, Physical/Chemical Methods (SW 846, Third Edition and updates) (EPA 2006)

- EPA Contract Laboratory Program, National Functional Guidelines for Superfund Organic Methods Data Review (EPA 2014a)

- EPA Contract Laboratory Program, National Functional Guidelines for Inorganic Superfund Data Review (EPA 2014b).

The following QC elements will be included in the EPA Stage 3 data review:

Sample extraction and analysis holding times
Laboratory method blanks
Surrogate spike recoveries
LCS/LCSD recoveries
MS/MSD recoveries
Relative percent difference (RPD)
Initial calibrations
Continuing calibrations
Trip blank results
Field duplicate sample precision

Data will be validated and flagged with the data qualifiers found in Table L-5 as applicable:

Table L-5 Data Qualification Flags and Reason Codes

Qualifier	Definition
	No Qualifier indicates that the data are acceptable both qualitatively and quantitatively.
U	The analyte was analyzed for but was not detected above the reported limit of quantitation.
J	The analyte was analyzed for and was positively identified, but the reported numerical value may not be consistent with the amount actually present in the environmental sample. Results are estimated, although the data are considered usable and may be used as appropriate to meet project objectives. Results are qualitatively acceptable and quantitatively uncertain.
J-	The analyte was positively identified; the associated numerical value is its approximate concentration with a low bias in the sample.
J+	The analyte was positively identified; the associated numerical value is its approximate concentration with a high bias in the sample.
UJ	The analyte was analyzed for but was not detected. The reported quantitation limit is approximate and may be inaccurate or imprecise.
R	The analyte was analyzed for, but the presence or absence of the analyte has not been verified. Re-sampling and re-analysis may be necessary to confirm or deny the presence of the analyte. Results are rejected, and data are unusable for any purposes.

As a result of the data validation process, EPA qualifiers will be generated and applied to the affected sample results that exceeded the established QC criteria. EPA Stage 3 data review findings will be summarized and documented with each quarterly monitoring report.

L.9 Data Analysis and Reporting Triggers

When BTEX and EDB analytical results from water samples collected between the GAC vessels reach 90% of any of the project screening levels (See Section L.1), the flow will be switched between the lead and lag GAC vessels and the GAC in the former lead GAC will be scheduled for change-out. If dissolved iron and manganese concentrations reach 90% of the project screening levels (See Section L.1), then the

GWTS can be temporarily shut down and the lead GAC vessels may be backwashed prior to GAC change-out. If backwashing is performed, a water sample will be collected between the GAC vessels to confirm that the backwashing has improved the dissolved iron and manganese retention. If dissolved iron and manganese concentrations cannot comply with the approved permit conditions utilizing the existing GAC treatment system, an added treatment process will be discussed with NMED and potentially incorporated into the GWTS.

L.10 Reporting

L.10.1 Compliance

Compliance reporting will occur quarterly in the respective Quarterly Reports. The Quarterly Report is submitted 90-days after the conclusion of the quarterly groundwater sampling event. These quarterly reports include: quarterly and cumulative operation run-time, cumulative EDB removal, quarterly and cumulative treated IDW purge water to irrigation, injection well(s), or other discharge location, groundwater treated, analytical sampling results of the GWTS (e.g., influent, between the GAC tanks, and treated effluent), major maintenance activities (e.g., GAC changes, pump changes, etc.), mechanical integrity test results of effluent line and injection wells, significant system alarms or shut downs for more than 48 hours, and groundwater potentiometric elevation map(s).

L.10.2 Exceedance

As soon as the Kirtland AFB has knowledge that effluent water quality exceeds the discharge criteria for one or more of the contaminants listed in approved permits, the NMED Hazardous Waste Bureau and Ground Water Quality Bureau must be notified in accordance with Notification Procedures in Appendix K - Contingency Plan. Any actions that can be taken to correct the problem and achieve the required effluent concentrations will be performed immediately. Following plant operational adjustments, the effluent groundwater will be re-tested, and the monitoring frequency will be increased to weekly. After 4 consecutive weeks of analytical results below the standards for the discharge permit analytes listed in Section L.1, monitoring will return to a monthly frequency.

If the required actions are considered to be outside the scope of work for plant operations, then the system will be shut down pending submittal of a corrective action plan to the NMED.

THIS PAGE INTENTIONALLY LEFT BLANK

APPENDIX M

Waste Characterization Documentation

THIS PAGE INTENTIONALLY LEFT BLANK

From:	Simpler, Trent SPA
To:	Jercinovic, Devon; Phaneuf, Mark J SPA; Dreeland, Linda SPA; Sanchez, Amy E. SPA; Adria Bodour; BITNER, LUDIE W GS-13 USAF AFCEC/CZO; Vic Branson; Amdurer, Mike; Tarbert, Jason A
Subject:	Bag filters
Date:	Thursday, June 09, 2016 7:50:47 AM

Devon and Mike,

We spoke with Katrina and she is good with us throwing the bag filters away. There is no official reply.

Consider this your approval to put used bag filters in the dumpster.

Trent

Trent Simpler, P.E.
Project Manager BFF
Chair Wind Energy CX
Red Team LGL
US Army Corps of Engineers
Trent.Simpler@usace.army.mil
505-342-4823 (office)
505-301-6996 (Blackberry)

HAZARDOUS WASTE PROCESS DESCRIPTION

ORGANIZATION CODE & UEC NAME:

WASTE COLLECTION SITE ID (IAP#):

SHOP CODE:

BUILDING NUMBER/LOCATION: Building 19150 Bulk Fuels Facility Groundwater Treatment System (GWTS)

DATE: 4/27/16

DESCRIPTION OF PROCESS:
Bag filters are located at both the inlet and outlet of the granular-activated carbon beds at the GWTS to remove suspended solids resulting from groundwater extraction, and fines released from the activated carbon beds. During normal operation of the GWTS, bag filters are replaced on an as-needed basis, or semiannually as required in the *Operation and Maintenance Manua*l, *Mid-Plume Pump and Treat System* (USACE, 2016).

WASTE DESCRIPTION:
Non-hazardous solid waste. See Attachment 1 for a description of how the waste was characterized, and Attachment 2 for the analytical data.

LIST MATERIALS AND NSNs SPECIFIC TO THIS PROCESS:
Used bag filters (10 micron size #2, 7-inch by 32-inch) stored in DOT-approved 55-gallon drums

IS THIS A NEW PROCESS? YES____X____ NO_____
DESCRIBE ANY CHANGES MADE TO PROCESS SINCE LAST EVALUATION
(If no change, a negative response is required)
N/A

PREPARER'S NAME, JOB TITLE, PHONE NUMBER, & SIGNATURE
(This person must be actively involved in the process)

I certify that to the best of my knowledge and belief, all of the process description information contained herein is accurate and complete. _____
Signature of Person Actively Involved in the Process
Caitlin LaChance, Scientist
505-262-8942

PLEASE include, if applicable:

- Any T. O. or other references related to the process;

- A diagram of the process; and
- Any comments relevant to process description not otherwise included.

****FOR HAZARDOUS WASTE PERSONNEL USE ONLY****

ASSIGNED WASTE PROFILE:_____

COMMENTS: _____

Attachment 1: Bag Filter Waste Characterization and Request for Disposal

Background

Kirtland Air Force Base (KAFB) is investigating and remediating a historical release of aviation gasoline and jet fuel from the Bulk Fuels Facility (BFF) pursuant to the Resource Conservation and Recovery Act (RCRA) corrective action provisions in Part 6 of KAFB's Hazardous Waste Treatment Facility Operating Permit (HWTF Permit No. NM9570024423). The HWTF Permit is enforced by the New Mexico Environment Department (NMED) Hazardous Waste Bureau (HWB).

KAFB is currently implementing an ethylene dibromide (EDB) groundwater treatment interim measure (IM) in accordance with Part 6.2.2.2.12 of the HWTF Permit. The EDB plume IM consists of extraction wells and treatment with granulated activated carbon (GAC) at the Groundwater Treatment System (GWTS) facility. The groundwater treated at the GWTS is non-hazardous. The treated effluent from the system is non-detect for all fuel-related constituents.

Bag filters are located at both the inlet and outlet of the GAC beds at the GWTS to remove suspended solids resulting from groundwater extraction, and fines released from the GAC beds. During normal operation of the GWTS, bag filters are replaced on an as-needed basis, or semiannually as required in the *Operation and Maintenance Manua*l, *Mid-Plume Pump and Treat System* (USACE, 2016). The waste was accumulated from January 1, 2016 through April 12, 2016. Currently, the waste is being stored on-site in a 55-gallon drum and requires disposal.

Waste Characterization

A generator may use testing, acceptable knowledge (i.e.: process knowledge), or a combination of the two to satisfy its RCRA waste characterization responsibilities (40 CFR 262.11). Waste characterization requirements are detailed in Part 2.6 of the HWTF Permit. Part 2.6.2 states that "Acceptable knowledge may be used as the sole method to characterize waste only when the waste is from a process that is consistent and well-documented".

The influent and effluent from the GWTS meets this permit requirement for the use of acceptable knowledge as the sole method to characterize the inlet and outlet bag filters. As stated above, the influent to the treatment system that goes through the inlet bag filters is nonhazardous and contains no constituents other than EDB above applicable groundwater standards. The treated groundwater that goes through the outlet bag filters has no detectable fuel constituents and meets drinking water quality standards.

Analytical results from two extraction wells (KAFB-106233 and KAFB-106234) and GWTS influent and effluent samples were evaluated as part of the acceptable knowledge review for the inlet filters. The extraction well groundwater and GWTS samples were analyzed for EDB, benzene, toluene, ethylbenzene, total xylenes, dissolved manganese, and dissolved iron. Benzene is the only analyte in this analytical suite that has an established toxicity characteristic standard (500 micrograms per liter; Title 40 Code of Federal Regulations Part 264.24, Table 1). As shown in Attachment 2, benzene concentrations were non-detect for all samples taken for the treatment system, and therefore below the established toxicity characteristic standard.

Conclusion

The totality of the acceptable knowledge demonstrates that the inlet and outlet bag filters are not hazardous waste; therefore, the waste is considered to be non-hazardous. The used bag filters are also not considered to be special waste, as defined in 20.9.7.S(13) NMAC. If the concentrations of contaminants in the system increase to a level at or above the regulatory limits, this process will be reevaluated and revised to comply with disposal requirements.

Attachment 2

Groundwater Extraction Well and Groundwater Treatment System Analtyical Data

				LOCATION CODE	GWTS-INF		GWTS-GAC1		GWTS-EFF		GWTS-INF		GWTS-GAC1	
				SAMPLE NO	GWTS-INF-0001		GWTS-GAC1-0001		GWTS-EFF-0001		GWTS-INF-0002		GWTS-GAC1-0002	
				SAMPLE DATE	12/16/2015		12/16/2015		12/16/2015		12/18/2015		12/18/2015	
				SAMPLE TIME	16:00		16:00		16:00		14:15		14:25	
				SAMPLE DAY	Wednesday		Wednesday		Wednesday		Friday		Friday	
				DAY NUMBER	1		1		1		2		2	
				SAMPLE PURPOSE	REG		REG		REG		REG		REG	
				LABORATORY	Empirical		Empirical		Empirical		Empirical		Empirical	
				LAB DATA DUE	12/18/2015		12/18/2015		12/18/2015		12/20/2015		12/20/2015	
Chemical Class & Analytical Method	Parameter	Toxicity Characteristics (40 CFR 264.24)	NMED Ground Water Protection Standards (Sec. 20.6.2.3103)	EPA MCLs[a]	Result	LOQ	Result	LOQ	Result	LOQ	Result	LOQ	Result	LOQ
Draft Analytical Data														
EDB (ug/L)SW8011	1,2-DIBROMOETHANE	NE	0.1	0.05	0.194	0.03	ND	0.03	ND	0.03	0.18	0.0281	ND	0.0288
VOC (ug/L)/ SW8260B	BENZENE	500	10	5	ND	1	ND	1	ND	1	ND	1	ND	1
	ETHYLBENZENE	NE	750	700	ND	1	ND	1	ND	1	0.316J	1	ND	1
	TOLUENE	NE	750	1000	ND	1	ND	1	ND	1	ND	1	ND	1
	XYLENES	NE	620	10000	0.918J	3	ND	3	ND	3	2.89J	3	ND	3
Metals (ug/L)/SW6010C	IRON, DISSOLVED	NE	1,000	NE	36.8J	100	ND	100	ND	100	239	100	ND	100
	MANGANESE, DISSOLVED	NE	200	NE	ND	15	5.02J	15	3.55J	15	15.5	15	5.46J	15
TDS (mg/L)/SM2540C	TDS	NA	1,000	NE	-	-	-	-	-	-	-	-	-	-
TSS (mg/L)/SM2540D	TSS	NA	NE	NE	-	-	-	-	-	-	-	-	-	-
Field Data														
	Temperature (Deg.C)	---	---	---	17.48		17.33		13.78		17		16.4	
	Spec. Conductivity (us/cm)	---	---	---	354.2		373.5		609		393		388	
	pH	---	---	---	8.1		9.1		8.5		7.82		8.86	
	ORP (mV)	---	---	---	214		225		231		79.9		117.4	
	DO (mg/L)	---	---	---	6.91		0.57		7.53		7.64		1.48	

Attachment 2
Groundwater Extraction Well and Groundwater Treatment System Analtyical Data

				LOCATION CODE	GWTS-EFF		GWTS-INF		GWTS-GAC1		GWTS-EFF		GWTS-INF	
				SAMPLE NO	GWTS-EFF-0002		GWTS-INF-0003		GWTS-GAC1-0003		GWTS-EFF-0003		GWTS-INF-0004	
				SAMPLE DATE	12/18/2015		21-Dec-15		21-Dec-15		21-Dec-15		22-Dec-15	
				SAMPLE TIME	14:35		12:15		12:30		12:40		15:20	
				SAMPLE DAY	Friday		Monday		Monday		Monday		Tuesday	
				DAY NUMBER	2		3		3		3		4	
				SAMPLE PURPOSE	REG		REG		REG		REG		REG	
				LABORATORY	Empirical		Empirical		Empirical		Empirical		Empirical	
				LAB DATA DUE	12/20/2015		12/23/2015		12/23/2015		12/23/2015		12/24/2015	
Chemical Class & Analytical Method	Parameter	Toxicity Characteristics (40 CFR 264.24)	NMED Ground Water Protection Standards (Sec. 20.6.2.3103)	EPA MCLs[a]	Result	LOQ	Result	LOQ	Result	LOQ	Result	LOQ	Result	LOQ
Draft Analytical Data														
EDB (ug/L)SW8011	1,2-DIBROMOETHANE	NE	0.1	0.05	ND	0.0284	0.195	0.0281	ND	0.0282	ND	0.028	0.182	0.0283
VOC (ug/L)/ SW8260B	BENZENE	500	10	5	ND	1	ND	1	ND	1	ND	1	ND	1
	ETHYLBENZENE	NE	750	700	ND	1	ND	1	ND	1	ND	1	ND	1
	TOLUENE	NE	750	1000	ND	1	ND	1	ND	1	ND	1	ND	1
	XYLENES	NE	620	10000	1.08J	3	ND	3	ND	3	ND	3	ND	3
Metals (ug/L)/SW6010C	IRON, DISSOLVED	NE	1,000	NE	81.2J	100	37.3J	100	ND	100	30.4J	100	ND	100
	MANGANESE, DISSOLVED	NE	200	NE	4.3J	15	ND	15	5.56J	15	5.87J	15	ND	15
TDS (mg/L)/SM2540C	TDS	NA	1,000	NE	-	-	-	-	-	-	-	-	-	-
TSS (mg/L)/SM2540D	TSS	NA	NE	NE	-	-	-	-	-	-	-	-	-	-
Field Data														
	Temperature (Deg.C)	---	---	---	14.7		18.3		17.3		16.3		19.3	
	Spec. Conductivity (us/cm)	---	---	---	542		387		388		434		397	
	pH	---	---	---	8.02		7.64		8.7		8.17		8.2	
	ORP (mV)	---	---	---	175.5		181.3		177		154.1		265.5	
	DO (mg/L)	---	---	---	6.54		7.95		3.16		6.62		7.42	

Attachment 2
Groundwater Extraction Well and Groundwater Treatment System Analtyical Data

				LOCATION CODE	GWTS-GAC1		GWTS-EFF		GWTS-INF		GWTS-GAC1		GWTS-EFF	
				SAMPLE NO	GWTS-GAC1-0004		GWTS-EFF-0004		GWTS-INF-0005		GWTS-GAC1-0005		GWTS-EFF-0005	
				SAMPLE DATE	22-Dec-15		22-Dec-15		29-Dec-05		29-Dec-05		29-Dec-05	
				SAMPLE TIME	15:10		15:00		13:55		13:47		13:38	
				SAMPLE DAY	Tuesday		Tuesday		Tuesday		Tuesday		Tuesday	
				DAY NUMBER	4		4		5		5		5	
				SAMPLE PURPOSE	REG		REG		REG		REG		REG	
				LABORATORY	Empirical		Empirical		Empirical		Empirical		Empirical	
				LAB DATA DUE	12/24/2015		12/24/2015		12/31/2015		12/31/2015		12/31/2015	
Chemical Class & Analytical Method	Parameter	Toxicity Characteristics (40 CFR 264.24)	NMED Ground Water Protection Standards (Sec. 20.6.2.3103)	EPA MCLs[a]	Result	LOQ	Result	LOQ	Result	LOQ	Result	LOQ	Result	LOQ
Draft Analytical Data														
EDB (ug/L)SW8011	1,2-DIBROMOETHANE	NE	0.1	0.05	ND	0.0278	ND	0.0283	0.181	0.0289	ND	0.0288	ND	0.0287
VOC (ug/L)/ SW8260B	BENZENE	500	10	5	ND	1	ND	1	ND	1	ND	1	ND	1
	ETHYLBENZENE	NE	750	700	ND	1	ND	1	ND	1	ND	1	ND	1
	TOLUENE	NE	750	1000	ND	1	ND	1	ND	1	ND	1	ND	1
	XYLENES	NE	620	10000	ND	3	ND	3	ND	3	ND	3	ND	3
Metals (ug/L)/SW6010C	IRON, DISSOLVED	NE	1,000	NE	ND	100	39.4J	100	ND	100	ND	100	63J	100
	MANGANESE, DISSOLVED	NE	200	NE	5.3J	15	18.5	15	ND	15	6.65J	15	9.47J	15
TDS (mg/L)/SM2540C	TDS	NA	1,000	NE	-	-	-	-	-	-	-	-	-	-
TSS (mg/L)/SM2540D	TSS	NA	NE	NE	-	-	-	-	-	-	-	-	-	-
Field Data														
	Temperature (Deg.C)	---	---	---	19		18.2		18.2		16.1		17.7	
	Spec. Conductivity (us/cm)	---	---	---	363		391		405		393		419	
	pH	---	---	---	8.91		8.36		8.05		8.81		7.38	
	ORP (mV)	---	---	---	266.1		268.2		114.5		115.3		113.8	
	DO (mg/L)	---	---	---	2.13		6.5		7.66		2.46		6.47	

Attachment 2

Groundwater Extraction Well and Groundwater Treatment System Analtyical Data

				LOCATION CODE	GWTS-INF		GWTS-GAC1		GWTS-EFF		GWTS-INF		GWTS-GAC1	
				SAMPLE NO	GWTS-INF-0006		GWTS-GAC1-0006		GWTS-EFF-0006		GWTS-INF-0007		GWTS-GAC1-0007	
				SAMPLE DATE	30-Dec-05		30-Dec-05		30-Dec-15		31-Dec-15		31-Dec-15	
				SAMPLE TIME	13:05		13:00		13:10		9:47		9:43	
				SAMPLE DAY	Wednesday		Wednesday		Wednesday		Thursday		Thursday	
				DAY NUMBER	6		6		6		7		7	
				SAMPLE PURPOSE	REG		REG		REG		REG		REG	
				LABORATORY	Empirical		Empirical		Empirical		Empirical		Empirical	
				LAB DATA DUE	1/4/2016		1/4/2016		1/4/2016		1/5/2016		1/5/2016	
Chemical Class & Analytical Method	Parameter	Toxicity Characteristics (40 CFR 264.24)	NMED Ground Water Protection Standards (Sec. 20.6.2.3103)	EPA MCLs[a]	Result	LOQ	Result	LOQ	Result	LOQ	Result	LOQ	Result	LOQ
Draft Analytical Data														
EDB (ug/L)SW8011	1,2-DIBROMOETHANE	NE	0.1	0.05	0.194	0.0284	ND	0.0284	ND	0.0282	0.183	0.0287	ND	0.0286
VOC (ug/L)/ SW8260B	BENZENE	500	10	5	ND	1	ND	1	ND	1	ND	1	ND	1
	ETHYLBENZENE	NE	750	700	ND	1	ND	1	ND	1	ND	1	ND	1
	TOLUENE	NE	750	1000	ND	1	ND	1	ND	1	ND	1	ND	1
	XYLENES	NE	620	10000	ND	3	ND	3	ND	3	ND	3	ND	3
Metals (ug/L)/SW6010C	IRON, DISSOLVED	NE	1,000	NE	ND	100	ND	100	ND	100	38.3J	100	ND	100
	MANGANESE, DISSOLVED	NE	200	NE	ND	15	6.9J	15	6.21J	15	ND	15	8.22J	15
TDS (mg/L)/SM2540C	TDS	NA	1,000	NE	-	-	-	-	-	-	-	-	-	-
TSS (mg/L)/SM2540D	TSS	NA	NE	NE	-	-	-	-	-	-	-	-	-	-
Field Data														
	Temperature (Deg.C)	---	---	---	17		18.8		17.1		17.2		18.4	
	Spec. Conductivity (us/cm)	---	---	---	421		407		425		424		401	
	pH	---	---	---	8.1		8.75		8.02		8.05		8.54	
	ORP (mV)	---	---	---	172.3		171.2		142.5		186.8		182.4	
	DO (mg/L)	---	---	---	7.7		3.33		6.46		7.47		2.95	

Attachment 2

Groundwater Extraction Well and Groundwater Treatment System Analtyical Data

				LOCATION CODE	GWTS-EFF		GWTS-INF		GWTS-GAC1		GWTS-EFF		KAFB-106233	
				SAMPLE NO	GWTS-EFF-0007		GWTS-INF-0008		GWTS-GAC1-0008		GWTS-EFF-0008		GW2601	
				SAMPLE DATE	31-Dec-15		7-Jan-16		7-Jan-16		7-Jan-16		13-Jan-16	
				SAMPLE TIME	8:30		9:00		9:10		9:20		14:36	
				SAMPLE DAY	Thursday		Thursday		Thursday		Thursday		Wednesday	
				DAY NUMBER	7		Week 1		Week 1		Week 1		Initial Sample	
				SAMPLE PURPOSE	REG		REG		REG		REG		REG	
				LABORATORY	Empirical		Empirical		Empirical		Empirical		Empirical	
				LAB DATA DUE	1/5/2016		1/15/2016		1/15/2016		1/15/2016		1/21/2016	
Chemical Class & Analytical Method	Parameter	Toxicity Characteristics (40 CFR 264.24)	NMED Ground Water Protection Standards (Sec. 20.6.2.3103)	EPA MCLs[a]	Result	LOQ	Result	LOQ	Result	LOQ	Result	LOQ	Result	LOQ
Draft Analytical Data														
EDB (ug/L)SW8011	1,2-DIBROMOETHANE	NE	0.1	0.05	ND	0.0287	0.176	0.0283	ND	0.0286	ND	0.0284	0.00982J	0.0284
VOC (ug/L)/ SW8260B	BENZENE	500	10	5	ND	1	ND	1	ND	1	ND	1	ND	1
	ETHYLBENZENE	NE	750	700	ND	1	ND	1	ND	1	ND	1	0.26J	1
	TOLUENE	NE	750	1000	ND	1	ND	1	ND	1	ND	1	1.17	1
	XYLENES	NE	620	10000	ND	3	ND	3	ND	3	ND	3	1.54J	3
Metals (ug/L)/SW6010C	IRON, DISSOLVED	NE	1,000	NE	54.9J	100	ND	100	ND	100	ND	100	ND	25
	MANGANESE, DISSOLVED	NE	200	NE	7.8J	15	ND	15	7.05J	15	8.37J	15	69.3	3.75
TDS (mg/L)/SM2540C	TDS	NA	1,000	NE	-	-	-	-	-	-	-	-	195	20
TSS (mg/L)/SM2540D	TSS	NA	NE	NE	-	-	-	-	-	-	-	-	ND	4
Field Data														
	Temperature (Deg.C)	---	---	---	17.9		18.4		17.1		16.4		18.8	
	Spec. Conductivity (us/cm)	---	---	---	416		424		418		430		387	
	pH	---	---	---	8.42		7.94		8.3		7.87		6.42	
	ORP (mV)	---	---	---	194.9		151		164.7		158.16		200.1	
	DO (mg/L)	---	---	---	6.28		7.76		2.8		6.68		8.16	

Attachment 2
Groundwater Extraction Well and Groundwater Treatment System Analtyical Data

				LOCATION CODE	KAFB-106234		GWTS-INF		GWTS-GAC1		GWTS-EFF		GWTS-INF	
				SAMPLE NO	GW2602		GWTS-INF-0009		GWTS-GAC1-0009		GWTS-EFF-0009		GWTS-INF-0010	
				SAMPLE DATE	13-Jan-16		14-Jan-16		14-Jan-16		14-Jan-16		21-Jan-16	
				SAMPLE TIME	14:52		9:28		9:40		9:53		16:08	
				SAMPLE DAY	Wednesday		Thursday		Thursday		Thursday		Thursday	
				DAY NUMBER	Initial Sample		Week 2		Week 2		Week 2		Week 3 & Day 1	
				SAMPLE PURPOSE	REG		REG		REG		REG		REG	
				LABORATORY	Empirical		Empirical		Empirical		Empirical		Empirical	
				LAB DATA DUE	1/21/2016		1/22/2016		1/22/2016		1/22/2016		1/26/2016	
Chemical Class & Analytical Method	Parameter	Toxicity Characteristics (40 CFR 264.24)	NMED Ground Water Protection Standards (Sec. 20.6.2.3103)	EPA MCLs[a]	Result	LOQ	Result	LOQ	Result	LOQ	Result	LOQ	Result	LOQ
Draft Analytical Data														
EDB (ug/L)SW8011	1,2-DIBROMOETHANE	NE	0.1	0.05	0.112	0.0284	0.15	0.286	ND	0.0287	ND	0.0284	0.146	0.0284
VOC (ug/L)/ SW8260B	BENZENE	500	10	5	ND	1	ND	1	ND	1	ND	1	ND	1
	ETHYLBENZENE	NE	750	700	ND	1	ND	1	ND	1	ND	1	ND	1
	TOLUENE	NE	750	1000	0.278J	1	ND	1	ND	1	ND	1	0.661J	1
	XYLENES	NE	620	10000	0.921J	3	ND	3	ND	3	ND	3	ND	3
Metals (ug/L)/SW6010C	IRON, DISSOLVED	NE	1,000	NE	ND	25	ND	100	ND	100	37.3J	100	ND	100
	MANGANESE, DISSOLVED	NE	200	NE	8.23	3.75	ND	15	ND	15	3.69J	15	5.55J	15
TDS (mg/L)/SM2540C	TDS	NA	1,000	NE	360	20	-	-	-	-	-	-	-	-
TSS (mg/L)/SM2540D	TSS	NA	NE	NE	ND	4	-	-	-	-	-	-	-	-
Field Data														
	Temperature (Deg.C)	---	---	---	16.4		18.8		18.9		18.8		14.3	
	Spec. Conductivity (us/cm)	---	---	---	701		425		431		444		490	
	pH	---	---	---	7.86		7.62		7.83		7.47		7.35	
	ORP (mV)	---	---	---	219.9		202.8		221.9		188.3		188.9	
	DO (mg/L)	---	---	---	3.22		7.2		1.7		6.54		7.99	

Attachment 2

Groundwater Extraction Well and Groundwater Treatment System Analtyical Data

				LOCATION CODE	GWTS-GAC1		GWTS-EFF		GWTS-INF		GWTS-GAC1		GWTS-EFF	
				SAMPLE NO	GWTS-GAC1-0010		GWTS-EFF-0010		GWTS-INF-0020		GWTS-GAC1-0020		GWTS-EFF-0020	
				SAMPLE DATE	21-Jan-16		21-Jan-16		23-Feb-16		23-Feb-16		23-Feb-16	
				SAMPLE TIME	15:58		15:40		13:25		13:45		14:05	
				SAMPLE DAY	Thursday		Thursday		Tuesday		Tuesday		Tuesday	
				DAY NUMBER	Week 3 & Day 1		Week 3 & Day 1		Monthly		Monthly		Monthly	
				SAMPLE PURPOSE	REG		REG		REG		REG		REG	
				LABORATORY	Empirical		Empirical		Empirical		Empirical		Empirical	
				LAB DATA DUE	1/26/2016		1/26/2016		3/2/2016		3/2/2016		3/2/2016	
Chemical Class & Analytical Method	Parameter	Toxicity Characteristics (40 CFR 264.24)	NMED Ground Water Protection Standards (Sec. 20.6.2.3103)	EPA MCLs[a]	Result	LOQ	Result	LOQ	Result	LOQ	Result	LOQ	Result	LOQ
Draft Analytical Data														
EDB (ug/L)SW8011	1,2-DIBROMOETHANE	NE	0.1	0.05	ND	0.0286	ND	0.0281	0.0842	0.0284	ND	0.0282	ND	0.0281
VOC (ug/L)/ SW8260B	BENZENE	500	10	5	ND	1	ND	1	ND	1	ND	1	ND	1
	ETHYLBENZENE	NE	750	700	ND	1	ND	1	ND	1	ND	1	ND	1
	TOLUENE	NE	750	1000	ND	1	ND	1	ND	1	ND	1	ND	1
	XYLENES	NE	620	10000	ND	3	ND	3	ND	3	ND	3	ND	3
Metals (ug/L)/SW6010C	IRON, DISSOLVED	NE	1,000	NE	ND	100	ND	100	ND	100	ND	100	ND	100
	MANGANESE, DISSOLVED	NE	200	NE	25.6	15	11.5J	15	ND	15	ND	15	ND	15
TDS (mg/L)/SM2540C	TDS	NA	1,000	NE	-	-	-	-	-	-	-	-	-	-
TSS (mg/L)/SM2540D	TSS	NA	NE	NE	-	-	-	-	-	-	-	-	-	-
Field Data														
	Temperature (Deg.C)	---	---	---	10.8		17.2		19.4		19.4		19.5	
	Spec. Conductivity (us/cm)	---	---	---	463		570		505		471		496	
	pH	---	---	---	7.42		7.34		7.38		7.49		7.41	
	ORP (mV)	---	---	---	191.6		195.4		153		179.2		192.6	
	DO (mg/L)	---	---	---	3		6.96		7.21		4.2		6.87	

Attachment 2
Groundwater Extraction Well and Groundwater Treatment System Analtyical Data

				LOCATION CODE	GWTS-INF		GWTS-GAC1		GWTS-EFF	
				SAMPLE NO	GWTS-INF-0012		GWTS-GAC1-0012		GWTS-EFF-0012	
				SAMPLE DATE	22-Mar-16		22-Mar-16		22-Mar-16	
				SAMPLE TIME	13;40		13:20		13:00	
				SAMPLE DAY	Tuesday		Tuesday		Tuesday	
				DAY NUMBER	Monthly		Monthly		Monthly	
				SAMPLE PURPOSE	REG		REG		REG	
				LABORATORY	Empirical		Empirical		Empirical	
				LAB DATA DUE	3/30/2016		3/30/2016		3/30/2016	
Chemical Class & Analytical Method	Parameter	Toxicity Characteristics (40 CFR 264.24)	NMED Ground Water Protection Standards (Sec. 20.6.2.3103)	EPA MCLs[a]	Result	LOQ	Result	LOQ	Result	LOQ
Draft Analytical Data										
EDB (ug/L)SW8011	1,2-DIBROMOETHANE	NE	0.1	0.05	0.0756	0.0283	ND	0.0286	ND	0.0282
VOC (ug/L)/ SW8260B	BENZENE	500	10	5	ND	1	ND	1	ND	1
	ETHYLBENZENE	NE	750	700	ND	1	ND	1	ND	1
	TOLUENE	NE	750	1000	ND	1	ND	1	ND	1
	XYLENES	NE	620	10000	ND	3	ND	3	ND	3
Metals (ug/L)/SW6010C	IRON, DISSOLVED	NE	1,000	NE	ND	100	ND	100	ND	100
	MANGANESE, DISSOLVED	NE	200	NE	ND	15	ND	15	ND	15
TDS (mg/L)/SM2540C	TDS	NA	1,000	NE	-	-	-	-	-	-
TSS (mg/L)/SM2540D	TSS	NA	NE	NE	-	-	-	-	-	-
Field Data										
	Temperature (Deg.C)	---	---	---	19.9		19.5		19.5	
	Spec. Conductivity (us/cm)	---	---	---	460		472		473	
	pH	---	---	---	7.57		7.46		7.42	
	ORP (mV)	---	---	---	92.6		74.7		59.2	
	DO (mg/L)	---	---	---	6.29		5.85		6.15	

Attachment 2
Groundwater Extraction Well and Groundwater Treatment System Analtyical Data

Notes:

Laboratory results greater than EPA MCLs or NMED Groundwater Protection Standards are highlighted in yellow.

a = EPA MCLs are from the EPA RSL Table, dated Nov. 2015.

ND = not detected

NE = not established

- = not required

LOQ = Limit of Quantitation

J = analyte was detected at a trace level below the LOQ

ug/L = micrograms per liter

mg/L = milligrams per liter

The concentrations of iron and manganese for day 7 samples (12/31/15 sample date) are reported as total, not dissolved. Samples were not filtered in the field and were collected nitric acid containers.

12/16/15 thru 1/14/16: influent samples were collected from KAFB-106228

Starting 1/21/16: influent samples were collected from KAFB-106228, 106233 and 106234

THIS PAGE INTENTIONALLY LEFT BLANK