ENTERED

DEPARTMENT OF THE AIR FORCE
377TH AIR BASE WING (AFGSC)

Colonel Richard W. Gibbs
377 ABW/CC
2000 Wyoming Blvd SE
Kirtland AFB NM 87117-5000

JUL 15 2017

Mr. John Kieling, Bureau Chief
Hazardous Waste Bureau (HWB)
New Mexico Environment Department (NMED)
2905 Rodeo Park Drive East, Building 1
Santa Fe NM 87505-6303

Dear Mr. Kieling

Attached please find the *Final Design Drawings of the KAFB-106239 Conveyance Line*. This design has been prepared for installation of the KAFB-106239 conveyance line in conjunction with the interim measure groundwater capture and treatment system at ST 106/SS-111, Kirtland AFB, New Mexico. These plans have also been reviewed and approved by the City of Albuquerque (City Engineer) and the U. S. Army Corps of Engineers, Albuquerque District.

If you have any questions or concerns, please contact Ms. Holly O'Grady at (505) 853-3484 or at holly.ogrady@us.af.mil or Mr. Scott Clark at (505) 846-9017 or at scott.clark@us.af.mil.

Sincerely

Richard W. Gibbs

RICHARD W. GIBBS, Colonel, USAF
Commander

cc:
NMED (Borrego) letter
NMED-GWQB (Agnew, Hunter), letter and CD
EPA Region 6 (King, Ellinger), letter and CD
SAF-IEE (Lynnes), electronic only
AFCEC/CZ (Renaghan, Bodour, Clark, O'Grady), electronic only
USACE-ABQ District Office (Simpler, Phaneuf, Dreeland, Sanchez, Salazar), electronic only
Public Info Repository, Administrative Record/Information Repository (AR/IR) and File

KAFB4504

KIRTLAND AIR FORCE BASE
BULK FUELS FACILITY
KAFB - 106239 CONVEYANCE LINE

(NON-POTABLE PRIVATE WATER LINE)

COA PROJECT NO. 586082

MAY 3, 2017

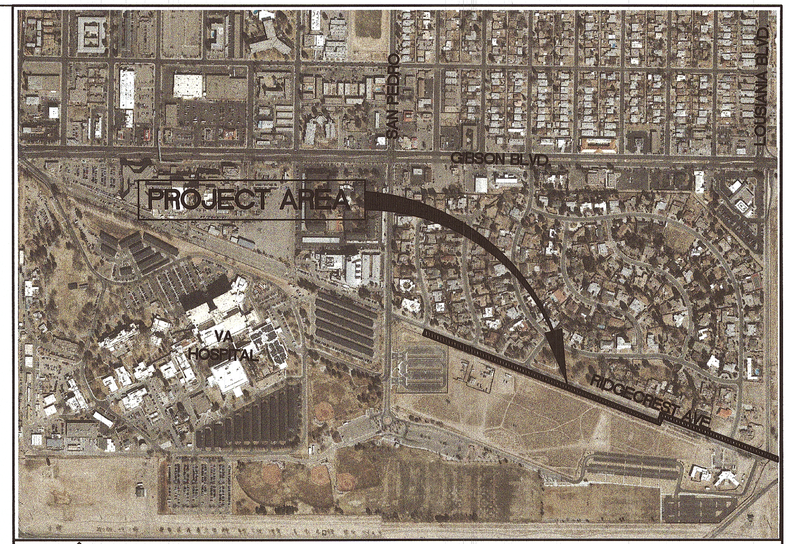

N

S.E. ALBUQUERQUE N.M.

VICINITY MAP
N.T.S.

Sheet Index		FOR INFO. ONLY
Sheet Number	Sheet Title	DRC NUMBER
G-101	PROJECT COVER SHEET	1 OF 27
G-102	GENERAL NOTES	2 OF 27
V-101	TOPOGRAPHIC AND UTILITY SURVEY COVER SHEET	3 OF 27
V-102	TOPOGRAPHIC AND UTILITY SURVEY	4 OF 27
V-103	TOPOGRAPHIC AND UTILITY SURVEY	5 OF 27
V-104	TOPOGRAPHIC AND UTILITY SURVEY	6 OF 27
V-105	TOPOGRAPHIC AND UTILITY SURVEY	7 OF 27
V-106	TOPOGRAPHIC AND UTILITY SURVEY	8 OF 27
C-101	REMOVAL SHEET (BOP) STA :0+00 TO STA 9+00	9 OF 27
C-102	REMOVAL SHEET STA :9+00 TO STA: 18+00	10 OF 27
C-103	REMOVAL SHEET STA :18+00 TO STA: 26+25.60 (EOP)	11 OF 27
C-201	PLAN & PROFILE (BOP) STA: 0+00 TO STA: 4+50	12 OF 27
C-202	PLAN & PROFILE STA: 4+50 TO STA: 9+00	13 OF 27
C-203	PLAN & PROFILE STA: 9+00 TO STA: 13+50	14 OF 27
C-204	PLAN & PROFILE STA: 13+50 TO STA: 18+00	15 OF 27
C-205	PLAN & PROFILE STA: 18+00 TO STA: 22+50	16 OF 27
C-206	PLAN & PROFILE STA: 22+50 TO STA: 26+25.60 (EOP)	17 OF 27
C-301	CIVIL DETAILS	18 OF 27
C-302	CIVIL DETAILS	19 OF 27
C-401	ELECTRICAL EQUIPMENT YARD ENLARGED PLAN	20 OF 27
E-000	SYMBOLS & LEGENDS	21 OF 27
E-001	GENERAL NOTES	22 OF 27
E-201	ELECTRICAL PLAN	23 OF 27
E-301	WELL VAULT SECTION	24 OF 27
E-501	TRANSFORMER & EQUIPMENT RACK DETAIL	25 OF 27
E-502	DETAILS	26 OF 27
E-601	ONE-LINE DIAGRAM	27 OF 27
E-701	VFD WIRING DIAGRAM	28
C-402	ON-BASE ELECTRICAL SITE PLAN	29
S-001	STRUCTURAL GENERAL STRUCTURAL NOTES	30
S-101	STRUCTURAL PLAN AND SECTION	31
S-201	STRUCTURAL DETAILS	32

UTILITY COMPANY CONTACTS

ALBUQUERQUE BERNALILLO COUNTY WATER UTILITY AUTHORITY (WATER & SEWER)
TOM MATTHEWS, PE
Senior Engineer
P.O. Box 568
Albuquerque, New Mexico 87103
(505) 289-3029
tmatthews@abcwua.org

PNM-ELECTRIC
DEREK KASTENDIECK
Distribution Engineer
Commercial/Industrial Services & System Reliability
4201 Edith Blvd., NE MS-ES61
Albuquerque, New Mexico 87107
(505) 241-3631
derek.kastendieck@pnm.com

NEW MEXICO GAS COMPANY
PAULA McAFEE
Project Engineer
4625 Edith Blvd., NE
Albuquerque, New Mexico 87107
(505) 697-6808
pymcafee@tecoenergy.com

CENTURY LINK
ROSARITO KNIFFIN
NM Engineering/Planning
4301 Bogan Ave NE
Albuquerque, New Mexico 87109
(505) 767-7450
rosarito.kniffin@centurylink.com

AT&T
SEAN KELLY
Manager, Network Services
New Mexico
(505) 842-2838
sk1561@att.com

COMCAST CABLE
MIKE MORTUS
Construction Coordinator
Central New Mexico/Mountain West Region
8440 Washington St NE
Albuquerque, NM 87113
(505) 271-3644
mike_mortus@cable.comcast.com

CITY LINK
505 Marquette Ave. NW, Suite 1820
Albuquerque, New Mexico 87102
(505) 938-6300

WINDSTREAM COMMUNICATIONS
RICK MUELLER
Supervisor of Outside Techs.
505 Marquette Ave. NW, Suite 1600
Albuquerque, New Mexico 87102
(505) 217-0038

LEVEL 3 COMMUNICATIONS, LLC
JOHN HUFNAGEL
Outside Plant Engineer II
3830 Singer Blvd NE, Suite 2000
Albuquerque, NM 87109
(505) 938-7322
john.hufnagel@level3.com

VERIZON/MCI
MATT STURGIS
Senior Technician
Mountain States Territory
6001 Midway Park NE
Albuquerque, New Mexico 87109
(505) 348-8613
m.sturgis@verizon.com

811
Know what's below. Call before you dig.
It's the Law!
New Mexico One Call, Inc.
NMOC

REV.	SHEETS	CITY ENGINEER	DATE	USER DEPARTMENT	DATE	USER DEPARTMENT	DATE

ENGINEERS STAMP & SIGNATURE

GEORGE NEMETH NEW MEXICO 12284 REGISTERED PROFESSIONAL ENGINEER
5-3-17

APPROVED	ENGINEER	DATE
DRC Chairman		
Transportation		
Water/Wastewater		
Hydrology		
C I P		
Constr. Mngmt.		
Constr. Coord.		

CITY ENGINEER DATE

City Project No.	Zone Map No.	Drawing No.	Sheet
586082	M-18		1 OF 27 G-101

SMITH ENGINEERING COMPANY
2201 SAN PEDRO NE BLDG 4, SUITE 200
ALBUQUERQUE, NM 87110

GENERAL NOTES:

1 SEVEN (7) WORKING DAYS PRIOR TO BEGINNING CONSTRUCTION, THE CONTRACTOR WILL SUBMIT A DETAILED CONSTRUCTION SCHEDULE TO THE CITY CONSTRUCTION COORDINATION DIVISION. TWO (2) WEEKS PRIOR TO CONSTRUCTION, THE CONTRACTOR SHALL SUBMIT A TRAFFIC CONTROL PLAN TO THE ENGINEER FOR APPROVAL.

2 THE CONTRACTOR WILL NOTIFY THE FIELD ENGINEER NOT LESS THAN SEVEN (7) DAYS PRIOR TO STARTING WORK, IN ORDER THAT THE COA SURVEYOR MAY TAKE NECESSARY MEASURES TO ENSURE THE PRESERVATION OF SURVEY MONUMENTS. THE CONTRACTOR WILL NOTIFY THE COA SURVEYOR IF A MONUMENT IS DISTURBED. REPLACEMENT WILL BE DONE ONLY BY THE CITY OF ALBUQUERQUE SURVEYOR. WHEN A CHANGE IS MADE IN THE FINISHED ELEVATION OF THE PAVEMENT OF ANY ROADWAY IN WHICH A PERMANENT SURVEY MONUMENT IS LOCATED, CONTRACTOR WILL, AT HIS OWN EXPENSE, HAVE THE COA SURVEYOR SECTION ADJUST THE MONUMENT COVER TO THE NEW GRADE UNLESS OTHERWISE SPECIFIED. REFER TO SECTION 4 OF SPECIFICATIONS.

3 THE SPECIFICATIONS USED FOR THIS PROJECT ARE THE CITY OF ALBUQUERQUE STANDARD SPECIFICATIONS FOR PUBLIC WORKS CONSTRUCTION, 1986 EDITION THROUGH UPDATE NO. 9 INCLUDING ALL SUBSEQUENT UPDATES AND AMENDMENTS.

4 ALL NEW MANHOLES SHALL BE TYPE "C" PER CITY OF ALBUQUERQUE STANDARD DRAWINGS 2101 UNLESS OTHERWISE NOTED ON THE PLANS. ALL MANHOLES SHALL INCLUDE PLACEMENT OF EMD'S.

5 THE CONTRACTOR WILL BE RESPONSIBLE FOR DISPOSING OF ALL DEBRIS, INCLUDING, BUT NOT LIMITED TO HAZARDOUS WASTE AT DISPOSAL SITES APPROVED BY GOVERNMENTAL AGENCIES REGULATING THE DISPOSAL OF SUCH MATERIALS.

6 ALL EXISTING WATER VALVE BOXES AND MANHOLES IN THE STREET CONSTRUCTION ARE TO BE ADJUSTED TO FINISH GRADE AND WILL BE MEASURED AND PAID PER EACH. ADJUSTMENT WORK SHALL INCLUDE EMD, NEW CONCRETE COLLAR, NEW RING AND COVER.

7 SUBGRADE PREPARATION UNDER SIDEWALKS AND DRIVE PADS, AND SUBGRADE AND SUBBASE PREPARATION UNDER CURB AND GUTTER IS CONSIDERED INCIDENTAL TO THE CONSTRUCTION OF SUCH, AND NO DIRECT PAYMENT SHALL BE MADE FOR THOSE ITEMS OF WORK.

8 ALL EXCAVATION WILL BE GOVERNED BY FEDERAL, STATE AND LOCAL LAWS, RULES, AND REGULATIONS CONCERNING CONSTRUCTION SAFETY AND HEALTH.

9 ALL SIGNS AND PAVEMENT MARKINGS WILL BE IN ACCORDANCE WITH THE "MANUAL ON UNIFORM TRAFFIC CONTROL DEVICES FOR STREETS AND HIGHWAYS" CURRENT EDITION PUBLISHED BY THE U.S. DEPARTMENT OF TRANSPORTATION.

10 THE CONTRACTOR IS TO EXERCISE CARE TO AVOID DISTURBING ANY EXISTING UNDERGROUND UTILITIES. IT WILL BE HIS RESPONSIBILITY TO COORDINATE WITH THE UTILITY COMPANIES IN ORDER TO PREVENT ANY SERVICE DISRUPTION. SEE SECTION 18 "UTILITIES", CITY OF ALBUQUERQUE, STANDARD SPECIFICATIONS FOR CONTRACTOR REQUIREMENTS.

11 WHEN ABUTTING NEW PAVEMENT TO EXISTING PAVEMENT, SAW CUT EXISTING PAVEMENT TO A STRAIGHT LINE AND AT RIGHT ANGLES AND REMOVE ANY BROKEN OR CRACKED PAVEMENT. NO DIRECT PAYMENT WILL BE MADE FOR SAW CUTTING.

12 ALL GAS VALVES, GAS MANHOLES, ELECTRICAL MANHOLES, TELEPHONE MANHOLES, AND UTILITY POLES WILL BE ADJUSTED TO GRADE BY EACH UTILITY COMPANY. CONTRACTOR WILL COORDINATE THROUGH CITY UTILITY COORDINATOR.

13 WHEN REMOVAL OF EXISTING CURB AND GUTTER OR SIDEWALK IS REQUIRED, REMOVE BACK TO NEAREST SUITABLE JOINT UNLESS OTHERWISE DIRECTED BY THE CONSTRUCTION ENGINEER.

14 THE CONTRACTOR WILL NOTIFY NEW MEXICO ONE CALL SYSTEM (260–1990).

15 CONTRACTOR WILL PLACE BITUMINOUS MATERIAL WITH THE USE OF A LAYDOWN MACHINE WHERE PAVEMENT IS 8 FEET IN WIDTH OR WIDER.

16 CONTRACTOR WILL NOT PAVE OVER ANY SURFACE FEATURE, I.E., GAS VALVE, MANHOLE COVER, ETC.

17 CONTRACTOR WILL CONFINE HIS WORK WITHIN THE CONSTRUCTION EASEMENT LIMITS AND/OR RIGHT–OF–WAY, OR PROVIDE COPIES OF AGREEMENTS WITH ADJACENT LANDOWNERS TO THE CITY OF ALBUQUERQUE.

18 MINIMUM BOTTOM WIDTH OF TRENCHES FOR RIGID PIPE SHALL BE EQUAL TO THE OUTSIDE DIAMETER PLUS 24 INCHES. BEDDING MATERIAL SHALL BE CLASS II, III, OR IV UNLESS OTHERWISE SPECIFICALLY NOTED ON THE PLANS.

19 MINIMUM BOTTOM WIDTH OF TRENCHES FOR NON–RIGID PIPE SHALL BE EQUAL TO THE OUTSIDE DIAMETER PLUS 18 INCHES. BEDDING MATERIAL SHALL BE CLASS I, II, OR III.

20 THE CONTRACTOR AGREES TO TAKE NECESSARY SAFETY PRECAUTIONS AS REQUIRED BY FEDERAL, STATE AND LOCAL AUTHORITIES TO PROTECT PEDESTRIAN AND VEHICULAR TRAFFIC IN THE CONSTRUCTION AREA, WHICH INCLUDE BUT ARE NOT LIMITED TO: MAINTAINING ADEQUATE WARNING SIGNS, BARRICADES, LIGHTS, GUARD FENCES, WALKS AND BRIDGES.

21 THE CONTRACTOR SHALL CONSTRUCT CITY OF ALBUQUERQUE STANDARD WHEELCHAIR RAMPS THAT CONFORM TO CURRENT ADA REQUIREMENTS.

22 PRIOR TO CONSTRUCTION, THE CONTRACTOR WILL EXCAVATE AND VERIFY THE HORIZONTAL AND VERTICAL LOCATIONS OF ALL POTENTIAL CONFLICTING UTILITIES. SHOULD A CONFLICT EXIST BETWEEN THE FIELD INFORMATION AND THE PLANS, THE CONTRACTOR WILL NOTIFY THE ENGINEER SO THE CONFLICT CAN BE RESOLVED WITH MINIMUM AMOUNT OF DELAY.

23 THE REPLACEMENT OF THE EXISTING UTILITIES AND THE INSTALLATION OF NEW UTILITY LINES WILL BE COMPLETED IN ADVANCE OF STARTING THE PAVEMENT WORK. TEMPORARY PAVEMENT WILL BE PLACED IN ALL TRENCHES REQUIRED FOR THE UTILITY REPLACEMENTS IN THOSE AREAS THAT MUST MAINTAIN TRAFFIC UNTIL THE FINAL PAVEMENT WORK STARTS IN EACH AREA. TEMPORARY STRIPING SHALL BE THE CONTRACTOR'S RESPONSIBILITY. MAINTENANCE OF THE TEMPORARY PAVING AND STRIPING WILL BE AT THE CONTRACTOR'S EXPENSE.

24 TACK COAT FOR SURFACE COURSE REQUIREMENTS WILL BE DETERMINED BY THE CONSTRUCTION ENGINEER.

25 BACKFILL COMPACTION SHALL BE ACCORDING TO SPECIFIED USE.

26 ALL NEW PAVING, DRIVEWAYS, SIDEWALKS, AND CURB AND GUTTERS, ABUTTING EXISTING AREAS SHALL MATCH THE ELEVATION OF THOSE AREAS.

27 PERMANENT PAVEMENT STRIPING AND MARKINGS WILL BE PLACED BY THE CONTRACTOR. ROAD SHALL NOT BE OPENED TO TRAFFIC UNTIL IT IS STRIPED. ALL STRIPING, PAVEMENT MARKINGS INCLUDING CROSSWALKS, ARROWS AND LINE MARKINGS ARE TO BE CONSTRUCTED OF PAINT IN ACCORDANCE WITH THE MANUAL ON UNIFORM TRAFFIC CONTROL DEVICES.

28 ALL EXCAVATED MATERIAL THAT IS NOT REQUIRED TO BE REUSED MUST BE REMOVED FROM THE PROJECT AREA WITHIN FOUR DAYS OF EXCAVATION. SPOIL PILES WILL BE ALLOWED ONLY AS DIRECTED BY THE ENGINEER.

29 THE CONTRACTOR WILL COORDINATE THE CONSTRUCTION ACTIVITIES WITH ALL OTHER CONTRACTORS AND UTILITY COMPANIES WORKING IN THE SAME AREA. THE CONTRACTOR MAY BE REQUIRED TO RESCHEDULE THEIR ACTIVITIES TO ALLOW UTILITY CREWS TO PERFORM THEIR REQUIRED WORK. NO ADDITIONAL COMPENSATION WILL BE ALLOWED FOR DELAYS OR INCONVENIENCE CAUSED BY UTILITY COMPANY WORK CREWS. A CONTRACT EXTENSION MAY BE ALLOWED AS DELINEATED IN CITY OF ALBUQUERQUE STANDARD SPECIFICATIONS.

30 EXISTING CURB AND GUTTER, NOT DISTURBED BY CONTRACTOR, BUT OUT OF ALIGNMENT, DISPLACED VERTICALLY, BADLY BROKEN AND/OR DETERIORATED, WILL BE REPLACED AS DIRECTED BY THE CONSTRUCTION ENGINEER AND PAID FOR AT CONTRACT UNIT PRICES.

31 ALL TRAFFIC CONTROL DEVICES REQUIRED FOR DRIVEWAY CLOSURES, UTILITY CONSTRUCTION OR FOR OTHER REASONS AND NOT SHOWN ON THE SIGNING PLANS WILL BE FURNISHED BY THE CONTRACTOR. PRIOR TO PLACING THE TRAFFIC CONTROL DEVICES, THE CONTRACTOR WILL NOTIFY THE AFFECTED OWNERS IN ACCORDANCE WITH THE SPECIFICATIONS. CONTRACTOR MUST MAKE PROVISIONS TO PROVIDE ACCESS TO PROPERTIES. REFER TO SECTION 19 OF THE SPECIFICATIONS.

32 ALL UTILITY LINES WHICH ARE NOT SPECIFICALLY DESIGNATED TO BE REMOVED AND REPLACED ON THE PLANS, WILL BE MAINTAINED IN SERVICE. SHORING, SHEETING AND OTHER MEANS OF SUPPORT SHALL BE EMPLOYED BY THE CONTRACTOR TO PREVENT DAMAGE OR LOSS OF THESE EXISTING UTILITIES. BEAM AND CABLE OR OTHER ADEQUATE SUPPORTS WILL BE USED FOR TEMPORARY SUPPORT OF ALL UTILITY LINES WHICH CROSS THE TRENCH. ANY DAMAGE TO EXISTING UTILITIES WILL IMMEDIATELY AND WITHOUT DELAY BE REPAIRED AT THE CONTRACTOR'S EXPENSE. THE CONTRACTOR WILL NOTIFY THE ENGINEER IMMEDIATELY OF ANY SIGNIFICANT DEVIATION OF EXPOSED UTILITIES FROM THE LOCATIONS SHOWN ON THE PLANS SO THAT CONFLICTS CAN BE RESOLVED IN A TIMELY MANNER.

33 THE CONTRACTOR WILL ASSUME RESPONSIBILITY FOR ANY DAMAGE TO EXISTING COA AND EXPO NEW MEXICO INFRASTRUCTURE (C & G, PAVING, ETC.) DURING CONSTRUCTION, APART FROM THOSE SECTIONS INDICATED FOR REMOVAL ON THE PLANS, AND WILL REPAIR OR REPLACE SAME AT HIS OWN EXPENSE. HE WILL SUITABLY PROTECT THE CURB AND GUTTER FROM INCIDENTAL SPLASHING DURING THE TACK COAT APPLICATION AND WILL BE RESPONSIBLE FOR CLEANING SAME AT HIS OWN COST SHOULD SPLASHING OCCUR.

34 ALL INTERFERING PORTIONS OF ABANDONED UTILITY LINES WHICH ARE EXPOSED AS A RESULT OF CONSTRUCTION WILL BE REMOVED AND DISPOSED OF BY THE CONTRACTOR. THIS WORK SHALL BE CONSIDERED INCIDENTAL TO CONSTRUCTION.

35 SHORING COSTS WILL BE CONSIDERED INCIDENTAL TO THE TRENCH AND BACKFILL COSTS.

36 THE CONTRACTOR WILL BE RESPONSIBLE FOR SECURING NPDES PERMITS REQUIRED BY APPLICABLE CITY, STATE, AND FEDERAL REGULATIONS.

37 THE TERM "REMOVE" USED IN THIS PLAN SET INCLUDES THE DISPOSAL OF SAID MATERIAL IN ACCORDANCE WITH CITY OF ALBUQUERQUE SPECIFICATIONS, LATEST EDITION, THROUGH UPDATE 9.

38 THE CONTRACTOR SHALL BE RESPONSIBLE FOR PROVIDING AND MAINTAINING ALL CONSTRUCTION SIGNING UNTIL PROJECT HAS BEEN ACCEPTED BY THE CITY OF ALBUQUERQUE.

39 ALL REINFORCING STEEL TO BE GRADE 60 UNLESS OTHERWISE NOTED ON PLANS.

40 STATIONS OF STORM DRAIN INLETS ARE TO THE CENTER OF GRATE AT FLOWLINE.

41 ALL STORM DRAIN AND CONNECTOR PIPE WILL BE CLASS IV REINFORCED CONCRETE PIPE UNLESS OTHERWISE NOTED ON THE PLANS.

42 EXCESS EXCAVATION REQUIRED TO CONSTRUCT THE PROJECT THAT DOES NOT HAVE A CORRESPONDING BID ITEM (ie: EXCAVATION OF SUBGRADE OR DIRT) SHALL BE REMOVED AND DISPOSED OF AT NO ADDITIONAL COST TO THE OWNER AND WILL BE CONSIDERED INCIDENTAL TO CONSTRUCTION.

43 EXCAVATION, TRENCHING AND SHORING ACTIVITIES MUST BE CARRIED–OUT IN ACCORDANCE WITH OSHA 29 CFR 1926.650, SUBPART P.

44 CONTRACTOR IS ADVISED TO VISIT THE PROJECT SITE PRIOR TO BIDDING AND FAMILIARIZE THEMSELVES WITH FIELD CONDITIONS INCLUDING THE LOCATION OF UTILITIES SHOWN ON THE PLANS AND OTHER UTILITIES/ OBSTACLES CLEARLY VISIBLE IN THE FIELD.

45 ALL DISTURBED GROUND AREAS SHALL BE REVEGETATED IN ACCORDANCE WITH CITY OF ALBUQUERQUE STANDARD SPECIFICATIONS FOR PUBLIC WORKS CONSTRUCTION, SECTION 1012 NATIVE GRASS SEEDING, AS REVISED THROUGH UPDATE 9.

46 REMOVAL AND DISPOSAL OF EXISTING ASBESTOS PIPE MATERIAL SHALL COMPLY WITH ALL APPLICABLE LOCAL, STATE AND FEDERAL GOVERNMENTAL LAWS AND REGULATIONS. THE CONTRACTOR WILL BE RESPONSIBLE FOR DISPOSING OF ALL ASBESTOS PIPE MATERIAL AT DISPOSAL SITES APPROVED BY GOVERNMENTAL AGENCIES REGULATING THE DISPOSAL OF SUCH MATERIAL.

47 ALL NEW STORM INLETS SHALL BE TYPE "A" PER CITY OF ALBUQUERQUE STANDARD DRAWINGS 2201 AND 2202 UNLESS OTHERWISE NOTED ON THE PLANS. ALL STORM INLET GRATES SHALL CONFORM TO CITY OF ALBUQUERQUE STANDARD DRAWING 2220.

48 IF A PAVEMENT DROP–OFF IS CREATED DURING CONSTRUCTION, THE CONTRACTOR SHALL INITIATE PROTECTIVE MEASURES TO PREVENT ABRUPT DROP–OFFS. THIS WORK SHALL BE CONSIDERED INCIDENTAL TO CONSTRUCTION.

49 THE CONTRACTOR SHALL COORDINATE WITH THE WATER AUTHORITY SEVEN (7) DAYS IN ADVANCE OF PERFORMING WORK THAT WILL AFFECT THE PUBLIC WATER OR SANITARY SEWER INFRASTRUCTURE. WORK REQUIRING SHUTOFF OF FACILITIES DESIGNATED AS MASTER PLAN FACILITIES MUST BE COORDINATED WITH THE WATER AUTHORITY 14 DAYS IN ADVANCE OF PERFORMING SUCH WORK. ONLY WATER AUTHORITY CREWS ARE AUTHORIZED TO OPERATE PUBLIC VALVES. SHUTOFF REQUESTS MUST BE MADE ONLINE AT http:/abcwua.org/content/view/463/729/.

50 ELECTRONIC MARKER DEVICES (EMD) WILL BE PLACED ACCORDING TO SECTION 170 OF THE CITY OF ALBUQUERQUE STANDARD SPECIFICATIONS FOR PUBLIC WORKS CONSTRUCTION, 1986 EDITION AS REVISED THROUGH UPDATE 9. PROVIDING AND INSTALLATION OF EMD'S SHALL BE CONSIDERED INCIDENTAL TO CONSTRUCTION. NO SEPARATE OR ADDITIONAL PAYMENT WILL BE MADE FOR EMDS.

51 NO STEPS SHALL BE INSTALLED ON ANY NEW SAS MANHOLES.

52 CONTRACTOR SHALL BE RESPONSIBLE FOR LOCATING ALL STORM DRAIN CONFLICTS DURING CONSTRUCTION.

53 IN THE CASE OF A CONFLICT BETWEEN CONDUIT OR EQUIPMENT PLACEMENT AND STORM DRAIN, CONTRACTOR SHALL INFORM THE CONSTRUCTION ENGINEER BEFORE PROCEEDING WITH ANY DEVIATIONS FROM PLANS.

54 SHOULD ANY IMPACT OCCUR TO STORM DRAIN PIPE DURING CONSTRUCTION EFFORTS, THE CONTRACTOR SHALL BE RESPONSIBLE FOR CONTACTING THE CITY OF ALBUQUERQUE STORM DRAIN MAINTENANCE TO INSPECT THE IMPACTED PIPE.

55 REPAIRS TO IMPACTED PIPE REQUIRED BY THE CITY OF ALBUQUERQUE STORM DRAIN MANAGEMENT PERSONNEL SHALL BE THE FINANCIAL AND CONSTRUCTION RESPONSIBILITY OF THE CONTRACTOR.

56 RCP SHALL BE INSTALLED SO THAT THE JOINT GAP AT THE HOME POSITION SHALL CONFORM TO THE APPROVED MANUFACTURER'S RECOMMENDATIONS. MANUFACTURER'S RECOMMEND JOINING GAP TOLERANCES FOR EACH PIPE SIZE AND TYPE SHALL BE SUBMITTED TO THE ENGINEER FOR APPROVAL PRIOR TO PLACEMENT OF PIPE. RCP JOINT SHALL NOT BE GROUTED UNLESS DIRECTED BY THE ENGINEER AFTER APPROVAL.

57 AN SO–19 PERMIT IS REQUIRED TO PLACE ANY MATERIAL ON OR AROUND A STORM DRAIN INLET IN THE CITY RIGHT–OF–WAY THAT WOULD INTERFERE WITH THE INLET RECEIVING STORM WATER PER THE ENGINEER'S DESIGN. CITY PERSONNEL MAY REMOVE THIS MATERIAL AT ANY TIME WITHOUT NOTICE. THE PREFERRED BMP IS TO REMOVE SEDIMENT/POLLUTANTS ON THE PROPERTY WHERE CONSTRUCTION ACTIVITY IS OCCURRING.

58 THE CONTRACTOR MUST MAINTAIN CONTINUOUS ACCESS TO ALL BUSINESSES AND PRIVATE PROPERTY DURING THE COURSE OF CONSTRUCTION. THIS APPLIES TO BOTH VEHICLES AND PEDESTRIANS, INCLUDING ADA ACCESS (WHERE APPLICABLE). THIS WORK SHALL BE CONSIDERED INCIDENTAL TO CONSTRUCTION.

59 ANY SHORING THE CONTRACTOR DECIDES TO USE AS PART OF CONSTRUCTION SHALL BE CONSIDERED INCIDENTAL TO CONSTRUCTION AND NO ADDITIONAL OR SEPERATE PAYMENT FOR ANY SHORING WORK WILL BE MADE.

SPECIAL NOTE:

PROVIDE FLEXIBLE POST UTILITY MARKERS AT 300' INTERVALS AND ALL CHANGES IN PIPELINE DIRECTION. FLEXIBLE POST TO BE 6' LONG X 4" WIDE NOMINAL SIZE, FIBERGLASS CONSTRUCTION. USE VINYL LABELS READING: "WARNING: BURIED PRIVATE, NON–POTABLE WATER" USE POSTS MANUFACTURED BY WILLIAM FRICK & CO., FLEXPOST, OR ACCEPTED EQUAL PRODUCT.

COA PROJECT NO: 586082

Design Review Committee	City Engineer Approval	Last Design Update	No. / Day / Yr.	No. / Day / Yr.

GEORGE NEMETH NEW MEXICO 12284 REGISTERED PROFESSIONAL ENGINEER
5-3-17

NO.	REVISION DESCRIPTION	DATE	BY
5			
4			
3			
2			
1			

Name
Location

KIRTLAND AIR FORCE BASE
BULK FUELS FACILITY
KAFB - 106239 CONVEYANCE LINE

GENERAL NOTES

SMITH ENGINEERING COMPANY
2201 SAN PEDRO NE BLDG 4, SUITE 200
ALBUQUERQUE, NM 87110

JOB NO: 116112
DATE: MAY 3, 2017
SHEET NO: G-102 / 2 OF 27

Q:\SEC——PROJECTS\116112 KAFB Groundwater Reclaim Pipeline\ENGINEERING\CADD\PLANSET\G-102 GENERAL NOTES.dwg May 30, 2017 – 7:58am Saved By: jerrisp

VICINITY MAP M-18

SCALE: 1"=750'

DESCRIPTION

THE PUBLIC RIGHT-OF-WAY OF RIDGECREST DRIVE S.E. BETWEEN RIDGECREST LOOP S.E. AND LOUISIANA BOULEVARD S.E., ALBUQUERQUE, NEW MEXICO.

GENERAL NOTES

1. A TOPOGRAPHIC AND UTILITY SURVEY WAS PERFORMED IN OCTOBER, 2016. THIS IS NOT A BOUNDARY SURVEY, PROPERTY INFORMATION IS SHOWN FOR ORIENTATION ONLY. THE SCREENED BOUNDARY DATA SHOWN IS BASED UPON A PRELIMINARY PROPERTY INVESTIGATION PREPARED BY THIS FIRM DATED AUGUST, 2016.
2. ALL DISTANCES ARE GROUND DISTANCES.
3. SITE LOCATED WITHIN SECTION 36, TOWNSHIP 10 NORTH, RANGE 3 EAST, N.M.P.M.
4. UTILITY INFORMATION SHOWN HEREON IS BASED UPON ONSITE SURFACE EVIDENCE, REVIEW OF AVAILABLE CITY OF ALBUQUERQUE DISTRIBUTION MAPS, REVIEW OF PNM, NEW MEXICO GAS COMPANY AND CENTURYLINK AVAILABLE DOCUMENTS AND UTILITY LINE-SPOTS PROVIDED BY HIGH MESA CONSULTING GROUP (2016.030.2-SITE UTILITY DIAGRAM DATED 10-11-2016). IN ADDITION, UTILITY LINE-SPOTS WERE REQUESTED VIA THE NEW MEXICO ONE CALL SERVICE (TICKET # 16SE280041). UTILITY LINES SHOWN ON THIS DRAWING ARE SHOWN IN AN APPROXIMATE MANNER ONLY AND SUCH LINES MAY EXIST WHERE NONE ARE SHOWN. IF ANY SUCH EXISTING LINES ARE SHOWN, THE LOCATION IS BASED UPON INFORMATION PROVIDED BY THE OWNER OF SAID UTILITY, AND THE INFORMATION MAY BE INCOMPLETE, OR MAY BE OBSOLETE BY THE TIME CONSTRUCTION COMMENCES. THE SURVEYOR HAS CONDUCTED ONLY PRELIMINARY INVESTIGATION OF THE LOCATION, DEPTH, SIZE, OR TYPE OF EXISTING UTILITY LINES, PIPELINES, OR UNDERGROUND UTILITY LINES. THIS INVESTIGATION IS NOT CONCLUSIVE, AND MAY NOT BE COMPLETE, THEREFORE, MAKES NO REPRESENTATION PERTAINING THERETO, AND ASSUMES NO RESPONSIBILITY OR LIABILITY THEREFOR. THE PROPERTY OWNER, DEVELOPER, OR CONTRACTOR SHALL INFORM ITSELF OF THE LOCATION OF ANY UTILITY LINE, PIPELINE, OR UNDERGROUND UTILITY LINE IN OR NEAR THE AREA OF THE WORK IN ADVANCE OF AND DURING EXCAVATION WORK. THE PROPERTY OWNER, DEVELOPER, OR CONTRACTOR IS FULLY RESPONSIBLE FOR ANY AND ALL DAMAGE CAUSED BY ITS FAILURE TO LOCATE, IDENTIFY AND PRESERVE ANY AND ALL EXISTING UTILITIES, PIPELINES, AND UNDERGROUND UTILITY LINES. IN PLANNING AND CONDUCTING EXCAVATION, THE CONTRACTOR SHALL COMPLY WITH STATE STATUTES, MUNICIPAL AND LOCAL ORDINANCES, RULES AND REGULATIONS, IF ANY, PERTAINING TO THE LOCATION OF THESE LINES AND FACILITIES.

CONTROL SURVEY NOTE

A CONTROL SURVEY WAS CONDUCTED AT THE SITE ON JULY 13, 2016 AND VERIFIED ON OCTOBER 03, 2016. CONTROL WAS PROJECTED ONTO THE SUBJECT SITE UTILIZING RTK GPS OBSERVATIONS COMBINED WITH NGS COAJUL08 MODEL TO ESTABLISH HORIZONTAL AND VERTICAL POSITIONS BASED UPON NAD83/NAVD 88 DATUM. THE RTK OBSERVATIONS WERE USED TO ESTABLISH THE ELEVATIONS FOR THE CONTROL POINTS AND BENCHMARKS AT THE PROJECT SITE.

THE POINTS OBSERVED HAVE BEEN QUALITY CONTROLLED FOR RELATIVE ACCURACY. ALL HORIZONTAL COORDINATES ARE MODIFIED NAD 83 GRID VALUES AND HAVE BEEN ADJUSTED TO THE GROUND AT THE PROJECTION POINT (THE SCALE FACTOR USED IS 1/CF=1.00034087). THE PROJECTION POINT USED FOR THIS PROJECT IS A.G.R.S. "1-M18" WITH NAD 83 GRID COORDINATES OF:
NORTHING= 1,475,270.293
EASTING= 1,543,374.499
ELLIPSOID HEIGHT= 5271.00 FEET.
THE ELEVATIONS ARE BASED UPON THE NAVD 88 DATUM AND REQUIRE NO FURTHER ADJUSTMENT.

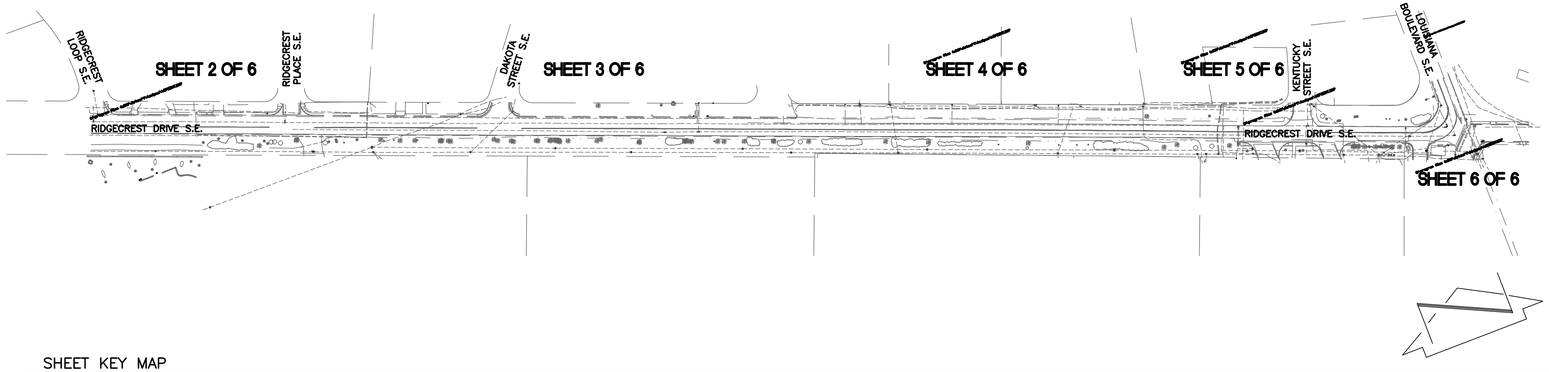

SHEET KEY MAP

NOT TO SCALE

BENCHMARKS

PROJECT BENCHMARK

A NMSHC BRASS DISK STAMPED "STA. G-2" SET IN TOP OF CONCRETE POST FLUSH WITH THE GROUND, IN THE WESTERN MEDIAN, NEAR THE INTERSECTION OF GIBSON BOULEVARD S.E. AND LOUISIANA BOULEVARD S.E.
ELEVATION = 5337.43 FEET (NAVD 1988)

TEMPORARY BENCHMARK #1 (T.B.M.)

A MAG NAIL W/WASHER SET IN ASPHALT ON THE SOUTH SIDE OF RIDGECREST DRIVE S.E., AS SHOWN ON SHEET 2.
ELEVATION = 5332.77 FEET (NAVD 1988)

TEMPORARY BENCHMARK #2 (T.B.M.)

A MAG NAIL W/WASHER SET IN CONCRETE NEAR THE SOUTHWEST QUADRANT OF THE INTERSECTION OF RIDGECREST DRIVE S.E. AND DAKOTA STREET S.E., AS SHOWN ON SHEET 3.
ELEVATION = 5340.94 FEET (NAVD 1988)

TEMPORARY BENCHMARK #3 (T.B.M.)

A MAG NAIL W/WASHER SET IN TOP OF CONCRETE CURB ON THE NORTH SIDE OF RIDGECREST DRIVE S.E., AS SHOWN ON SHEET 4.
ELEVATION = 5353.72 FEET (NAVD 1988)

TEMPORARY BENCHMARK #4 (T.B.M.)

A MAG NAIL W/WASHER SET IN ASPHALT NEAR THE SOUTHEAST QUADRANT OF THE INTERSECTION OF RIDGECREST DRIVE S.E. AND LOUISIANA BOULEVARD S.E., AS SHOWN ON SHEET 6.
ELEVATION = 5364.68 FEET (NAVD 1988)

FOR INFORMATION ONLY

SURVEYORS CERTIFICATION

I, JOSEPH M. SOLOMON, JR., NEW MEXICO PROFESSIONAL SURVEYOR NO. 15075, DO HEREBY CERTIFY; THAT THIS TOPOGRAPHIC AND UTILITY SURVEY AND THE ACTUAL SURVEY ON THE GROUND UPON WHICH IT IS BASED WERE PERFORMED BY ME OR UNDER MY DIRECT SUPERVISION; THAT THE SURVEY SHOWS ALL EASEMENTS MADE KNOWN TO ME BY THIS OWNER, UTILITY COMPANIES, OR OTHER PARTIES EXPRESSING AN INTEREST; THAT THIS SURVEY MEETS THE MINIMUM STANDARDS FOR SURVEYING IN NEW MEXICO, AND THAT IT IS TRUE AND CORRECT TO THE BEST OF MY KNOWLEDGE AND BELIEF.

JOSEPH M. SOLOMON, JR., NMPS 15075 DATE

File Path: P:\DATA\2016\2016.030.2\SUR\ | Plot Date: 10-24-2016
File Name: 160302_TOPO1.DWG | Plot Time: 1:02 pm

COVER SHEET

EA ENGINEERING - KAFB BFF - RIDGECREST DRIVE GEP CORRIDOR

SURVEYED BY R.C.W./J.M.T.
DRAWN BY T.N.T.
APPROVED BY J.M.S.

NO.	DATE	BY	REVISIONS

JOB NO. 2016.030.2
DATE 10-2016
SHEET 1 OF 6
V-101 / 3 OF 27

TEMPORARY BENCHMARK #1 (T.B.M.)

A MAG NAIL W/WASHER SET IN ASPHALT ON THE SOUTH SIDE OF RIDGECREST DRIVE S.E., AS SHOWN ON THIS SHEET.
ELEVATION = 5332.77 FEET (NAVD 1988)

NOT TO SCALE

20 0 40
10 20

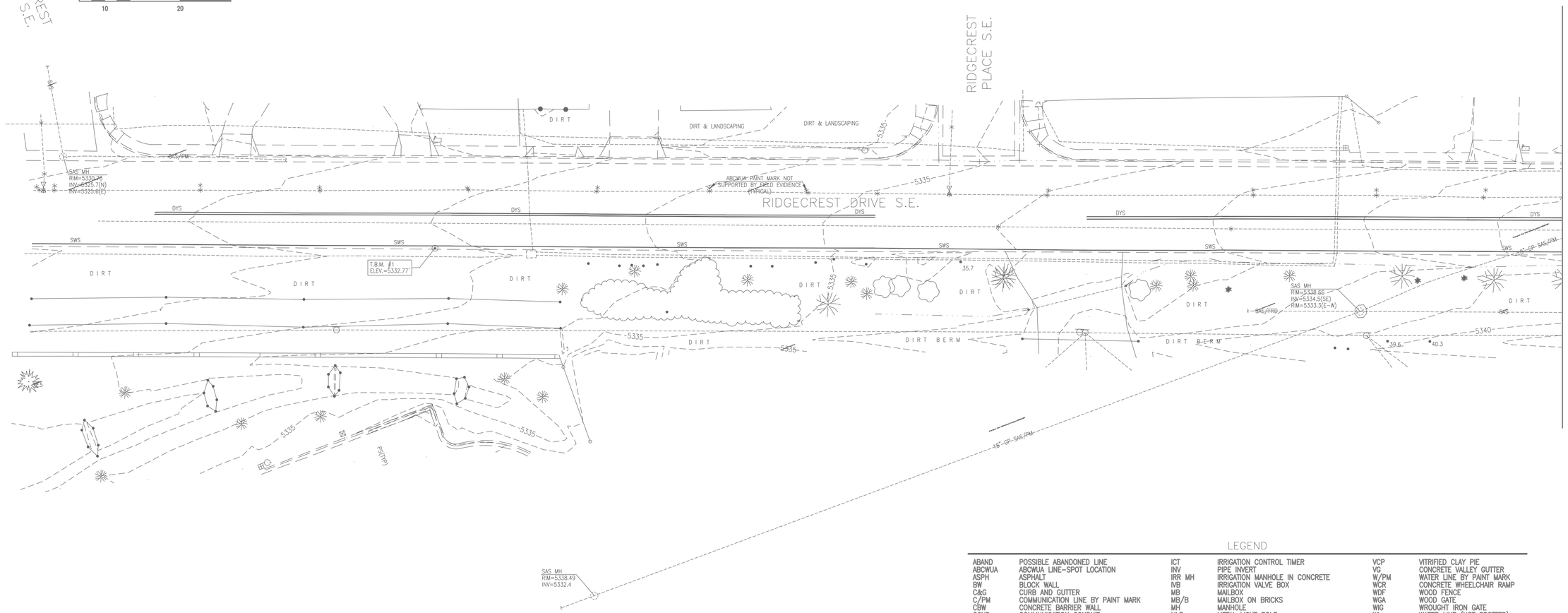

LEGEND

ABAND	POSSIBLE ABANDONED LINE
ABCWUA	ABCWUA LINE-SPOT LOCATION
ASPH	ASPHALT
BW	BLOCK WALL
C&G	CURB AND GUTTER
C/PM	COMMUNICATION LINE BY PAINT MARK
CBW	CONCRETE BARRIER WALL
CCND	COMMUNICATION CONDUIT
CDP	CONCRETE DRIVE PAD
CF	LANDSCAPING CRUSHER FINES
CHC	CONCRETE HEADER CURB
CI	CAST IRON PIPE
CLF	CHAIN LINK FENCE
CLF/BW	CHAIN LINK FENCE WITH BARBED WIRE
CMR	COMMUNICATION RISER
CMU	CONCRETE MASONRY UNIT WALL
CND	ELECTRIC CONDUIT
CONC	CONCRETE
CP	CONCRETE PIPE
CPB	COMMUNICATION PULLBOX
CSW	CONCRETE SIDEWALK
D/W	CONCRETE DRIVEWAY
DBL	DOUBLE
DPG	DOUBLE PIPE GATE
DWS	PAINTED DASHED WHITE TRAFFIC STRIPE
DYS	PAINTED DOUBLE YELLOW TRAFFIC STRIPE
E/PM	ELECTRIC LINE BY PAINT MARK
EA	EDGE OF ASPHALT
EPB	ELECTRIC PULLBOX
FH	FIRE HYDRANT
FL	FLOWLINE
FO/PM	FIBER OPTIC LINE BY PAINT MARK
FRD	UTILITY FROM COA DISTRIBUTION MAPS
G/PM	GAS LINE BY PAINT MARK
GA	GATE
GRV	LANDSCAPING GRAVEL
GVB	GAS VALVE BOX
GW	GUY WIRE ANCHOR
HDPE	HIGH DENSITY POLYETHYLENE PIPE

ICT	IRRIGATION CONTROL TIMER
INV	PIPE INVERT
IRR MH	IRRIGATION MANHOLE IN CONCRETE
IVB	IRRIGATION VALVE BOX
MB	MAILBOX
MB/B	MAILBOX ON BRICKS
MH	MANHOLE
MLP	METAL LIGHT POLE
MSN	METAL SIGN (GENERAL)
MTC	METAL TRASH CAN
OHC(2)	OVERHEAD COMMUNICATION (# OF LINES)
OHE(2)	OVERHEAD ELECTRIC (# OF LINES)
PBAR	PIPE BARRIER
PIV	POST INDICATOR VALVE
PS	PAINTED PARKING STRIPE
PVC	POLYVINYL CHLORIDE PIPE
R/PM	REUSE WATER LINE BY PAINT MARK
RCP	REINFORCED CONCRETE PIPE
RR	LANDSCAPING RIVER ROCK (DRAINAGE)
RRT	LANDSCAPING RAILROAD TIES
RWV	REUSE WATER VAULT
SAS	SANITARY SEWER
SAS/PM	SANITARY SEWER PIPE BY PAINT MARK
SD	STORM DRAIN
SD/PM	STORM DRAIN PIPE BY PAINT MARK
SDI	STORM DRAIN INLET
SDP	SERVICE DROP POLE
SGP	STEEL GUARD POST
SP	STEEL POST
SSG	SLIDING STEEL GATE
STW	STUCCO WALL
STW/WI	STUCCO WALL WITH WROUGHT IRON FENCE
SWS	PAINTED SOLID WHITE TRAFFIC STRIPE
TA	TOP OF ASPHALT
TC	TOP OF CURB
TCO	TOP OF CONCRETE
TG	TOP OF GRATE
TRN	ELECTRIC TRANSFORMER
TS	TRAFFIC SIGN
TV/PM	CABLE TELEVISION LINE BY PAINT MARK
TVCAB	CABLE TELEVISION CABINET
TVR	CABLE TELEVISION RISER
TYP	TYPICAL

VCP	VITRIFIED CLAY PIE
VG	CONCRETE VALLEY GUTTER
W/PM	WATER LINE BY PAINT MARK
WCR	CONCRETE WHEELCHAIR RAMP
WDF	WOOD FENCE
WGA	WOOD GATE
WIG	WROUGHT IRON GATE
WL	WATER LINE (NOT SPOTTED)
WLP	WOOD LIGHT POLE
WMB	WATER METER BOX
WP	WOOD POST
WPP	WOOD POWER POLE
WRF	4-STRAND SMOOTH WIRE FENCE
WV	WATER VAULT
WVB	WATER VALVE BOX
*	PAINTED UTILITY MARK
*	PAINTED ABCWUA UTILITY MARK
ø	TREE TRUNK DIAMETER
	CONIFEROUS TREE
	DECIDUOUS TREE
	SMALL DECIDUOUS TREE
	GROUP OF SMALL TREES
	SHRUB
	TREE STUMP

FOR INFORMATION ONLY

File Path:P:\DATA\2016\2016030.2\SUR\ | Plot Date: 10-24-2016
File Name:160302_TOPO1.DWG | Plot Time: 1:02 pm

TOPOGRAPHIC AND UTILITY SURVEY

EA ENGINEERING - KAFB BFF - RIDGECREST DRIVE GEP CORRIDOR

SURVEYED BY R.C.W./J.M.T.
DRAWN BY T.N.T.
APPROVED BY J.M.S.

NO.	DATE	BY	REVISIONS

JOB NO. 2016.030.2
DATE 10-2016
SHEET 2 OF 6
V-102 / 4 OF 27

TEMPORARY BENCHMARK #2 (T.B.M.)

A MAG NAIL W/WASHER SET IN CONCRETE NEAR THE SOUTHWEST QUADRANT OF THE INTERSECTION OF RIDGECREST DRIVE S.E. AND DAKOTA STREET S.E., AS SHOWN ON THIS SHEET.
ELEVATION = 5340.94 FEET (NAVD 1988)

NOT TO SCALE

20 0 40
10 20

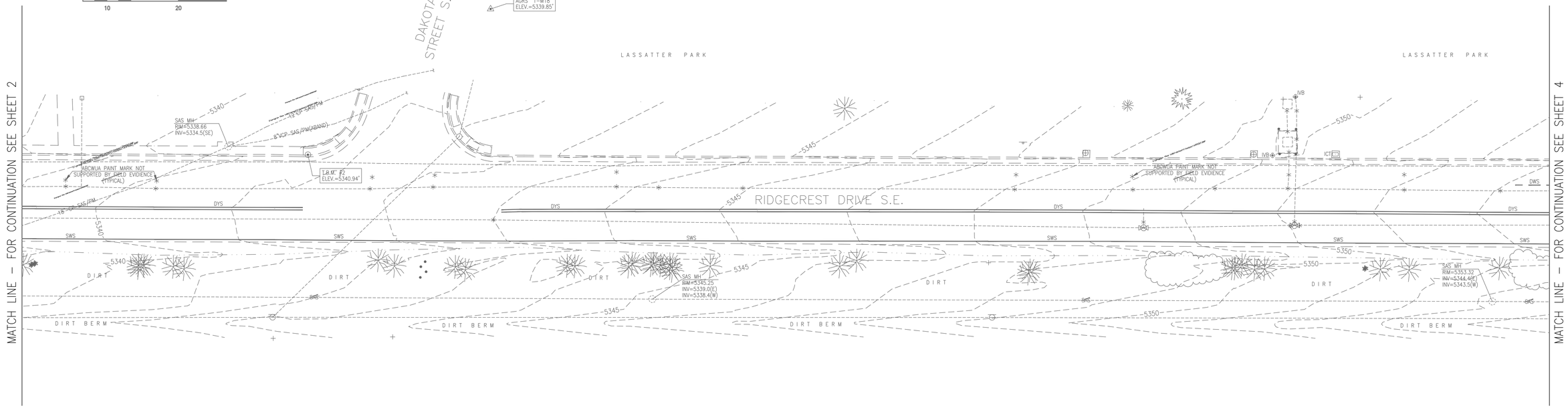

LEGEND

ABAND	POSSIBLE ABANDONED LINE	ICT	IRRIGATION CONTROL TIMER	VCP	VITRIFIED CLAY PIE
ABCWUA	ABCWUA LINE-SPOT LOCATION	INV	PIPE INVERT	VG	CONCRETE VALLEY GUTTER
ASPH	ASPHALT	IRR MH	IRRIGATION MANHOLE IN CONCRETE	W/PM	WATER LINE BY PAINT MARK
BW	BLOCK WALL	IVB	IRRIGATION VALVE BOX	WCR	CONCRETE WHEELCHAIR RAMP
C&G	CURB AND GUTTER	MB	MAILBOX	WDF	WOOD FENCE
C/PM	COMMUNICATION LINE BY PAINT MARK	MB/B	MAILBOX ON BRICKS	WGA	WOOD GATE
CBW	CONCRETE BARRIER WALL	MH	MANHOLE	WIG	WROUGHT IRON GATE
COND	COMMUNICATION CONDUIT	MLP	METAL LIGHT POLE	WL	WATER LINE (NOT SPOTTED)
CDP	CONCRETE DRIVE PAD	MSN	METAL SIGN (GENERAL)	WLP	WOOD LIGHT POLE
CF	LANDSCAPING CRUSHER FINES	MTC	METAL TRASH CAN	WMB	WATER METER BOX
CHC	CONCRETE HEADER CURB	OHC(2)	OVERHEAD COMMUNICATION (# OF LINES)	WP	WOOD POST
CI	CAST IRON PIPE	OHE(2)	OVERHEAD ELECTRIC (# OF LINES)	WPP	WOOD POWER POLE
CLF	CHAIN LINK FENCE	PBAR	PIPE BARRIER	WRF	4-STRAND SMOOTH WIRE FENCE
CLF/BW	CHAIN LINK FENCE WITH BARBED WIRE	PIV	POST INDICATOR VALVE	WV	WATER VAULT
CMR	COMMUNICATION RISER	PS	PAINTED PARKING STRIPE	WVB	WATER VALVE BOX
CMU	CONCRETE MASONRY UNIT WALL	PVC	POLYVINYL CHLORIDE PIPE		
CND	ELECTRIC CONDUIT	R/PM	REUSE WATER LINE BY PAINT MARK	*	PAINTED UTILITY MARK
CONC	CONCRETE	RCP	REINFORCED CONCRETE PIPE		
CP	CONCRETE PIPE	RR	LANDSCAPING RIVER ROCK (DRAINAGE)	*	PAINTED ABCWUA UTILITY MARK
CPB	COMMUNICATION PULLBOX	RRT	LANDSCAPING RAILROAD TIES		
CSW	CONCRETE SIDEWALK	RWV	REUSE WATER VAULT	ø	TREE TRUNK DIAMETER
D/W	CONCRETE DRIVEWAY	SAS	SANITARY SEWER		
DBL	DOUBLE	SAS/PM	SANITARY SEWER PIPE BY PAINT MARK		CONIFEROUS TREE
DPG	DOUBLE PIPE GATE	SD	STORM DRAIN		
DWS	PAINTED DASHED WHITE TRAFFIC STRIPE	SD/PM	STORM DRAIN PIPE BY PAINT MARK		
DYS	PAINTED DOUBLE YELLOW TRAFFIC STRIPE	SDI	STORM DRAIN INLET		
E/PM	ELECTRIC LINE BY PAINT MARK	SDP	SERVICE DROP POLE		DECIDUOUS TREE
EA	EDGE OF ASPHALT	SGP	STEEL GUARD POST		
EPB	ELECTRIC PULLBOX	SP	STEEL POST		
FH	FIRE HYDRANT	SSG	SLIDING STEEL GATE		SMALL DECIDUOUS TREE
FL	FLOWLINE	STW	STUCCO WALL		
FO/PM	FIBER OPTIC LINE BY PAINT MARK	STW/WI	STUCCO WALL WITH WROUGHT IRON FENCE		
FRD	UTILITY FROM COA DISTRIBUTION MAPS	SWS	PAINTED SOLID WHITE TRAFFIC STRIPE		GROUP OF SMALL TREES
G/PM	GAS LINE BY PAINT MARK	TA	TOP OF ASPHALT		
GA	GATE	TC	TOP OF CURB		
GRV	LANDSCAPING GRAVEL	TCO	TOP OF CONCRETE		SHRUB
GVB	GAS VALVE BOX	TG	TOP OF GRATE		
GW	GUY WIRE ANCHOR	TRN	ELECTRIC TRANSFORMER		TREE STUMP
HDPE	HIGH DENSITY POLYETHYLENE PIPE	TS	TRAFFIC SIGN		
		TV/PM	CABLE TELEVISION LINE BY PAINT MARK		
		TVCAB	CABLE TELEVISION CABINET		
		TVR	CABLE TELEVISION RISER		
		TYP	TYPICAL		

FOR INFORMATION ONLY

File Path:P:\JOB\2016\2016.030.2\SIRA\ | Plot Date: 10-24-2016
File Name:160302_TOPO3.DWG | Plot Time: 1:05 pm

TOPOGRAPHIC AND UTILITY SURVEY

EA ENGINEERING - KAFB BFF - RIDGECREST DRIVE GEP CORRIDOR

SURVEYED BY R.C.W./J.M.T.
DRAWN BY T.N.T.
APPROVED BY J.M.S.

NO.	DATE	BY	REVISIONS

JOB NO. 2016.030.2
DATE 10-2016
SHEET 3 OF 6
V-103 / 5 OF 27

TEMPORARY BENCHMARK #3 (T.B.M.)

A MAG NAIL W/WASHER SET IN TOP OF CONCRETE CURB ON THE NORTH SIDE OF RIDGECREST DRIVE S.E., AS SHOWN ON THIS SHEET.
ELEVATION = 5353.72 FEET (NAVD 1988)

NOT TO SCALE

20 0 40
10 20

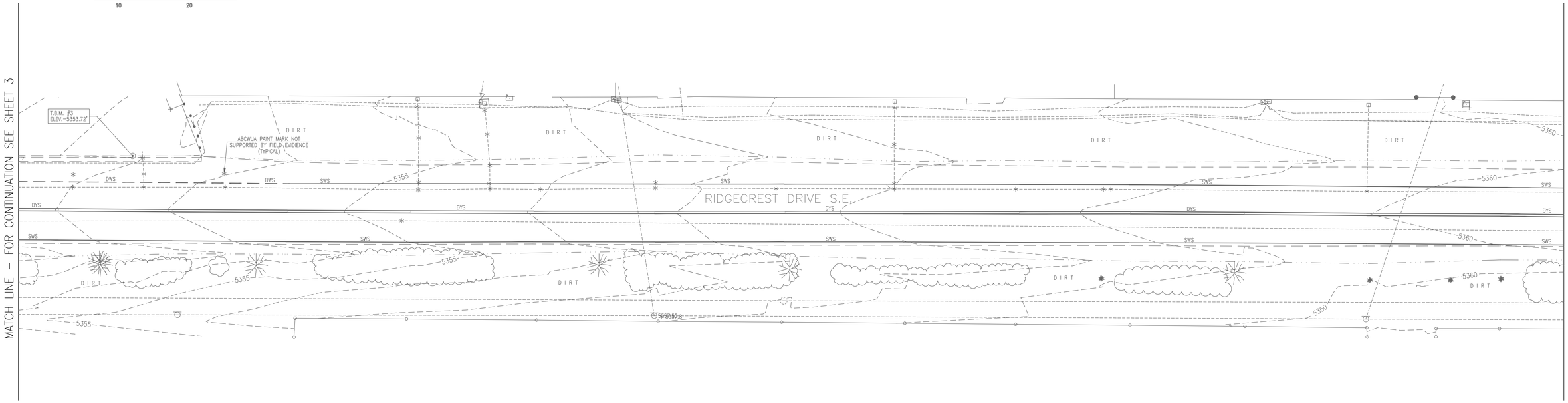

LEGEND

ABAND	POSSIBLE ABANDONED LINE	ICT	IRRIGATION CONTROL TIMER	VCP	VITRIFIED CLAY PIE
ABCWUA	ABCWUA LINE-SPOT LOCATION	INV	PIPE INVERT	VG	CONCRETE VALLEY GUTTER
ASPH	ASPHALT	IRR MH	IRRIGATION MANHOLE IN CONCRETE	W/PM	WATER LINE BY PAINT MARK
BW	BLOCK WALL	IVB	IRRIGATION VALVE BOX	WCR	CONCRETE WHEELCHAIR RAMP
C&G	CURB AND GUTTER	MB	MAILBOX	WDF	WOOD FENCE
C/PM	COMMUNICATION LINE BY PAINT MARK	MB/B	MAILBOX ON BRICKS	WGA	WOOD GATE
CBW	CONCRETE BARRIER WALL	MH	MANHOLE	WIG	WROUGHT IRON GATE
CCND	COMMUNICATION CONDUIT	MLP	METAL LIGHT POLE	WL	WATER LINE (NOT SPOTTED)
CDP	CONCRETE DRIVE PAD	MSN	METAL SIGN (GENERAL)	WLP	WOOD LIGHT POLE
CF	LANDSCAPING CRUSHER FINES	MTC	METAL TRASH CAN	WMB	WATER METER BOX
CHC	CONCRETE HEADER CURB	OHC(2)	OVERHEAD COMMUNICATION (# OF LINES)	WP	WOOD POST
CI	CAST IRON PIPE	OHE(2)	OVERHEAD ELECTRIC (# OF LINES)	WPP	WOOD POWER POLE
CLF	CHAIN LINK FENCE	PBAR	PIPE BARRIER	WRF	4-STRAND SMOOTH WIRE FENCE
CLF/BW	CHAIN LINK FENCE WITH BARBED WIRE	PIV	POST INDICATOR VALVE	WV	WATER VAULT
CMR	COMMUNICATION RISER	PS	PAINTED PARKING STRIPE	WVB	WATER VALVE BOX
CMU	CONCRETE MASONRY UNIT WALL	PVC	POLYVINYL CHLORIDE PIPE		
CND	ELECTRIC CONDUIT	R/PM	REUSE WATER LINE BY PAINT MARK	*	PAINTED UTILITY MARK
CONC	CONCRETE	RCP	REINFORCED CONCRETE PIPE	*	PAINTED ABCWUA UTILITY MARK
CP	CONCRETE PIPE	RR	LANDSCAPING RIVER ROCK (DRAINAGE)		
CPB	COMMUNICATION PULLBOX	RRT	LANDSCAPING RAILROAD TIES	ø	TREE TRUNK DIAMETER
CSW	CONCRETE SIDEWALK	RWV	REUSE WATER VAULT		
D/W	CONCRETE DRIVEWAY	SAS	SANITARY SEWER		
DBL	DOUBLE	SAS/PM	SANITARY SEWER PIPE BY PAINT MARK		CONIFEROUS TREE
DPG	DOUBLE PIPE GATE	SD	STORM DRAIN		
DWS	PAINTED DASHED WHITE TRAFFIC STRIPE	SD/PM	STORM DRAIN PIPE BY PAINT MARK		
DYS	PAINTED DOUBLE YELLOW TRAFFIC STRIPE	SDI	STORM DRAIN INLET		
E/PM	ELECTRIC LINE BY PAINT MARK	SDP	SERVICE DROP POLE		DECIDUOUS TREE
EA	EDGE OF ASPHALT	SGP	STEEL GUARD POST		
EPB	ELECTRIC PULLBOX	SP	STEEL POST		
FH	FIRE HYDRANT	SSG	SLIDING STEEL GATE		SMALL DECIDUOUS TREE
FL	FLOWLINE	STW	STUCCO WALL		
FO/PM	FIBER OPTIC LINE BY PAINT MARK	STW/WI	STUCCO WALL WITH WROUGHT IRON FENCE		
FRD	UTILITY FROM COA DISTRIBUTION MAPS	SWS	PAINTED SOLID WHITE TRAFFIC STRIPE		GROUP OF SMALL TREES
G/PM	GAS LINE BY PAINT MARK	TA	TOP OF ASPHALT		
GA	GATE	TC	TOP OF CURB		
GRV	LANDSCAPING GRAVEL	TCO	TOP OF CONCRETE		SHRUB
GVB	GAS VALVE BOX	TG	TOP OF GRATE		
GW	GUY WIRE ANCHOR	TRN	ELECTRIC TRANSFORMER		TREE STUMP
HDPE	HIGH DENSITY POLYETHYLENE PIPE	TS	TRAFFIC SIGN		
		TV/PM	CABLE TELEVISION LINE BY PAINT MARK		
		TVCAB	CABLE TELEVISION CABINET		
		TVR	CABLE TELEVISION RISER		
		TYP	TYPICAL		

FOR INFORMATION ONLY

File Path:P:\DATA\2016\2016.030.2\SURV\ | Plot Date: 10-24-2016
File Name:160302_TOPO4.DWG | Plot Time: 1:06 pm

TOPOGRAPHIC AND UTILITY SURVEY

EA ENGINEERING - KAFB BFF - RIDGECREST DRIVE GEP CORRIDOR

SURVEYED BY R.C.W./J.M.T.
DRAWN BY T.N.T.
APPROVED BY J.M.S.

NO.	DATE	BY	REVISIONS

JOB NO. 2016.030.2
DATE 10-2016
SHEET 4 OF 6
V-104 / 6 OF 27

NOT TO SCALE

20 0 40

10 20

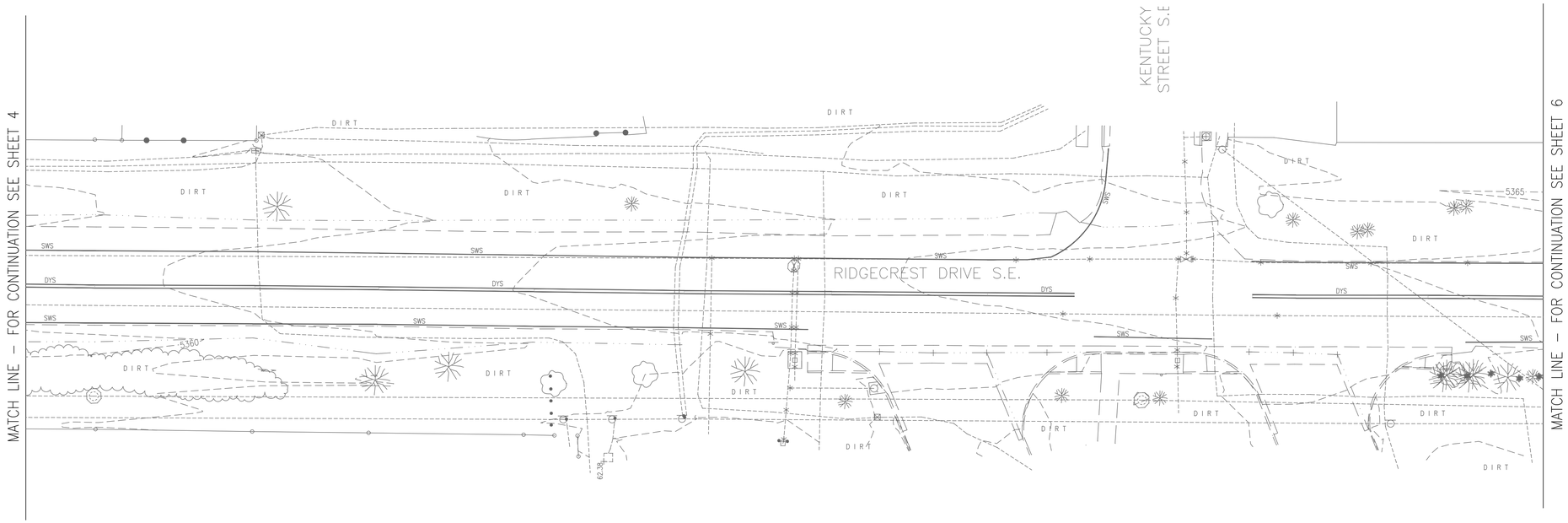

LEGEND

ABAND	POSSIBLE ABANDONED LINE
ABCWUA	ABCWUA LINE-SPOT LOCATION
ASPH	ASPHALT
BW	BLOCK WALL
C&G	CURB AND GUTTER
C/PM	COMMUNICATION LINE BY PAINT MARK
CBW	CONCRETE BARRIER WALL
CCND	COMMUNICATION CONDUIT
CDP	CONCRETE DRIVE PAD
CF	LANDSCAPING CRUSHER FINES
CHC	CONCRETE HEADER CURB
CI	CAST IRON PIPE
CLF	CHAIN LINK FENCE
CLF/BW	CHAIN LINK FENCE WITH BARBED WIRE
CMR	COMMUNICATION RISER
CMU	CONCRETE MASONRY UNIT WALL
CND	ELECTRIC CONDUIT
CONC	CONCRETE
CP	CONCRETE PIPE
CPB	COMMUNICATION PULLBOX
CSW	CONCRETE SIDEWALK
D/W	CONCRETE DRIVEWAY
DBL	DOUBLE
DPG	DOUBLE PIPE GATE
DWS	PAINTED DASHED WHITE TRAFFIC STRIPE
DYS	PAINTED DOUBLE YELLOW TRAFFIC STRIPE
E/PM	ELECTRIC LINE BY PAINT MARK
EA	EDGE OF ASPHALT
EPB	ELECTRIC PULLBOX
FH	FIRE HYDRANT
FL	FLOWLINE
FO/PM	FIBER OPTIC LINE BY PAINT MARK
FRD	UTILITY FROM COA DISTRIBUTION MAPS
G/PM	GAS LINE BY PAINT MARK
GA	GATE
GRV	LANDSCAPING GRAVEL
GVB	GAS VALVE BOX
GW	GUY WIRE ANCHOR
HDPE	HIGH DENSITY POLYETHYLENE PIPE

ICT	IRRIGATION CONTROL TIMER
INV	PIPE INVERT
IRR MH	IRRIGATION MANHOLE IN CONCRETE
IVB	IRRIGATION VALVE BOX
MB	MAILBOX
MB/B	MAILBOX ON BRICKS
MH	MANHOLE
MLP	METAL LIGHT POLE
MSN	METAL SIGN (GENERAL)
MTC	METAL TRASH CAN
OHC(2)	OVERHEAD COMMUNICATION (# OF LINES)
OHE(2)	OVERHEAD ELECTRIC (# OF LINES)
PBAR	PIPE BARRIER
PIV	POST INDICATOR VALVE
PS	PAINTED PARKING STRIPE
PVC	POLYVINYL CHLORIDE PIPE
R/PM	REUSE WATER LINE BY PAINT MARK
RCP	REINFORCED CONCRETE PIPE
RR	LANDSCAPING RIVER ROCK (DRAINAGE)
RRT	LANDSCAPING RAILROAD TIES
RWV	REUSE WATER VAULT
SAS	SANITARY SEWER
SAS/PM	SANITARY SEWER PIPE BY PAINT MARK
SD	STORM DRAIN
SD/PM	STORM DRAIN PIPE BY PAINT MARK
SDI	STORM DRAIN INLET
SDP	SERVICE DROP POLE
SGP	STEEL GUARD POST
SP	STEEL POST
SSG	SLIDING STEEL GATE
STW	STUCCO WALL
STW/WI	STUCCO WALL WITH WROUGHT IRON FENCE
SWS	PAINTED SOLID WHITE TRAFFIC STRIPE
TA	TOP OF ASPHALT
TC	TOP OF CURB
TCO	TOP OF CONCRETE
TG	TOP OF GRATE
TRN	ELECTRIC TRANSFORMER
TS	TRAFFIC SIGN
TV/PM	CABLE TELEVISION LINE BY PAINT MARK
TVCAB	CABLE TELEVISION CABINET
TVR	CABLE TELEVISION RISER
TYP	TYPICAL

VCP	VITRIFIED CLAY PIE
VG	CONCRETE VALLEY GUTTER
W/PM	WATER LINE BY PAINT MARK
WCR	CONCRETE WHEELCHAIR RAMP
WDF	WOOD FENCE
WGA	WOOD GATE
WIG	WROUGHT IRON GATE
WL	WATER LINE (NOT SPOTTED)
WLP	WOOD LIGHT POLE
WMB	WATER METER BOX
WP	WOOD POST
WPP	WOOD POWER POLE
WRF	4-STRAND SMOOTH WIRE FENCE
WV	WATER VAULT
WVB	WATER VALVE BOX
*	PAINTED UTILITY MARK
*	PAINTED ABCWUA UTILITY MARK
ø	TREE TRUNK DIAMETER
	CONIFEROUS TREE
	DECIDUOUS TREE
	SMALL DECIDUOUS TREE
	GROUP OF SMALL TREES
	SHRUB
	TREE STUMP

FOR INFORMATION ONLY

File Path:P:\DATA\2016\2016.030.2\SIRA\ | Plot Date: 10-24-2016
File Name:160302_TOPO5.DWG | Plot Time: 1:07 pm

TOPOGRAPHIC AND UTILITY SURVEY

EA ENGINEERING - KAFB BFF - RIDGECREST DRIVE GEP CORRIDOR

SURVEYED BY R.C.W./J.M.T.
DRAWN BY T.N.T.
APPROVED BY J.M.S.

NO.	DATE	BY	REVISIONS

JOB NO. 2016.030.2
DATE 10-2016
SHEET 5 OF 6
V-105 / 7 OF 27

TEMPORARY BENCHMARK #4 (T.B.M.)

A MAG NAIL W/WASHER SET IN ASPHALT NEAR THE SOUTHEAST QUADRANT OF THE INTERSECTION OF RIDGECREST DRIVE S.E. AND LOUISIANA BOULEVARD S.E., AS SHOWN ON THIS SHEET.

ELEVATION = 5364.68 FEET (NAVD 1988)

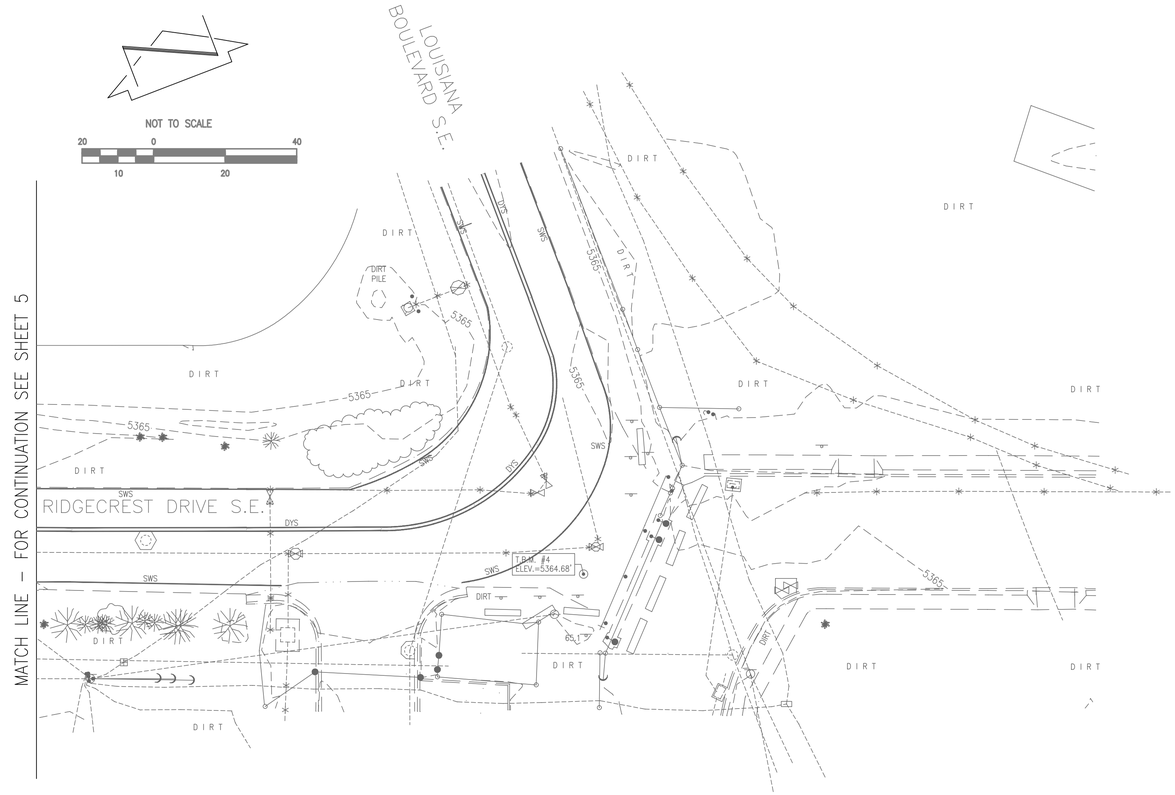

LEGEND

ABAND	POSSIBLE ABANDONED LINE
ABCWUA	ABCWUA LINE-SPOT LOCATION
ASPH	ASPHALT
BW	BLOCK WALL
C&G	CURB AND GUTTER
C/PM	COMMUNICATION LINE BY PAINT MARK
CBW	CONCRETE BARRIER WALL
CCND	COMMUNICATION CONDUIT
CDP	CONCRETE DRIVE PAD
CF	LANDSCAPING CRUSHER FINES
CHC	CONCRETE HEADER CURB
CI	CAST IRON PIPE
CLF	CHAIN LINK FENCE
CLF/BW	CHAIN LINK FENCE WITH BARBED WIRE
CMR	COMMUNICATION RISER
CMU	CONCRETE MASONRY UNIT WALL
CND	ELECTRIC CONDUIT
CONC	CONCRETE
CP	CONCRETE PIPE
CPB	COMMUNICATION PULLBOX
CSW	CONCRETE SIDEWALK
D/W	CONCRETE DRIVEWAY
DBL	DOUBLE
DPG	DOUBLE PIPE GATE
DWS	PAINTED DASHED WHITE TRAFFIC STRIPE
DYS	PAINTED DOUBLE YELLOW TRAFFIC STRIPE
E/PM	ELECTRIC LINE BY PAINT MARK
EA	EDGE OF ASPHALT
EPB	ELECTRIC PULLBOX
FH	FIRE HYDRANT
FL	FLOWLINE
FO/PM	FIBER OPTIC LINE BY PAINT MARK
FRD	UTILITY FROM COA DISTRIBUTION MAPS
G/PM	GAS LINE BY PAINT MARK
GA	GATE
GRV	LANDSCAPING GRAVEL
GVB	GAS VALVE BOX
GW	GUY WIRE ANCHOR
HDPE	HIGH DENSITY POLYETHYLENE PIPE
ICT	IRRIGATION CONTROL TIMER
INV	PIPE INVERT
IRR MH	IRRIGATION MANHOLE IN CONCRETE
IVB	IRRIGATION VALVE BOX
MB	MAILBOX
MB/B	MAILBOX ON BRICKS
MH	MANHOLE
MLP	METAL LIGHT POLE
MSN	METAL SIGN (GENERAL)
MTC	METAL TRASH CAN
OHC(2)	OVERHEAD COMMUNICATION (# OF LINES)
OHE(2)	OVERHEAD ELECTRIC (# OF LINES)
PBAR	PIPE BARRIER
PIV	POST INDICATOR VALVE
PS	PAINTED PARKING STRIPE
PVC	POLYVINYL CHLORIDE PIPE
R/PM	REUSE WATER LINE BY PAINT MARK
RCP	REINFORCED CONCRETE PIPE
RR	LANDSCAPING RIVER ROCK (DRAINAGE)
RRT	LANDSCAPING RAILROAD TIES
RWV	REUSE WATER VAULT
SAS	SANITARY SEWER
SAS/PM	SANITARY SEWER PIPE BY PAINT MARK
SD	STORM DRAIN
SD/PM	STORM DRAIN PIPE BY PAINT MARK
SDI	STORM DRAIN INLET
SDP	SERVICE DROP POLE
SGP	STEEL GUARD POST
SP	STEEL POST
SSG	SLIDING STEEL GATE
STW	STUCCO WALL
STW/WI	STUCCO WALL WITH WROUGHT IRON FENCE
SWS	PAINTED SOLID WHITE TRAFFIC STRIPE
TA	TOP OF ASPHALT
TC	TOP OF CURB
TCO	TOP OF CONCRETE
TG	TOP OF GRATE
TRN	ELECTRIC TRANSFORMER
TS	TRAFFIC SIGN
TV/PM	CABLE TELEVISION LINE BY PAINT MARK
TVCAB	CABLE TELEVISION CABINET
TVR	CABLE TELEVISION RISER
TYP	TYPICAL
VCP	VITRIFIED CLAY PIE
VG	CONCRETE VALLEY GUTTER
W/PM	WATER LINE BY PAINT MARK
WCR	CONCRETE WHEELCHAIR RAMP
WDF	WOOD FENCE
WGA	WOOD GATE
WIG	WROUGHT IRON GATE
WL	WATER LINE (NOT SPOTTED)
WLP	WOOD LIGHT POLE
WMB	WATER METER BOX
WP	WOOD POST
WPP	WOOD POWER POLE
WRF	4-STRAND SMOOTH WIRE FENCE
WV	WATER VAULT
WVB	WATER VALVE BOX
*	PAINTED UTILITY MARK
*	PAINTED ABCWUA UTILITY MARK
ø	TREE TRUNK DIAMETER
	CONIFEROUS TREE
	DECIDUOUS TREE
	SMALL DECIDUOUS TREE
	GROUP OF SMALL TREES
	SHRUB
	TREE STUMP

FOR INFORMATION ONLY

File Path: P:\DATA\2016\2016.030.2\SUR\ | Plot Date: 10-21-2016
File Name: 160302_TOPO6.DWG | Plot Time: 08:51 am

TOPOGRAPHIC AND UTILITY SURVEY

EA ENGINEERING - KAFB BFF - RIDGECREST DRIVE GEP CORRIDOR

SURVEYED BY R.C.W./J.M.T.
DRAWN BY T.N.T.
APPROVED BY J.M.S.

NO.	DATE	BY	REVISIONS

JOB NO. 2016.030.2
DATE 10-2016
SHEET 6 OF 6
V-106 / 8 OF 27

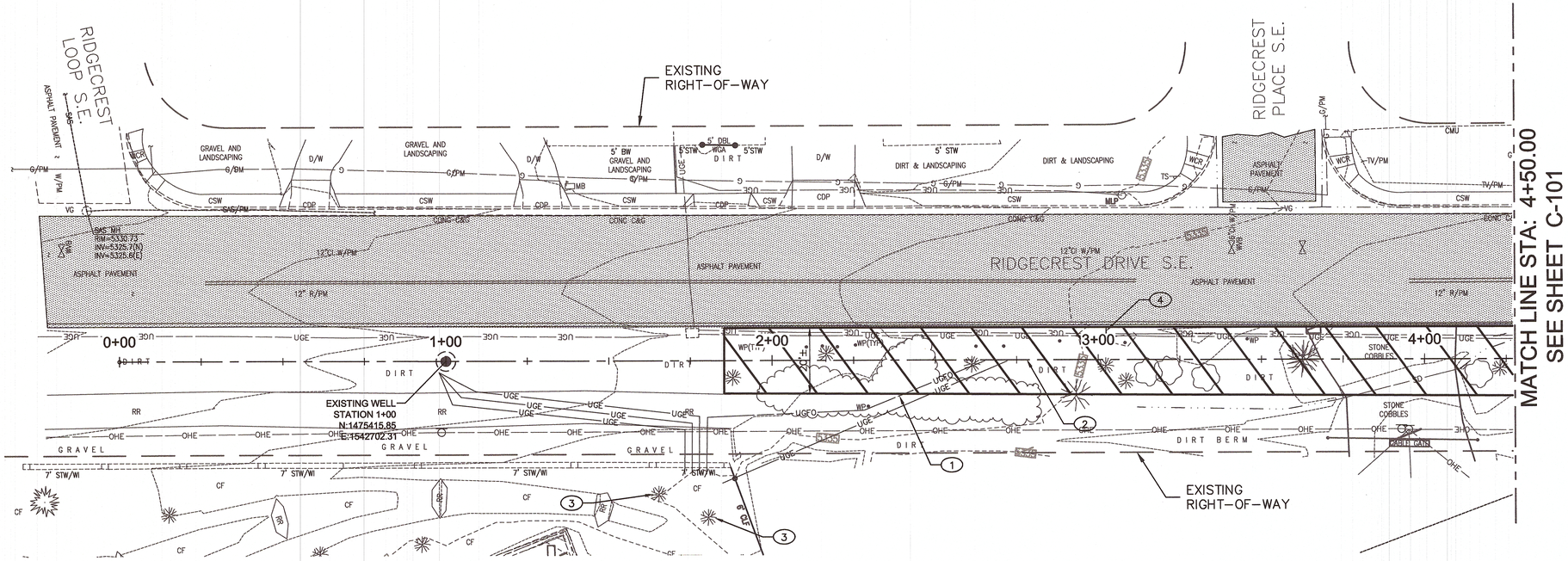

REMOVAL PLAN - STA: 0+00.00 TO STA: 4+50.00

SCALE: 1" = 20'

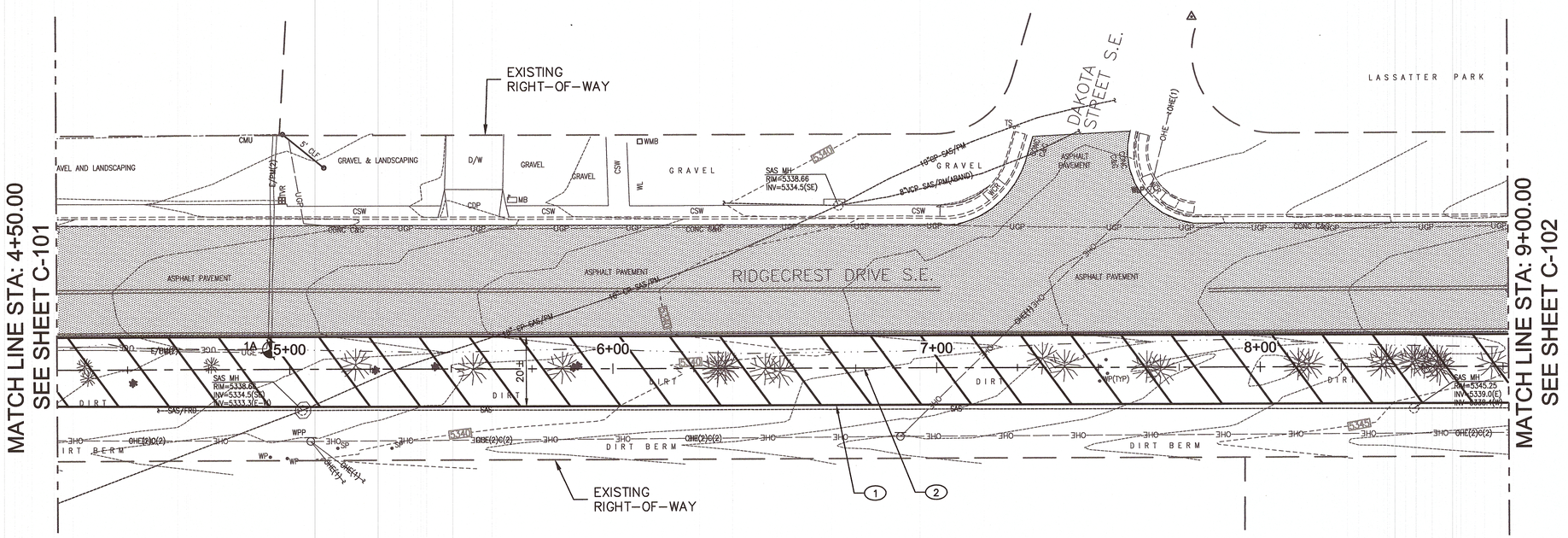

REMOVAL PLAN - STA: 4+50.00 TO STA: 9+00.00

SCALE: 1" = 20'

GENERAL NOTES:

1. CONTRACTOR SHALL PROVIDE A TRAFFIC CONTROL PLAN TO THE CITY OF ALBUQUERQUE FOR APPROVAL AND A PERMIT.
2. NON-POTABLE WATER LINE INSTALLED BY THIS PROJECT IS PRIVATE.
3. CONTRACTOR SHALL CONTACT NMOC (811) PRIOR TO START OF CONSTRUCTION.
4. MANHOLE LIDS AND VALVE BOX SHALL BE ADJUSTED TO FINISH GRADE WHERE APPLICABLE.

KEYED NOTES:

1. CLEAR AND GRUB AND DISPOSE OF EXISTING TREES AND VEGETATION IN THIS AREA PRIOR TO EXCAVATION.
2. PROJECT BASELINE.
3. CLEAR AND GRUB AND DISPOSE OF EXISTING TREE.
4. IF NECESSARY, REMOVE AND SALVAGE EXISTING SPEED LIMIT SIGN. REINSTALL AFTER CONSTRUCTION IS COMPLETE.

LEGEND:

- EXISTING ASPHALT PAVEMENT (TO REMAIN UNDISTURBED)
- EXISTING RIGHT-OF-WAY
- CONSTRUCTION LIMITS

SCALE: 1" = 20'

20' 0 20' 40' 60' Feet

COA PROJECT NO: 586082

Design Review Committee	City Engineer Approval	Last Design Update	No. / Day / Yr.	No. / Day / Yr.

GEORGE NEMETH NEW MEXICO 12284 REGISTERED PROFESSIONAL ENGINEER
5-3-17

NO.	REVISION DESCRIPTION	DATE	BY
5			
4			
3			
2			
1			

Name
Location

KIRTLAND AIR FORCE BASE
BULK FUELS FACILITY
KAFB - 106239 CONVEYANCE LINE

REMOVAL SHEET
STA: 0+00 (BOP) TO STA: 9+00

SMITH ENGINEERING COMPANY
2201 SAN PEDRO NE BLDG 4, SUITE 200
ALBUQUERQUE, NM 87110

JOB NO: 116112
DATE: MAY 3, 2017
SHEET NO: C-101 / 9 OF 27

Q:\SEC-----PROJECTS\116112 KAFB Groundwater Reclaim Pipeline\ENGINEERING\CADD\PLANSET\C-101-REMOVAL SHEET.dwg May 03, 2017 - 9:18am Saved By: jamiev

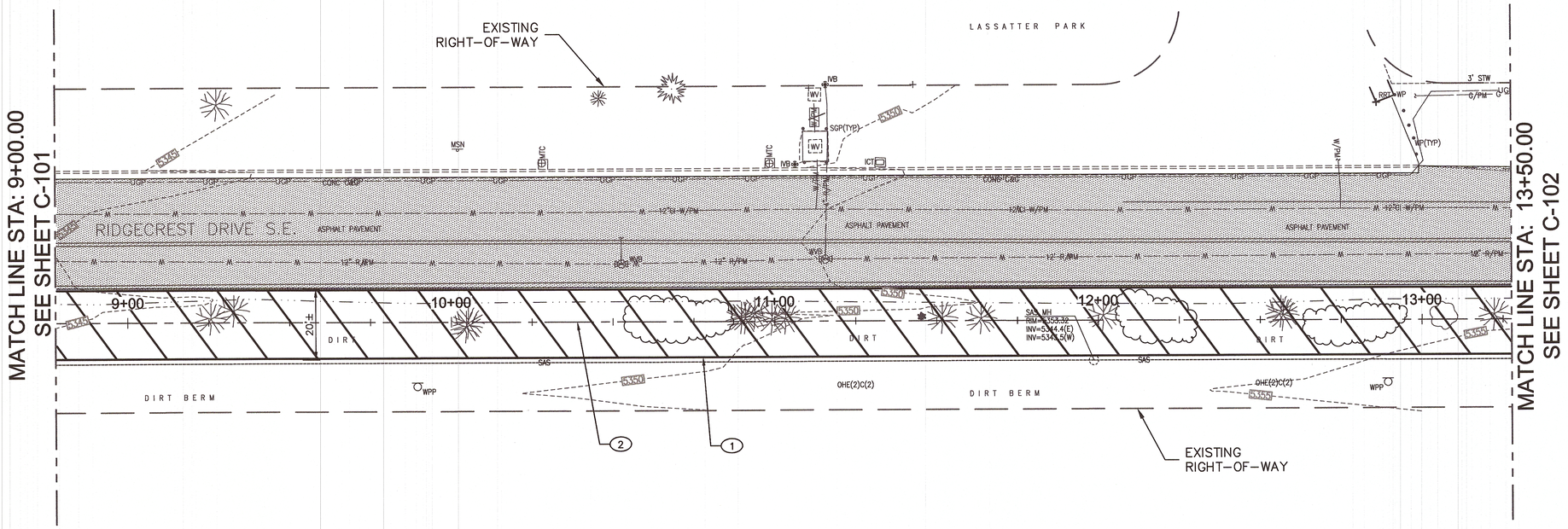

REMOVAL PLAN - STA: 9+00.00 TO STA: 13+50.00

SCALE: 1" = 20'

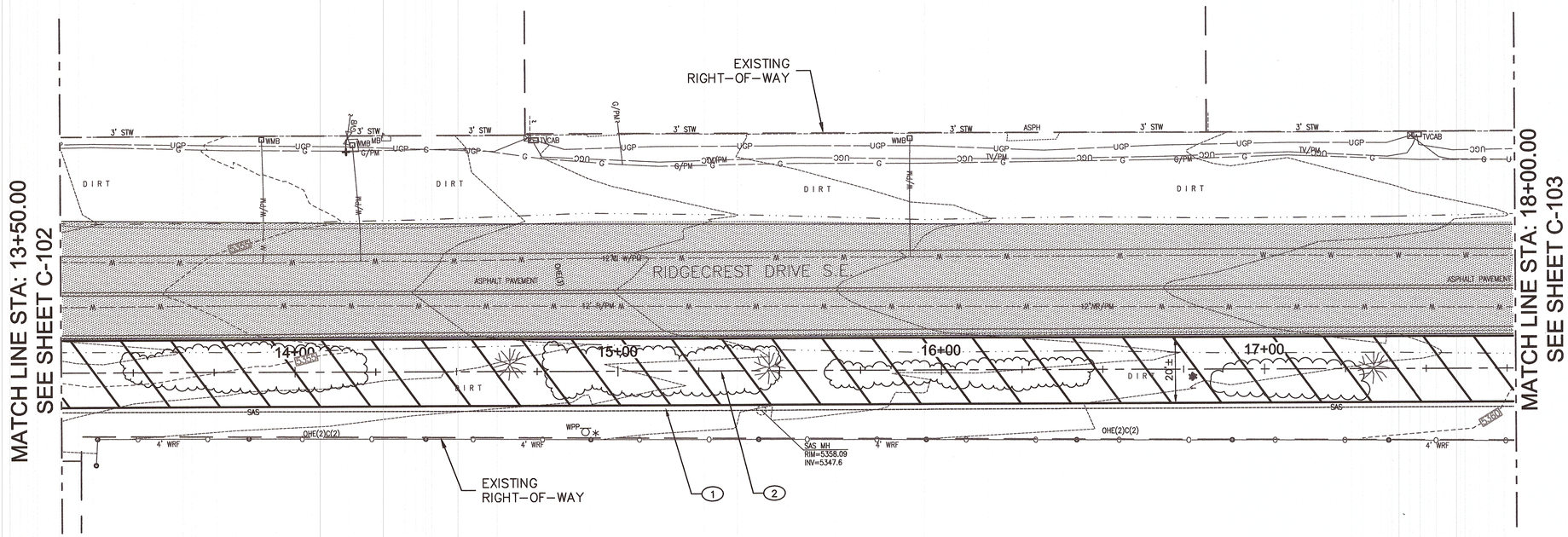

REMOVAL PLAN - STA: 13+50.00 TO STA: 18+00.00

SCALE: 1" = 20'

GENERAL NOTES:

1. CONTRACTOR SHALL PROVIDE A TRAFFIC CONTROL PLAN TO THE CITY OF ALBUQUERQUE FOR APPROVAL AND A PERMIT.
2. NON-POTABLE WATER LINE INSTALLED BY THIS PROJECT IS PRIVATE.
3. CONTRACTOR SHALL CONTACT NMOC (811) PRIOR TO START OF CONSTRUCTION.
4. MANHOLE LIDS AND VALVE BOX SHALL BE ADJUSTED TO FINISH GRADE WHERE APPLICABLE.

KEYED NOTES:

1. CLEAR AND GRUB AND DISPOSE OF EXISTING TREES AND VEGETATION IN THIS AREA PRIOR TO EXCAVATION.
2. PROJECT BASELINE.

LEGEND:

- EXISTING ASPHALT PAVEMENT (TO REMAIN UNDISTURBED)
- EXISTING RIGHT-OF-WAY
- CONSTRUCTION LIMITS

SCALE: 1" = 20'

20' 0 20' 40' 60' Feet

COA PROJECT NO: 586082

Design Review Committee	City Engineer Approval	Last Design Update	Mo. / Day / Yr.	Mo. / Day / Yr.

GEORGE NEMETH
NEW MEXICO
12284
REGISTERED PROFESSIONAL ENGINEER
5-3-17

NO.	REVISION DESCRIPTION	DATE	BY
1			
2			
3			
4			
5			

Name
Location

KIRTLAND AIR FORCE BASE
BULK FUELS FACILITY
KAFB - 106239 CONVEYANCE LINE

REMOVAL SHEET
STA: 9+00 TO STA: 18+00

SMITH ENGINEERING COMPANY
2201 SAN PEDRO NE BLDG 4, SUITE 200
ALBUQUERQUE, NM 87110

JOB NO: 116112
DATE: MAY 3, 2017
SHEET NO: C-102 / 10 OF 27

Q:\SEC----PROJECTS\116112 KAFB Groundwater Recism Pipeline\ENGINEERING\CADD\PLANSET\C-102-REMOVAL SHEET.dwg May 03, 2017 - 10:11am Saved By: jamiev

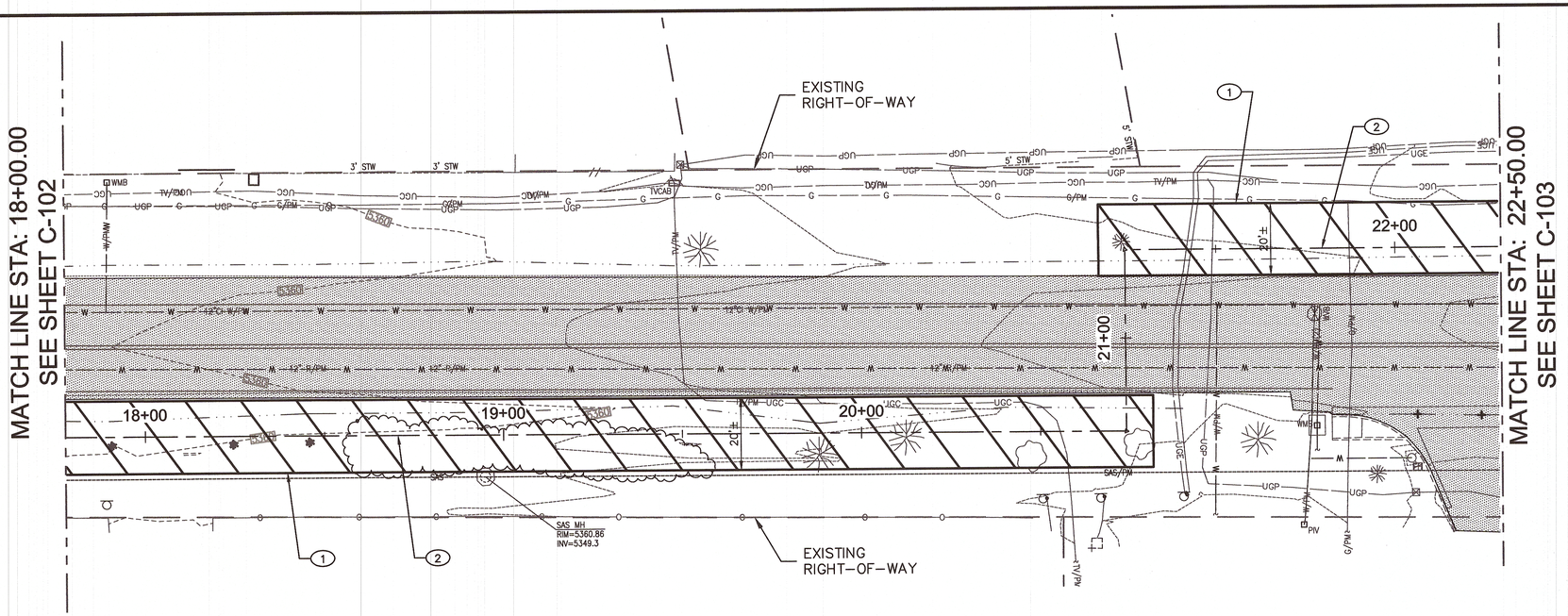

REMOVAL PLAN STA: 18+00.00 TO STA: 22+50.00

SCALE: 1" = 20'

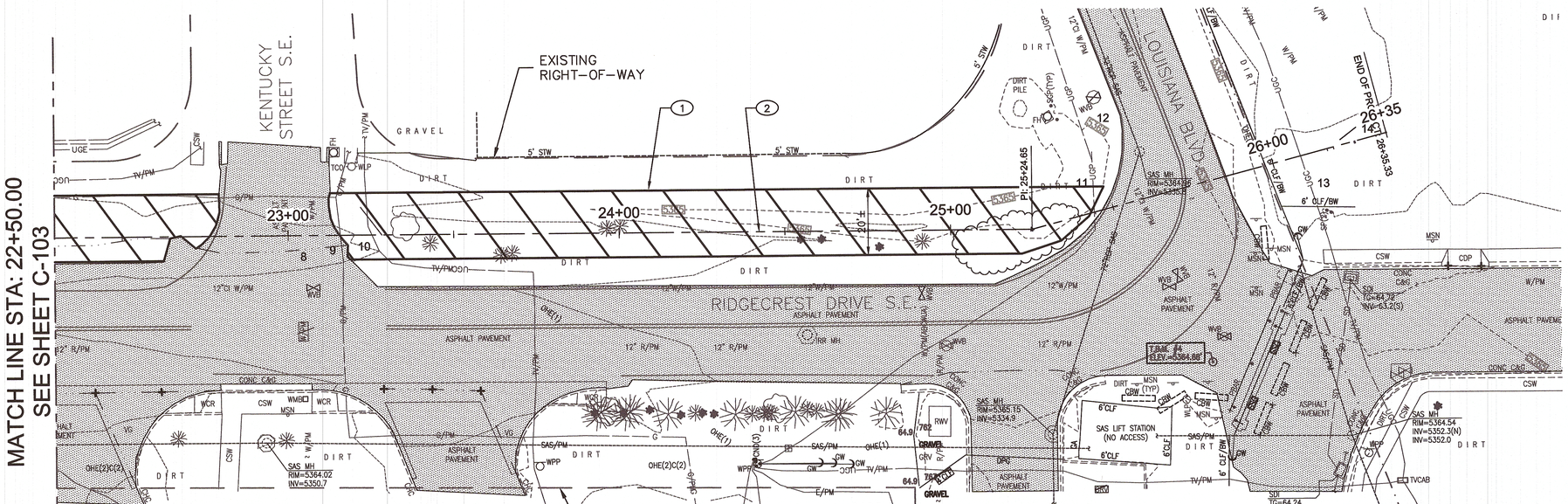

REMOVAL PLAN STA: 22+50.00 TO STA: 26+51.00 (EOP)

SCALE: 1" = 20'

GENERAL NOTES:

1. CONTRACTOR SHALL PROVIDE A TRAFFIC CONTROL PLAN TO THE CITY OF ALBUQUERQUE FOR APPROVAL AND A PERMIT.
2. NON-POTABLE WATER LINE INSTALLED BY THIS PROJECT IS PRIVATE.
3. CONTRACTOR SHALL CONTACT NMOC (811) PRIOR TO START OF CONSTRUCTION.
4. MANHOLE LIDS AND VALVE BOX SHALL BE ADJUSTED TO FINISH GRADE WHERE APPLICABLE.

KEYED NOTES:

1. CLEAR AND GRUB AND DISPOSE OF EXISTING TREES AND VEGETATION IN THIS AREA PRIOR TO EXCAVATION.
2. PROJECT BASELINE.

LEGEND:

- EXISTING ASPHALT PAVEMENT (TO REMAIN UNDISTURBED)
- EXISTING RIGHT-OF-WAY
- CONSTRUCTION LIMITS

SCALE: 1" = 20'

20' 0 20' 40' 60' Feet

COA PROJECT NO: 586082

GEORGE NEMETH NEW MEXICO 12284 REGISTERED PROFESSIONAL ENGINEER
5-3-17

NO.	REVISION DESCRIPTION	DATE	BY
1			
2			
3			
4			
5			

Name
Location

KIRTLAND AIR FORCE BASE
BULK FUELS FACILITY
KAFB - 106239 CONVEYANCE LINE

REMOVAL SHEET
STA: 18+00 TO STA: 26+25.60 (EOP)

SMITH ENGINEERING COMPANY
2201 SAN PEDRO NE BLDG 4, SUITE 200
ALBUQUERQUE, NM 87110

Design Review Committee	City Engineer Approval	Last Design Update	No. / Day / Yr.	No. / Day / Yr.

JOB NO: 116112
DATE: MAY 3, 2017
SHEET NO: C-103 / 11 OF 27

Q:\SEC-----PROJECTS\116112 KAFB Groundwater Realign. Pipeline\ENGINEERING\CADD\PLANSET\C-103-REMOVAL SHEET.dwg May 03, 2017 - 10:13am Saved By: jamiev

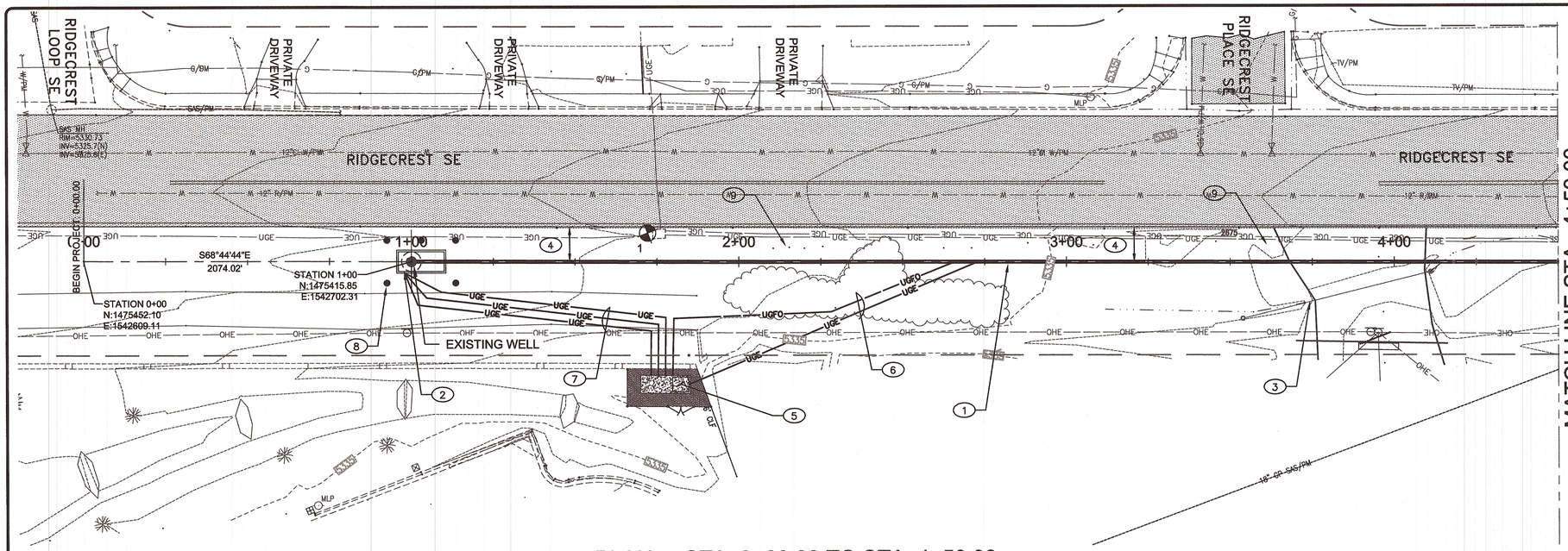

PLAN - STA: 0+00.00 TO STA: 4+50.00

SCALE: 1" = 20'

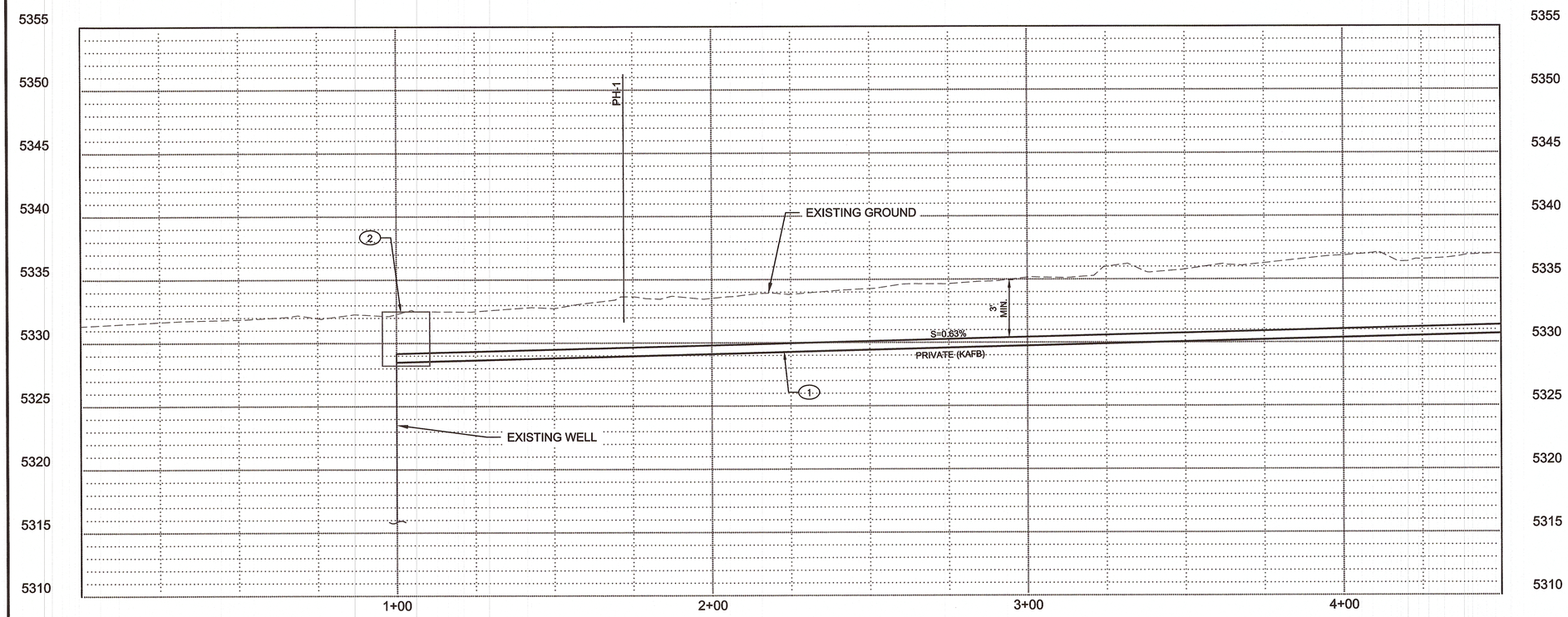

PROFILE - STA: 0+00.00 TO STA: 4+50.00

GENERAL NOTES:

1. MAINTAIN A MINIMUM OF 3 FEET OF SOIL COVER OVER INSTALLED 4"x8" DOUBLE WALL PIPE.
2. PROVIDE A MINIMUM OF 18" OF VERTICAL SEPARATION WHEN CROSSING OVER OR UNDER EXISTING UTILITIES.

KEYED NOTES:

1. NEW PRIVATE 4"x8" HDPE PIPELINE. SEE C-301, DETAIL 2 FOR TYP. TRENCH SECTION
2. NEW REINFORCED PRECAST CONCRETE WELL VAULT W/ - 5 GUARD POSTS. SEE C-302 DETAIL 1 FOR VAULT DETAIL.
3. REMOVE AND SALVAGE EXIST. CULVERT PIPE. RESET TO EXISTING ELEVATION AFTER PIPELINE IS INSTALLED AND BACKFILLED.
4. INSTALL PIPELINE 10' OFF EXISTING EDGE OF PAVEMENT UNLESS OTHERWISE NOTED.
5. ELECTRICAL EQUIPMENT YARD. SEE C-401 FOR ENLARGED PLAN.
6. SEE C-301, DETAIL 5 FOR TRENCH SECTION.
7. SEE E-501, DETAIL 2 FOR TRENCH SECTION.
8. GUARD POST (TYP. OF 5) SEE C-301, DETAIL 4.
9. RESTORE EXISTING SWALE AFTER PIPELINE INSTALLATION IS COMPLETE. SEED SWALE AND ALL GROUND DISTURBED BY CONSTRUCTION WITH COA STANDARD SPEC. (1012) NATIVE GRASS SEED MIX AND PROCEDURES.

HORIZONTAL
SCALE: 1" = 20'
VERTICAL
SCALE: 1" = 5'

20' 0 20' 40' 60' HORIZ.
5' 0 5' 10' 15' VERT.

POTHOLE TABLE

NO.	DESCRIPTION	DEPTH
1	2" DIA. ELEC.	25"

GEORGE NEMETH
NEW MEXICO
12284
REGISTERED PROFESSIONAL ENGINEER
5-3-17

NO.	REVISION DESCRIPTION	DATE	BY
5			
4			
3			
2			
1			

Name
Location

KIRTLAND AIR FORCE BASE
BULK FUELS FACILITY
KAFB - 106239 CONVEYANCE LINE

CONVEYANCE LINE INSTALLATION
STA: 0+00 TO STA: 4+50

SMITH ENGINEERING COMPANY
2201 SAN PEDRO NE BLDG 4, SUITE 200
ALBUQUERQUE, NM 87110

COA PROJECT NO: 586082

Design Review Committee	City Engineer Approval	Last Design Update	No. / Day / Yr.	No. / Day / Yr.

JOB NO: 116112
DATE: MAY 3, 2017
SHEET NO: C-201 / 12 OF 27

G:\SEC-----PROJECTS\116112 KAFB Groundwater Reclam Pipeline\ENGINEERING\CADD\PLANSET\C-201- Plan and Profile.dwg May 03, 2017 - 9:22am Saved By: jamiev

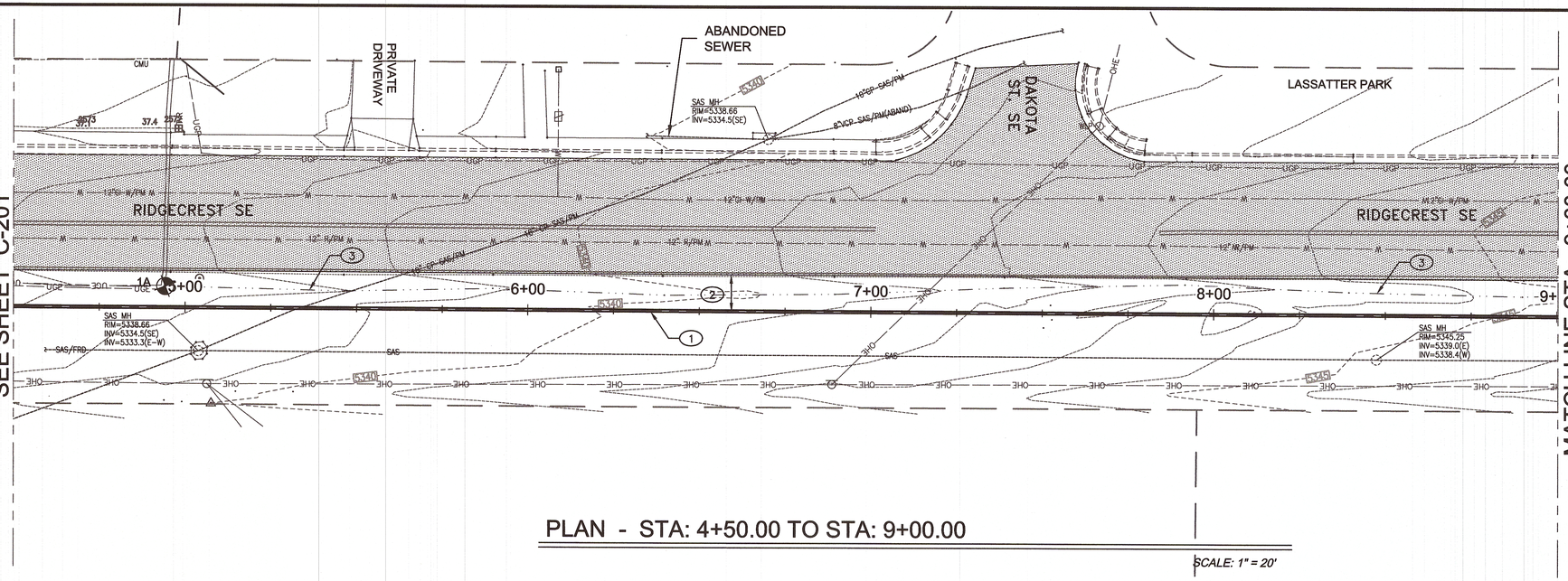

PLAN - STA: 4+50.00 TO STA: 9+00.00

SCALE: 1" = 20'

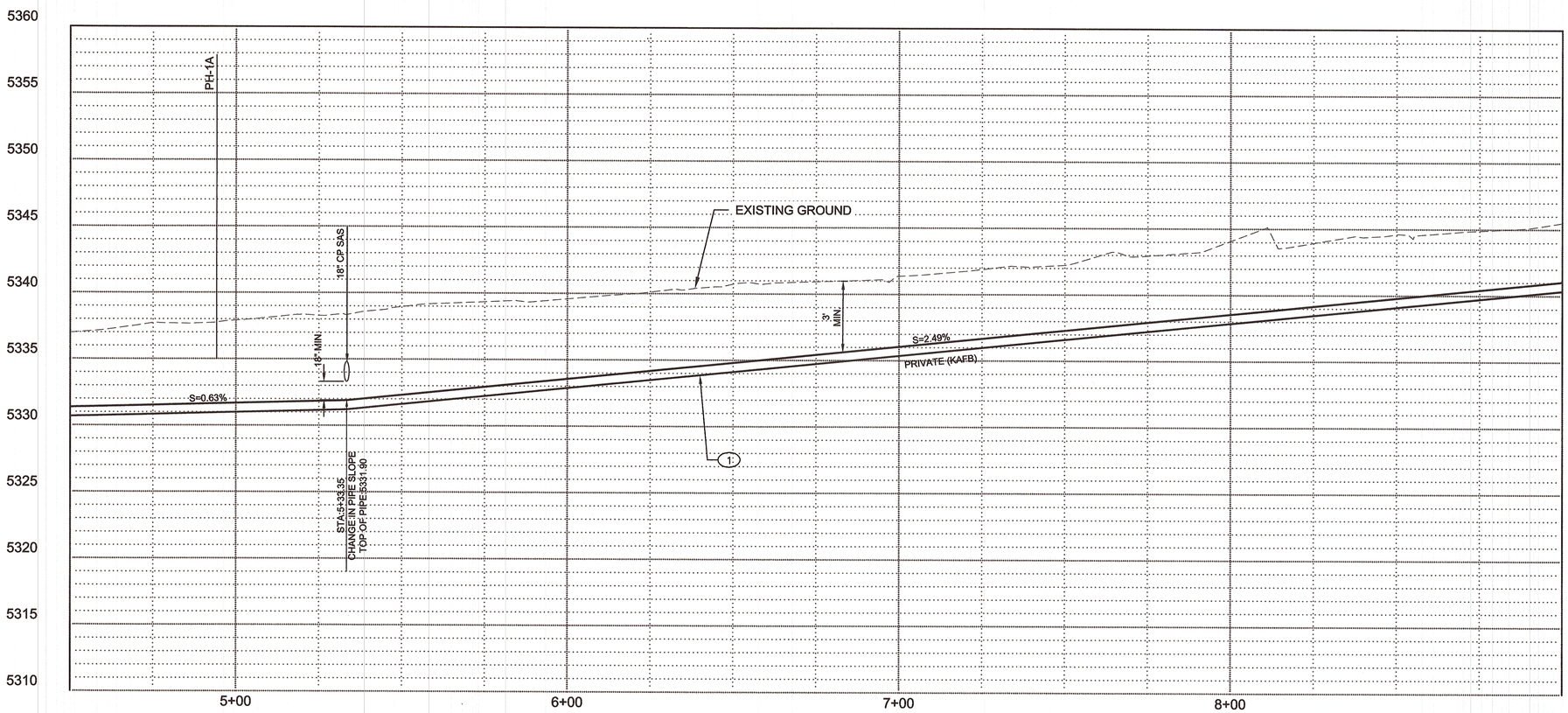

PROFILE - STA: 4+50.00 TO STA: 9+00.00

GENERAL NOTES:

1. MAINTAIN A MINIMUM OF 3 FEET OF SOIL COVER OVER INSTALLED 4"x8" DOUBLE WALL PIPE.
2. PROVIDE A MINIMUM OF 18" OF VERTICAL SEPARATION WHEN CROSSING OVER OR UNDER EXISTING UTILITIES.

KEYED NOTES:

1. NEW PRIVATE 4"x8" HDPE PIPELINE. SEE C-301, DETAIL 2 FOR TYP. TRENCH SECTION.
2. INSTALL PIPELINE 10' OFF EXISTING EDGE OF PAVEMENT. UNLESS OTHERWISE NOTED.
3. RESTORE EXISTING SWALE AFTER PIPELINE INSTALLATION IS COMPLETE. SEED SWALE AND ALL GROUND DISTURBED BY CONSTRUCTION WITH COA STANDARD SPEC. (1012) NATIVE GRASS SEED MIX AND PROCEDURES.

HORIZONTAL
SCALE: 1" = 20'
VERTICAL
SCALE: 1" = 5'

20' 0 20' 40' 60' HORIZ.
5' 0 5' 10' 15' VERT.

POTHOLE TABLE

NO.	DESCRIPTION	DEPTH
1A	2- 1.5" DIA. ELEC.	33"

COA PROJECT NO: 586082

Design Review Committee	City Engineer Approval	Last Design Update	No. / Day / Yr.	No. / Day / Yr.

GEORGE NEMETH
NEW MEXICO
12284
REGISTERED PROFESSIONAL ENGINEER
5-3-17

NO.	REVISION DESCRIPTION	DATE	BY
1			
2			
3			
4			
5			

Name
Location

KIRTLAND AIR FORCE BASE
BULK FUELS FACILITY
KAFB - 106239 CONVEYANCE LINE

CONVEYANCE LINE INSTALLATION
STA: 4+50 TO STA: 9+00

SMITH ENGINEERING COMPANY
2201 SAN PEDRONE BLDG 4, SUITE 200
ALBUQUERQUE, NM 87110

JOB NO: 116112
DATE: MAY 3, 2017
SHEET NO: C-202 / 13 OF 27

Q:\SEC----PROJECTS\116112 KAFB Groundwater Reclaim Pipeline\ENGINEERING\CADD\PLANSET\C-202-Plan and Profile.dwg May 03, 2017 - 9:29am Saved By: jerlep

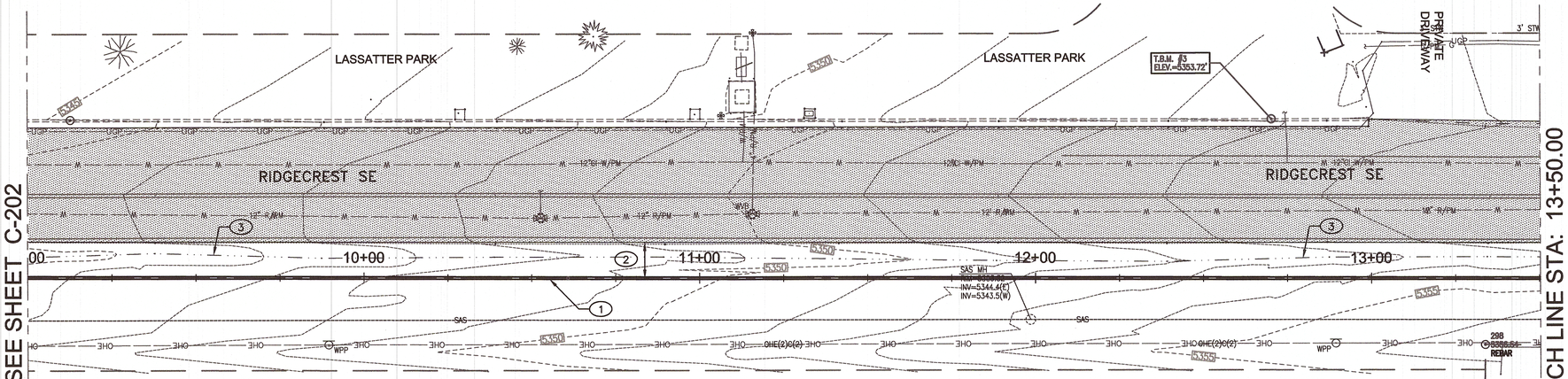

PLAN - STA: 9+00.00 TO STA: 13+50.00

SCALE: 1" = 20'

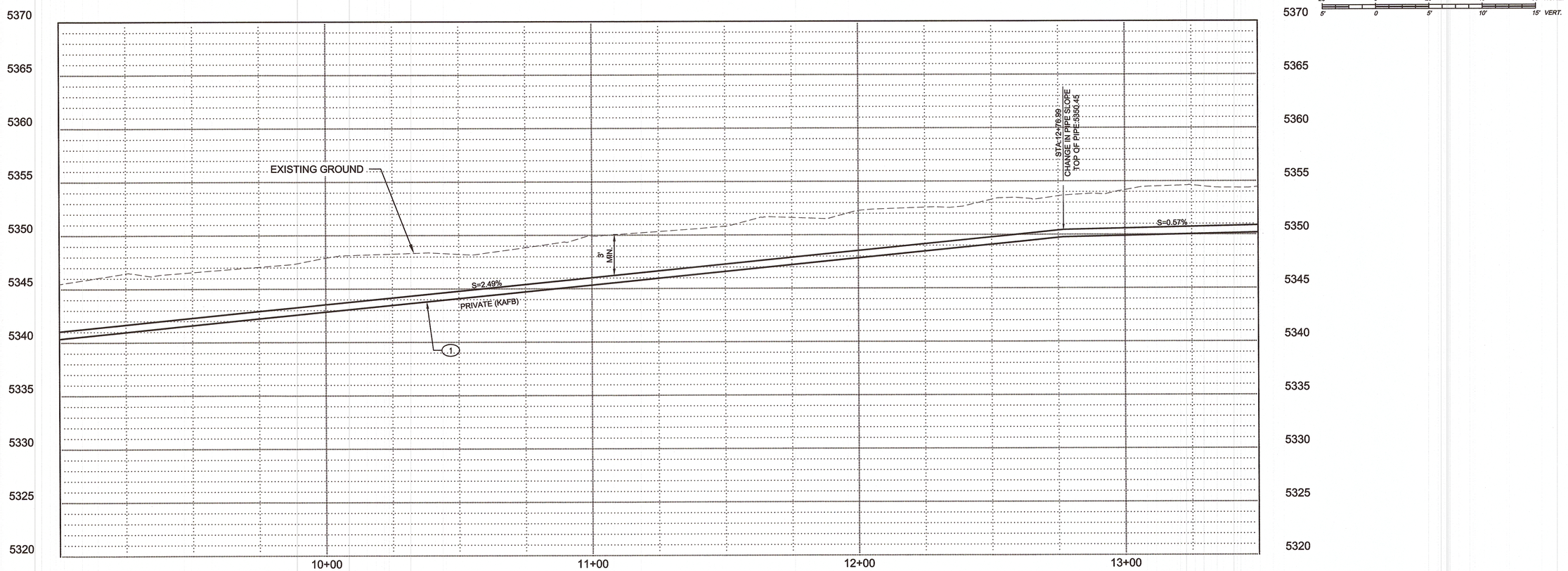

PROFILE - STA: 9+00.00 TO STA: 13+50.00

GENERAL NOTES:

1. MAINTAIN A MINIMUM OF 3 FEET OF SOIL COVER OVER INSTALLED 4"x8" DOUBLE WALL PIPE.
2. PROVIDE A MINIMUM OF 18" OF VERTICAL SEPARATION WHEN CROSSING OVER OR UNDER EXISTING UTILITIES.

KEYED NOTES:

1. NEW PRIVATE 4"x8" HDPE PIPELINE. SEE C-301, DETAIL 2 FOR TYP. TRENCH SECTION.
2. INSTALL PIPELINE 10' OFF EXISTING EDGE OF PAVEMENT. UNLESS OTHERWISE NOTED.
3. RESTORE EXISTING SWALE AFTER PIPELINE INSTALLATION IS COMPLETE. SEED SWALE AND ALL GROUND DISTURBED BY CONSTRUCTION WITH COA STANDARD SPEC. (1012) NATIVE GRASS SEED MIX AND PROCEDURES.

HORIZONTAL
SCALE: 1" = 20'
VERTICAL
SCALE: 1" = 5'

20' 0 20' 40' 60' HORIZ.
5' 0 5' 10' 15' VERT.

COA PROJECT NO: 586082

Design Review Committee	City Engineer Approval	Last Design Update	No. / Day / Yr.	No. / Day / Yr.

GEORGE NEMETH
NEW MEXICO
12284
REGISTERED PROFESSIONAL ENGINEER
5-3-17

NO.	REVISION DESCRIPTION	DATE	BY
1			
2			
3			
4			
5			

Name
Location

KIRTLAND AIR FORCE BASE
BULK FUELS FACILITY
KAFB - 106239 CONVEYANCE LINE

CONVEYANCE LINE INSTALLATION
STA: 9+00 TO STA: 13+50

SMITH ENGINEERING COMPANY
2201 SAN PEDRO NE BLDG 4, SUITE 200
ALBUQUERQUE, NM 87110

JOB NO: 116112
DATE: MAY 3, 2017
SHEET NO: C-203 / 14 OF 27

Q:\SEC-----PROJECTS\116112 KAFB Groundwater Reclam Pipeline\ENGINEERING\CADD\PLANSET\C-203-Plan and Profile.dwg May 03, 2017 - 9:31am Saved By: jerrep

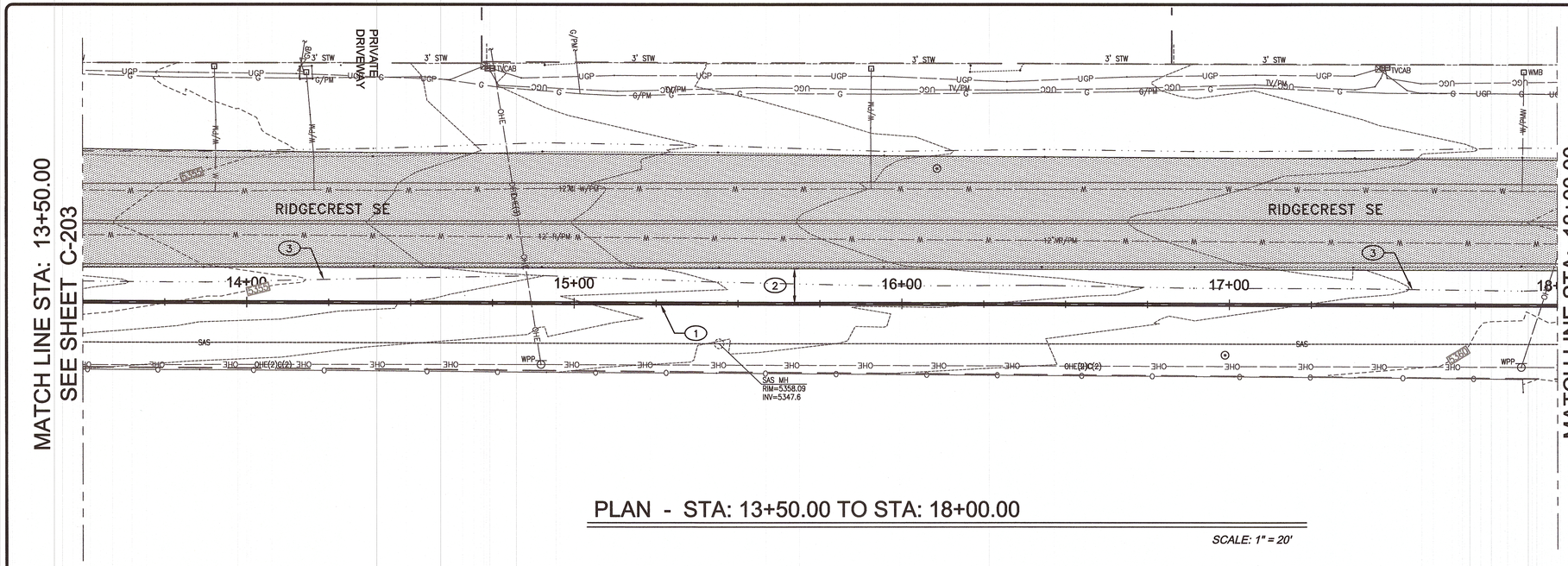

PLAN - STA: 13+50.00 TO STA: 18+00.00

SCALE: 1" = 20'

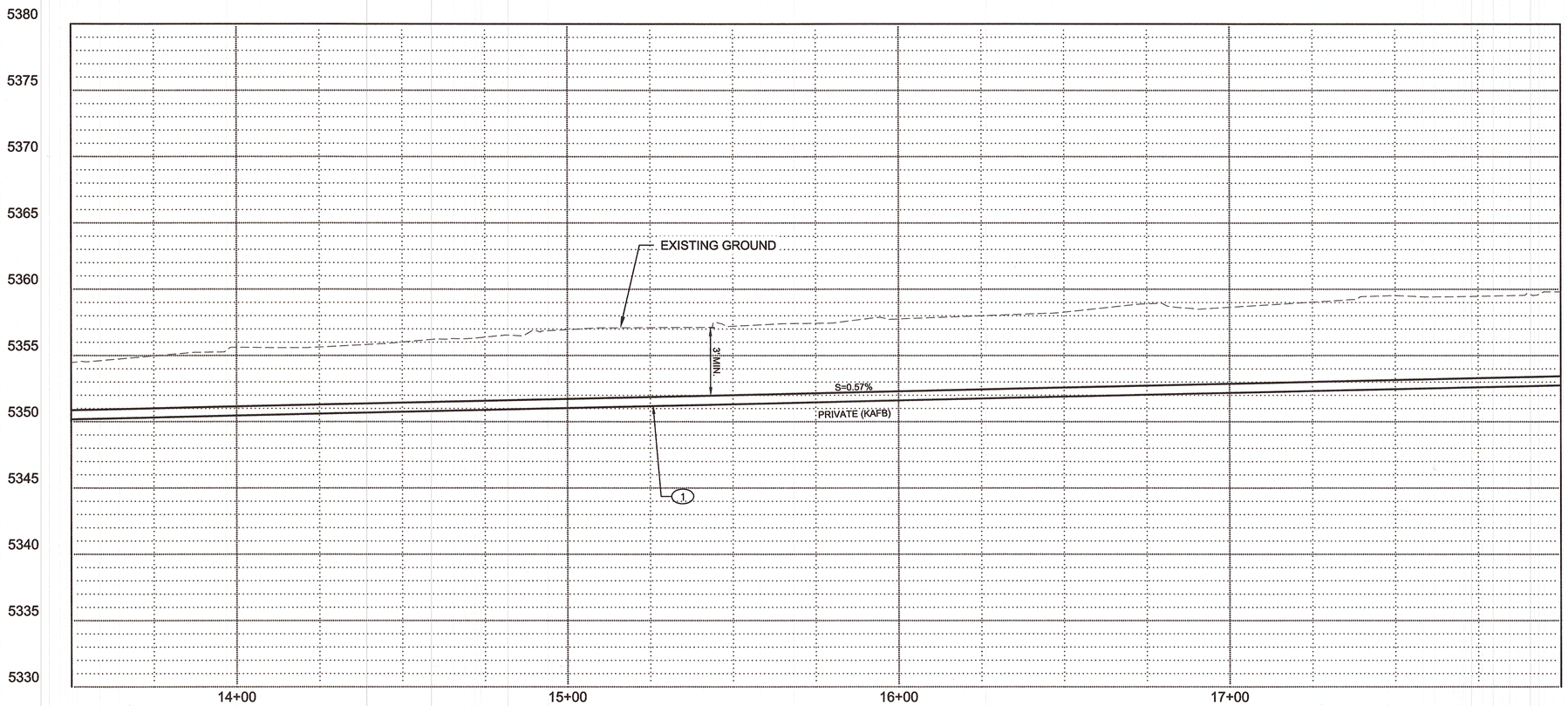

PROFILE - STA: 13+50.00 TO STA: 18+00.00

GENERAL NOTES:

1. MAINTAIN A MINIMUM OF 3 FEET OF SOIL COVER OVER INSTALLED 4"x8" DOUBLE WALL PIPE.
2. PROVIDE A MINIMUM OF 18" OF VERTICAL SEPARATION WHEN CROSSING OVER OR UNDER EXISTING UTILITIES.

KEYED NOTES:

1. NEW PRIVATE 4"x8" HDPE PIPELINE. SEE C-301, DETAIL 2 FOR TYP. TRENCH SECTION.
2. INSTALL PIPELINE 10' OFF EXISTING EDGE OF PAVEMENT. UNLESS OTHERWISE NOTED.
3. RESTORE EXISTING SWALE AFTER PIPELINE INSTALLATION IS COMPLETE. SEED SWALE AND ALL GROUND DISTURBED BY CONSTRUCTION WITH COA STANDARD SPEC. (1012) NATIVE GRASS SEED MIX AND PROCEDURES.

HORIZONTAL
SCALE: 1" = 20'
VERTICAL
SCALE: 1" = 5'

20' 0 20' 40' 80' HORIZ.
5' 0 5' 10' 15' VERT.

COA PROJECT NO: 586082

Design Review Committee	City Engineer Approval	Last Design Update	No. / Day / Yr.	No. / Day / Yr.

GEORGE NEMETH
NEW MEXICO
12284
REGISTERED PROFESSIONAL ENGINEER
5-3-17

NO.	REVISION DESCRIPTION	DATE	BY
5			
4			
3			
2			
1			

Name
Location

KIRTLAND AIR FORCE BASE
BULK FUELS FACILITY
KAFB - 106239 CONVEYANCE LINE

CONVEYANCE LINE INSTALLATION
STA: 13+50 TO STA: 18+00

SMITH ENGINEERING COMPANY
2201 SAN PEDRO NE BLDG 4, SUITE 200
ALBUQUERQUE, NM 87110

JOB NO: 116112
DATE: MAY 3, 2017
SHEET NO: C-204 / 15 OF 27

Q:\SEC-----PROJECTS\116112 KAFB Groundwater Reclam Pipeline\ENGINEERING\CADD\PLANSET\C-204-plan and Profile.dwg May 03, 2017 - 9:35am Saved By: jerrep

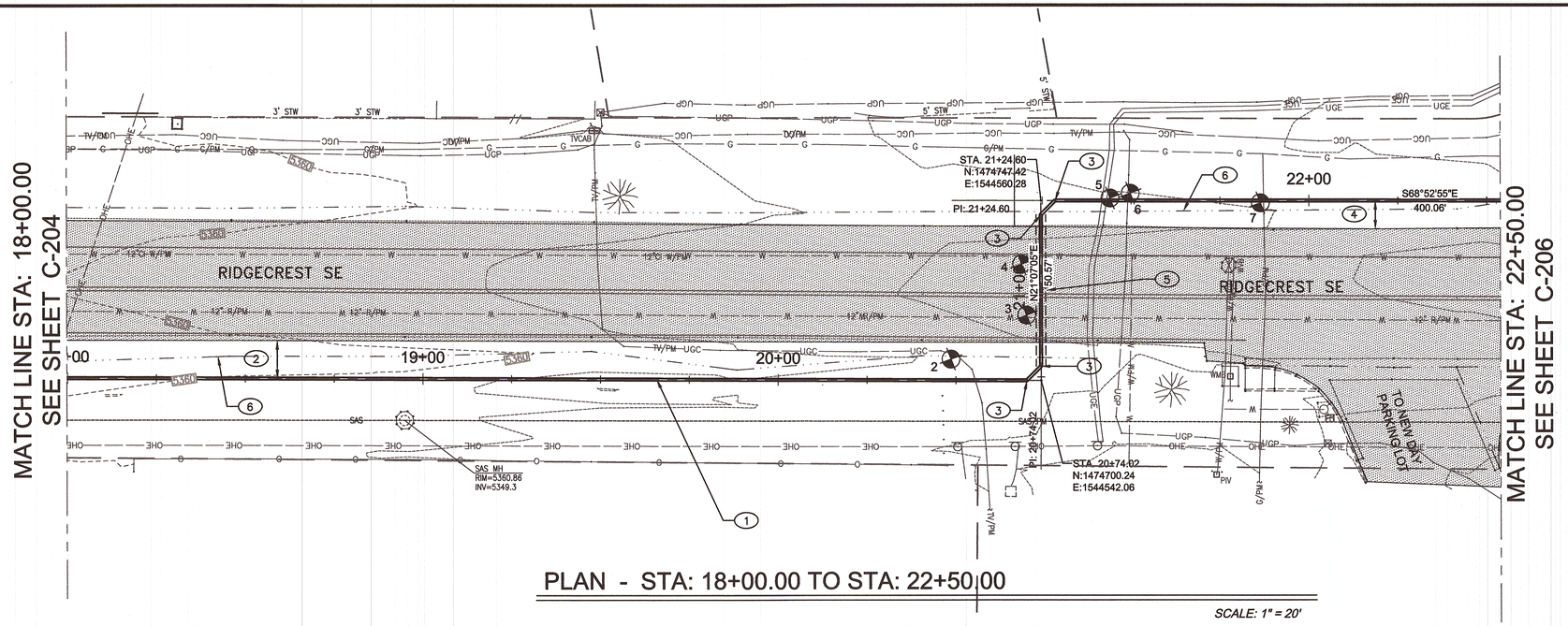

PLAN - STA: 18+00.00 TO STA: 22+50.00

SCALE: 1" = 20'

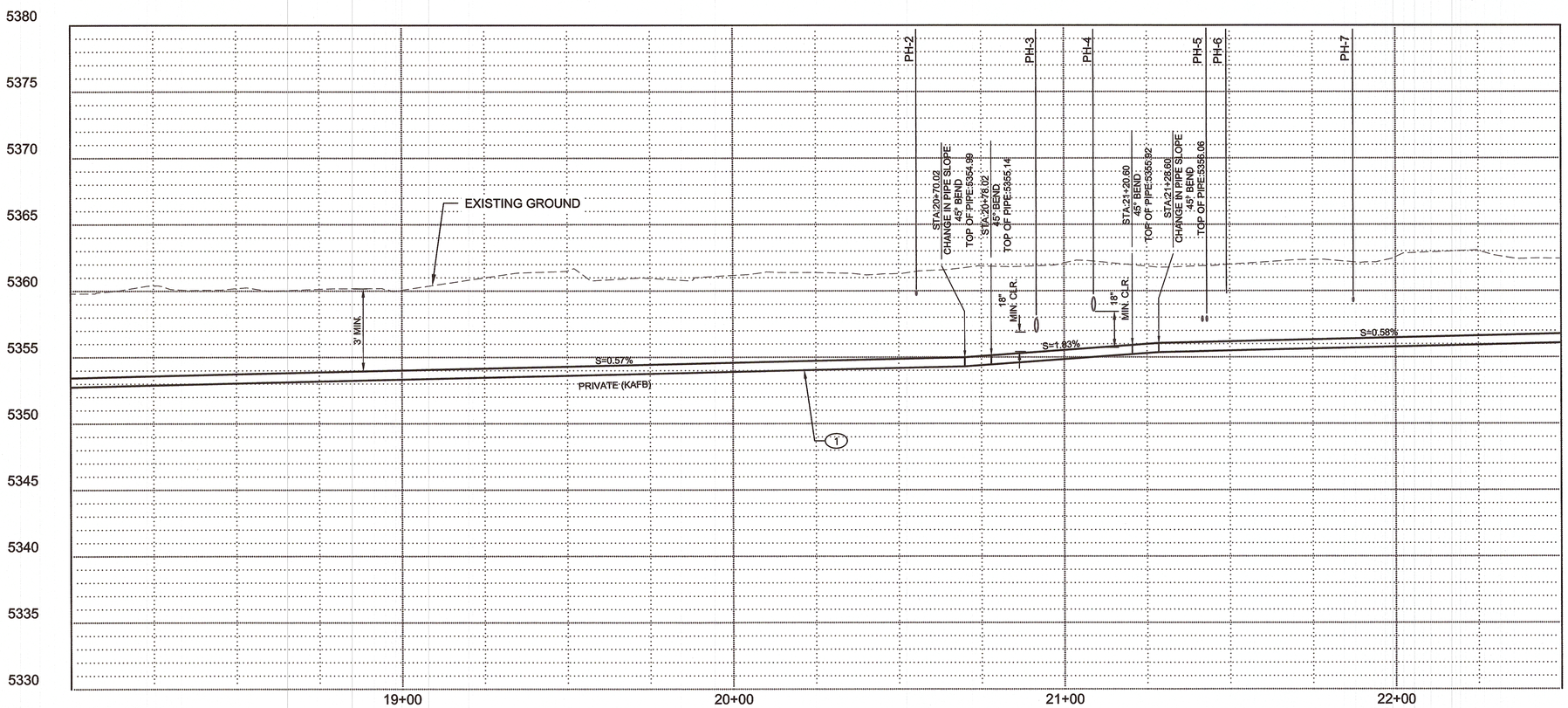

PROFILE - STA: 18+00.00 TO STA: 22+50.00

GENERAL NOTES:

1. MAINTAIN A MINIMUM OF 3 FEET OF SOIL COVER OVER INSTALLED 4"x8" DOUBLE WALL PIPE.
2. PROVIDE A MINIMUM OF 18" OF VERTICAL SEPARATION WHEN CROSSING OVER OR UNDER EXISTING UTILITIES.

KEYED NOTES:

1. NEW PRIVATE 4"x8" HDPE PIPELINE. SEE C-301, DETAIL 2 FOR TYP. TRENCH SECTION.
2. INSTALL PIPELINE 10' OFF EXISTING EDGE OF PAVEMENT. UNLESS OTHERWISE NOTED.
3. 45° BEND
4. INSTALL PIPELINE 8' OFF EXISTING EDGE OF PAVEMENT. UNLESS OTHERWISE NOTED.
5. HORIZONTAL DIRECTIONAL DRILL FROM STA. 20+74.02 TO STA. 21+24.60. EXISTING ASPHALT TO REMAIN UNDISTURBED.
6. RESTORE EXISTING SWALE AFTER PIPELINE INSTALLATION IS COMPLETE. SEED SWALE AND ALL GROUND DISTURBED BY CONSTRUCTION WITH COA STANDARD SPEC. (1012) NATIVE GRASS SEED MIX AND PROCEDURES.

HORIZONTAL
SCALE: 1" = 20'
VERTICAL
SCALE: 1" = 5'

20' 0 20' 40' 60' HORIZ.
5' 0 5' 10' 15' VERT.

POTHOLE TABLE

NO.	DESCRIPTION	DEPTH
2	1.5" DIA. HDPE CATV	17"
3	12" DIA. PVC WATER	50"
4	12" DIA. CI WATER	32"
5	1" DIA. ELEC	48"
6	1" DIA. TEL	28"
7	1.5" DIA. HDPE GAS	31"

COA PROJECT NO: 586082

Design Review Committee	City Engineer Approval	Last Design Update	No. / Day / Yr.	No. / Day / Yr.

GEORGE NEMETH
NEW MEXICO
12284
REGISTERED PROFESSIONAL ENGINEER
6-3-17

NO.	REVISION DESCRIPTION	DATE	BY
5			
4			
3			
2			
1			

Name
Location

KIRTLAND AIR FORCE BASE
BULK FUELS FACILITY
KAFB - 106239 CONVEYANCE LINE

CONVEYANCE LINE INSTALLATION
STA: 18+00 TO STA: 22+50

SMITH ENGINEERING COMPANY
2201 SAN PEDRO NE BLDG 4, SUITE 200
ALBUQUERQUE, NM 87110

JOB NO: 116112
DATE: MAY 3, 2017
SHEET NO: C-205 / 16 OF 27

Q:\SEC-----PROJECTS\116112 KAFB Groundwater Reclam Pipeline\ENGINEERING\CADD\PLANSET\C-205-Plan and Profile.dwg May 03, 2017 - 9:38am Saved By: jerrlep

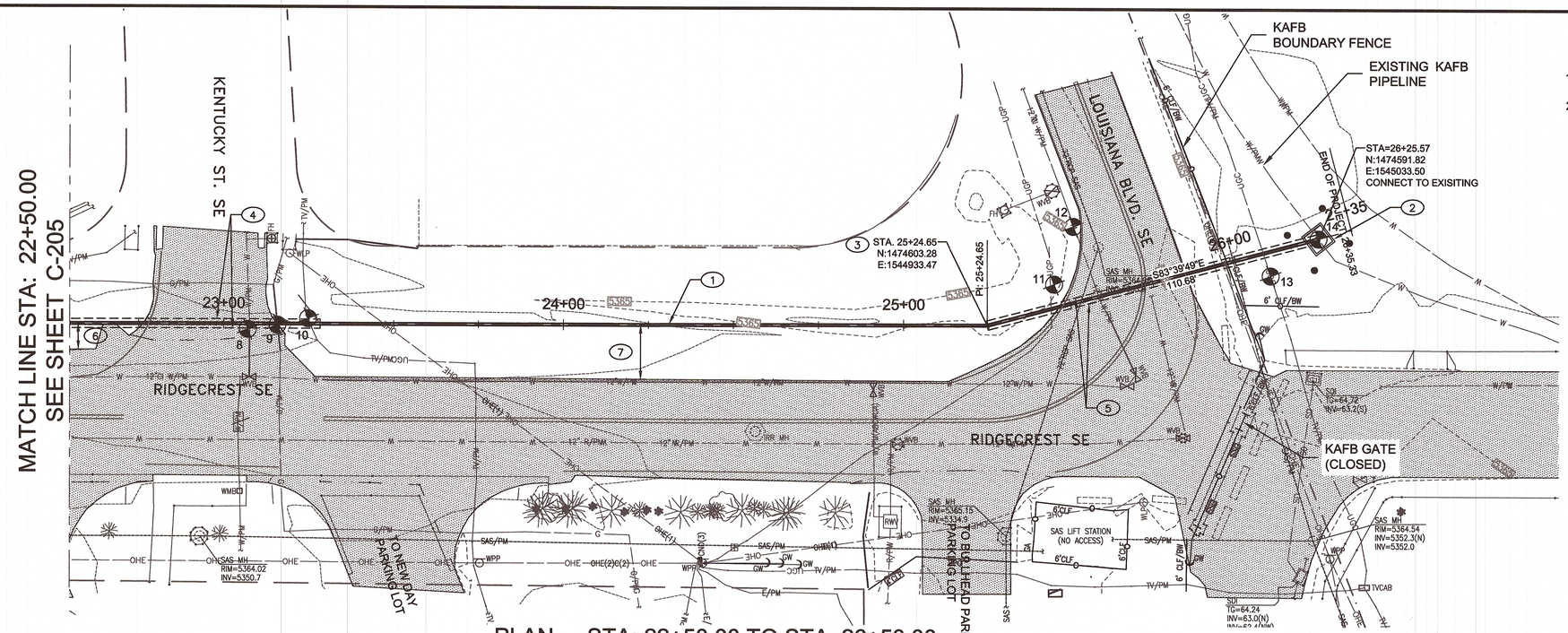

PLAN - STA: 22+50.00 TO STA: 26+50.00

SCALE: 1" = 20'

GENERAL NOTES:

1. MAINTAIN A MINIMUM OF 3 FEET OF SOIL COVER OVER INSTALLED 4"x8" DOUBLE WALL PIPE.
2. PROVIDE A MINIMUM OF 18" OF VERTICAL SEPARATION WHEN CROSSING OVER OR UNDER EXISTING UTILITIES.

KEYED NOTES:

1. NEW PRIVATE 4"x8" HDPE PIPELINE. SEE C-301, DETAIL 2 FOR TYP. TRENCH SECTION
2. NEW REINFORCED PRECAST CONCRETE JUNCTION VAULT W/ - 4 GUARD POSTS. SEE C-301 DETAIL 3.
3. 15° BEND
4. HORIZONTAL DIRECTIONAL DRILL FROM STA. 22+54.19 TO STA. 23+28.32. EXISTING ASPHALT TO REMAIN UNDISTURBED.
5. HORIZONTAL DIRECTIONAL DRILL FROM STA. 25+ 24.65 TO STA. 26+25.57. EXISTING ASPHALT TO REMAIN UNDISTURBED.
6. INSTALL PIPELINE 8' OFF EXISTING EDGE OF PAVEMENT. UNLESS OTHERWISE NOTED.
7. INSTALL PIPELINE 16' OFF EXISTING EDGE OF PAVEMENT. UNLESS OTHERWISE NOTED.

HORIZONTAL
SCALE: 1" = 20'
VERTICAL
SCALE: 1" = 5'

20' 0 20' 40' 60' HORIZ.
5' 0 5' 10' 15' VERT.

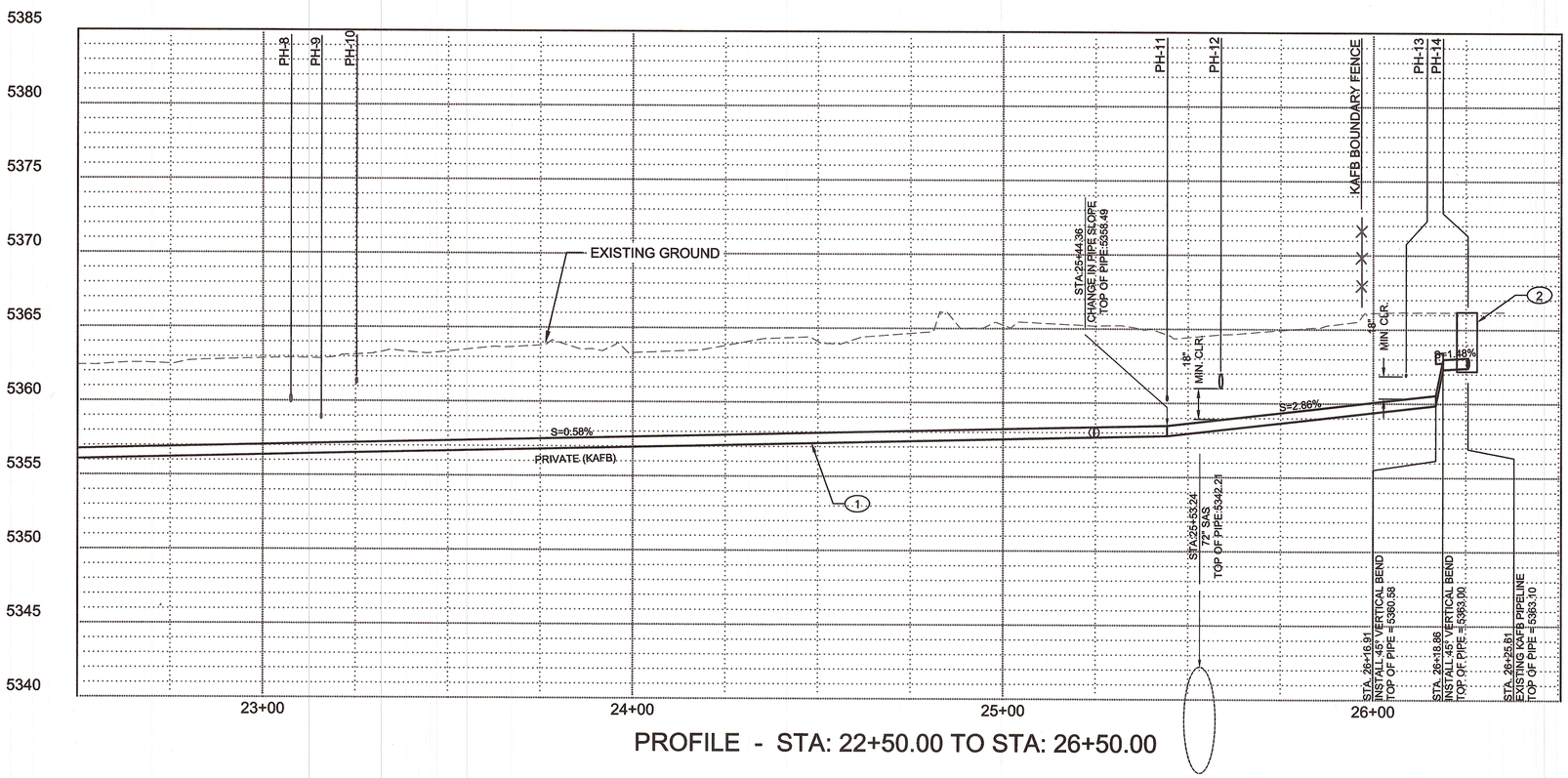

PROFILE - STA: 22+50.00 TO STA: 26+50.00

POTHOLE TABLE

NO.	DESCRIPTION	DEPTH
8	6" DIA PVC WL	29"
9	2" DIA. STEEL GAS	44"
10	2.5" CATV	21"
11	4" DIA. HDPE FIBER OPTIC	49"
12	12" DIA. DI WATER	34"
13	2 - 2" COMM.	48" & 50"
14	8" WATER	37"

DEPTH IS TO TOP OF UTILITY.

COA PROJECT NO: 586082

Design Review Committee	City Engineer Approval	Last Design Update	No. / Day / Yr.	No. / Day / Yr.

GEORGE NEMETH
NEW MEXICO
12284
REGISTERED PROFESSIONAL ENGINEER
5-3-17

NO.	REVISION DESCRIPTION	DATE	BY
1			
2			
3			
4			
5			

Name
Location

KIRTLAND AIR FORCE BASE
BULK FUELS FACILITY
KAFB - 106239 CONVEYANCE LINE

CONVEYANCE LINE INSTALLATION
STA: 22+50 TO STA: 26+50

SMITH ENGINEERING COMPANY
2201 SAN PEDRO NE BLDG 4, SUITE 200
ALBUQUERQUE, NM 87110

JOB NO: 116112
DATE: MAY 3, 2017
SHEET NO: C-206 / 17 OF 27

Q:\SEC----PROJECTS\116112 KAFB Groundwater Reclaim Pipeline\ENGINEERING\CADD\PLANSET\C-206-Plan and Profile.dwg May 03, 2017 - 9:41am Saved By: jamier

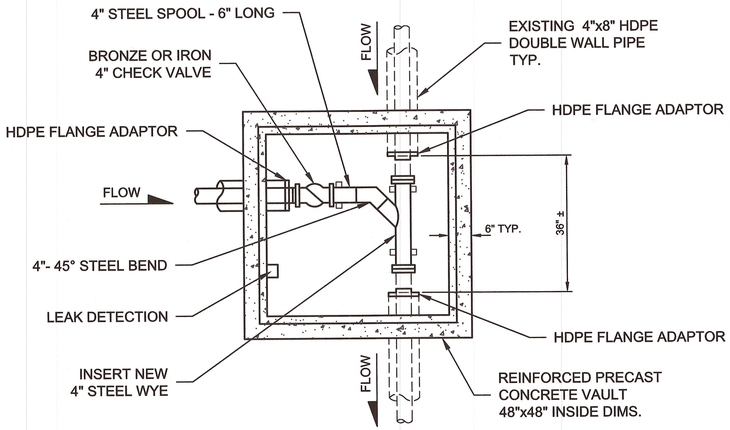

PLAN

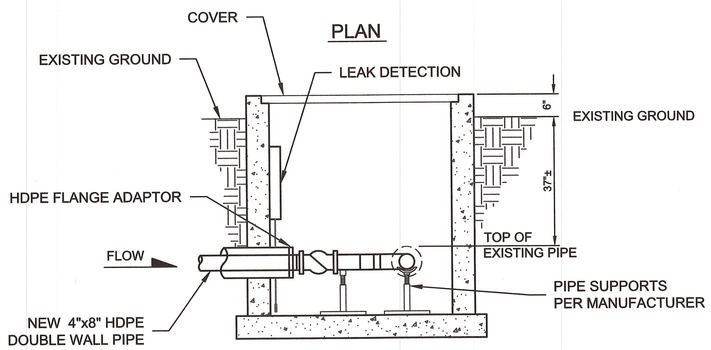

SECTION

3 JUNCTION VAULT DETAIL

C-301
C-206

SCALE: NONE

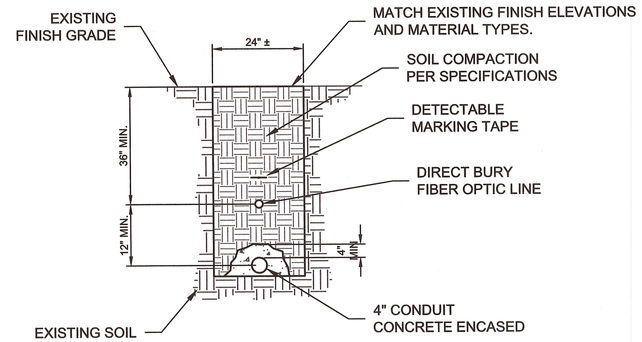

5

C-301
C-201

SCALE: NONE

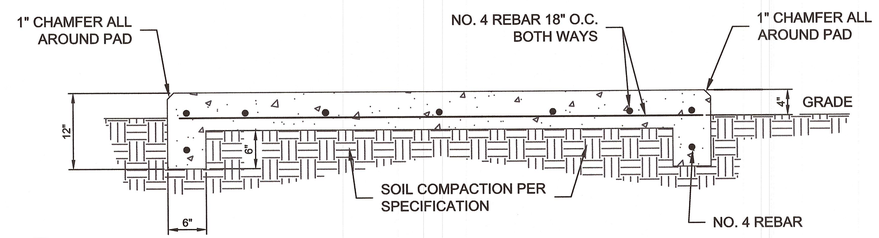

1 CONCRETE TURNDOWN DETAIL

C-301
C-401

SCALE: NONE

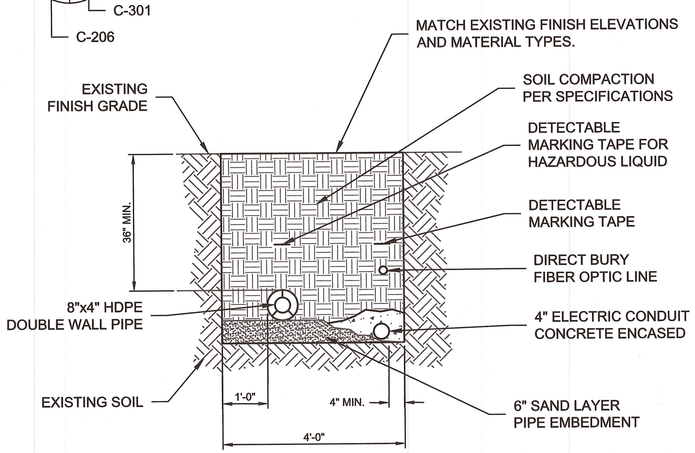

2 TRENCH SECTION

C-301
C-201, C-202, C-203, C-204, C-205, C-206

SCALE: NONE

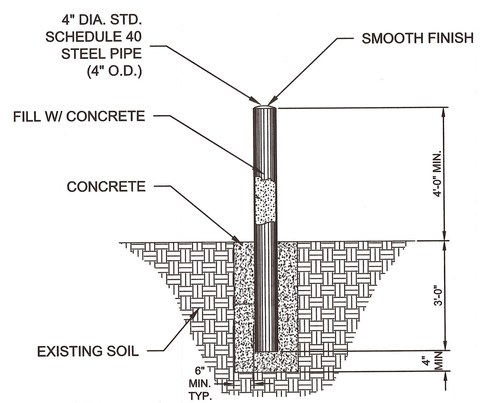

NOTE:
PRIME ENTIRE POST W/2 COATS EXTERIOR ENAMEL PRIMER.
PAINT EXPOSED SURFACE W/2 COATS TRAFFIC YELLOW ENAMEL.

4 GUARD POST DETAIL

C-301
C-201

SCALE: NONE

COA PROJECT NO: 586082

Design Review Committee	City Engineer Approval	Last Design Update	Mo. / Day / Yr.	Mo. / Day / Yr.

GEORGE NEMETH
NEW MEXICO
12284
REGISTERED PROFESSIONAL ENGINEER
5-3-17

Name
Location

NO.	REVISION DESCRIPTION	DATE	BY
5			
4			
3			
2			
1			

KIRTLAND AIR FORCE BASE
BULK FUELS FACILITY
KAFB – 106239 CONVEYANCE LINE

CIVIL DETAILS

SMITH ENGINEERING COMPANY
2201 SAN PEDRO NE BLDG 4, SUITE 200
ALBUQUERQUE, NM 87110

JOB NO: 116112
DATE: MAY 3, 2017
SHEET NO: C-301 / 18 OF 27

G:\SEC——PROJECTS\116112 KAFB Groundwater Reclaim Pipeline\ENGINEERING\CADD\PLANSET\C-301-CIVIL DETAILS.dwg May 18, 2017 – 11:36am Saved By: jerrlep

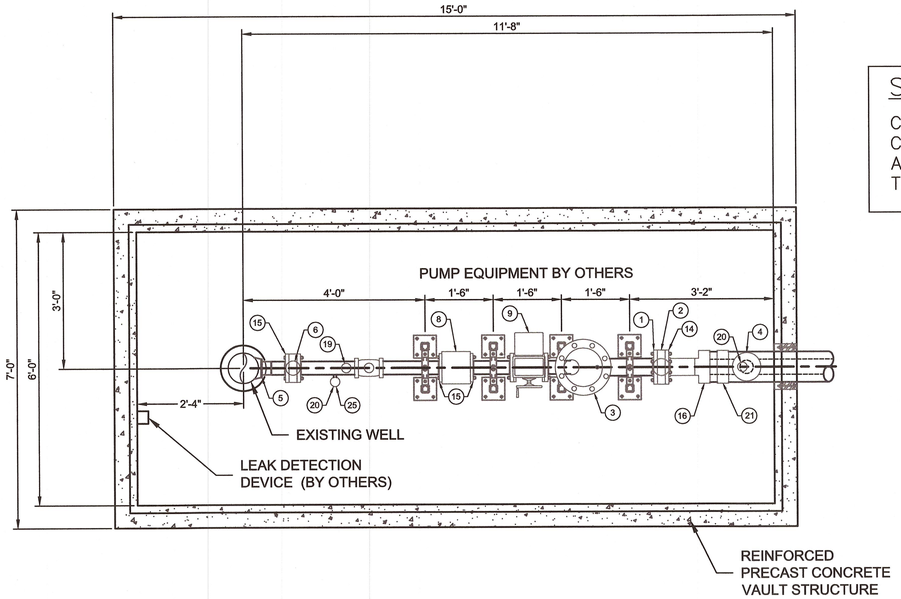

PLAN VIEW

SPECIAL NOTE:

CONCRETE VAULT WITHIN THE COA RIGHT-OF-WAY WILL REQUIRE A SEPARATE BUILDING PERMIT WITHIN THE WORK ORDER PLAN SET.

LIST OF MATERIAL

ITEM NO.	QUANTITY	PART DESCRIPTION
1	4	4" CARBON STEEL FLAT FACE FLANGE
2	1	4" BUTTERFLY VALVE
3	1	AIR/VACUUM RELEASE VALVE (VAL-MATIC MODEL 201C.2, OR APPROVED EQUAL)
4	2	LEAK DETECTION INSPECTION PORT
5	1	WELD ON WELL CONNECTION ADAPTOR, (MONITOR (BAKER MANUFACTURING CO.) MODEL NO. 8123BEZLF FOR 8" WELL WITH 3" FNPT DROP PIPE CONNECTION, 3" MNPT DISCHARGE OR APPROVED EQUAL)
6	1	3" BUTTERFLY VALVE
7	1	3" CHECK VALVE, THREADED
8	1	FLOW METER (SITRANS FM MAGFLOW, MAG5100W, OR APPROVED EQUAL)
9	1	3" CONTROL VALVE (TRIAC V-BALL WITH MODULATING ELECTRIC ACTUATOR, MODEL WE-2640, OR APPROVED EQUAL)
10	1	1" BALL VALVE
11	1	4"x3" CARBON STEEL ECCENTRIC REDUCER
12	–	NOT USED
13	1	WELL VAULT LID (BILCO MODEL JD-3H20, OR APPROVED EQUAL)
14	1	4" HDPE FLANGE ADAPTOR W/BACKING RING AND FULL FACE GASKET
15	6	3" CARBON STEEL FLAT FACE FLANGE
16	1	4" HDPE DUAL-WALL END TERMINATION
17	–	NOT USED
18	–	NOT USED
19	1	BIMETAL THERMOMETER, ASHCROFT MODEL 30-CI-60-R-025-0/250, OR APPROVED EQUAL
20	2	PRESSURE GUAGE, WINTERS INSTRUMENTS PFQ, STAINLESS STEEL, 1/4" BACK CONNECTION, 2-INCH DIAL SIZE, 0-100 PSI, OR APPROVED EQUAL
21	2	SADDLE, JCM 404 SERVICE SADDLE, SIZE 8" X 3/4" OR APPROVED EQUAL
22	1	3/4" BRASS BALL VALVE, FNPT X MNPT
23	–	NOT USED
24	–	NOT USED
25	1	SAMPLE PORT – BRASS BALL VALVE, 1/2" MINIMUM FNPT X MNPT, 150 PSI WORKING PRESSURE, 2-PIECE VALVE STRUCTURE, REVERSIBLE LEVER HANDLE (GRAINGER ITEM # 6GD23 OR EQUAL) WITH HOSE BARB FITTING, 1/2" MNPT, HEX HEAD, MAX PRESSURE 300 PSI (GRAINGER ITEM # 6AFN9 OR EQUAL)

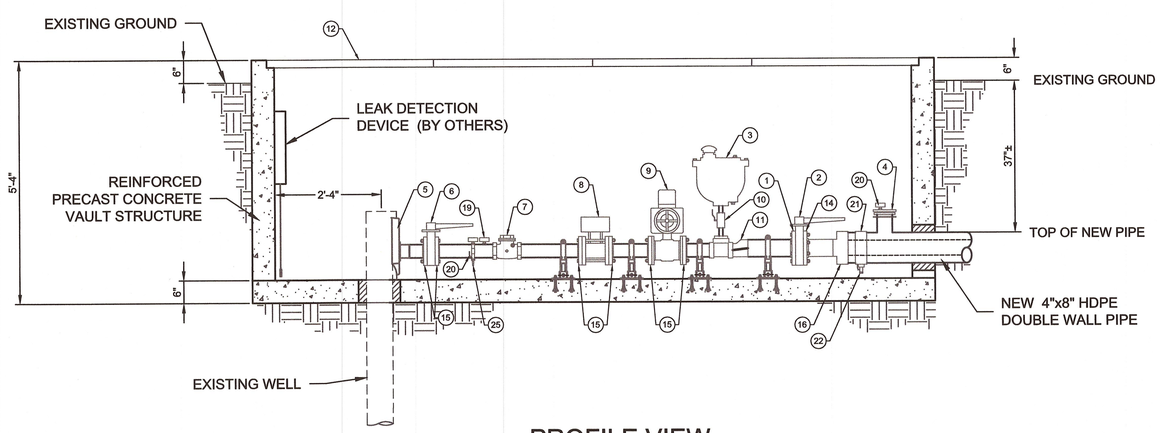

PROFILE VIEW

NOTES:

WELL VAULT

1. STEEL SLEEVE WILL BE INSTALLED BY PRE-CAST VENDOR. PIPE PENETRATION WILL BE SEALED WITH LINKSEAL, MFR BY THUNDERLINE OR EQUAL.
2. FOR ALL EXTERIOR SURFACES, APPLY TWO COATS OF BITUMINOUS COATING FOR A TOTAL 16 MIL DRY FILM THICKNESS. COATING SHALL BE BITUGUARD, WATERPROOF LIQUID MEMBRANE, MFR FRASER BROWN + STRATMORE OR APPROVED EQUAL. APPLY IN ACCORDANCE WITH MFR RECOMMENDATION.
3. WELL SEAL TO FIT 8" DIA. WELL HEAD (I.D.) THAT COMPRESSES A RUBBER SEAL INSIDE THE WELL CASING WITH THREE PORTS. PORTS TO BE 1.25" FNPT, 0.75" FNPT, AND MAXIMUM 1.75" SMOOTH WALLED ACCESS PORT AND VENT.

1 WELL VAULT DETAIL

C-302
C-201

SCALE: NONE

COA PROJECT NO: 586082

Design Review Committee	City Engineer Approval	Last Design Update	Mo. / Day / Yr.	Mo. / Day / Yr.

GEORGE NEMETH
NEW MEXICO
12284
REGISTERED PROFESSIONAL ENGINEER
5-3-17

NO.	REVISION DESCRIPTION	DATE	BY
5			
4			
3			
2			
1			

Name
Location

KIRTLAND AIR FORCE BASE
BULK FUELS FACILITY
KAFB - 106239 CONVEYANCE LINE

CIVIL DETAILS

SMITH ENGINEERING COMPANY
2201 SAN PEDRO NE BLDG 4, SUITE 200
ALBUQUERQUE, NM 87110

JOB NO: 116112
DATE: MAY 3, 2017
SHEET NO: C-302 19 OF 27

Q:\SEC-----PROJECTS\116112 KAFB Groundwater Reclaim Pipeline\ENGINEERING\CADD\PLANSET\C-302-CIVIL DETAILS.dwg May 30, 2017 - 8:01am Saved By: jarrlep

KEYED NOTES:

1. NEW CONCRETE ELECTRICAL EQUIPMENT PAD 5'6"x18'0". SEE DETAIL 1 ON C-301.
2. 3" LAYER OF CRUSHED GRAVEL
3. NEW CHAIN LINK FENCE
4. DOUBLE SWING GATE 8' WIDE OPENING
5. EXISTING FENCE
6. EXISTING WALL
7. NEW WELL VAULT
8. NEW GUARD POST. SEE DETAIL 4 ON C-301.
9. NEW 8"X4" DOUBLE WALL HDPE PIPE.

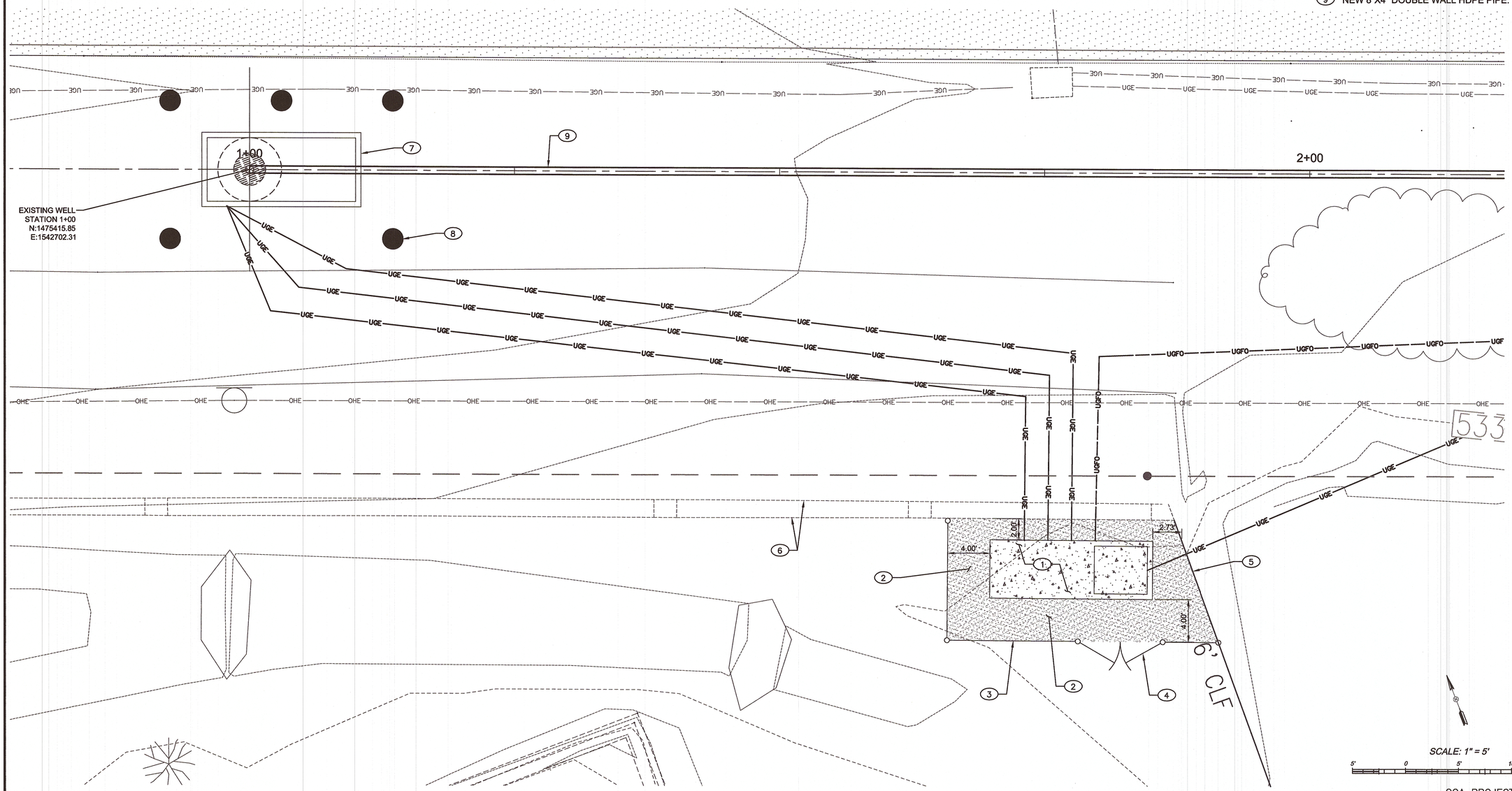

ELECTRICAL EQUIPMENT YARD ENLARGED PLAN

SCALE: 1" = 5'

COA PROJECT NO: 586082

Design Review Committee	City Engineer Approval	Last Design Update	No. / Day / Yr.	No. / Day / Yr.

GEORGE NEMETH
NEW MEXICO
12284
REGISTERED PROFESSIONAL ENGINEER
5-3-17

NO.	REVISION DESCRIPTION	DATE	BY
5			
4			
3			
2			
1			

Name
Location

KIRTLAND AIR FORCE BASE
BULK FUELS FACILITY
KAFB - 106239 CONVEYANCE LINE

ELECTRICAL EQUIPMENT YARD ENLARGED PLAN

SMITH ENGINEERING COMPANY
2201 SAN PEDRO NE BLDG 4, SUITE 200
ALBUQUERQUE, NM 87110

JOB NO: 116112
DATE: MAY 3, 2017
SHEET NO: C-401 / 20 OF 27

Q:\SEC---PROJECTS\116112 KAFB Groundwater Reclam Pipeline\ENGINEERING\CADD\PLANSET\C-401 ELECTRICAL EQUIPMENT YARD ENLARGED PLAN.dwg May 03, 2017 - 9:46am Saved By: jamiev

NAMEPLATE REQUIREMENTS

ELECTRICAL PANELS

PANEL L1
208/120V, 3PH, 4W
225A, FED FROM H1
VIA XFMR T-L1

EQUIPMENT CONTROLS

CWP-VFD
208/120V, 3PH, 4W
5HP, FED FROM L1

RECEPTACLES

PNL - CKT #

J-BOXES

PWR	IT	FIRE
L1-1 120V	COM	FA NAC
NO PAINT	ORANGE COVER	RED COVER

SPECIFICATIONS

1. NAMEPLATE: 1/16" PHENOLIC PLASTIC LAMINATE, TWO FLAT HEAD SCREWS
2. FINISHED AREA WIRING DEVICES: ADHESIVE LABELS, WHITE W/ BLACK TEXT
3. J-BOXES: USE PERMANENT INK MARKER AND PAINT AS NOTED
4. OUTDOOR AND HARSH ENVIRO WIRING DEVICES: MARKER ON INSIDE OF COVER
5. IN PUBLIC AREAS SUCH AS LOBBIES, CONF. ROOMS, ETC, LABEL INSIDE OF RECEPTACLE COVERS AND EXPOSED JBOX COVERS USING MARKER. PLACE A DOT OF PAINT ON OUTSIDE OF SPECIAL SYSTEMS BOXES.

LIGHTING

LIGHTING SYMBOLOGY GENERAL NOTES

1. USING THE LUMINAIRE TAG FOR REFERENCE, REFER TO THE LUMINAIRE (FIXTURE) SCHEDULE FOR THE DESCRIPTION OF EACH FIXTURE TYPE.

A a — LUMINAIRE TAG, REFER TO SCHEDULE; LOWER CASE LETTER INDICATES SWITCHLEG (WHERE APPLICABLE)

EXIT LIGHTING

EXIT SIGN - SINGLE FACE

EXIT SIGN - DUAL FACE

SPECIFICATIONS

1. EDGE LIT, LED EXIT SIGNS.
2. INTEGRAL 90 MIN BATTERY PACK
3. SELF DIAGNOSTIC
4. INTEGRAL TEST SWITCH

DUAL HEAD EMERGENCY LIGHT WITH INTEGRAL BATTERY PACK

E/NL — EMERGENCY/EGRESS LIGTHING SHOWN HATCHED AND/OR TAGGED WITH "E" (AS IN "AE") UNSWITCHED WHERE NOTED NL

1. EMERGENCY/EGRESS LIGHTING SHALL USE SELF CONTAINED BATTERY PACKS, UNO.
2. INTEGRAL 90 MIN BATTERY PACK
3. SELF DIAGNOSTIC
4. INTEGRAL TEST SWITCH

GENERAL SPECIAL SYSTEMS INSTALLATION REQUIREMENTS

1. ROUTE UNSWITCHED CIRCUIT LET TO ALL EMERGENCY/EGRESS LIGHTING AND EXIT SIGNS FOR BATTERY CHARGING AND TRANSFER CONTROL.
2. EMERGENCY LIGHTING TO BE SWITCHED WITH ADJACENT AREA LIGHTING, UNLESS NOTED "NL" FOR NIGHT LIGHT.

ABBREVIATIONS

A.	AMPERE	LOTO	LOCK OUT TAG OUT
AC	ABOVE COUNTER	LTG	LIGHT OR LIGHTING
AFF	ABOVE FINISHED FLOOR	MCB	MAIN CIRCUIT BREAKER
AIC	AMP INTERRUPTING CAPACITY	MCC	MOTOR CONTROL CENTER
A/V	AUDIO VISUAL	MCP	MOTOR CIRCUIT PROTECTOR
ATS	AUTOMATIC TRANSFER SWITCH	MIN	MINIMUM
BLDG	BUILDING	MH	METAL HALIDE
C	CONDUIT	M.L.O	MAIN LUGS ONLY
CKT	CIRCUIT	MNS	MASS NOTIFICATION SYSTEM
CM	CONTROL MODULE	MRS	MOTOR RATED SWITCH
COA	CITY OF ALBUQUERQUE	MSB	MAIN SWITCH BOARD
CONN	CONNECT OR CONNECTION	MTD	MOUNTED
CT	CURRENT TRANSFORMER	MTS	MANUAL TRANSFER SWITCH
DIM	DIMENSION	MV	MEDIUM VOLTAGE
EA	EACH	N.I.C.	NOT IN CONTRACT
EC	ELECTRICAL CONTRACTOR	NL	NIGHT LIGHT (UNSWITCHED)
EF	EXHAUST FAN	NTS	NOT TO SCALE
ELEC	ELECTRIC,ELECTRICAL	Ø	PHASE
EMER	EMERGENCY	OL	OVERLOAD
EPO	EMERGENCY POWER OFF	OE	OVER HEAD ELECTRIC
EWC	ELECTRIC WATER COOLER	PS	PULL STRING
FA	FIRE ALARM	RECPT	RECEPTACLE
FACP	FIRE ALARM CONTROL PANEL	RGS	RIGID GALVANIZED STEEL
FLA	FULL LOAD AMPS	SPD	SURGE PROTECTION DEVICE
FS	FLOW SWITCH	TS	TAMPER SWITCH
FSD	FIRE SMOKE DAMPER	TYP.	TYPICAL
GC	GENERAL CONTRACTOR	TVSS	TRANSIENT VOLTAGE SURGE SUPPRESSION
GFI	GROUND FAULT INTERRUPTER		
GND	GROUND	UG	UNDERGROUND
HOA	HAND-OFF-AUTO	UNO	UNLESS NOTED OTHERWISE
HP	HORSEPOWER	V	VOLTAGE
HPS	HIGH PRESSURE SODIUM	WH	WATER HEATER
HTR	HEATER	WP	WEATHER PROOF
J-BOX	JUNCTION BOX	WR	WEATHER RATED
KCM	THOUSAND CIRCULAR MILLS	XFMR	TRANSFORMER

SYMBOL NOTATIONS USED

a S2 — SWITCHLEG TO LIGHTS (OMITTED WHERE THE LTG SERVED IS OBVIOUS)

SPECIFICATION NOTES:

2 = DOUBLE POLE
3 = THREE WAY
4 = FOUR WAY
D = DIMMER
EP = EXPLOSION PROOF
H = HORSEPOWER RATED
K = KEY OPERATED
LV = LOW VOLTAGE
M = MANUAL MOTOR STARTER
P = PILOT LIGHT
T = TIMER

SWITCHING INSTRUCTIONS:
LOWER CASE LETTER DESIGNATES A SWITCHLEG, LETTER WILL BE SHOWN NEXT TO EACH FIXTURE CONTROLLED BY SWITCH

AC GFI L1-1 — PANEL NAME & CIRCUIT NUMBER

SPECIFICATION NOTES:

GFI = INTEGRAL GROUND FAULT TRIP MODULE
IG = ISOLATED GROUND
MG = MARINE GRADE
TL = TWIST-LOCK
WP = WEATHER RESISTANT RECEPTACLE WITH METAL WEATHERPROOF WHILE IN USE COVER

MOUNTING REQUIREMENTS:

48" = MOUNT AT 48 INCHES ABOVE FINISHED FLOOR
AC = MOUNT ABOVE COUNTER 4" ABOVE BACK-SPLASH
C = CEILING MOUNT

A a — LUMINAIRE TAG, REFER TO SCHEDULE; LOWER CASE LETTER INDICATES SWITCHLEG (WHERE APPLICABLE)

L1-1 — PANEL NAME & CIRCUIT NUMBER

E/NL — E INDICATES BACK UP POWERED; NL INDICATES NIGHT LIGHT

LIGHTING CONTROLS

WALL SWITCHES

- $ — SINGLE POLE, SINGLE THROW SWITCH
- $2 — TWO POLE, SINGLE THROW
- $3 — SINGLE POLE, DOUBLE THROW 3-WAY
- $4 — TWO POLE, DOUBLE THROW 4-WAY
- D — SLIDE DIMMER, COMMERCIAL GRADE
- $TS — TIME SWITCH, 60 MIN. OVERRIDE U.N.O.

SPECIFICATIONS

1. 20A, 120V/277V RATED
2. SCREW TYPE TERMINALS, W/ GND TERM.
3. NYLON COVER PLATE
4. FINISHED AREAS: COMMERCIAL GRADE, ROCKER TYPE SWITCH
5. UNFINISHED AREAS: HEAVY DUTY TOGGLE SWITCH
6. DEVICE AND COVER PLATE COLOR PER ARCHITECT

OCCUPANCY SENSORS

- OS — WALL MOUNTED W/ PUSHBUTTON
- OS — AIMABLE WALL MOUNTED
- OS — 360° CEILING MOUNTED, CNTR IN RM
- DS — DAYLIGHT SENSOR
- DS — DOOR FRAME SWITCH

SPECIFICATIONS

1. COMBINATION INFRARED AND ULTRASONIC
2. ADJUSTABLE OFF DELAY, SET AT 15 MIN.
3. DAYLIGHT SENSING, ADJUSTABLE SENSITIVITY
4. WALL MNT: PUSH ON, AUTO OFF "VACANCY TYPE"
5. CLNG MNT: 360°, 1,000 SQ FT COVERAGE
6. AIMABLE WALL MNT SHALL BE ON ADJUSTABLE MOUNTING ASSEMBLY AT 18" BELOW CEILING AIMED AWAY FROM TRAFFIC PASSING THE SPACE.

AUTOMATED CONTROLS

- LC — LIGHTING CONTACTOR
- PC — PHOTOCELL
- TC — TIMECLOCK
- LCP — LIGHTING CONTROL PANEL
- LCS — LIGHTING CONTROL STATION
- WDP — WALL MOUNTED DIMMER PANNEL

SPECIFICATIONS

1. SCREW CLAMP, CONCEALED TERMINALS
2. TIME CLOCKS: 24 HR, 7 DAY, ASTRONOMICAL & HOLIDAY PROGRAMMING, BATTERY BACK UP.
3. LCP: PROGRAMMABLE, MULTI-CIRCUIT DIMMER PANEL WITH SINGLE INPUT AND MULTIPLE 20A OUTPUT CIRCUITS WITH INDIVIDUAL OCPDs; AND DIMMER MODULES OR ON/OFF CONTACTS AS REQUIRED.
4. LCS: WALL MOUNTED CONTROL STATION WITH ON/OFF, SCENE SELECTION, & LV CABLE TO CENTRAL LCP OR ADDRESSIBLE POWER PACKS. LCS SHALL BE ABLE TO COMMUNICATE DISCRETE COMMANDS TO MULTIPLE POWER PACKS OR "SWITCHLEGS" TO SET THEM AT DIFFERENT DIMMING LEVELS
5. WDP: WALL MNT LOCAL DIMMER PANEL WITH SINGLE 20A INPUT AND 4 OR MORE DIMMABLE OUTPUTS, AND MULTIPLE PROGRAMMED SETTING OPTIONS.
6. PROVIDE START UP AND PROGRAMMING FOR ALL LIGHTING CONTROL SYSTEMS AND DEVICES.

RECEPTACLES

RECEPTACLES

- SIMPLEX RECEPTACLE
- DUPLEX RECEPTACLE
- QUADRAPLEX RECEPTACLE
- FLOOR MOUNTED RECEPTACLE
- CEILING MOUNTED RECEPTACLE
- SPECIAL PURPOSE RECEPTACLE
- SWITCHED RECEPTACLE

SPECIFICATIONS

1. 20A, 120V RATED, SCREW TYPE TERMINALS, W/ GND TERM.
2. NYLON COVER PLATE
3. FINISHED AREAS: COMMERCIAL GRADE
4. LABS, HALLS, MECHANICAL ROOMS, ETC: HEAVY DUTY
5. PATIENT CARE AREAS: HOSPITAL GRADE.
6. DAMP LOCATIONS: GFCI TYPE
7. WET LOCATIONS: GFCI TYPE, METAL WEATHERPROOF WHILE IN USE COVER.
8. OCC. SENSOR CONTROLLED: PROVIDE WITH SYMBOL:
9. DEVICE AND COVER PLATE COLOR PER ARCHITECT

ELECTRICAL EQUIPMENT

DISTRIBUTION EQUIPMENT

- ELECTRICAL BRANCH PANEL
- T — TRANSFORMER
- J — JUNCTION BOX
- FB1 — FLOORBOX
- SURFACE RACEWAY
- EQUIP MOUNTED ON CHANNEL RACK

SPECIFICATIONS

1. PANELS: COPPER PH, N, G BUSSING, HINGED DOOR, REMOVABLE FRONT COVE
2. TRANSFORMERS: COPPER, 2 WINDING, 3-PHASE DELTA TO WYE ON CONCRETE PAD WITH ISOLATORS, UNLESS NOTED TO BE SUSPENDED.
3. ALL FLOOR-BOXES SHALL BE PROVIDED WITH RECEPTACLES, AND WHERE APPLICABLE, DATA MOUNTING PLATES.
4. ALL TRANSFORMERS SHALL MEET U.S. DEPARTMENT OF ENERGY 2016 MANDATED MINIMUM EFFICIENCY.

SITE ELECTRICAL

SITE WIRING

- CIRCUIT WIRING
- UNDERGROUND CIRCUIT WIRING
- EXISTING UNDERGROUND
- MULT-CONDUIT UNDERGROUND (CONCRETE ENCASED WHERE NOTED)
- UGE — UNDERGROUND HV/MV UTILITY LINE
- OHE — OVERHEAD HV/MV UTILITY LINE
- UGFO — UNDERGROUND FIBER OPTIC
- STUB UP / TURN DOWN

EXTERIOR IN GRADE EQUIPMENT

- PB — IN GRADE 600V PULL BOX
- CP — IN GRADE COMMUNICATIONS PULL BOX
- EM — ELECTRICAL MANHOLE
- CM — COMMUNICATIONS MANHOLE
- MV PB — UNDERGROUND MV PULL BOX

EXTERIOR ABOVE GRADE EQUIPMENT

- TRANSFORMER PAD
- T — POLE MOUNTED TRANSFORMER
- UTILITY POLE
- EQUIPMENT MOUNTING RACK
- MV SW — MV PAD MOUNT SWITCH
- C — COMMUNICATIONS SERVICE ENCLOSURE

SPECIFICATIONS

1. ELECTRICAL BURIAL DEPTH:
   1.1. 24" AT VEHICLE ACCESSED AREAS.
   1.2. 18" AT AREAS INACCESSIBLE TO VEHICLES.
2. COMMUNICATIONS BURIAL DEPTH: 18"
3. PROVIDE 12" SEPARATION FROM UTILITIES.
4. ALL SITE UNDERGROUND RACEWAYS SHALL BE BEDDED IN SAND OR SELECT FILL, LARGE ROCKS SHALL BE REMOVED FROM BACKFILL, UNLESS NOTED TO BE CONCRETE ENCASED.
5. MANHOLES SHALL BE CONCRETE, RE-ENFORCED AS REQUIRED, GROUTED AND SEALED, EARTH GROUNDED. LIDS: ENGRAVED, BOLT DOWN COVERS, CONCRETE OR CAST IRON (SEE DETAILS)
6. PULL BOXES FOR 600V BRANCH CIRCUITS AND COMMUNICATIONS SHALL BE 24"L x 12"W x 18"D, POLYMER CONCRETE, UNO (SEE DETAILS)
7. EQUIPMENT PADS SHALL BE 10" THICK, 3000 PSI CONCRETE, WITH #3 REBAR GRID AT 9" ON CENTER, UNO (SEE DETAILS).
8. ENCLOSURES SHALL BE OUTDOOR RATED
9. EQUIPMENT MOUNTING RACKS SHALL BE GALVANIZED STEEL TUBE AND GALVANIZED SLOTTED U-CHANNEL, CONCRETE EMBEDDED OR SET ON PADS (SEE DETAILS)

ELECTRICAL ONE LINE

ONE LINE

- MOLDED/INSULATED CASE BREAKER
- DRAWOUT CIRCUIT BREAKER, AIR TYPE
- DRAWOUT CIRCUIT BREAKER, VAC TYPE
- THERMAL OVERLOAD
- FUSED DISCONNECT SWITCH
- FUSE, HOLDER & PULLER
- POTENTIAL TRANSFORMER
- CURRENT TRANSFORMER
- CT ENCLOSURE
- UTILITY METER
- TVSS — SURGE PROTECTION DEVICE
- GEN — GENERATOR REMOTE ANNUNCIATION PNL
- X — MOTOR, "X" INDICATING HORSE POWER
- AUTOMATIC TRANSFER SWITCH
- ST — SHUNT TRIP (K=KIRK KEY INTERLOCK, RT=REMOT TRIP)
- K — KIRK-KEY

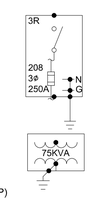

SPECIFICATIONS

1. CIRCUIT BREAKERS SHALL BE BOLT ON TYPE, WITH OVERLOAD AND INSTANTANEOUS TRIP COMPONENTS.
2. DISTRIBUTION BREAKERS SHALL HAVE DIGITAL TRIP UNITS WITH ADJUSTABLE LSIG TRIP SETTINGS.
3. CONTROL POWER TRANSFORMERS SHALL BE ENCLOSED/ENCAPSUALTED, MIN .5% ACCURACY

EQUIPMENT CONTROLLERS

DISCONNECTS AND OCPD

- CB — ENCLOSED CIRCUIT BREAKER
- DISCONNECT SWITCH
- $H — HORSE POWER RATED TOGGLE SWITCH
- $M — MANUAL MOTOR STARTER W/ OVERLOADS
- $U — DISCONNECT MOUNTED ON UNISTRUT

SPECIFICATIONS

1. HEAVY DUTY
2. ALL ENCLOSED CBs, SWITCHES, AND DISCONNECTS SHALL HAVE INTEGRAL LOCK OUT DEVICES.
3. ENCLOSED CIRCUIT BREAKERS: OVERLOAD AND INSTANTANEOUS TRIP COMPONENTS, LOCK OUT PROVISIONS, AND INTEGRAL SHUNT TRIP MODULES
4. DISCONNECTS: QUICK-MAKE/BREAK LOAD INTERRUPTER KNIFE SWITCH, HINGED METAL ENCLOSURE, EXTERNAL OPERABLE HANDLE, LOCKABLE ON OR OFF.

MOTOR AND EQUIPMENT CONTROLS

- MAGNETIC STARTER - FVNR U.N.O.
- COMBINATION STARTER & DISCONNECT
- MAGNETIC CONTACTOR (LTG CONTACTOR)
- VFD — VARIABLE FREQUENCY DRIVE
- EPO — EMERGENCY POWER OFF PUSHBUTTON
- HOA — "HAND-OFF-AUTO" CONTROL SELECTOR

SPECIFICATIONS

1. STARTERS: N.O. & N.C. AUXILLARY CONTACTS, FUSED CPT, ADJUSTABLE OVERLOAD, SIZED PER MOTOR HP, REMOTE START INPUT, HOA SWITCH
2. LIGHTING CONTACTORS: 20A MIN PER POLE, 120/277V RATED, HOA SWITCH, HINGED METAL ENCLOSURE, SCREW TERMINALS, QTY OF POLES AS NOTED.
3. PROVIDE INTEGRAL DISCONNECT FOR STARTERS, VFDs, ETC, LOCKABLE ON OR OFF.
4. EMERGENCY POWER OFF PUSHBUTTON SHALL BE A RED MUSHROOM HEAD, LATCHING CONTACT, ENGRAVED.

SPECIAL SYSTEMS

GENERAL SPECIAL SYSTEMS INSTALLATION REQUIREMENTS

1. PROVIDE 4" SQUARE DEEP J-BOX FOR ALL DATA OUTLETS, FIRE ALARM COMPONENTS, SECURITY, A/V AND OTHER SPECIAL SYSTEMS EQUIPMENT AND DEVICES, UNO.
2. THE GENERAL, ELECTRICAL, AND SPECIAL SYSTEMS CONTRACTORS SHALL COORDINATE SCOPE BEFORE BID AND ALL DEVICE AND EQUIPMENT LOCATIONS BEFORE ROUGH IN.
3. PROVIDE SINGLE GANG REDUCER FOR FLUSH MOUNT DEVICES THAT HAVE SINGLE GANG COVER PLATES.
4. PROVIDE RACEWAY SYSTEM FROM ALL SPECIAL SYSTEMS EQUIPMENT, DEVICES, ETC TO THEIR RESPECTIVE SOURCE EQUIPMENT, RACK, ETC.
5. WHERE SPECIAL SYSTEMS CABLING IS PERMITTED TO BE ROUTED IN AIR THROUGH ACCESSIBLE ABOVE CEILING SPACE, USE J-HOOKS AND CABLE TIES TO GROUP, SECURE AND NEATLY ROUTE CABLE TO SOURCE. ROUTE PARALLEL/PERPENDICULAR TO STRUCTURAL ELEMENTS. PROVIDE SLEEVES THROUGH INACCESSIBLE SECTIONS OF HOME-RUNS.

TELECOM OUTLETS & DEVICES

- DATA OUTLET
- COMINATION DATA AND VOICE OUTLET
- VOICE OUTLET
- FLOOR MOUNTED DATA OUTLET
- AVB — AUDIO VIDEO INPUT JACK BOX
- WAP — WIRELESS ACCESS POINT
- TV — A/V OUTLET BOX
- TV — TV/CATV OUTLET

FIRE ALARM AND (VOICE/ MASS) NOTIFICATION DEVICES

- HORN
- COMBINATION HORN/STROBE
- COMBINATION SPEAKER/STROBE
- S WP — SPEAKER, WALL MOUNT, WEATHERPROOF
- cd — VISUAL ONLY, CEILING MOUNTED, CLEAR LENS, cd=CANDELA RATING/SETTING
- cd — VISUAL ONLY, WALL MOUNTED, CLEAR LENS, cd=CANDELA RATING/SETTING
- M cd — MNS, CEILING MOUNTED, AMBER LENS, cd=CANDELA RATING/SETTING
- M cd — MNS, WALL MOUNTED, AMBER LENS, cd=CANDELA RATING/SETTING
- W C cd — COMBINATION SPEAKER/VISUALS, CEILING MOUNTED, AMBER AND CLEAR LENS, cd=CANDELA RATING/SETTING, W=WATTAGE
- W cd — COMBINATION SPEAKER/VISUALS, WALL MOUNTED, AMBER AND CLEAR LENS, cd=CANDELA RATING/SETTING, W=WATTAGE
- W WP cd — COMBINATION SPEAKER/VISUALS, WALL MOUNTED, WEATHERPROOF, AMBER AND CLEAR LENS, cd=CANDELA RATING/SETTING, W=WATTAGE

FIRE DETECTION DEVICES

- F — MANUAL PULL STATION
- S — AREA SMOKE DETECTOR
- S SB — AREA SMOKE DETECTOR WITH SOUNDER BASE
- CARBON MONOXIDE DETECTOR
- AREA HEAT DETECTOR
- S — DUCT MOUNTED SMOKE DETECTOR
- H — HOOD FIRE SUPPRESSION SYSTEM RELAY
- VS — VALVE SUPERVISORY SWITCH
- WF — WATER FLOW SWITCH

FIRE ALARM SYSTEM CONTROLS

- FACP — FIRE DETECTION & ALARM CONTROL PNL
- MNS — MASS NOTIFICATION SYSTEM
- NAC — NOTIFICATION CIRCUIT EXPANSION PNL
- FAA — FACP REMOTE ANNUNCIATOR PANEL
- LOC — LOCAL OPERATOR CONSOLE
- HFS — KITCHEN HOOD FIRE SUPPRESSION PNL
- AOM — ADDRESSABLE OUTPUT CONTROL MODULE
- MOTORIZED SMOKE FIRE DAMPER
- LT — LOW TEMPERATURE SWITCH
- MM — MONITOR MODULE

ACCESS CONTROL & INTRUSTION DETECTION SYSTEMS

- CR — CARD READER FOR CAC SMART CARD
- KP — KEY PAD
- P1 — CONCEALED DOOR POSITION SWITCH
- P2 — OVERHEAD DOOR POSITION SWITCH
- REX — REQUEST TO EXIT
- E1 — ELECTRIFIED EXIT PUSH BAR
- DP — DOOR OPEN PUSHBUTTON
- J CCTV — CCTV CAMERA, INFRASTRUCTURE ONLY

FA SPECIFICATION AND INSTALL REQUIREMENTS

1. REQUIREMENTS SHOWN HERE ARE MINIMUM BASIC REQUIREMENTS, ADDITIONAL REQUIREMENTS ELSEWHERE.
2. FA DEVICES SHALL BE ADDRESSABLE.
3. STROBES: XENON TYPE, BUILDING WIDE FLASH SYNCHRONIZED, WITH FIELD ADJUSTABLE INTENSITY.
4. HORN INTENSITY SHALL BE 15DB ABOVE AMBIENT.
5. PULL STATIONS: SINGLE ACTION, ADA COMPLIANT
6. SMOKE DETECTORS: ADJUSTABLE SENSITIVITY, STATUS LEDs
7. HEAT DETECTORS: RATE OF RISE, FIXED TEMP, SPOT TYPE AS REQUIRED, WITH STATUS LEDs
8. DUCT DETECTORS: FULL DUCT WIDTH SAMPLING TUBE, RELAY CONTACT, LOCATE 3FT FROM FAN, BEFORE BRANCHES, LED STATUS INDICATORS, FA MODULE.
9. FACP: MODULAR, ADDRESSABLE, AUTOMATIC FA SYSTEM, REMOTE MONITORING, BATTERY BACKUP SUFFICIENT FOR 24 HOURS OF MONITORING PLUS 5 MIN. OF ALARM,
10. MONITOR AND CONTROL MODULES:ADDRESSABLE, MOUNTED IN 4" DEEP J-BOXES WITH A CUSTOM COVER PLATE WITH APPROPRIATE LABELING AND VIEW PORTS FOR ANY LED INDICATORS.
11. PROVIDE CONDUIT BETWEEN DUCT DETECTORS, FSDs, FLOW SWITCHES, ETC AND MONITOR AND CONTROL MODULES, FMC MAY BE USED FOR SHORT RUNS TO EQUIPMENT OR PIPING, 3FT MAX.
12. PROVIDE 120V POWER AND CPT (WHERE REQUIRED) TO ALL MOTORIZED DAMPERS AND OTHER ANCILLARY EQUIPMENT NOT POWERED FROM THE FIRE ALARM PANEL

ANTHONY DAVID DURAN — NEW MEXICO — 24181 — PROFESSIONAL ENGINEER — 6/28/17

NO.	REVISION DESCRIPTION	DATE	BY
1			
2			
3			
4			
5			

KIRTLAND AIR FORCE BASE BULK FUELS FACILITY
KAFB-106239 CONVEYANCE LINE

SYMBOLS & LEGENDS

SMITH ENGINEERING COMPANY
2201 SAN PEDRO NE BLDG 4, SUITE 200
ALBUQUERQUE, NM 87110
EEA CONSULTING ENGINEERS

JOB NO: 116112
DATE: JUNE 9, 2017
SHEET NO: E-000 21 of 27

COA PROJECT NO: 586082

ELECTRICAL GENERAL CONDITIONS

CODE REQUIREMENTS

1. THE CONTRACTOR SHALL COMPLY WITH ALL APPLICABLE REQUIREMENTS OF LAWS, RULES, REGULATIONS, CODES STANDARDS, AND ORDINANCES OF FEDERAL, STATE, AND LOCAL AUTHORITIES HAVING JURISDICTION, AND ALL EQUIPMENT AND MATERIALS SHALL COMPLY WITH SAID AUTHORITIES WHETHER INDICATED ON THE CONTRACT DOCUMENTS OR NOT.
2. ALL WORK SHALL BE PERFORMED PER:
   - 2.1. 2014 NATIONAL ELECTRICAL CODE – NEC
   - 2.2. NATIONAL FIRE PROTECTION ASSOCIATION – NFPA
3. THE PUBLICATIONS AND STANDARDS OF THE FOLLOWING AUTHORITIES, IN ADDITION TO THOSE SPECIFIED IN RELATED SUPPLEMENTARY CONDITIONS, SHALL BE OBSERVED DURING CONSTRUCTION AND ARE REFERENCED IN THE DOCUMENTATION BY THE ABBREVIATIONS NOTED:
   - 3.1. UNITED STATES OF AMERICA STANDARDS INSTITUTE – USASI
   - 3.2. INSTITUTE OF ELECTRICAL AND ELECTRONIC ENGINEERS – IEEE
   - 3.3. NATIONAL ELECTRICAL CODE – NEC
   - 3.4. NATIONAL FIRE PROTECTION ASSOCIATION – NFPA
   - 3.5. UNDERWRITER'S LABORATORY – UL
   - 3.6. NATIONAL ELECTRICAL MANUFACTURERS ASSOCIATION – NEMA
   - 3.7. CERTIFIED BALLAST MANUFACTURERS – CBM
   - 3.8. AMERICAN SOCIETY FOR TESTING AND MATERIALS – ASTM
   - 3.9. OCCUPATIONAL SAFETY AND HEALTH ACT – OSHA
4. EQUIPMENT AND DEVICES SHALL BE MOUNTED PER ADA AND TAS REQUIREMENTS, UNO.
   - 4.1. OPERABLE DEVICES (SWITCHES, CARD READERS, ETC) AT OR BELOW 48" AFF
   - 4.2. RECEPTACLES, TELEPHONE AND DATA OUTLETS AT 18" AFF (15" MIN TO BOTTOM OF DEVICE), UNO

SCOPE OF WORK

1. THE SCOPE OF WORK SHALL INCLUDE COMPLETE PROVISIONS FOR ELECTRICAL POWER DISTRIBUTION TO ALL LIGHTING, DEVICES, APPLIANCES, AND EQUIPMENT SHOWN ON THE CONSTRUCTION DOCUMENTS.
   - 1.1. PROVISIONS INCLUDE, BUT ARE NOT LIMITED TO, ALL SUPPLIES, MATERIALS, EQUIPMENT, TOOLS AND LABOR.
   - 1.2. PROVISIONS ALSO INCLUDE ALL MISCELLANEOUS MATERIALS REQUIRED TO COMPLETE THE WORK SHOWN INCLUDING, BUT NOT LIMITED TO, SUPPORTS, HANGERS, RACEWAYS, BOXES, SLEEVES, SEALS, EQUIPMENT PADS, WIRING CONNECTORS, TERMINALS, LABELS, SIGNS, AND MARKERS.
   - 1.3. THE CONSTRUCTION DOCUMENTS INCLUDE ALL PLANS, ELEVATIONS, DETAILS, DIAGRAMS, SCHEDULES, AND NOTES ON THE DRAWINGS AND THE WRITTEN SPECIFICATIONS INCLUDING ANY ITEMS MENTIONED IN EITHER THE SPECIFICATIONS OR ON THE DRAWINGS BUT NOT IN THE OTHER.
   - 1.4. WHERE USED ON THE PLANS AND IN THE SPECIFICATIONS AND WHERE NOT SPECIFICALLY NOTED OTHERWISE, THE TERM "PROVIDE" AND THE TERM "INSTALL" SHALL MEAN FURNISH, INSTALL, CONNECT AND TEST.
   - 1.5. UNLESS EXPLICITLY NOTED "BY OTHERS" OR "EXISTING", ALL ITEMS SHOWN GRAPHICALLY OR SPECIFIED BY NOTES AND DETAILS ON THE PLANS SHALL BE FURNISHED, INSTALLED, CONNECTED, AND TESTED AS NEEDED.
2. ADDITIONALLY, THE SCOPE OF WORK SHALL INCLUDE
   - 2.1. APPLICATION FOR TEMPORARY AND PERMANENT ELECTRICAL SERVICE, PERMITTING, INSPECTION, AND PAYMENT OF ALL ASSOCIATED FEES.
   - 2.2. TESTING AND COMMISSIONING OF ELECTRICAL SYSTEMS.
   - 2.3. EQUIPMENT RENTAL.
   - 2.4. TEMPORARY CONSTRUCTION POWER AND LIGHTING.
   - 2.5. PROVISIONS FOR MAINTAINING THE FUNCTIONALITY OF EXISTING TO REMAIN BUILDING COMMUNICATIONS, FIRE ALARM, SECURITY/ACCESS CONTROL, PUBLIC ADDRESS, AND BELL SYSTEMS THAT WILL BE AFFECTED BY THE WORK.

SUBMITTALS

1. PRODUCT DATA: SUBMIT CATALOG DATA SHOWING MANUFACTURER'S NAME AND CONTACT INFORMATION, ALL STANDARD FEATURES, AMPERAGE, VOLTAGE, AIC RATINGS, DIMENSIONS, WEIGHTS, LISTINGS & PRODUCT LABELS, MATERIAL TYPES, FINISHES AND CLEARLY INDICATING WHICH OPTIONAL FEATURES WILL BE PROVIDED.
   - 1.1. WHERE MULTIPLE SIZES ARE LISTED, INDICATE SIZES TO BE USED.
   - 1.2. WHERE MULTIPLE PRODUCTS ARE SHOWN ON THE SAME PAGE, INDICATE WHICH PRODUCTS TO BE USED.
2. SHOP DRAWINGS (WHERE APPLICABLE): MANUFACTURER OR CONTRACTOR PREPARED DRAWINGS SHOWING ALL RELEVANT DIMENSIONS, WEIGHTS, ELECTRICAL & MECHANICAL CONNECTION REQUIREMENTS, CONDUIT ENTRY POINTS, ASSEMBLY REQUIREMENTS, LIFTING REQUIREMENTS, LIFTING POINTS, REQUIRED CLEARANCES. INCLUDE PLAN VIEWS & ELEVATIONS.
   - 2.1. INCLUDE ALL RELEVANT ELECTRICAL DIAGRAMS INCLUDING SCHEMATIC AND INTERCONNECTION DIAGRAMS FOR POWER, SIGNAL, AND CONTROL WIRING.

COORDINATION

1. ALL POWER OUTAGES SHALL BE COORDINATED IN WRITING WITH OWNER ONE (1) WEEK (MIN) PRIOR TO THE OUTAGE.
2. COOPERATE FULLY WITH THE OWNER OR HIS REPRESENTATIVE DURING CONSTRUCTION OPERATIONS TO MINIMIZE CONFLICTS AND TO FACILITATE OWNER USAGE SO AS NOT TO INTERFERE WITH THE OWNER'S OPERATIONS.
3. MAINTAIN REQUIRED NEC WORKING SPACE AND DEDICATED EQUIPMENT SPACE AROUND ALL ELECTRICAL EQUIPMENT, CONTROLS PANELS, ETC THAT ARE SUBJECT TO MAINTENANCE, TESTING, OR USER INTERFACE. COORDINATE WITH OTHER TRADES. IF CLEARANCE CANNOT BE PROVIDED, THE CONTRACTOR SHALL NOTIFY THE ENGINEER PRIOR TO ROUGH-IN.

DELIVERY AND STORAGE

1. STORE ALL ELECTIRCAL/SPECIAL SYSTEMS EQUIPMENT/MATERIALS IN CLEAN, DRY SPACE LOCATED ABOVE GRADE. PROTECT FROM DIRT, WATER, CONSTRUCTION DEBRIS, TRAFFIC, FREEZE, AND DETERIORATION FROM SUN LIGHT.
2. MAINTAIN FACTORY WRAPPING OR PROVIDE APPROPRIATE COVER FOR ALL LARGE ELECTRICAL EQUIPMENT. FOLLOW ALL MANUFACTURER RECOMMENDATIONS FOR HUMIDITY AND MAX/MIN TEMPERATURES FOR STORING ELECTRICAL EQUIPMENT.

ELECTRICAL GENERAL CONDITIONS (CONT.)

QUALIFICATIONS

1. MANUFACTURER: COMPANY SPECIALIZING IN MANUFACTURING PRODUCTS SHOWN ON THE CONSTRUCTION DOCUMENTS WITH MINIMUM THREE YEARS DOCUMENTED EXPERIENCE
2. INSTALLER: A STATE LICENSED ELECTRICIAN WITH DOCUMENTED EXPERIENCE INSTALLING ALL EQUIPMENT SPECIFIED HERE IN SHALL DIRECTLY SUPERVISE ALL WORK. WHERE NOTED IN THE SPECIFICATIONS, REQUIRED BY CODE, OR REQUIRED BY THE MANUFACTURER, INSTALLER SHALL BE A MANUFACTURER TRAINED AND/OR CERTIFIED INSTALLER OF THE SPECIFIC PRODUCT TO BE INSTALLED.
3. WHERE TESTING IS REQUIRED BY THE CONSTRUCTION DOCUMENTS, EQUIPMENT MANUFACTURER, OR CODE; TESTING SHALL BE PERFORMED BY AN AGENCY WITH DOCUMENTED EXPERIENCE AND PROPERLY CALIBRATED, FULLY FUNCTIONING EQUIPMENT, THAT IS A MEMBER OF THE INTERNATIONAL ELECTRICAL TESTING ASSOCIATION, MANUFACTURER CERTIFIED, OR IS A NATIONALLY RECOGNIZED TESTING LABORATORY (NRTL), AND IS ACCEPTABLE TO THE AUTHORITY HAVING JURISDICTION.

QUALITY ASSURANCE

1. UNLESS OTHERWISE APPROVED, ALL EQUIPMENT SHALL BE NEW, PROPERLY DESIGNED, FROM A REPUTABLE MANUFACTURER MEETING THE SPECIFICATION QUALIFICATIONS, IN COMPLIANCE WITH THE SPECIFICATION REQUIREMENTS, AND IN FULL WORKING ORDER.
2. WHERE TWO OR MORE ITEMS OF THE SAME CLASS OF EQUIPMENT ARE REQUIRED, THESE ITEMS SHALL BE PRODUCTS OF A SINGLE MANUFACTURER; HOWEVER, THE COMPONENT PARTS OF THE ITEM NEED NOT BE THE PRODUCTS OF THE SAME MANUFACTURER UNLESS STATED IN THE TECHNICAL SECTION.
3. LISTING AND LABELING: WHERE REQUIRED, ALL ELECTRICAL COMPONENTS, DEVICES, AND ACCESSORIES SHALL BE LISTED AND LABELED AS DEFINED IN NFPA 70, ARTICLE 100, BY A TESTING AGENCY ACCEPTABLE TO AUTHORITIES HAVING JURISDICTION AND MARKED FOR THE INTENDED USE. TESTING AGENCY SHALL BE UL UNLESS NOTED OTHERWISE OR PRE-APPROVED BY OWNER AND AHJ.
4. ALL EQUIPMENT USED FOR TESTING SHALL BE IN FULL WORKING ORDER AND CALIBRATED PER THE MANUFACTURER'S RECOMMENDATIONS.

IDENTIFICATION

1. PROVIDE APPROPRIATE LABELS AND WARNING SIGNS FOR ALL EQUIPMENT, WIRING DEVICES, CONDUCTORS, CABLES, BOX, AND ENCLOSURES. PROVIDE BURIED DETECTABLE WARNING LABEL FOR UNDERGROUND CONDUITS.
2. CONDUCTOR TAGGING: TAG ALL CONDUCTORS AT MOTOR CONTROLS, PANELS, TERMINAL CABINETS AND JUNCTION BOXES. TAG CIRCUITS WHICH PASS THROUGH OTHER DEVICES SUCH AS LIGHTING CONTACTORS.
3. PROVIDE A TYPED PANEL DIRECTORY FOR EACH PANEL PROVIDED OR MODIFIED FOR THIS PROJECT. DIRECTORY SHALL IDENTIFY THE CIRCUIT NUMBER, LOADS SERVED, AND LOCATION OF LOADS BY ROOM NUMBER. MOUNT ON INSIDE OF EACH PANEL AND FILE THEM WITH THE OWNER WHEN THE WORK IS COMPLETED.
4. PROVIDE EACH PANEL WITH A MANUFACTURER PREPARED ARC FLASH HAZARD WARNING LABEL.
5. ALL ELECTRICAL EQUIPMENT SHALL BE IDENTIFIED BY MEANS OF 3"X1" (MIN)NAMEPLATES PERMANENTLY ATTACHED TO THE EQUIPMENT, PLATES SHALL BE METAL, PLASTIC, OR SIMILAR, BLACK WITH 1/4"h (MIN) ENGRAVED WHITE LETTERS.
6. JUNCTION AND PULL BOXES SHALL BE LABELED WITH PANEL NAME, CIRCUIT #, AND VOLTAGE.
7. RECEPTACLES SHALL BE LABELED WITH THE PANEL NAME AND CIRCUIT #. USE WHITE LABELS WITH BLACK TEXT.
8. FIRE ALARM, EMERGENCY/CRITICAL PWR, LIFE SAFETY LABELS, INCLUDING RECEPTACLES, SHALL BE COLOR CODED & ENGRAVED.

LIGHTING

GENERAL REQUIREMENTS

1. IF APPLICABLE, REFER TO ARCHITECTURAL REFLECTED CEILING PLAN FOR EXACT LIGHT FIXTURE LOCATIONS AND QUANTITIES.
2. EXAMINE THE AREA OF INSTALLATION TO VERIFY ADEQUATE SPACE AND MOUNTING PROVISIONS ARE PROVIDED FOR THE SPECIFIED LUMINAIRE PRIOR TO ORDERING LUMINAIRES.
3. VERIFY THAT LUMINAIRES WILL NOT INTERFERE WITH REQUIRED CLEARANCES FOR EQUIPMENT INCLUDING FILTER PULL SPACE, NEC WORKING SPACE IN FRONT OF DISCONNECTS, CONTROL PANELS, ETC.
4. COORDINATE EXIT LIGHT LOCATIONS WITH STRUCTURE AND BUILDING SYSTEMS TO INSURE EXIT SIGNS ARE VISIBLE.
5. PROVIDE GROUND WIRE AND ONE NEUTRAL CONDUCTOR PER CIRCUIT IN ALL LIGHTING CONDUIT.
6. LABEL ALL CIRCUIT BREAKERS SERVING EMERGENCY LIGHTING.
7. UNO, ALL EXIT SIGNS, EMERGENCY EGRESS PATHWAY LIGHT FIXTURES, LIGHTS NOTED "xE", AND LIGHTS SHOWN CROSS HATCHED SHALL BE CONNECTED TO THE SWITCHED AREA LIGHTING CIRCUIT FOR NORMAL OPERATION AND AN UNSWITCHED CIRCUIT FROM THE SAME OCPD TO AUTOMATICALLY CONTROL POWER TRANSFER TO AN INTEGRAL BATTERY PACK FOR 90 MINUTES OF EMERGENCY OPERATION WHEN LOSS OF NORMAL POWER IS SENSED ON THE UNSWITCHED CIRCUIT. PROVIDE A BATTERY STATUS INDICATOR MOUNTED IN A VISIBLE LOCATION.
8. INSTALL FIXTURES PLUMB, SQUARE AND LEVEL WITH CEILINGS AND WALLS AND SECURE FIXTURES PER MANUFACTURER'S PRINTED INSTRUCTIONS.
9. ADJUST AIMABLE FIXTURES, CLEAN, AND PROVIDED ALL FIXTURES WITH LAMPS PRIOR TO OWNER OCCUPANCY.
10. LUMINAIRE WHIPS SHALL BE FLEXIBLE METAL CONDUIT, 6FT MAX. SECURE TO STRUCTURE WITH LISTED SUPPORTS.

LIGHTING CONTROL REQUIREMENTS

1. U.N.O., LIGHTING SWITCHES IN ROOMS SHALL CONTROL ONLY FIXTURES IN THAT ROOM.
2. WHEN MORE THAN ONE(1) LIGHTING SWITCH IS SHOWN AT A LOCATION THEY SHALL BE GANGED TOGETHER.
3. OCCUPANCY SENSOR OFF DELAY SHALL BE SET BY EC AT END OF PROJECT TO 15 MINUTES. AMBIENT LIGHT OVERRIDE SHALL BE SET SUCH THAT THE LUMINAIRES ARE SWITCHED OFF WHEN APPROPRIATE FC LEVEL IS MEASURED ON THE FLOOR (REGARDLESS OF THE FOOTCANDLES MEASURED AT THE OCCUPANCY SENSOR).
4. INSTALL DIMMER SWITCHES ON THE LOAD SIDE OF OCCUPANCY SENSORS AND OTHER CONTROLS.
5. ALL EXTERIOR LIGHTING SHALL BE CONTROLLED AUTOMATICALLY. PROVIDE LIGHTING CONTACTOR TO CONTROL ALL EXTERIOR LIGHTING CIRCUITS BY A SINGLE PHOTOCELL AND/OR ASTRONOMICAL TIME CLOCK WITH HOLIDAY PROGRAMING. PHOTOCELL SHOULD BE ROOF MOUNTED. COORDINATE MOUNTING LOCATION WITH ARCHITECT.
6. ALL LUMINAIRES IN ROOMS WITH BI OR DUAL LEVEL SWITCHING SHALL BE PROVIDED WITH MULTIPLE OR MULTILEVEL BALLASTS AND WIRED TO ALLOW FOR EVENLY REDUCED ILLUMINATION THROUGHOUT THE SPACE. UNO, SWITCH "a" SHALL CONTROL THE OUTER LAMPS IN THE FIXTURES; SWITCH "b" SHALL CONTROL THE INNER LAMPS IN THE FIXTURES.

LUMINAIRES

1. ALL LIGHT FIXTURES/LAMPS SHALL BE UL LISTED AND CONFORM TO ALL APPLICABLE UL, ANSI AND NFPA STANDARDS.
2. REFER TO LUMINAIRE SCHEDULE FOR FIXTURE, BALLAST, AND LAMP SPECIFICATIONS. SUBSTITUTIONS SHOULD BE APPROVED PRIOR TO BID.

CONDUCTORS AND CABLES

GENERAL REQUIREMENTS

1. ALL BUILDING WIRING SHALL BE INSULATED COPPER CONDUCTORS RUN FROM LOAD TO SOURCE INSIDE RACEWAY, CONTINUOUS (WITHOUT SPLICES) BETWEEN JUNCTION AND PULL BOXES, AND EXPOSED INSIDE PANELS ONLY.
2. ALL SINGLE POLE CIRCUITS SHALL HAVE A DEDICATED NEUTRAL CONDUCTOR ROUTED TO THE SOURCE PANEL.
3. FIELD VERIFY WHETHER A NEUTRAL IS REQUIRED FOR ALL TWO AND THREE POLE CIRCUITS. FOR ALL LOADS EXCEPT MOTORS, A NEUTRAL IS ASSUMED TO BE REQUIRED UNLESS FIELD DETERMINED TO BE UNNECESSARY.
4. ALL POWER & CONTROL WIRING ROUTED THROUGH RETURN AIR PLENUMS SHALL BE PLENUM RATED.
5. UP TO 3-20A CIRCUITS MAY SHARE A RACEWAY FOR HOMERUNS WHERE SUITABLE & PER NEC CONDUIT FILL RULES.
6. 120V, 20A. HOME RUNS LONGER THAN 100' AND 277V, 20A. HOME RUNS LONGER THAN 150' SHALL BE #10 MIN.
7. ALL HOME RUNS SHALL BE IN CONDUIT FROM PANEL TO FIRST WIRING DEVICE. MC AND/OR AC CABLE MAY BE USED AFTER FIRST DEVICE ON A CIRCUIT WHERE CONCEALED.
8. ALL WIRING SHALL BE COLOR-CODED AS FOLLOWS:

	208Y/120 VOLT SYSTEM	480Y/277 VOLT SYSTEM
NEUTRAL:	WHITE	GRAY
PHASE A OR L1	BLACK	BROWN
PHASE B OR L2	RED	ORANGE
PHASE C OR L3	BLUE	YELLOW
GROUND	GREEN	GREEN
ISOLATED GROUND	GREEN W/YELLOW TRACER	GREEN W/YELLOW TRACER

BUILDING WIRE

1. CONDUCTOR: SOFT DRAWN COPPER, 98% CONDUCTIVITY.
2. INSULATION RATING: 600V, 90°C
3. INSULATION MATERIAL: THERMOPLASTIC TYPE THHN/THWN U.N.O. USE XHHW WHERE INSTALLED IN UNDERGROUND CONDUIT.
4. CONDUCTORS #8 AWG AND LARGER SHALL BE STRANDED.
5. CONDUCTORS #10 AWG SHALL BE SOLID OR STRANDED. FINAL CONNECTION SHALL BE MADE WITH WIRE TYPE CONSISTENT WITH UL LISTING AND MANUFACTURER REQUIREMENTS FOR EQUIPMENT, FIXTURE, AND/OR DEVICE.
6. CONDUCTORS #12 SHALL BE SOLID.

ARMORED CABLE

1. CONDUCTOR: SOFT DRAWN COPPER, 98% CONDUCTIVITY.
2. INSULATION: 600V, 90°C, THHN/THWN U.N.O.
3. ARMOR: STEEL OR ALUMINUM; INTERLOCKED METAL TAPE.

METAL CLAD CABLE

1. CONDUCTOR: SOFT DRAWN COPPER, 98% CONDUCTIVITY.
2. INSULATION: 600V, 90°C, THHN/THWN U.N.O.
3. ARMOR: STEEL OR ALUMINUM; INTERLOCKED METAL TAPE.

CONNECTORS AND TERMINATIONS

1. PROVIDE FACTORY-FABRICATED, METAL CONNECTOR OF THE SIZE, RATING, MATERIAL, TYPE AND CLASS REQUIRED BY EQUIPMENT MANUFACTURER AND THE NEC.
2. CONNECTORS SHALL BE INSULATED TO 600V AND CONDUCTING COMPONENTS SHALL MATCH MATERIAL OF WIRING (COPPER U.N.O.)
3. TERMINAL LUGS FOR WIRES #6 AWG AND SMALLER SHALL BE SOLDERLESS, COMPRESSION TYPE COPPER.
4. TERMINAL LUGS FOR #4 AWG AND LARGER SHALL BE COMPRESSION TYPE COPPER WITH INSULATING SEALING COLLARS.

GROUNDING AND BONDING

GENERAL REQUIREMENTS

1. ALL RACEWAYS AND CIRCUITS SHALL BE PROVIDED WITH A NEC 250 COMPLIANT GREEN GROUND CONDUCTOR.
2. ALL EQUIPMENT SHALL BE PROPERLY BONDED.
3. UPON COMPLETION OF THE WORK, ALL PARTS OF THE ELECTRICAL INSTALLATION SHALL BE MEGGER TESTED AND PROVED TO BE FREE OF UNWANTED GROUNDS AND OTHER DEFECTS.
4. INSTALL BRANCH CIRCUITS FEEDING ISOLATED GROUND RECEPTACLES WITH SEPARATE INSULATED GROUNDING CONDUCTOR, CONNECTED ONLY AT ISOLATED GROUND RECEPTACLE, GROUND TERMINALS, AND GROUND BUS OF SERVING PANEL.

PRODUCTS

1. ROD ELECTRODES: 10 FOOT, 3/4" DIAMETER, COPPER. EXOTHERMIC WELDED CONNECTION.
2. GROUNDING AND BONDING WIRE: 600V, STRANDED COPPER; SOLID COPPER MAY BE USED FOR #8 AWG AND SMALLER. MATCH BUILDING WIRE INSULATION EXCEPT WHERE NOTED AS BARE.
3. MECHANICAL CONNECTORS: BRONZE CONNECTORS, SUITABLE FOR GROUNDING AND BONDING APPLICATIONS. LISTED AND LABELED BY A NATIONALLY RECOGNIZED TESTING LABORATORY ACCEPTABLE TO THE A.H.J.
4. GROUND BUS: RECTANGULAR ANNEALED COPPER, MIN. 12" LONG, 1/4" BY 2" IN CROSS SECTION U.N.O.

SERVICE ENTRANCE GROUNDING ELECTRODE SYSTEM

1. ALL RACEWAYS AND CIRCUITS SHALL BE PROVIDED WITH A NEC 250 COMPLIANT GREEN GROUND CONDUCTOR.
2. AT A MINIMUM, A GROUNDING ELECTRODE CONDUCTOR, SIZED PER NEC ARTICLE 250, SHALL BE CONNECTED FROM THE GROUND BUS OF THE SERVICE ENTRANCE DISCONNECT TO A 3/4"x10' COPPER CLAD STEEL GROUND ROD, TO THE BUILDING METAL COLD WATER AND GAS PIPING AT THE POINT OF ENTRANCE INTO THE BUILDING, STRUCTURAL STEEL, AND 20' OF BARE COPPER ENCASED IN THE SLAB. ADDITIONAL GROUNDING REQUIREMENTS MAY BE SPECIFIED ON THE PLANS.
3. ROUTING OF GROUNDING ELECTRODE CONDUCTORS SHALL BE IN METAL CONDUIT IN ALL LOCATIONS THAT ARE SUBJECT TO PHYSICAL ABUSE OR ENVIRONMENTAL DETERIORATION SUCH AS EXTERIOR MOUNTED, EXPOSED BELOW LAY IN CEILING, ETC.
4. PROVIDE A #4 GROUND FROM THE SERVICE ENTRANCE GROUND BUS TO ALL TELEPHONE SERVICE BOARDS AND COMMUNICATIONS EQUIPMENT ROOMS AND TERMINATE AT A GROUND BUS.
5. GROUNDING SYSTEM RESISTANCE SHALL BE 5 OHMS MAXIMUM. SYSTEM SHALL BE TESTED IN ACCORDANCE WITH IEEE 142. PROVIDE ADDITIONAL GROUNDING ELECTRODES AS REQUIRED TO ACHIEVE RESISTANCE.

RACEWAYS AND BOXES

GENERAL REQUIREMENTS

1. PROVIDE RACEWAY AND BOXES AS SPECIFIED BELOW FOR POWER, LIGHTING, COMMUNICATIONS, FIRE ALARM, ACCESS CONTROL/SECURITY, CONTROLS, AND OTHER SPECIAL SYSTEMS.
2. PROVIDE RACEWAY AND BOXES FOR ALL EQUIPMENT; LIGHTING; WIRING DEVICES; COMMUNICATIONS EQUIPMENT AND OUTLETS; FIRE ALARM EQUIPMENT, APPLIANCES, AND DEVICES; ACCESS CONTROL/SECURITY POINTS; CONTROLS POINTS; AND OTHER SPECIAL SYSTEMS SHOWN ON PLANS.
3. PROVIDE RACEWAY BOXES AT OTHER LOCATIONS AS REQUIRED FOR SPLICES, TAPS, WIRE PULLING, EQUIPMENT CONNECTIONS, AND COMPLIANCE WITH REGULATORY REQUIREMENTS. RACEWAY AND BOXES ARE SHOWN IN APPROXIMATE LOCATIONS UNLESS DIMENSIONED. PROVIDE RACEWAY TO COMPLETE WIRING SYSTEM.

CONDUIT

1. CONTRACTOR SHALL FURNISH AND INSTALL ALL CONDUITS SERVING ALL EQUIPMENT, INCLUDING BUT NOT LIMITED TO, LIGHTING, RECEPTACLES, HEATING, AIR CONDITIONING, PLUMBING EQUIPMENT, TELEPHONE, DATA, SPEAKERS, AND ELECTRICAL EQUIPMENT.
2. ABOVE GRADE CONDUITS SHALL BE GALVANIZED RMC, IMC OR EMT UNLESS OTHERWISE SPECIFIED IN SPECIFICATIONS OR ON DRAWINGS. ALL CONDUIT IS TO BE UL LABELED. EMT CONNECTORS SHALL BE STEEL COMPRESSION OR SET SCREW TYPE.
3. UNDER GROUND/SLAB CONDUIT SHALL BE RIGID STEEL, OR SCHEDULE 40 PVC. PROVIDE WRAPPED RMC WHERE ENTERING/EXITING SLABS OR GRADE, AND FOR ELBOWS 1" AND LARGER.
4. MINIMUM SIZE OF CONDUIT SHALL BE 3/4" AND 1" FOR ALL UNDER GROUND CONDUIT.
5. CONDUIT SHALL BE CONCEALED EXCEPT FOR UNFINISHED AREAS, SUCH AS EQUIPMENT ROOMS. EXPOSED CONDUIT SHALL BE ALLOWED ONLY AS NOTED ON PLAN AND AS APPROVED BY THE G.C.'S CONSTRUCTION MANAGER. PAINTING OF CONDUITS, NOTED ON DRAWINGS OR SPECIFICATIONS WILL BE BY THE G.C.
6. WHERE EXPOSED, CONDUIT SHALL BE RMC OR IMC BELOW 10', AND RMC, IMC, OR EMT ABOVE 10'. PROVIDE RMC IN ALL LOCATIONS WHERE SUBJECT TO PHYSICAL DAMAGE.
7. SUPPORT ALL CONDUIT, INCLUDING SEISMIC AND SWAY BRACING, IN ACCORDANCE WITH THE NEC AND LOCAL CODES.
8. ALL CONDUITS MUST BE SIZED PER NEC AND LOCAL CODES.

OUTLET BOXES

1. ALL OUTLET BOXES SHALL BE GALVANIZED PRESSED STEEL OF THE STANDARD KNOCKOUT TYPE. NO ROUND OUTLET BOXES SHALL BE PERMITTED, EXCEPT AS SPECIFICALLY NOTED ON DRAWINGS. CONCEALED BOXES SHALL NOT BE LESS THAN 4" SQUARE AND 1-1/2" DEEP, WITH PLASTER RINGS.
2. ALL KNOCKOUT BOXES, UPON WHICH LIGHTING FIXTURES ARE TO BE INSTALLED, SHALL BE EQUIPPED WITH 3/8" FIXTURE STUDS.
3. EXTERIOR BOXES SHALL BE CAST RUST-RESISTING METAL WITH GASKETED COVERS.
4. INSTALL BOXES RIGIDLY FROM BUILDING STRUCTURE AND SUPPORT INDEPENDENTLY OF THE CONDUIT SYSTEM. ALSO PROVIDE SUITABLE BOX EXTENSIONS TO EXTEND BOXES TO FINISHED FACES OF FLOORS, CEILINGS, WALLS, ETC. ALL OUTLET BOXES SHALL BE PROVIDED WITH CADDY "QUICK-MOUNT BOX SUPPORT" TO MINIMIZE THE DEFLECTION THAT OCCURS WHEN PLUGGING/UNPLUGGING INTO THESE DEVICES.
5. USE CONCRETE TIGHT, MASONRY RATED BOXES AND FITTINGS WHERE INSTALLED IN CONCRETE, STONE, BRICK, OR CMU.
6. EXTERIOR OUTLET BOXES SHALL BE CAST METAL, GASKETED, AND RATED NEMA 3R MIN.

JUNCTION AND PULL BOXES

1. THE PLANS INDICATE ONLY SCHEMATIC ROUTINGS FOR CONDUIT RUNS. CONTRACTOR SHALL FURNISH AND INSTALL ADDITIONAL BOXES WHERE REQUIRED BY FIELD CONDITIONS OR BY CODE.
2. BOXES AND COVERS SHALL BE GALVANIZED STEEL OF CODE GAUGE SIZE.
3. INSTALL BOXES RIGIDLY SUPPORTED FROM THE BUILDING STRUCTURE AND SUPPORTED INDEPENDENT OF THE CONDUIT SYSTEM.
4. ARRANGE CIRCUITS TO AVOID THE USE OF JUNCTION BOXES IN INACCESSIBLE LOCATIONS. THE USE OF JUNCTION BOXES ABOVE DRYWALL CEILINGS SHOULD BE IN LOCATIONS NEAR ACCESS FRAMES USED FOR DIFFUSERS AND RETURN AIR GRILLES OR ACCESS PANELS AS LOCATED ON PLANS.
5. JUNCTION AND PULL BOXES MUST BE LABELED WITH CIRCUIT NUMBER IDENTIFICATION AND SYSTEM TYPE ON COVER.
6. PROVIDE BOXES FOR UTILITY SERVICE CONDUIT(S) OR CABLING PER UTILITY PROVIDER'S SPECIFICATIONS.
7. NONMETALLIC HANDHOLES MAY BE USED FOR SITE LIGHTING AND CONTROLS CIRCUITS.
8. USE CONCRETE TIGHT, MASONRY RATED BOXES AND FITTINGS WHERE INSTALLED IN CONCRETE, STONE, BRICK, OR CMU.
9. EXTERIOR BOXES SHALL BE CAST METAL, GASKETED, AND RATED NEMA 3R MIN.

WIRING DEVICES

GENERAL REQUIREMENTS

1. WIRING DEVICE COLOR SHALL MATCH THE CEILING/WALL FINISH COLOR SELECTED BY ARCHITECT, UNLESS OTHERWISE INDICATED. ALL ISOLATED GROUND (I.G) TYPE RECEPTACLES SHALL BE ORANGE UNLESS OTHERWISE NOTED.
2. RECEPTACLES REQUIRING AMPERAGES, VOLTAGES OR CONFIGURATIONS DIFFERENT FROM THE DUPLEX CONVENIENCE RECEPTACLES ABOVE SHALL BE AS INDICATED ON THE DRAWINGS.
3. PROVIDE OTHER RECEPTACLES OF A QUALITY, MATERIAL AND WORKMANSHIP EQUAL TO THAT SPECIFIED FOR DUPLEX CONVENIENCE RECEPTACLES.
4. LOCATE THE SWITCHES APPROXIMATELY 4'-0" ABOVE THE FINISHED FLOOR ELEVATION OR NEAREST BLOCK COURSE (WITHIN A.D.A. REQUIREMENTS), U.N.O. THE LONG DIMENSION OF THE SWITCHES SHALL BE VERTICAL.
5. LOCATE RECEPTACLES APPROXIMATELY 1'-6" ABOVE THE FINISHED FLOOR ELEVATION OR NEAREST BLOCK COURSE (WITHIN A.D.A. REQUIREMENTS), U.N.O. THE LONG DIMENSION OF RECEPTACLES SHALL BE VERTICAL.

PRODUCTS

1. PROVIDE TOTALLY ENCLOSED, 20 AMPERE, 120/277 VOLT, QUIET A/C GENERAL USE SNAP SWITCHES.
2. SWITCHES SHALL BE SPECIFICATION GRADE AS MANUFACTURED BY HUBBEL, P&S, OR LEVITON.
3. PROVIDE NEMA CONFIGURATION 5-20R DUPLEX 125 VOLT GROUNDING TYPE RECEPTACLES RATED FOR 20 AMPERES UNLESS OTHERWISE INDICATED ON THE DRAWINGS.
4. RECEPTACLES SHALL BE SPECIFICATION GRADE AS MANUFACTURED BY HUBBELL, P&S OR LEVITON.
5. PROVIDE COVER OR DEVICE PLATES FOR OUTLET BOXES AS FOLLOWS UNLESS OTHERWISE NOTED:
   - 5.1. FINISHED AREAS: THERMOPLASTIC – COLOR TO MATCH DEVICE.
   - 5.2. UNFINISHED AREAS: ZINC COATED SHEET METAL, ALUMINUM, OR CAST METAL AS APPROPRIATE FOR THE TYPE OF BOX.
   - 5.3. EXTERIOR AREAS: COPPER FREE ALUMINUM WITH GRAY, POWDER EPOXY FINISH, GASKET, WEATHERPROOF, CROUSE-HINDS "WLRD" FOR DUPLEX RECEPTACLES AND WLRS FOR SINGLE RECEPTACLES OR EQUAL.
   - 5.4. TELEPHONE, COMMUNICATION, AND SIGNAL OUTLET PLATES, SHALL MATCH THOSE USED FOR RECEPTACLES AND SWITCHES. ALL OUTLET AND/OR JUNCTION BOXES SHALL BE COMPLETE WITH A COVER PLATE BY THIS CONTRACTOR.
   - 5.5. WHERE DEVICES ARE GANGED, THEY SHALL BE INSTALLED UNDER A COMMON COVERPLATE.

EQUIPMENT

TRANSFORMERS

1. TRANSFORMERS SHALL BE CONTINUOUSLY RATED ISOLATING TYPE FOR 60 HERTZ SERVICE UNLESS OTHERWISE INDICATED.
2. INSULATION SYSTEMS SHALL BE 220 DEGREES C (150 DEGREES RISE).
3. ENCLOSURES FOR TRANSFORMERS SHALL BE METALLIC, SUITABLE FOR INDOOR AND OUTDOOR INSTALLATION AS APPLICABLE AND RODENT PROOF.
4. MANUFACTURERS SHALL BE SQUARE D, CUTLER HAMMER, SEIMENS, POWERSMITHS, PQI, OR G.E.. FRACTIONAL KVA TRANSFORMERS SHALL BE MANUFACTURED BY EDWARDS OR THE SPECIAL EQUIPMENT MANUFACTURER IN WHICH THE TRANSFORMERS ARE USED.
5. FOUR APPROVED VIBRATION DAMPENERS PER TRANSFORMER SHALL BE EMPLOYED AS NECESSARY TO AVOID TRANSMITTING ANY VIBRATION TO THE BUILDING STRUCTURE. SIZES OF THE MOUNTINGS SHALL BE SELECTED ON THE BASIS OF THE WEIGHT OF THE TRANSFORMER, USING:
   - A. A MINIMUM 1" THICK RUBBER-CORK-RUBBER SANDWICH TYPE FOR FLOOR MOUNTING.
   - B. A SPRING TYPE FOR SUSPENSION MOUNTING.
   - C. TWO(2) SPRING TYPE AT THE TOP (WITH TWO (2) STEEL BRACKETS) AND TWO (2) RUBBER-IN COMPRESSION TYPE AT THE BOTTOM (STAND-OFF) FOR WALL MOUNTING.
6. NO CONDUITS SHALL BE ATTACHED DIRECTLY TO THE TRANSFORMER. AT EACH ATTACHMENT, PROVIDE A VIBRATION DAMPENING ASSEMBLY CONSISTING OF:
   - A. AT&B #5721, 2, 3 ETC., OR EQUIVALENT FEMALE HUB TYPE LIQUID-TIGHT CONNECTOR BY STEEL CITY, EFCOR OR APPROVED EQUAL.
   - B. T&B #5331, 2, 3 ETC., OR EQUIVALENT MALE HUB TYPE LIQUID-TIGHT CONNECTOR WITH AN INSULATED THROAT BY STEEL CITY, EFCOR OR APPROVED EQUAL.
   - C. SHORT LENGTH (24" PLUS OR MINUS) OF LIQUID-TIGHT FLEXIBLE CONDUIT.
   - D. A BONDING JUMPER OF NEC SIZE OUTSIDE OF THE ASSEMBLY.
7. FLOOR MOUNTING: ALL FLOOR MOUNTED TRANSFORMERS SHALL BE INSTALLED ON A 4" HIGH CONCRETE PAD. THIS CONTRACTOR SHALL FURNISH AND INSTALL CONCRETE PAD.

PANELBOARDS

1. ACCEPTABLE MANUFACTURERS: SQUARE D, EATON, SEIMENS, G.E.. PANELBOARDS SHALL BE ENCLOSED DEAD FRONT SAFETY TYPE WITH FEATURES AND RATINGS AS SCHEDULED ON THE DRAWINGS.
2. PANELS KNOWN AS "LOAD CENTERS" ARE UNACCEPTABLE.
3. MOLDED CASE CIRCUIT BREAKERS SHALL BE AS SCHEDULED ON THE DRAWINGS AND SPECIFIED IN THIS DIVISION.
4. ALL BUS BARS SHALL BE RECTANGULAR, SOLID COPPER.
5. SPACE, WHERE SHOWN IN PANEL SCHEDULES, DESIGNATES SPACE FOR FUTURE PROTECTIVE DEVICES AND SHALL INCLUDE BUS AND SUPPORT.
6. INSTALL CABINETS SO THAT CENTER OF THE TOP BREAKER DOES NOT EXCEED 6'-6" ABOVE THE FINISHED FLOOR.
7. ENTRIES ON DIRECTORY CARDS SHALL BE TYPED, COMPLETE AND ACCURATE.
8. ALL BOLTED CONNECTIONS SHALL BE TORQUED IN ACCORDANCE WITH MANUFACTURER'S STANDARDS.
9. ELECTRICAL CONTRACTOR SHALL ARRANGE CIRCUITS AS NEAR AS POSSIBLE TO CIRCUIT NUMBERS ON THE DRAWINGS. AT COMPLETION OF JOB, ELECTRICAL CONTRACTOR SHALL TAKE CURRENT READING CHECKS OF RESPECTIVE PHASES. A MINIMUM OF CIRCUIT CONNECTIONS SHALL BE REARRANGED TO BALANCE AS CLOSELY AS POSSIBLE, THE LOAD IN THE PANEL.
10. ALL BREAKERS SHALL BE BOLT-ON TYPE.
11. PROVIDE (3) SPARE 1" CONDUITS INTO ACCESSIBLE CEILING SPACE WHERE PANELS ARE FLUSH-MOUNTED.

SAFETY SWITCHES

1. SAFETY SWITCHES SHALL BE THE ENCLOSED HEAVY-DUTY TYPE (TYPE HD) WITH QUICK-MAKE, QUICK-BREAK MECHANISM AND EXTERNAL PAD LOCKABLE OPERATING HANDLE.
2. SAFETY SWITCHES SHALL BE RATED FOR 240 OR 600 VOLTS AS APPLICABLE. THEY SHALL BE HORSEPOWER RATED WHEN USED IN MOTOR CIRCUITS.
3. SAFETY SWITCHES SHALL BE FUSIBLE OR NON-FUSIBLE 2, 3, OR 4 POLE AS INDICATED ON THE DRAWINGS.
4. SAFETY SWITCHES SHALL BE SINGLE THROW UNLESS OTHERWISE INDICATED ON THE DRAWINGS.
5. ENCLOSURES SHALL BE NEMA 1 INDOORS AND NEMA 3R OUTDOORS UNLESS OTHERWISE INDICATED ON THE DRAWINGS.
6. MANUFACTURER SHALL BE SQUARE D, SIEMENS, G.E., OR EATON. ALL SAFETY SWITCHES SHALL BE BY ONE MANUFACTURER.

MOTOR STARTERS

1. PROVIDE MOTOR STARTERS (FUSED OR NON-FUSED COMBINATION TYPE AS INDICATED ON DRAWINGS) AND CONTROL DEVICES REQUIRED FOR THIS PROJECT. STARTERS SHALL BE PROVIDED WITH CONTROL COILS, OVERLOADS, CONTROL TRANSFORMER WITH FUSED SECONDARY CONTROL CIRCUIT, (2) N.O. AND (2) N.C. AUXILIARY CONTACTS, HAND-OFF-AUTO SELECTOR SWITCH AND RUNNING PILOT LIGHT, UNLESS OTHERWISE NOTED. PROVIDE AND INSTALL INTERLOCK WIRING CONTROL DEVICES. ALL FUSES SHALL BE DUAL ELEMENT TYPE. PROVIDE "BLOWNFUSE" INDICATOR LAMPS IN COVER.
2. STARTERS SHALL BE SQUARE D, G.E., EATON, OR SIEMENS.
3. THE ELECTRICAL CONTRACTOR SHALL VERIFY THE EXACT NUMBER OF NORMALLY OPEN AND NORMALLY CLOSE AUXILIARY CONTACTS AND CONTROL VOLTAGE REQUIREMENTS FOR EACH STARTER WITH THE TEMPERATURE CONTROL CONTRACTOR PRIOR TO ORDERING STARTERS.
4. REFER TO MECHANICAL CONSTRUCTION DOCUMENTS FOR ELECTRICAL CHARACTERISTICS OF EQUIPMENT. STARTERS SHALL BE REQUIRED FOR ALL MOTORS, UNLESS SPECIFICALLY NOTED ON THE MECHANICAL CONSTRUCTION DOCUMENTS AS BEING FURNISHED INTEGRAL TO THE EQUIPMENT.

FUSES

1. THE CONTRACTOR SHALL FURNISH A COMPLETE SET OF FUSES FOR ALL SWITCHES, PLUS FUSIBLE EQUIPMENT FURNISHED BY OTHER TRADES. UNLESS INDICATED OTHERWISE ON PLANS, THE FUSES SHALL BE OF THE FOLLOWING TYPES:
   - A. FUSES 601 TO 6000 AMPS SHALL BE UL CLASS. TRADE TYPE SHALL BE KRP-C AS MANUFACTURED BY THE BUSSMANN COMPANY.
   - B. FUSES 1/10 TO 600 AMPS SHALL BE UL CLASS RK1. TRADE TYPE SHALL BE LOW PEAK LPS-RK (600V) AND LPN-RK (250V) AS MANUFACTURED BY THE BUSSMANN COMPANY.
   - C. ALL OTHER FUSES SHALL BE DUAL-ELEMENT CURRENT-LIMITING TYPE WITH 200,000 AMPERES SYMMETRICAL INTERRUPTING CAPACITY.
2. FUSES SHALL BE MANUFACTURED BY BUSSMANN, GOULD-SHAWMUTT, OR RELIANCE.
3. SPARE FUSES AMOUNTING TO A DUPLICATE SET OF EACH SIZE INSTALLED SHALL BE TURNED OVER TO THE OWNER UPON COMPLETION OF THE PROJECT. PROVIDE AND PLACE IN A SPARE FUSE CABINET SIMILAR TO BUSSMANN # SFC.
4. THIS CONTRACTOR SHALL REPLACE ALL FUSES BLOWN DURING CONSTRUCTION.

SPECIAL SYSTEMS

GENERAL REQUIREMENTS

1. SPECIAL SYSTEMS INCLUDE, BUT ARE NOT LIMITED TO, TELECOMMUNICATIONS, FIRE ALARM, AUDIO/VIDEO, ACCESS CONTROL SYSTEMS.
2. FOR SPECIAL SYSTEMS EQUIPMENT AND DEVICES SHOWN ON THE CONSTRUCTION DOCUMENTS, OR EQUIPMENT AND DEVICES THAT CAN BE REASONABLY IMPLIED AS REQUIRED TO OPERATE ITEMS SHOWN, ELECTRICAL CONTRACTOR SHALL BE RESPONSIBLE FOR POWER, RACEWAY/BOX/ENCLOSURES ROUGH-IN, AND INFRASTRUCTURE PROVISION EVEN IF SAID SPECIAL SYSTEMS ARE PROVIDED BY A SPECIALIST CONTRACTOR, OWNER'S AGENT, OR UNDER SEPARATE CONTRACT.
3. TELECOMMUNICATIONS: IT CABLING, JACKS, EQUIPMENT RACKS, NETWORKING EQUIPMENT, AND PATCH PANELS WILL BE PROVIDED AND INSTALLED BY TELECOM CONTRACTOR. ALL OTHER WORK BY ELEC. CONTRACTOR
4. POWER LIMITED AND NON POWER LIMITED CABLE SHALL NOT SHARE COMMON RACEWAYS OR ENTER JUNCTION BOXES THROUGH THE SAME OPENING.

COA PROJECT NO: 586082

ANTHONY DAVID DURAN
NEW MEXICO
24181
PROFESSIONAL ENGINEER
6/28/17

NO.	REVISION DESCRIPTION	DATE	BY
5			
4			
3			
2			
1			

KIRTLAND AIR FORCE BASE BULK FUELS FACILITY
KAFB-106239 CONVEYANCE LINE

GENERAL NOTES & SPECIFICATIONS

SMITH ENGINEERING COMPANY
2201 SAN PEDRO NE BLDG 4, SUITE 200
ALBUQUERQUE, NM 87110

EEA CONSULTING ENGINEERS

JOB NO: 116112
DATE: JUNE 9, 2017
SHEET: E-001 NO: 22 of 27

GENERAL NOTES:

A. SEE DRAWING E-000 FOR SYMBOLS & LEGENDS.

B. SEE DRAWING E-001 FOR GENERAL NOTES AND SPECIFICATIONS.

KEYED NOTES:

1. PROVIDE 2" CONDUIT FOR FIBER RUN INSIDE THE GROUNDWATER TREATMENT BUILDING. ROUTE OVERHEAD FROM NW CORNER TO CP-101 IN THE SOUTHEAST CORNER ELECTRICAL ROOM.
2. SEE SHEET C-402 FOR DETAIL
3. PROVIDE PULL BOXES FOR FIBER OPTICS AND MEDIUM-VOLTAGE FEEDER TO MEET CODE REQUIREMENTS.

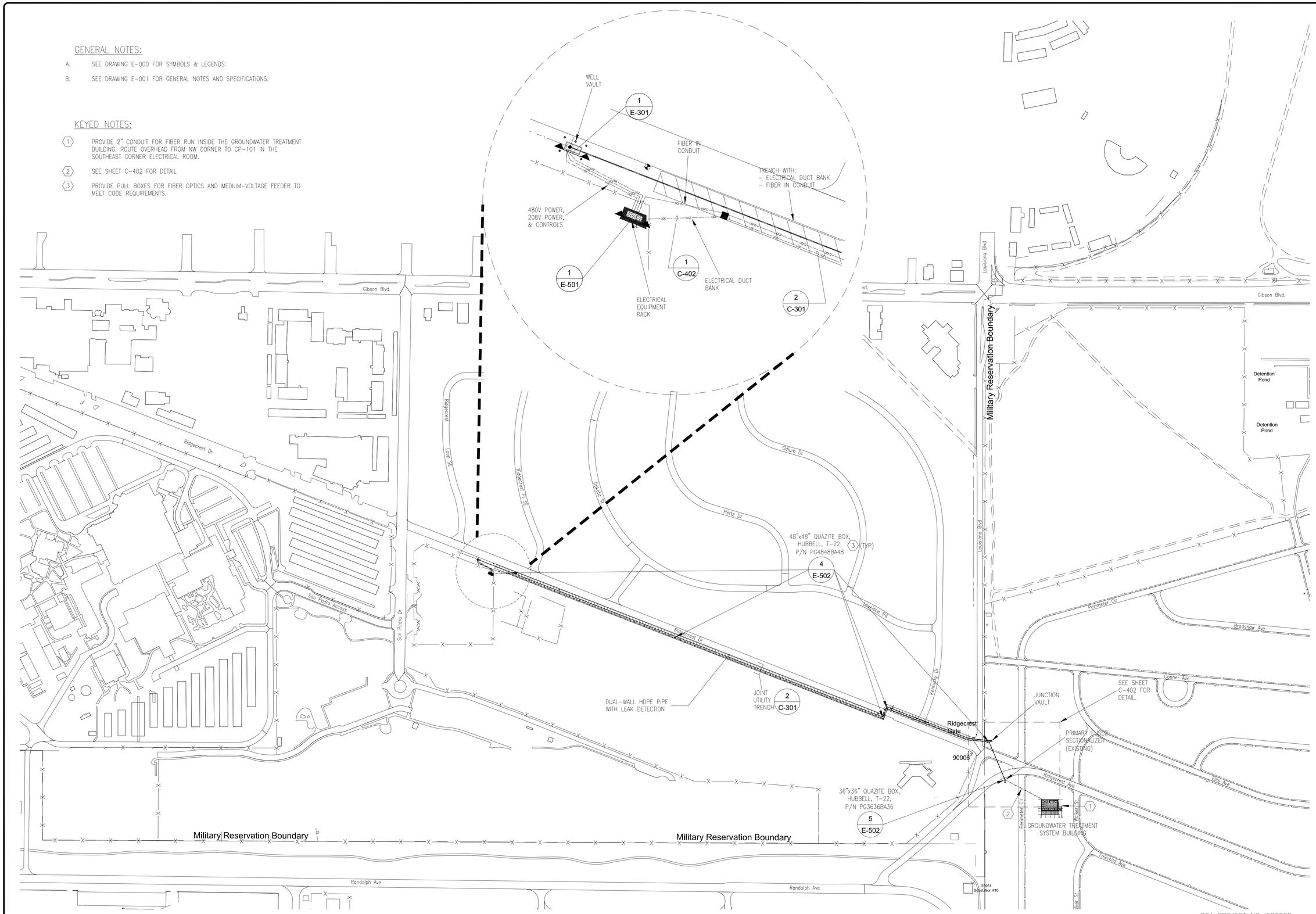

COA PROJECT NO: 586082

ANTHONY DAVID DURAN
NEW MEXICO
24181
PROFESSIONAL ENGINEER
7/6/17

NO.	REVISION DESCRIPTION	DATE	BY
5			
4			
3			
2			
1			

KIRTLAND AIR FORCE BASE BULK FUELS FACILITY
KAFB-106239 CONVEYANCE LINE

ELECTRICAL PLAN

SMITH ENGINEERING COMPANY
2201 SAN PEDRO NE BLDG 4, SUITE 200
ALBUQUERQUE, NM 87110
EEA CONSULTING ENGINEERS

JOB NO: 116112
DATE: JUNE 9, 2017
SHEET NO: E-201 23 of 27

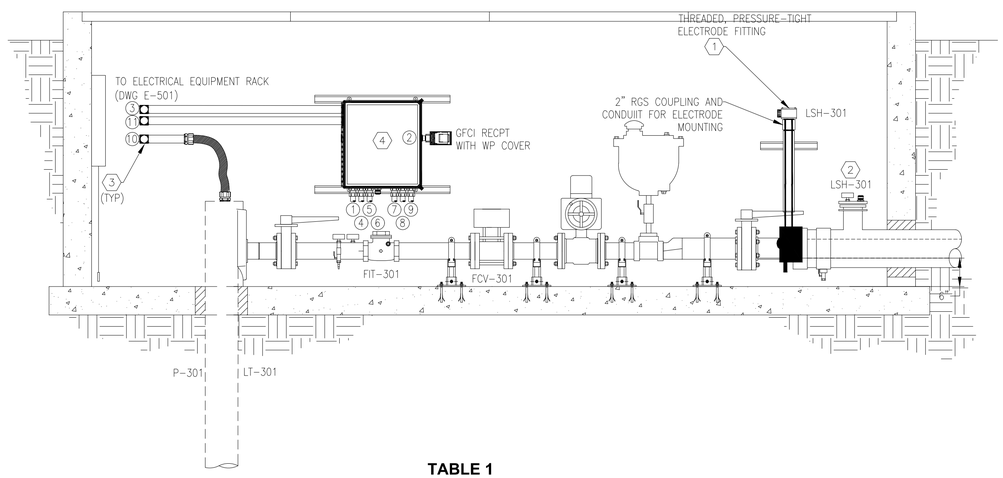

TABLE 1

CONDUIT AND CIRCUIT ASSIGNMENT

1	3/4" FLEX *	2-1/C #12AWG, 1#12G	FIT-301 CONTROL POWER	7	3/4" FLEX *	1-TWSP #16AWG	LT-301 ANALOG SIGNAL
2	3/4" RGS	2-1/C #12AWG, 1#12G	GFCI RECEPTACLE	8	3/4" FLEX *	1-TWSP #16AWG	FIT-301 ANALOG SIGNAL
3	1 1/4" RGS	14-1/C #14AWG	WELL VAULT TB (CONTROLS)	9	3/4" FLEX *	1-TWSP #16AWG	FCV-301 ANALOG SIGNAL
4	3/4" FLEX *	2-1/C #12AWG, 1#12G	FCV-301 CONTROL POWER	10	1-1/4" RGS/FLEX *	3#4AWG, 1#8G	PUMP P-301
5	3/4" FLEX *	2-1/C #14AWG	LSH-301 PROBES	11	1-1/4" RGS	6-1/C #12AWG, 1-1/C #12G	WELL VAULT TB (POWER)
6	3/4" CGB FITTING	1-2/C #14AWG	LSH-301 PROBE WIRES				

* ALL FLEX SHALL BE LIQUIDTIGHT FLEXIBLE METAL CONDUIT

1 WELL VAULT SECTION
3/4" = 1'-0"

GENERAL NOTES:

A. SEE DRAWING E-000 FOR SYMBOLS & LEGENDS.

B. SEE DRAWING E-001 FOR GENERAL NOTES AND SPECIFICATIONS.

KEYED NOTES:

1. INSTALL A WARRICK ELECTRODE FITTING CATALOG NUMBER 3E2A WITH TWO PROBES CATALOG NUMBER 3R2C4. GROUND REFERENCE PROBE TO BE OF ANY GREATER LENGTH THAN THE HIGH PROBE. HIGH PROBE TO BE SET 6 INCHES FROM THE VAULT FLOOR.
2. INSTALL TWO WARRICK WIRE SUSPENDED PROBES CATALOG NUMBER 3W2 IN LEAK DETECTION INSPECTION PORT. SECURE PROBES UTILIZING A CROUSE-HINDES CATALOG NUMBER CGB393 FOR A 1 INCH NPT THREAD IN THE PORT FLANGE PROVIDED AND ONE AT THE VAULT TERMINAL BOX. TWO CONDUCTOR #14AWG CABLE TO BE FREE AIR IN VAULT FOR EASE OF ACCESS TO INSPECTION PORT. PRIOR TO ORDERING THE CGB FITTING VERIFY THE CABLE OUTSIDE DIAMETER FOR PROPER SIZING OF GLAND TYPE.
3. PROVIDE MOISTURE SEALS FOR ALL CONDUIT PENETRATIONS INTO WELL AND VALVE VAULTS.
4. ENCLOSURE TO CONTAIN MODULAR, DIN RAIL MOUNTED TERMINAL BLOCKS FOR TERMINATING ALL CONDUCTORS FROM THE WELL VAULT EQUIPMENT RACK.

ANTHONY DAVID DURAN
NEW MEXICO
24781
PROFESSIONAL ENGINEER
6/28/17

NO.	REVISION DESCRIPTION	DATE	BY
5			
4			
3			
2			
1			

KIRTLAND AIR FORCE BASE BULK FUELS FACILITY
KAFB-106239 CONVEYANCE LINE

WELL VAULT SECTION

SMITH ENGINEERING COMPANY
2201 SAN PEDRO NE BLDG 4, SUITE 200
ALBUQUERQUE, NM 87110
EEA CONSULTING ENGINEERS

JOB NO: 116112
DATE: JUNE 9, 2017
SHEET NO: E-301 24 of 27

COA PROJECT NO: 586082

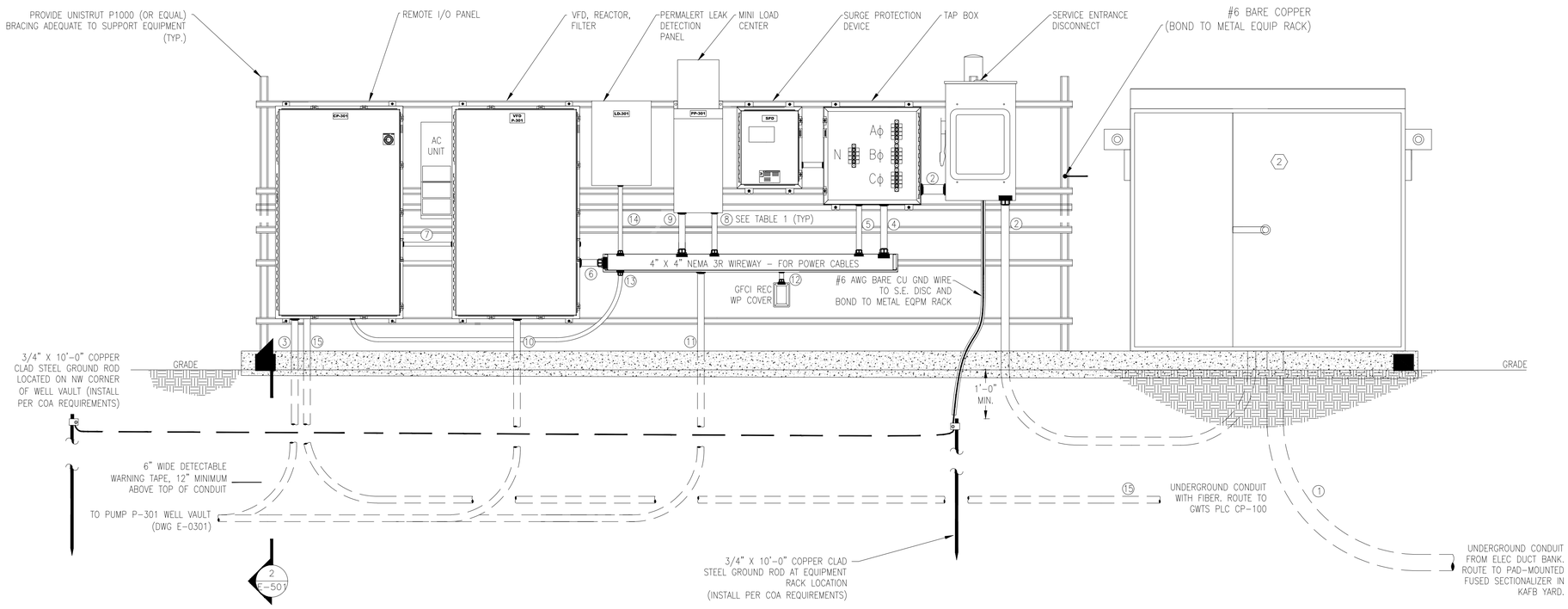

GENERAL NOTES:

A. SEE DRAWING E-000 FOR SYMBOLS & LEGENDS.

B. SEE DRAWING E-001 FOR GENERAL NOTES AND SPECIFICATIONS.

C. FENCING NOT SHOWN. SEE CIVIL, DRAWING C-401 FOR DETAILS.

D. ENCLOSURES TO INCLUDE LOCKING PROVISIONS.

E. SEE DRAWING E-601 FOR EQUIPMENT INFORMATION AND ADDITIONAL DETAILS.

KEYED NOTES:

1. SEE DRAWING C-301, DETAIL 1 FOR CONCRETE EQUIPMENT PAD DETAILS.
2. PROPERLY LABEL TRANSFORMER WITH SOURCE SWITCH LOCATION.

TABLE 1

CONDUIT AND CIRCUIT ASSIGNMENT

	1	4"C	3#2AWG, 1#6G (15kV)	9	1-1/2"C	6-1/C #12AWG, 1/C #12G, 8-1/C #12AWG, 1/C #12G
	2	2"C	4#1/0AWG, 1#6G	10	1 1/4"C	3#4AWG, 1#8G
	3	1 1/4"C	14-1/C #14AWG	11	1-1/4"C	6-1/C #12AWG, 1/C #12G
	4	1-1/4"C	3#4AWG, 1#8G	12	3/4"C	2#12AWG, 1#12G
SAME VFD CKT + A/C UNIT	5	1"C	2#8AWG, 1#10G	13	3/4"C	2#12AWG, 1#12G
SAME LOAD CENTER CKT	6	1-1/4"C	3#4AWG,1#8G, 2#12AWG,1#12G	14	3/4"C	2#12AWG, 1#12G
	7	1"C	VFD ETHERNET CABLE	15	1"C	FIBER OPTIC CABLE
	8	1"C	2#8AWG, 1#10G			

NOTE: USE RGS CONDUIT ABOVE GROUND AND IN WELL VAULT, AND PVC CONDUIT BELOW GRADE.

1 ELECTRICAL EQUIPMENT RACK ELEVATION
3/4" = 1'-0"

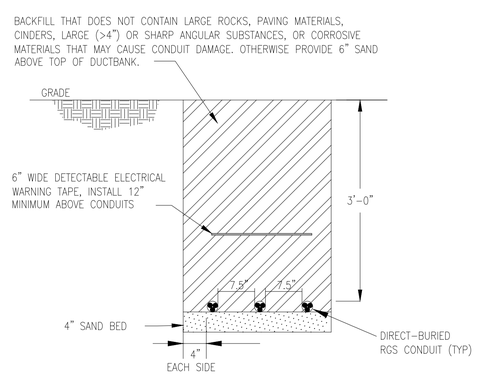

DISTANCES & CLEARANCES ARE MINIMUM REQUIREMENTS

2 DIRECT-BURY CONDUIT SECTION
NONE

COA PROJECT NO: 586082

ANTHONY DAVID DURAN
NEW MEXICO
24181
PROFESSIONAL ENGINEER
6/28/17

NO.	REVISION DESCRIPTION	DATE	BY
5			
4			
3			
2			
1			

KIRTLAND AIR FORCE BASE BULK FUELS FACILITY
KAFB-106239 CONVEYANCE LINE

TRANSFORMER & EQUIPMENT RACK DETAIL

SMITH ENGINEERING COMPANY
2201 SAN PEDRO NE BLDG 4, SUITE 200
ALBUQUERQUE, NM 87110
EEA CONSULTING ENGINEERS

JOB NO: 116112
DATE: JUNE 9, 2017
SHEET NO: E-501 25 of 27

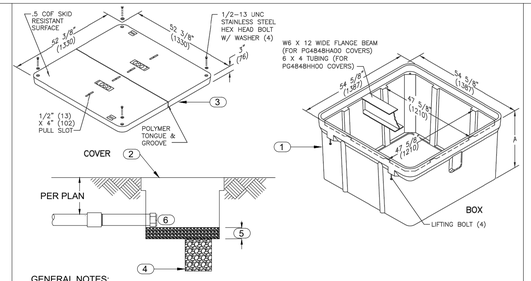

GENERAL NOTES:
1. PROVIDE IN GRADE PULL BOXES WERE SPECIFIED AND AS REQUIRED BY CODE AND SITE CONDITIONS.
2. CONTRACTOR TO FIELD DETERMINE REQUIRED DEPTH OF BOX.
3. PROVIDE TRAFFIC RATED BOX WHERE INSTALLED IN OR ADJACENT TO ROADWAYS.

KEYED NOTES:
1. PROVIDE FIBERGLASS-REINFORCED POLYMER CONCRETE BOX WITH BOLT-DOWN COVER. (HUBBELL QUAZITE P/N PG4848BA48 ANSI TIER 22)
2. INSTALL WITH LID FLUSH WITH FINISHED GRADE. WHERE INSTALLED IN PAVING, SHIM TO BRING FLUSH WITH PAVING AND GROUT AS REQUIRED TO REMOVE ANY LIP PER ADA REQUIREMENTS.
3. HEAVY DUTY SKID RESISTANT COVER. PROVIDE HIGH VOLTAGE WARNING LABEL "12470V DANGER, 'ALUMINUM CONDUCTORS', NO COPPER INSTALLED".
4. FOR ALL BOXES INSTALLED AT LOW POINTS AND IN FLAT AREAS SUBJECT TO WATER RETENTION, PROVIDE 12" DIA. X 12" D GRAVEL FILLED SUMP BELOW BOX
5. PROVIDE 4" LAYER OF PEA GRAVEL IN BOTTOM OF BOX.
6. STUB ALL CONDUITS 6" MIN INTO PULL BOX. PROVIDE BUSHING ON CONDUIT ENDS.

1 NTS — 4 EXTERIOR GRADE MOUNTED PULL BOX

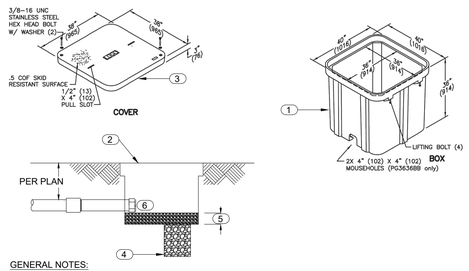

GENERAL NOTES:
1. PROVIDE IN GRADE PULL BOXES WERE SPECIFIED AND AS REQUIRED BY CODE AND SITE CONDITIONS.
2. CONTRACTOR TO FIELD DETERMINE REQUIRED DEPTH OF BOX.
3. PROVIDE TRAFFIC RATED BOX WHERE INSTALLED IN OR ADJACENT TO ROADWAYS.

KEYED NOTES:
1. PROVIDE FIBERGLASS-REINFORCED POLYMER CONCRETE BOX WITH BOLT-DOWN COVER. (HUBBELL QUAZITE P/N PG3636BA36 ANSI TIER 22)
2. INSTALL WITH LID FLUSH WITH FINISHED GRADE. WHERE INSTALLED IN PAVING, SHIM TO BRING FLUSH WITH PAVING AND GROUT AS REQUIRED TO REMOVE ANY LIP PER ADA REQUIREMENTS.
3. HEAVY DUTY SKID RESISTANT COVER. PROVIDE HIGH VOLTAGE WARNING LABEL "12470V DANGER, 'ALUMINUM CONDUCTORS', NO COPPER INSTALLED".
4. FOR ALL BOXES INSTALLED AT LOW POINTS AND IN FLAT AREAS SUBJECT TO WATER RETENTION, PROVIDE 12" DIA. X 12" D GRAVEL FILLED SUMP BELOW BOX
5. PROVIDE 4" LAYER OF PEA GRAVEL IN BOTTOM OF BOX.
6. STUB UP ALL CONDUITS 6" MIN INTO PULL BOX. PROVIDE BUSHING ON CONDUIT ENDS.

2 NTS — 5 EXTERIOR GRADE MOUNTED PULL BOX NTS

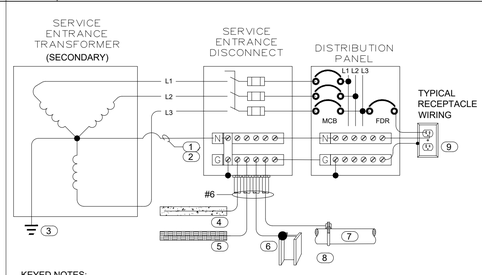

KEYED NOTES:
1. REFER TO ONE LINE AND PANEL SCHEDULES FOR CONDUCTOR SIZING NOT SHOWN ON GROUNDING SCHEMATIC.
2. UNO, ALL EQUIPMENT GROUNDING CONDUCTORS SHALL BE COPPER TYPE THHN/THWN.
3. TRANSFORMER GROUNDING PER NEC.
4. 20' OF BARE COPPER CONDUCTOR ENCASED IN 2" MIN. OF CONCRETE FOUNDATION IN DIRECT CONTACT WITH EARTH.
5. 20' OF BARE COPPER CONDUCTOR BURIED IN DIRECT CONTACT WITH EARTH AT 2' BELOW GRADE
6. CAD WELD CONNECTION TO BUILDING STEEL.
7. BONDING STRAP AT METAL COLD WATER AND GAS PIPING.
8. PROVIDE COPPER CLAD STEEL GROUND RODS AS REQUIRED TO ACHIEVE SPECIFIED GROUND RESISTANCE MEASURED AT THE SERVICE GROUND BUS. CAD-WELD TO BARE CU CABLE BURIED AT 24"
9. EQUIPMENT GROUNDING CONDUCTOR WITH ALL BRANCH CIRCUITS.

3 NTS — 6 GROUNDING SCHEMATIC NTS

GENERAL NOTES:
1. PRIMARY FUSED SECTIONALIZER EXISTING AND NOT PART OF THIS PROJECT.
2. SEE TABLE 1 ON SHEET E-501 FOR CONDUIT SIZES AND DESIGN INFORMATION.
3. COORDINATE WITH HORIZONTAL DIRECTION DRILLING CONTRACTOR FOR CONDUIT DEPTHS.
4. COORDINATE WITH CIVIL DRAWINGS AND CONTRACTOR FOR ALL UNDERGROUND WORK.

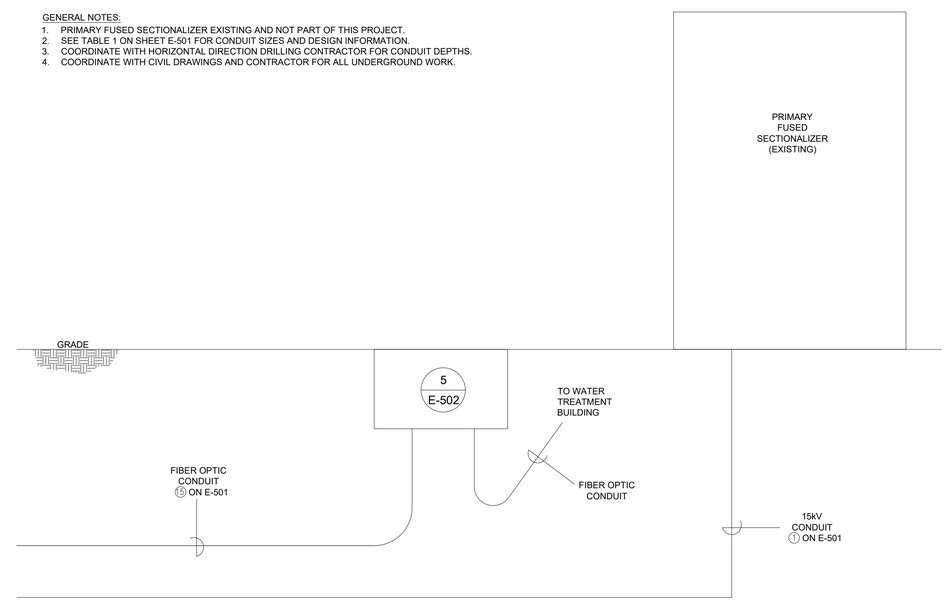

7 — 10 NTS

9 NTS — SIMPLIFIED SECTION SHOWING DESIGN INTENT AT FUSED SECTIONALIZER

COA PROJECT NO: 586082

ANTHONY DAVID DURAN
NEW MEXICO
24181
PROFESSIONAL ENGINEER
6/28/17

NO.	REVISION DESCRIPTION	DATE	BY
1	ADD		
2			
3			
4			
5			

KIRTLAND AIR FORCE BASE BULK FUELS FACILITY
KAFB-106239 CONVEYANCE LINE

DETAILS

SMITH ENGINEERING COMPANY
2201 SAN PEDRO NE BLDG 4, SUITE 200
ALBUQUERQUE, NM 87110
EEA CONSULTING ENGINEERS

JOB NO: 116112
DATE: JUNE 9, 2017
SHEET NO: E-502 26 of 27

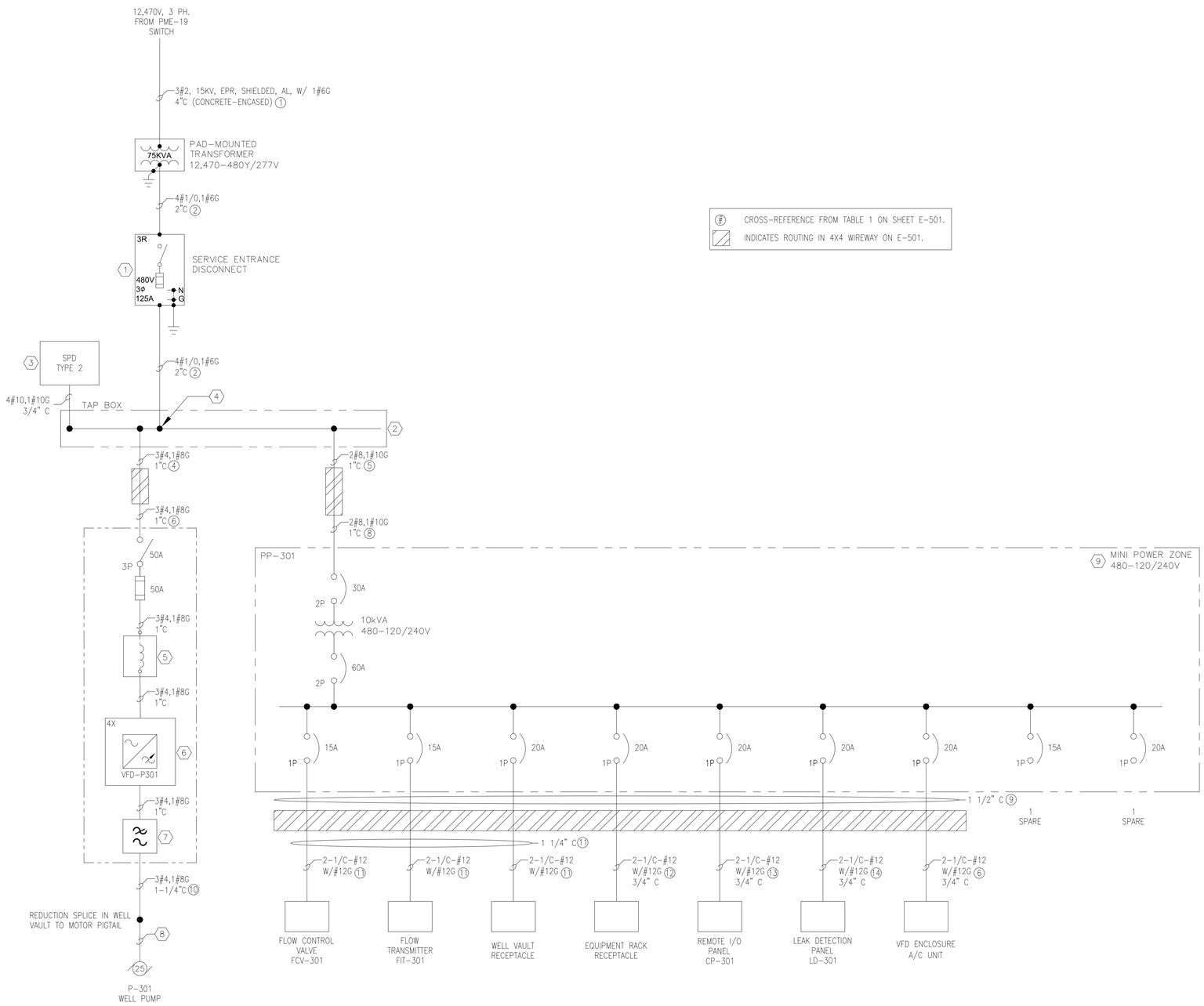

#	CROSS-REFERENCE FROM TABLE 1 ON SHEET E-501.
	INDICATES ROUTING IN 4X4 WIREWAY ON E-501.

GENERAL NOTES:

A. SEE DRAWING E-000 FOR SYMBOLS & LEGENDS.

B. SEE DRAWING E-001 FOR GENERAL NOTES AND SPECIFICATIONS.

C. SEE DRAWING E-501 FOR EQUIPMENT ARRANGEMENT AND CIRCUIT ASSIGNMENT.

D. CONTRACTOR TO FURNISH AND INSTALL ALL EQUIPMENT ON THIS DRAWING, UNO.

KEYED NOTES:

1. DISCONNECT TO BE A SERVICE-ENTRANCE RATED, NEMA 3R, SQUARE D CAT # H364NRB OR APPROVED EQUAL.
2. TAP BOX TO BE A NEMA 3R HOFFMAN HINGE-COVER ENCLOSURE, CAT # A20R166HCR OR APPROVED EQUAL. FOR TAP BOX SEE DETAIL 1, DRAWING E-501.
3. TYPE 2 SURGE PROTECTION DEVICE (SPD) TO BE MCG SURGEFREE, CAT # 300LS-277Y-SS OR APPROVED EQUAL.
4. MULTI-TAP CONNECTOR IN TAP BOX TO BE PANDUIT, CAT # PCSBMT2/0-4-2Y OR APPROVED EQUAL.
5. ALLEN-BRADLEY LINE REACTOR SIZED FOR TEMPERATURE AND ELEVATION, CAT # 1321-3R45-B OR APPROVED EQUAL.
6. PUMP VFD TO BE ALLEN-BRADLEY POWERFLEX 700 AC DRIVE SUPPLIED IN A NEMA 4X ENCLOSURE.
7. OUTPUT FILTER TO BE SCHAFFNER DV/DT FILTER SIZED FOR TEMPERATURE AND ELEVATION, CAT # FN5060-45-99 OR APPROVED EQUAL.
8. MOTOR PIGTAIL CONDUCTORS FURNISHED BY VENDOR. FIELD SPLICE CONDUCTORS TO PUMP MOTOR CABLE UTILIZING IN-LINE SPLICE KIT WITH PVC HEAT SHRINK.
9. MINI POWER-ZONE UNIT SUBSTATION, CAT # MPZB10S40F25K OR APPROVED EQUAL.

ANTHONY DAVID DURAN
NEW MEXICO
24181
PROFESSIONAL ENGINEER
6/28/17

NO.	REVISION DESCRIPTION	DATE	BY
1			
2			
3			
4			
5			

KIRTLAND AIR FORCE BASE BULK FUELS FACILITY
KAFB-106239 CONVEYANCE LINE

ONE-LINE DIAGRAM

SMITH ENGINEERING COMPANY
2201 SAN PEDRO NE BLDG 4, SUITE 200
ALBUQUERQUE, NM 87110
EEA CONSULTING ENGINEERS

JOB NO: 116112
DATE: JUNE 9, 2017
SHEET NO: E-601 27 of 27

COA PROJECT NO: 586082

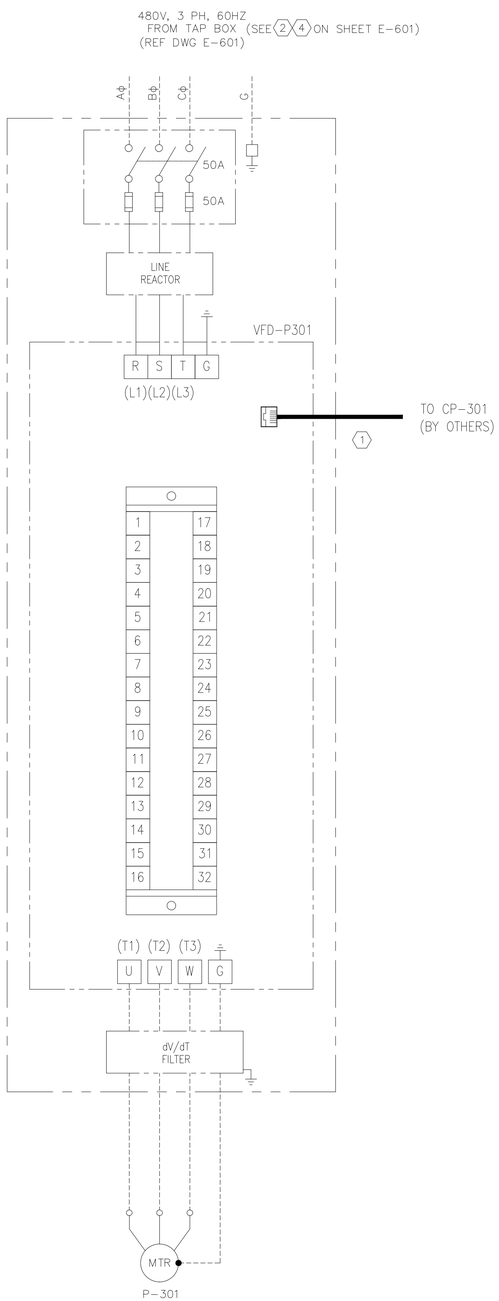

VFD SCHEMATIC DIAGRAM

GENERAL NOTES:

A. SEE DRAWING E-000 FOR SYMBOLS & LEGENDS.

B. SEE DRAWING E-001 FOR GENERAL NOTES AND SPECIFICATIONS.

C. SEE DRAWING E-501 FOR EQUIPMENT ARRANGEMENT AND CIRCUIT ASSIGNMENT.

KEYED NOTES:

1. CONNECTION BETWEEN THE REMOTE I/O PANEL (CP-301) AND VFD BY OTHERS. CP-301 SCHEMATIC WIRING DIAGRAM AND DETAILS BY OTHERS.

COA PROJECT NO: 586082

ANTHONY DAVID DURAN
NEW MEXICO
24181
PROFESSIONAL ENGINEER
6/28/17

NO.	REVISION DESCRIPTION	DATE	BY
5			
4			
3			
2			
1			

KIRTLAND AIR FORCE BASE BULK FUELS FACILITY
KAFB-106239 CONVEYANCE LINE

VFD WIRING DIAGRAM

SMITH ENGINEERING COMPANY
2201 SAN PEDRO NE BLDG 4, SUITE 200
ALBUQUERQUE, NM 87110
EEA CONSULTING ENGINEERS

JOB NO: 116112
DATE: JUNE 9, 2017
SHEET: E-701
NO: 28

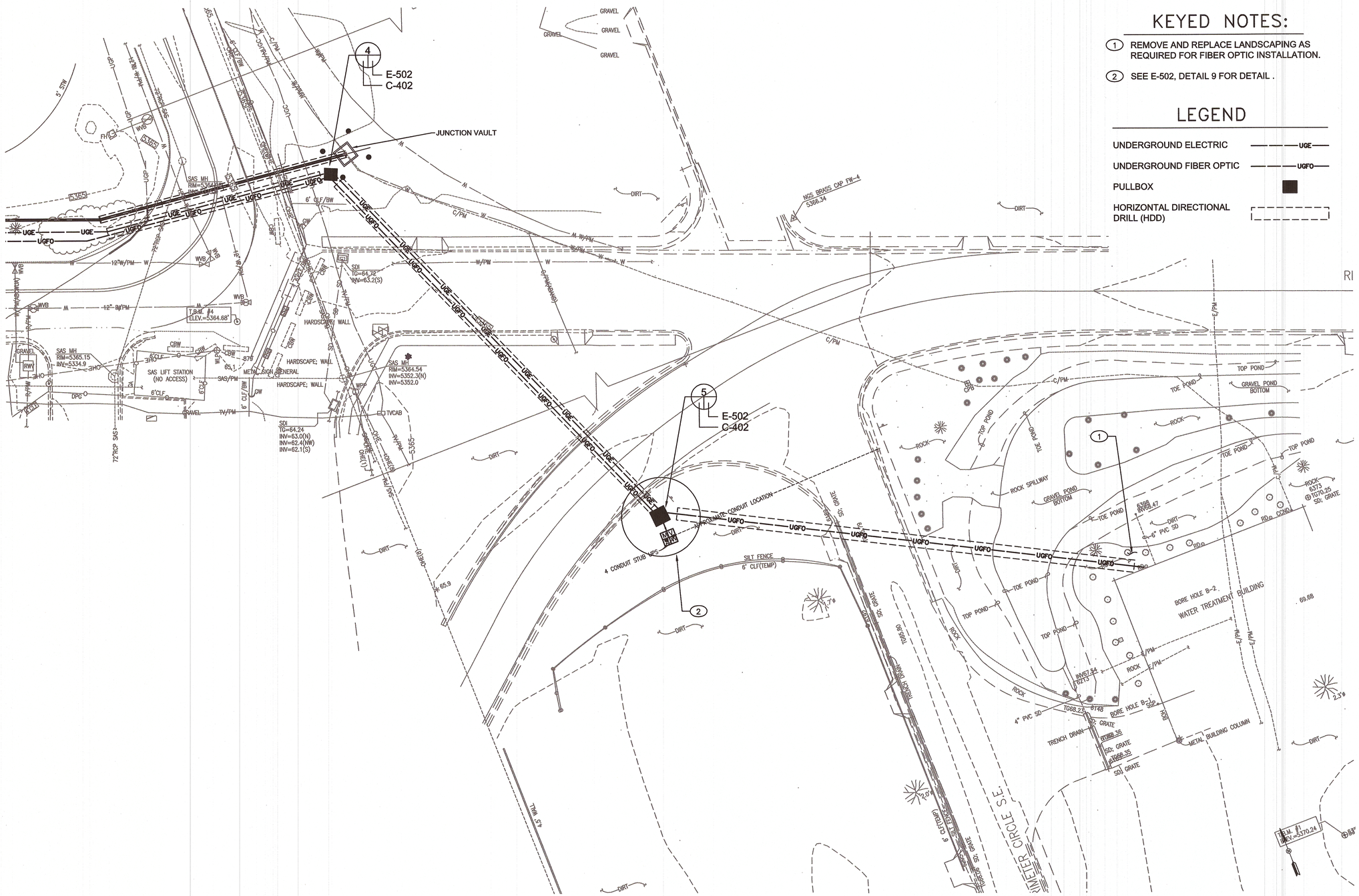

KEYED NOTES:

1. REMOVE AND REPLACE LANDSCAPING AS REQUIRED FOR FIBER OPTIC INSTALLATION.
2. SEE E-502, DETAIL 9 FOR DETAIL .

LEGEND

UNDERGROUND ELECTRIC	UGE
UNDERGROUND FIBER OPTIC	UGFO
PULLBOX	■
HORIZONTAL DIRECTIONAL DRILL (HDD)	- - - -

ON-BASE ELECTRICAL SITE PLAN

SCALE: 1" = 20'

COA PROJECT NO: 586082

Design Review Committee	City Engineer Approval	Last Design Update	No. / Day / Yr.	No. / Day / Yr.

GEORGE NEMETH
NEW MEXICO
12284
REGISTERED PROFESSIONAL ENGINEER
6-28-17

NO.	REVISION DESCRIPTION	DATE	BY
5			
4			
3			
2			
1			

Name
Location

KIRTLAND AIR FORCE BASE
BULK FUELS FACILITY
KAFB - 106239 CONVEYANCE LINE

ON-BASE ELECTRICAL SITE PLAN

SMITH ENGINEERING COMPANY
2201 SAN PEDRO NE BLDG 4, SUITE 200
ALBUQUERQUE, NM 87110

JOB NO: 116112
DATE: JUNE 8, 2017
SHEET NO: C-402 / 29

Q:\SEC-----PROJECTS\116112 KAFB Groundwater Reclam Pipeline\ENGINEERING\CADD\PLANSET\C-402 ON BASE ELECTRICAL SITE PLAN.dwg Jul 05, 2017 - 8:12am Saved By: jerfrep

GENERAL STRUCTURAL NOTES

APPLY UNLESS NOTED ON STRUCTURAL DRAWINGS. IN CASE OF CONFLICT BETWEEN GSN, DETAILS AND PLANS, THE GREATER REQUIREMENTS GOVERN.

CODE:

COMPLY WITH 2015 INTERNATIONAL BUILDING CODE.

LIVE LOADS: AASHTO H-20

FOUNDATIONS:

PRESUMED SOIL BEARING PRESSURE = 1500 PSF.

FOOTINGS SHALL BEAR ON COMPACTED SUB-GRADE. SOIL BENEATH FOOTINGS SHALL BE SCARIFIED TO A DEPTH OF 12 INCHES, MOISTURE CONDITIONED TO OPTIMUM MOISTURE CONTENT OR ABOVE AND COMPACTED TO A MINIMUM OF 95% MAXIMUM DRY DENSITY AS DETERMINED IN ACCORDANCE WITH ASTM-D-698.

BACKFILL SHALL BE PLACED IN 8" LIFTS AND COMPACTED TO 95% MAXIMUM DENSITY.

CONCRETE:

SHALL MEET ALL THE REQUIREMENTS OF THE CURRENT ISSUE OF THE ACI MANUAL OF CONCRETE PRACTICE, WITH TYPE I-II CEMENT. MINIMUM 28 DAY STRENGTH, 4000 PSI.

MAXIMUM SLUMP:.....5"

AIR CONTENT:..... ...4% TO 6%

FINISHES TO BE PRE-CAST MANUFACTURER'S STANDARD.

REINFORCING:

LATEST ACI CODE AND DETAILING MANUAL APPLY. ALL REINFORCING BARS DEFORMED.

ALL REINFORCING SHALL BE ASTM A-615 GRADE 60.

CLEAR CONCRETE COVER TO REINFORCING PER ACI.

FOR TYPICAL BAR BENDS, SEE DETAIL 1/S-201.

PROVIDE SHOP DRAWINGS AND FABRICATE AFTER THE ENGINEERS REVIEW.

REBAR SPACING GIVEN IS MAXIMUM ON CENTER AND ALL REBAR IS CONTINUOUS UNLESS OTHERWISE NOTED.

STRUCTURAL STEEL:

ALL STEEL:.....ASTM A-36

WELDING:

ALL CONSTRUCTION AND TESTING PER AMERICAN WELDING SOCIETY CODES AND RECOMMENDATIONS. ALL WELDING SHALL BE BY WELDERS HOLDING CURRENT VALID CERTIFICATES AND HAVING CURRENT EXPERIENCE IN TYPE OF WELD CALLED FOR. WELDING RODS TO BE LOW HYDROGEN TYPE, E70 FOR STRUCTURAL STEEL AND E60 FOR METAL DECK AND LIGHT GAUGE STEEL STUDS.

ALL WELDING OF STRUCTURAL STEEL SHALL CONFORM TO THE "STRUCTURAL WELDING CODES-STEEL" AWS D1.1, CURRENT EDITION.

WELDS INDICATED MAY BE MADE IN SHOP OR FIELD WITH APPROVAL.

SUPPLEMENTARY NOTES:

WORK SHALL BE AS PER KIRTLAND AFB STANDARD SPECIFICATIONS, UNLESS NOTED OTHERWISE.

THE STRUCTURAL ENGINEER SHALL NOT HAVE CONTROL OR CHARGE OF, AND SHALL NOT BE RESPONSIBLE FOR, CONSTRUCTION MEANS, METHODS, TECHNIQUES, SEQUENCES OR PROCEDURES, FOR SAFETY PRECAUTIONS AND PROGRAMS IN CONNECTION WITH THE WORK, FOR THE ACTS OR OMISSIONS OF THE CONTRACTOR, SUBCONTRACTORS OR ANY OTHER PERSONS PERFORMING ANY OF THE WORK IN ACCORDANCE WITH THE CONTRACT DOCUMENTS.

SEE CIVIL DRAWINGS FOR SLOPE OF STRUCTURE. VAULT IS PLACED SLIGHTLY OUT OF LEVEL FOR DRAINAGE.

UNLESS OTHERWISE NOTED, DETAILS ON STRUCTURAL DRAWINGS ARE TYPICAL AS INDICATED BY CUTS, REFERENCES OR TITLES.

VERIFY ALL DIMENSIONS WITH CIVIL DRAWINGS.

CONTRACTOR SHALL VERIFY IN FIELD ALL EXISTING CONDITIONS SHOWN ON DRAWINGS.

GROUT AT DOOR FRAMES SHALL BE QUIKRETE NON-SHRINK PRECISION GROUT OR APPROVED EQUAL. INSTALL PER MANUFACTURERS RECOMMENDATIONS.

SPECIAL INSPECTIONS:

PER SECTION 1704 OF THE INTERNATIONAL BUILDING CODE, SPECIAL INSPECTION IS REQUIRED FOR THE FOLLOWING ITEMS:

1. CONCRETE AND REINFORCEMENT, UNLESS FABRICATOR IS APPROVED TO PERFORM WORK WITHOUT SPECIAL INSPECTIONS.
2. STRUCTURAL WELDING: FIELD WELDING AND WELDING NOT DONE IN AN APPROVED FABRICATORS SHOP.
3. EARTHWORK.

LEGEND:

ABBREVIATIONS

CONC. = CONCRETE	G.S.N. = GENERAL STRUCTURAL NOTES
CONT. = CONTINUOUS	P.C. = PRE-CAST CONCRETE
EXIST. = EXISTING	U.N.O. = UNLESS NOTED OTHERWISE

INDICATES PRE-CAST CONCRETE WALL.

COA PROJECT NO: 586082

Design Review Committee	City Engineer Approval	Last Design Update	Mo. / Day / Yr.	Mo. / Day / Yr.

CHARLES W. STUBBS
NEW MEXICO
11704
PROFESSIONAL ENGINEER
06/22/17

NO.	REVISION DESCRIPTION	DATE	BY
5			
4			
3			
2			
1			

KIRTLAND AIR FORCE BASE
BULK FUELS FACILITY
KAFB - 106239 CONVEYANCE LINE

STRUCTURAL
GENERAL STRUCTURAL NOTES

SMITH ENGINEERING COMPANY
2201 SAN PEDRO NE BLDG 4, SUITE 200
ALBUQUERQUE, NM 87110

JOB NO: 116112
DATE: JUNE 22, 2017
SHEET: S-001 NO: 30

Q:\SEC - - PROJECTS\116112 KAFB Groundwater Recharm Pipeline\STRUCTURAL DESIGN\DRAWINGS\Sheets\116112-KAFB_S-001.dwg Jun 22, 2017 - 9:01am Saved By: rchorlam

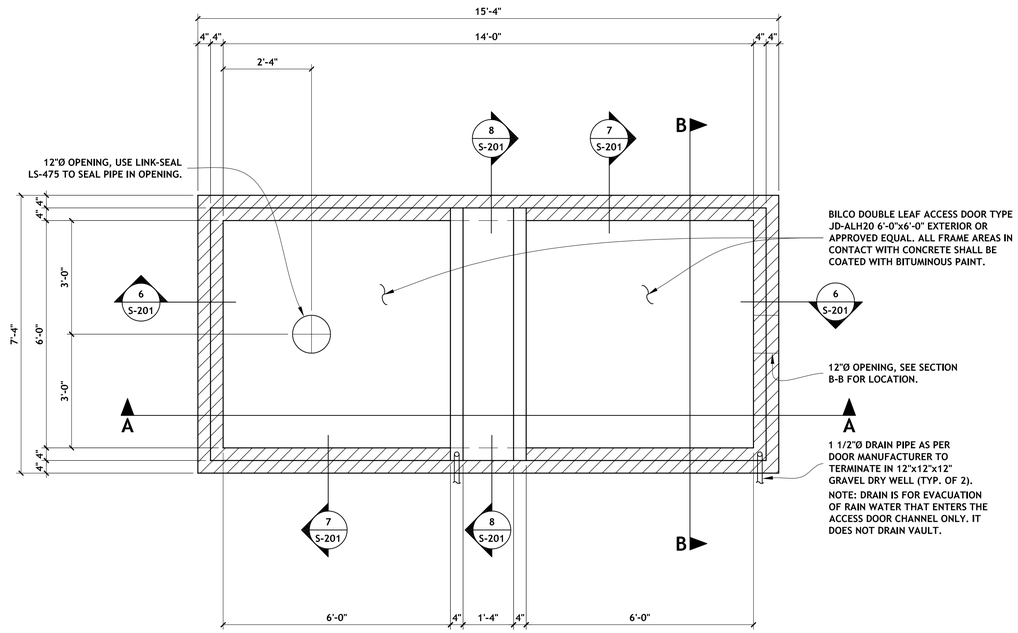

PRE-CAST CONCRETE VAULT PLAN

SCALE: 1/2"=1'-0"

NORTH

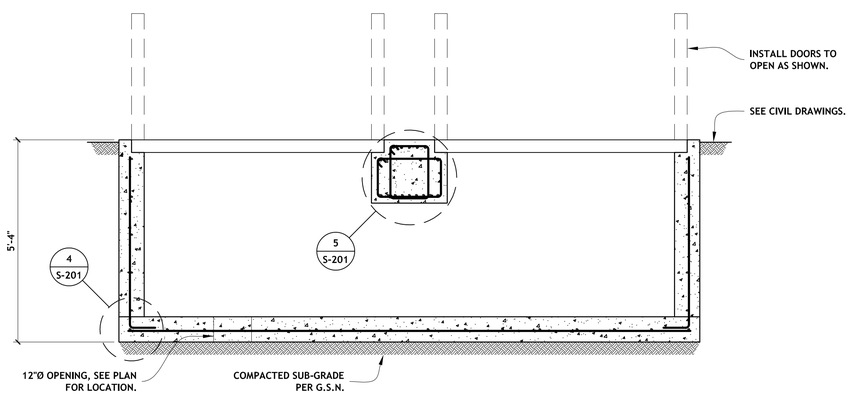

SECTION A-A

SCALE: 1/2"=1'-0"

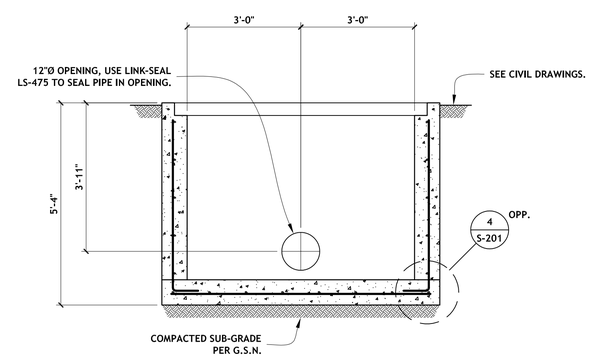

SECTION B-B

SCALE: 1/2"=1'-0"

PLAN NOTES:

1. VERIFY ALL DIMENSIONS SHOWN WITH CIVIL DRAWINGS.
2. FOR FOOTING EXCAVATION AND SOIL PREPARATION REQUIREMENTS SEE G.S.N.
3. ALL SLAB OPENINGS ARE NOT NECESSARILY SHOWN. COORDINATE OPENINGS WITH PLUMBING, MECH'L AND CIVIL DRAWINGS.
4. INDICATES 8" PRE-CAST CONCRETE WALLS. SEE SECTIONS AND DETAILS REINFORCING.
5. ALL RE-ENTRANT CORNERS TO HAVE #4x3'-0" AT 45° TO MAIN REINFORCING.
6. MINOR CONDUIT OPENINGS (≤2"Ø) MAY BE CORED IN THE FIELD AS REQUIRED. FOR OPENINGS >2"Ø AND NOT SHOWN ON PLANS, CONTACT ENGINEER PRIOR TO CORING.

COA PROJECT NO: 586082

Design Review Committee	City Engineer Approval	Last Design Update	Mo. / Day / Yr.	Mo. / Day / Yr.

CHARLES W. STUBBS NEW MEXICO 11704 PROFESSIONAL ENGINEER 06/22/17

NO.	REVISION DESCRIPTION	DATE	BY
5			
4			
3			
2			
1			

KIRTLAND AIR FORCE BASE
BULK FUELS FACILITY
KAFB - 106239 CONVEYANCE LINE

STRUCTURAL
PLAN AND SECTION

SMITH ENGINEERING COMPANY
2201 SAN PEDRO NE BLDG 4, SUITE 200
ALBUQUERQUE, NM 87110

JOB NO: 116112
DATE: JUNE 22, 2017
SHEET NO: S-101 31

Q:\SEC---PROJECTS\116112 KAFB Groundwater Recharm Pipeline\STRUCTURAL DESIGN\DRAWINGS\Sheets\116112-KAFB_S-101.dwg Jul 10, 2017 - 11:08am Saved By: richardm

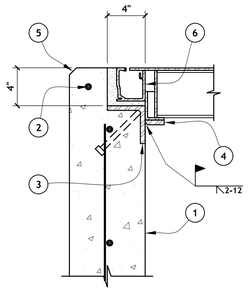

1. 8" PRE-CAST CONCRETE WALL WITH #5 AT 12" O.C. EACH WAY CENTERED IN WALL.
2. (1) #5 CONT.
3. CONT. GALVANIZED EMBED ANGLE 4x4x1/4 WITH 1/2"Øx6" GALVANIZED HEADED STUDS AT 12" O.C.
4. CONT. GALVANIZED PLATE 3/8x2 TIGHT TO DOOR FRAME.
5. 3/4" CHAMFER AT ALL EXPOSED EDGES.
6. PRE- MANUFACTURED ALUMINUM DOOR FRAME SOLID GROUTED IN PLACE.

NOTE:
ALL FIELD WELDS SHALL BE PAINTED WITH COLD GALVANIZING PAINT.

7 CONCRETE WALL AT DOOR FRAME

5-S-201

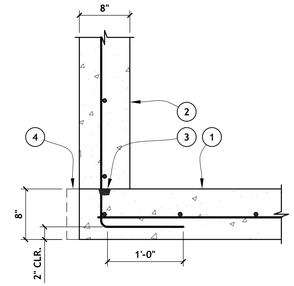

1. 8" CONCRETE VAULT SLAB WITH #5 BARS AT 12" O.C. EACH WAY CENTERED IN SLAB.
2. 8" CONCRETE VAULT WALL WITH #5 BARS AT 12" O.C. EACH WAY CENTERED IN WALL.
3. PROVIDE SF302 SYNKO-FLEX WATER STOP OR APPROVED EQUAL AT ALL CONCRETE JOINTS.
4. PRE-CAST MANUFACTURER MAY EXTEND SLAB AS REQUIRED.

NOTES:
A. SYNKO-FLEX WATER STOP NOT REQUIRED IF SLAB AND WALLS ARE CAST MONOLITHICALLY.
B. PRE-CAST MANUFACTURER MAY SUBMIT ALTERNATE WALL/FLOOR JOINT FOR APPROVAL.

4 VAULT WALL AT SLAB

2-S-201

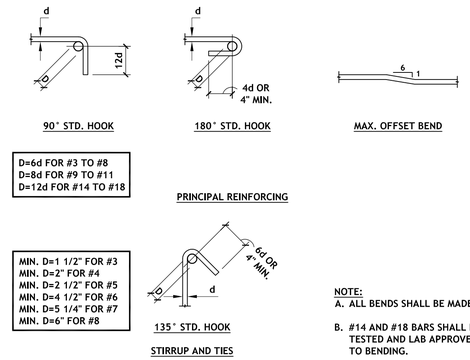

NOTE:
A. ALL BENDS SHALL BE MADE COLD.
B. #14 AND #18 BARS SHALL BE BEND TESTED AND LAB APPROVED PRIOR TO BENDING.

1 TYPICAL BAR BENDS

S1

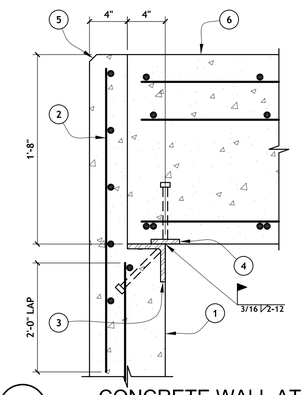

1. 8" PRE-CAST CONCRETE WALL WITH #5 AT 12" O.C. EACH WAY CENTERED IN WALL.
2. #5 AT 6" O.C. EACH WAY CENTERED IN WALL AT CONCRETE BEAM BLOCKOUT.
3. CONT. GALVANIZED ANGLE 4x4x1/4 WITH 1/2"Øx6" GALVANIZED HEADED ANCHORS AT 12" O.C.
4. CONT. GALVANIZED EMBED PLATE 1/4x3 WITH 1/2"x6" GALVANIZED HEADED ANCHORS AT 24" O.C.
5. 3/4" CHAMFER AT ALL EXPOSED EDGES.
6. PRE-CAST CONCRETE BEAM, SEE DETAIL 5/S-201 FOR ADDITIONAL INFORMATION.

NOTE:
ALL FIELD WELDS SHALL BE PAINTED WITH COLD GALVANIZING PAINT.

8 CONCRETE WALL AT PRE-CAST BEAM

6-S-201

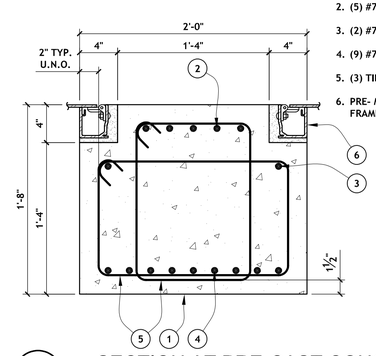

1. PRE-CAST CONCRETE BEAM.
2. (5) #7 CONT.
3. (2) #7 CONT.
4. (9) #7 CONT.
5. (3) TIES AT 4 1/2" O.C.
6. PRE- MANUFACTURED ALUMINUM DOOR FRAME SOLID GROUTED IN PLACE.

5 SECTION AT PRE-CAST CONCRETE BEAM

3-S-201

1. TABULATED VALUES ARE BASED ON GRADE 60 UNCOATED REINFORCING BARS, NORMAL WEIGHT CONCRETE AND MIN. COVER OF d_b WITH MIN. CLEAR SPACING OF $2d_b$.
2. TENSION LAP SPLICES ARE CALCULATED PER ACI 318 SECTIONS 12.2 AND 12.15.
3. TOP BARS ARE HORIZONTAL BARS WITH MORE THAN 12 INCHES OF CONCRETE CAST BELOW THE BARS.
4. FOR GRADE 40 REINFORCING BARS MULTIPLY THE TABULATED VALUES BY 0.67 (12" MIN. LAP).
5. FOR LIGHT WEIGHT CONCRETE MULTIPLY THE TABULATED VALUES BY 1.3.
6. ALL LAP SPLICES ARE CLASS B SPLICES PER ACI 318 SECTION 12.15.

LAP SPLICE LENGTHS (IN.)

BAR SIZE	LENGTHS (IN.)					
	3000 PSI		4000 PSI		5000 PSI	
	TOP BARS [3]	OTHER BARS	TOP BARS [3]	OTHER BARS	TOP BARS [3]	OTHER BARS
#3	28	21	24	18	22	17
#4	37	28	32	25	29	22
#5	46	36	40	31	36	28
#6	56	43	48	37	43	33
#7	81	62	70	54	63	48
#8	93	71	80	62	72	55
#9	104	80	90	70	81	62
#10	118	90	102	78	91	70
#11	131	100	113	87	101	78

2 LAP-SPLICE SCHEDULE FOR CONC. REINF'G

C2

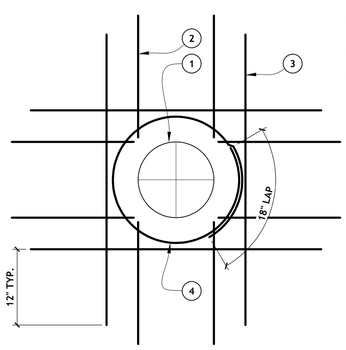

1. LINE OF OPENING IN SLAB/WALL.
2. TYPICAL SLAB/WALL REINFORCING CUT AT OPENING.
3. ADDITIONAL (1) #5, TYP. OF 4.
4. (1) #5 TIE, DIAMETER OF OPENING +8".

9 TYPICAL OPENING IN CONCRETE SLAB/WALL

FN110

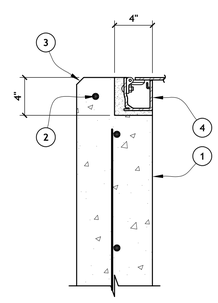

1. 8" PRE-CAST CONCRETE WALL WITH #5 AT 12" O.C. EACH WAY CENTERED IN WALL.
2. (1) #5 CONT.
3. 3/4" CHAMFER AT ALL EXPOSED EDGES.
4. PRE- MANUFACTURED ALUMINUM DOOR FRAME SOLID GROUTED IN PLACE.

6 CONCRETE WALL AT DOOR FRAME

4-S-201

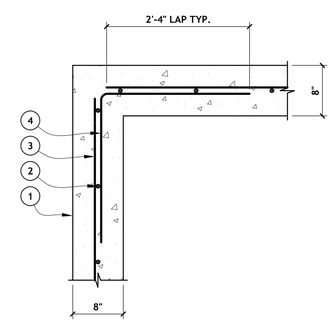

1. CONCRETE WALL, SEE PLAN.
2. VERTICAL REINFORCING, SEE PLAN AND DETAILS FOR SIZE AND SPACING.
3. HORIZONTAL REINFORCING, SEE PLAN AND DETAILS FOR SIZE AND SPACING.
4. PROVIDE CORNER BARS, MATCH HORIZONTAL REINFORCING SIZE AND SPACING.

NOTES:
A. SYNKO-FLEX WATER STOP SHALL BE PROVIDED IF WALLS ARE NOT CAST MONOLITHICALLY.
B. PRE-CAST MANUFACTURER MAY SUBMIT ALTERNATE WALL CORNER JOINT FOR APPROVAL.

3 TYPICAL CORNER BAR DETAIL

1-S-201

COA PROJECT NO: 586082

Design Review Committee	City Engineer Approval	Last Design Update	Mo. / Day / Yr.	Mo. / Day / Yr.

CHARLES W. STUBBS
NEW MEXICO
11704
PROFESSIONAL ENGINEER
06/22/17

NO.	REVISION DESCRIPTION	DATE	BY
5			
4			
3			
2			
1			

KIRTLAND AIR FORCE BASE
BULK FUELS FACILITY
KAFB – 106239 CONVEYANCE LINE

STRUCTURAL DETAILS

SMITH ENGINEERING COMPANY
2201 SAN PEDRO NE BLDG 4, SUITE 200
ALBUQUERQUE, NM 87110

JOB NO: 116112
DATE: JUNE 22, 2017
SHEET: S-201
NO: 32

Q:\SEC---PROJECTS\116112 AAFB Groundwater Recharm Pipeline\STRUCTURAL DESIGN\DRAWINGS\Sheets\116112-AAFB_S-201.dwg Jun 22, 2017 - 9:03am Saved By: richardm